US006618650B1

(12) **United States Patent**
Nakai et al.

(10) **Patent No.: US 6,618,650 B1**
(45) **Date of Patent: Sep. 9, 2003**

(54) **VEHICLE SHARING SYSTEM**

(75) Inventors: **Tomoaki Nakai**, Utsunomiya (JP); **Suguru Asakura**, Utsunomiya (JP); **Shugo Kondo**, Utsunomiya (JP)

(73) Assignee: **Honda Giken Kogyo Kabushiki Kaisha**, Tokyo (JP)

(*) Notice: Subject to any disclaimer, the term of this patent is extended or adjusted under 35 U.S.C. 154(b) by 0 days.

(21) Appl. No.: **09/300,254**

(22) Filed: **Apr. 27, 1999**

(30) **Foreign Application Priority Data**

Apr. 28, 1999 (JP) 10-119415

(51) **Int. Cl.**[7] **G06F 17/60**

(52) **U.S. Cl.** **701/1**; 705/1; 705/13; 701/18; 701/22; 701/23; 701/24; 701/25; 701/26; 701/200; 701/300

(58) **Field of Search** 705/1, 13; 701/1, 701/22, 18, 23, 24, 25, 26, 200, 300

(56) **References Cited**

U.S. PATENT DOCUMENTS

4,901,065	A	*	2/1990	Cerruti	340/756
4,907,159	A	*	3/1990	Mauge et al.	701/117
5,487,002	A	*	1/1996	Diller et al.	701/1
5,696,684	A	*	12/1997	Ueberschaer	701/200
5,999,908	A	*	12/1999	Abelow	705/1
6,161,071	A	*	12/2000	Shuman et al.	701/48
6,173,165	B1	*	1/2001	Ruhl et al.	455/186.1
6,212,474	B1	*	4/2001	Fowler et al.	701/211
6,360,167	B1	*	3/2002	Millington et al.	701/211

FOREIGN PATENT DOCUMENTS

GB	WO 98/49654	*	11/1998	G07B/15/02
JP	8-110998		4/1996	
JP	20001132 A	*	4/2000	G07C/5/00

OTHER PUBLICATIONS

http://www.lhsl.com/automotive/, 'Driving Mobility to the Next Level'.*

'Learnout & Hauspie Technology talks to Radios (Learnout & Hauspie and Alpine Electronics Inc. will develop an alpine car radio with voice–driven navigation)', Oct. 29, 1997, Newsbytes News Network.*

Greenberg, Peter S., 'Rental Car firms Put amenities in Driver's Seat', Sep. 19, 1993, Plain Dealer, Final ed., pp. 4I.*

Carroll, Doug, 'Satellite Service Keeps Filters In Touch', Oct. 2, 1990, USA Today, Final e., pp. 08B.*

U.S. patent Appln. S.N. 09/300,270; filed Apr. 27, 1999; By: Kondo et al Title: Electric Vehicle Sharing System.

* cited by examiner

Primary Examiner—Tariq R. Hafiz
Assistant Examiner—Akiba Robinson-Boyce
(74) *Attorney, Agent, or Firm*—Arent Fox Kintner Plotkin & Kahn, PLLC

(57) **ABSTRACT**

When a user enters a language to be used via a port terminal, a system controller transfers information as to the language to be used to a navigation unit via an antenna and a communication unit which are mounted on a selected electric vehicle, and the navigation system displays information in the language to be used.

6 Claims, 11 Drawing Sheets

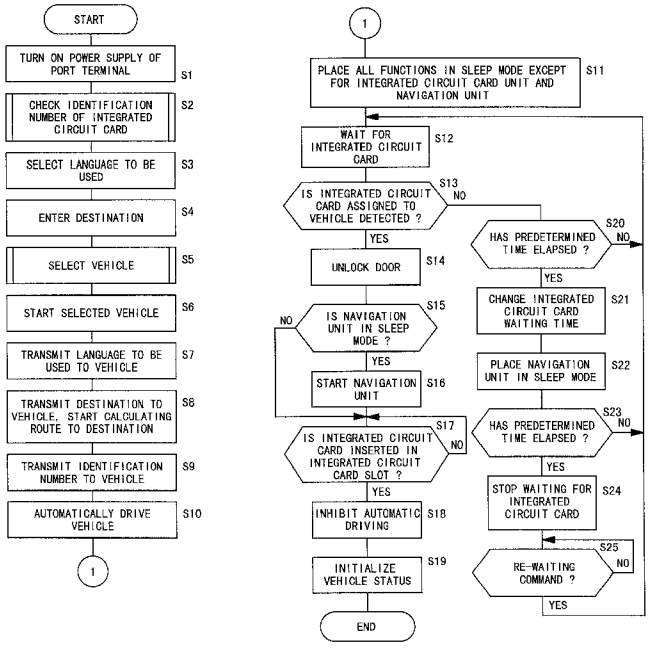

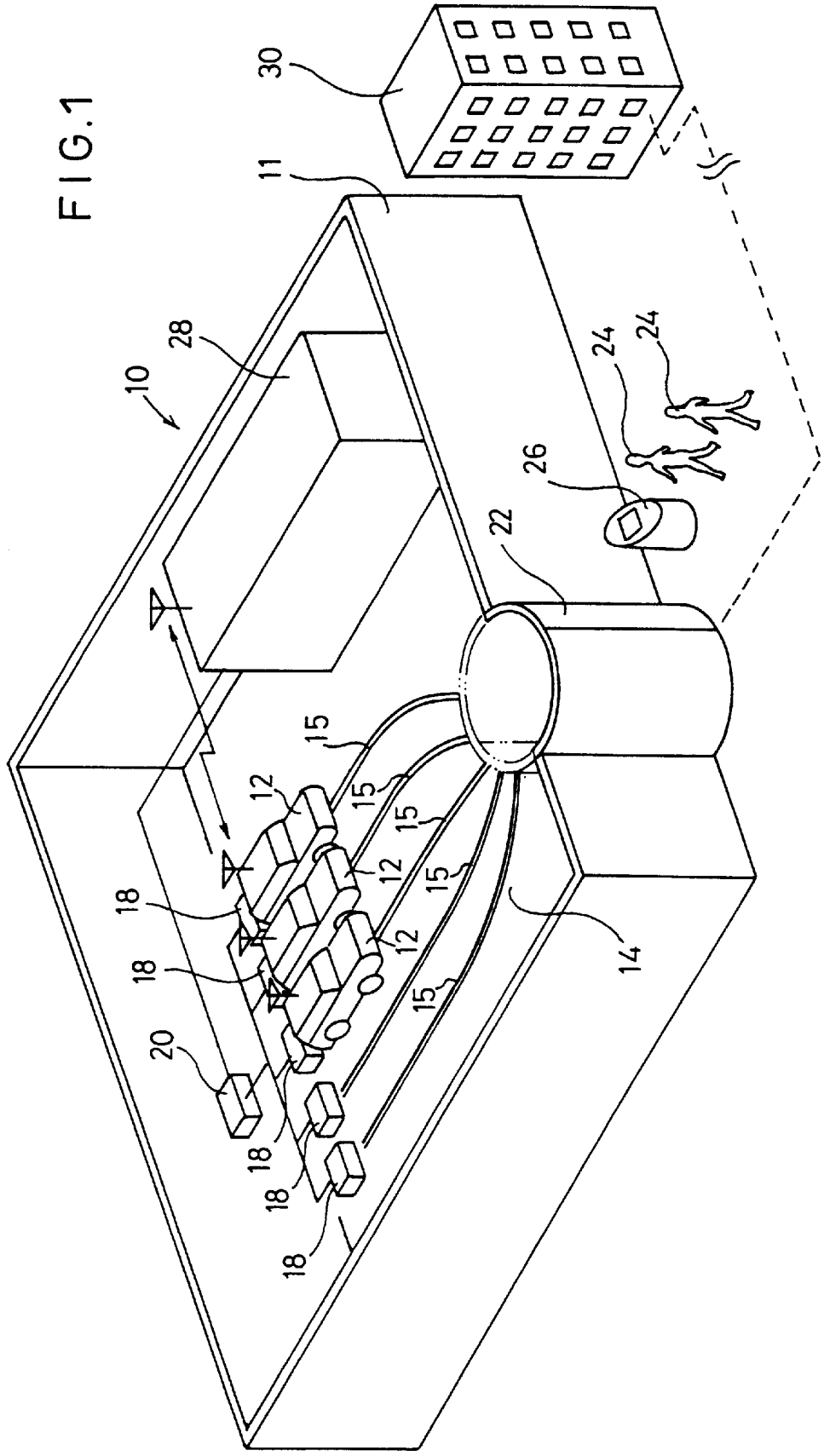
FIG.1
10
11
12
14
15
18
20
22
24
26
28
30

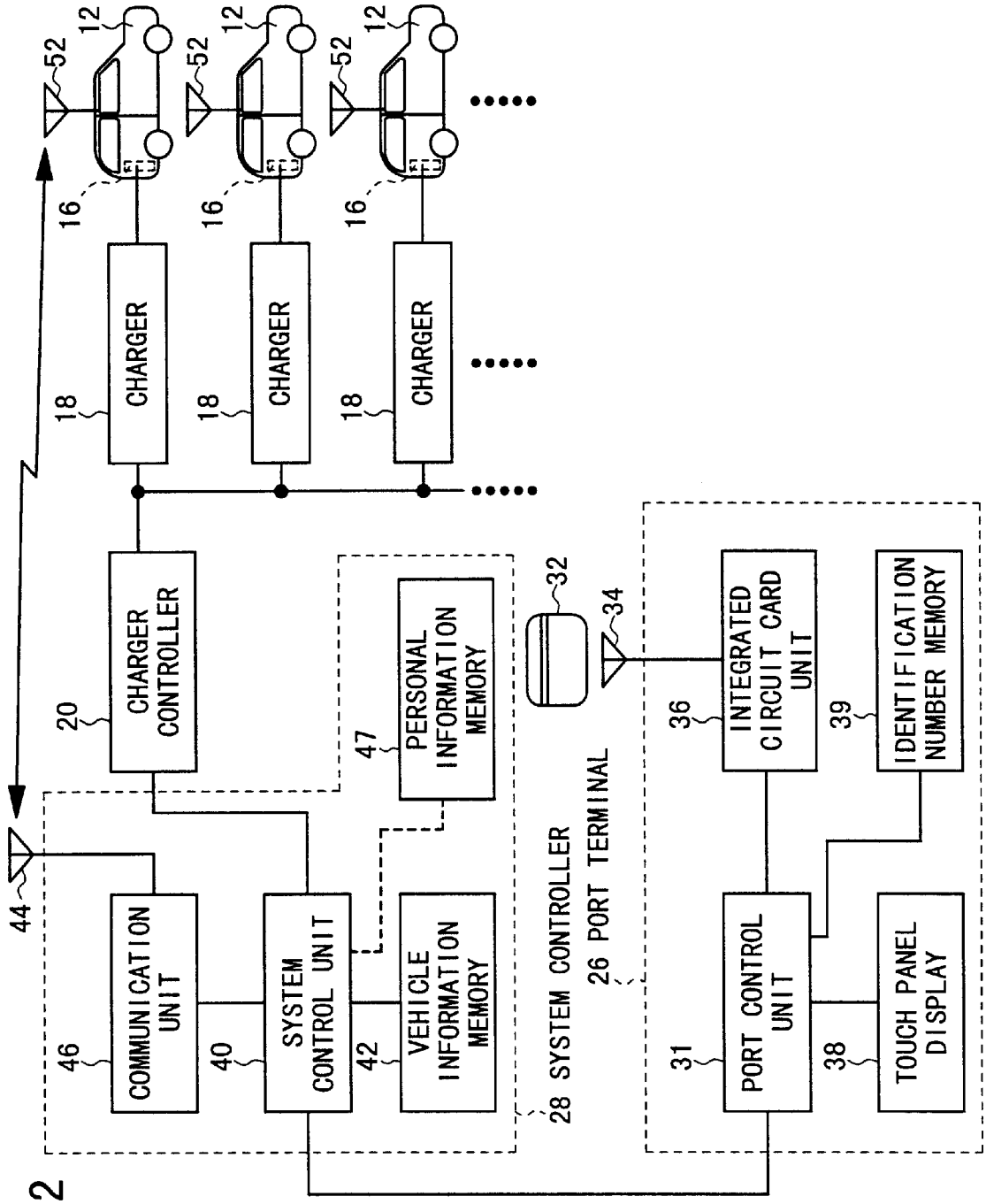
12
52
16
18
CHARGER
20
CHARGER CONTROLLER
44
46
COMMUNICATION UNIT
40
SYSTEM CONTROL UNIT
42
VEHICLE INFORMATION MEMORY
47
PERSONAL INFORMATION MEMORY
28 SYSTEM CONTROLLER
32
34
26 PORT TERMINAL
36
INTEGRATED CIRCUIT CARD UNIT
39
IDENTIFICATION NUMBER MEMORY
31
PORT CONTROL UNIT
38
TOUCH PANEL DISPLAY

FIG. 2

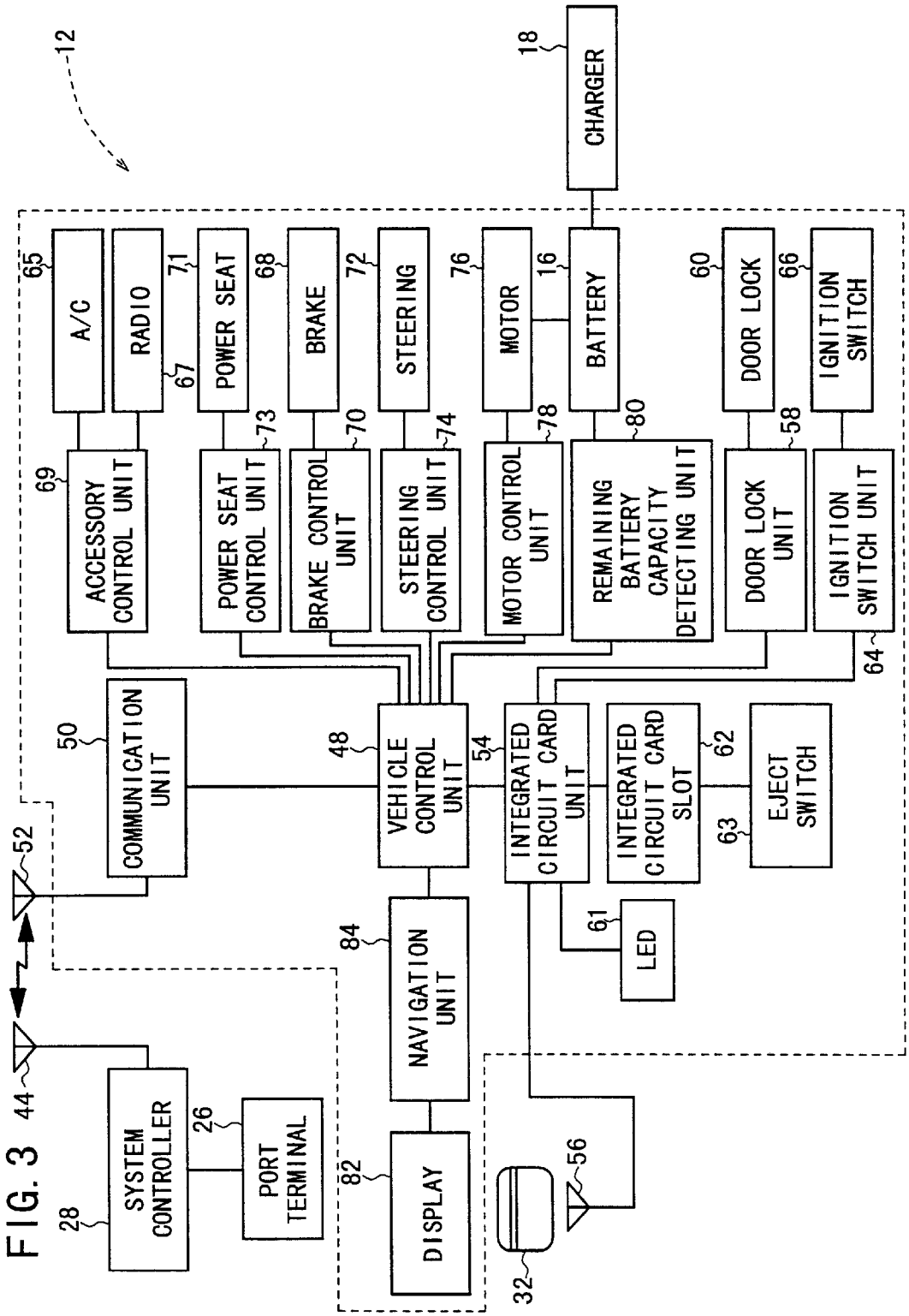
12
18
CHARGER
65
A/C
RADIO
71
67
POWER SEAT
68
BRAKE
72
STEERING
76
MOTOR
16
BATTERY
60
DOOR LOCK
66
IGNITION SWITCH
69
ACCESSORY CONTROL UNIT
73
POWER SEAT CONTROL UNIT
70
BRAKE CONTROL UNIT
74
STEERING CONTROL UNIT
78
MOTOR CONTROL UNIT
80
REMAINING BATTERY CAPACITY DETECTING UNIT
58
DOOR LOCK UNIT
64
IGNITION SWITCH UNIT
50
COMMUNICATION UNIT
48
VEHICLE CONTROL UNIT
54
INTEGRATED CIRCUIT CARD UNIT
INTEGRATED CIRCUIT CARD SLOT
62
63
EJECT SWITCH
52
61
LED
84
NAVIGATION UNIT
44
SYSTEM CONTROLLER
26
PORT TERMINAL
28
82
DISPLAY
56
32

FIG. 3

FIG. 4

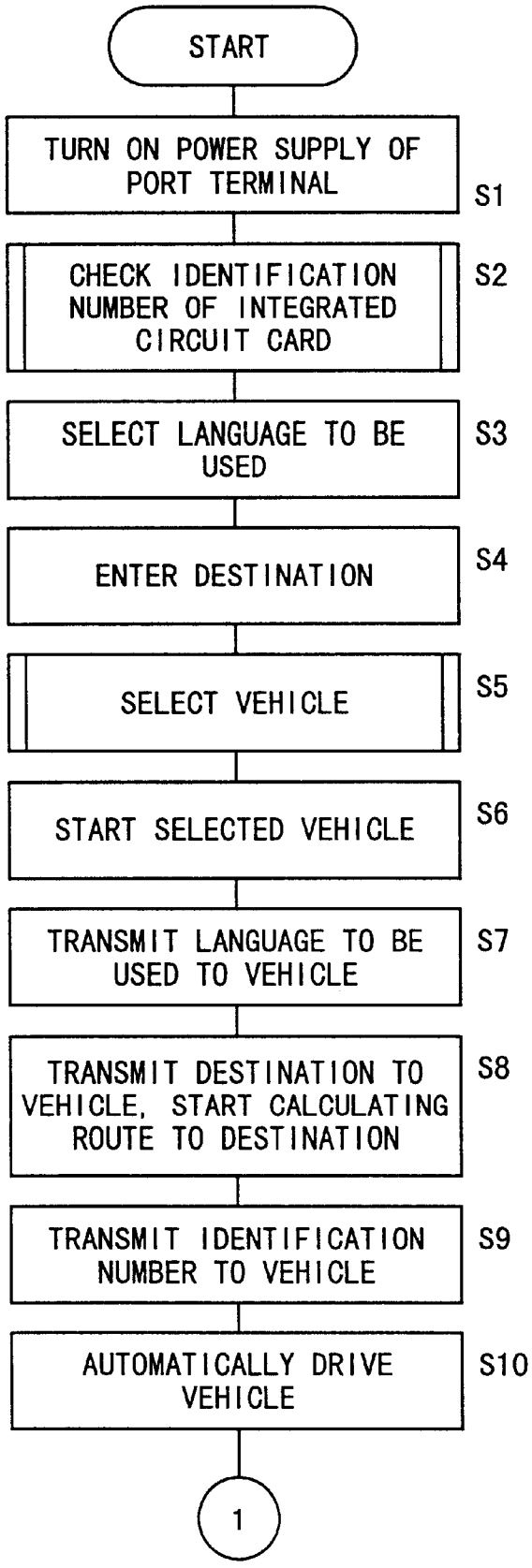
START
TURN ON POWER SUPPLY OF PORT TERMINAL
S1
CHECK IDENTIFICATION NUMBER OF INTEGRATED CIRCUIT CARD
S2
SELECT LANGUAGE TO BE USED
S3
ENTER DESTINATION
S4
SELECT VEHICLE
S5
START SELECTED VEHICLE
S6
TRANSMIT LANGUAGE TO BE USED TO VEHICLE
S7
TRANSMIT DESTINATION TO VEHICLE, START CALCULATING ROUTE TO DESTINATION
S8
TRANSMIT IDENTIFICATION NUMBER TO VEHICLE
S9
AUTOMATICALLY DRIVE VEHICLE
S10
1

FIG. 5

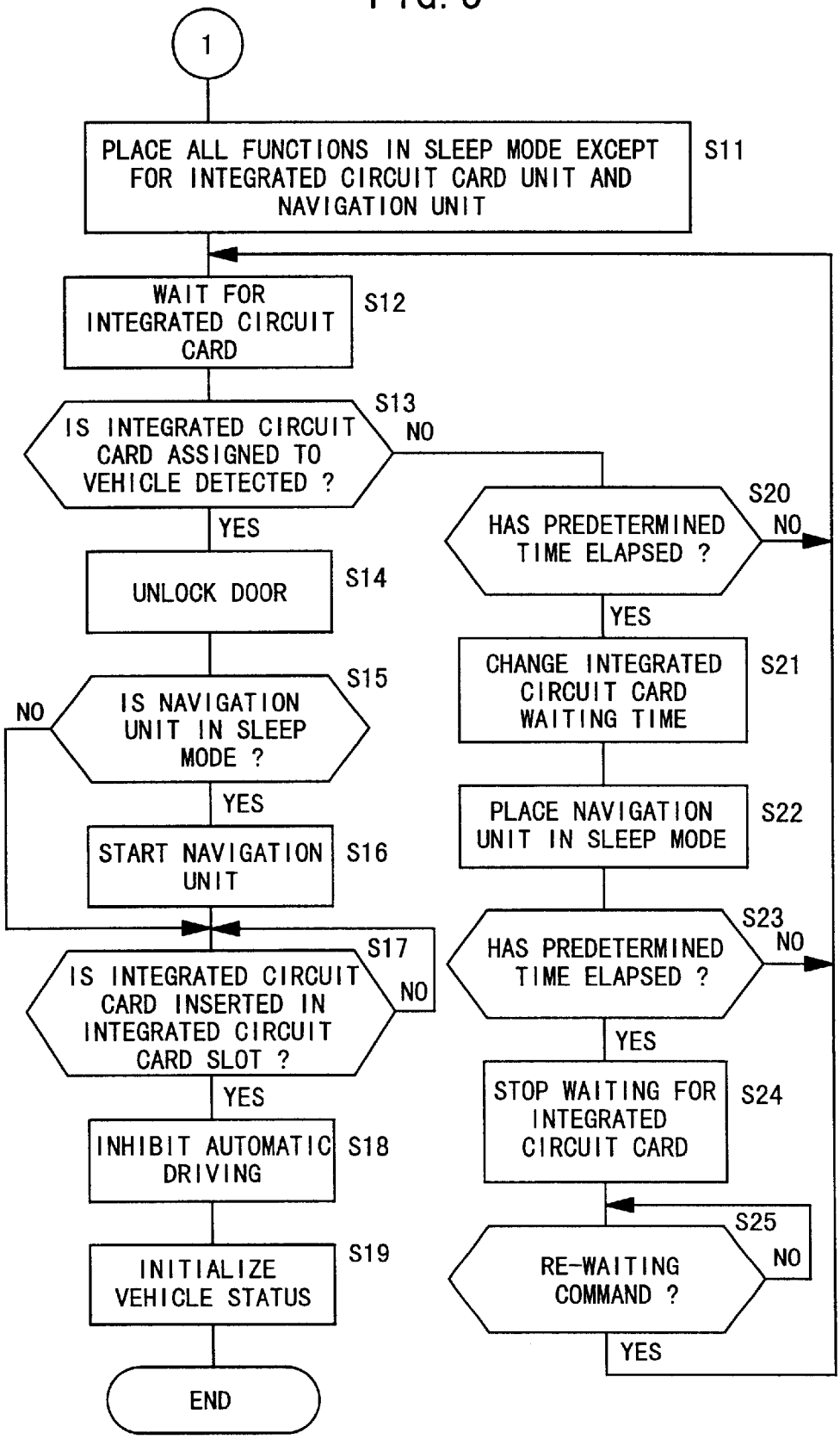
1
PLACE ALL FUNCTIONS IN SLEEP MODE EXCEPT FOR INTEGRATED CIRCUIT CARD UNIT AND NAVIGATION UNIT
S11
WAIT FOR INTEGRATED CIRCUIT CARD
S12
IS INTEGRATED CIRCUIT CARD ASSIGNED TO VEHICLE DETECTED ?
S13
NO
YES
UNLOCK DOOR
S14
IS NAVIGATION UNIT IN SLEEP MODE ?
S15
NO
YES
START NAVIGATION UNIT
S16
IS INTEGRATED CIRCUIT CARD INSERTED IN INTEGRATED CIRCUIT CARD SLOT ?
S17
NO
YES
INHIBIT AUTOMATIC DRIVING
S18
INITIALIZE VEHICLE STATUS
S19
END
HAS PREDETERMINED TIME ELAPSED ?
S20
NO
YES
CHANGE INTEGRATED CIRCUIT CARD WAITING TIME
S21
PLACE NAVIGATION UNIT IN SLEEP MODE
S22
HAS PREDETERMINED TIME ELAPSED ?
S23
NO
YES
STOP WAITING FOR INTEGRATED CIRCUIT CARD
S24
RE-WAITING COMMAND ?
S25
NO
YES

FIG. 6

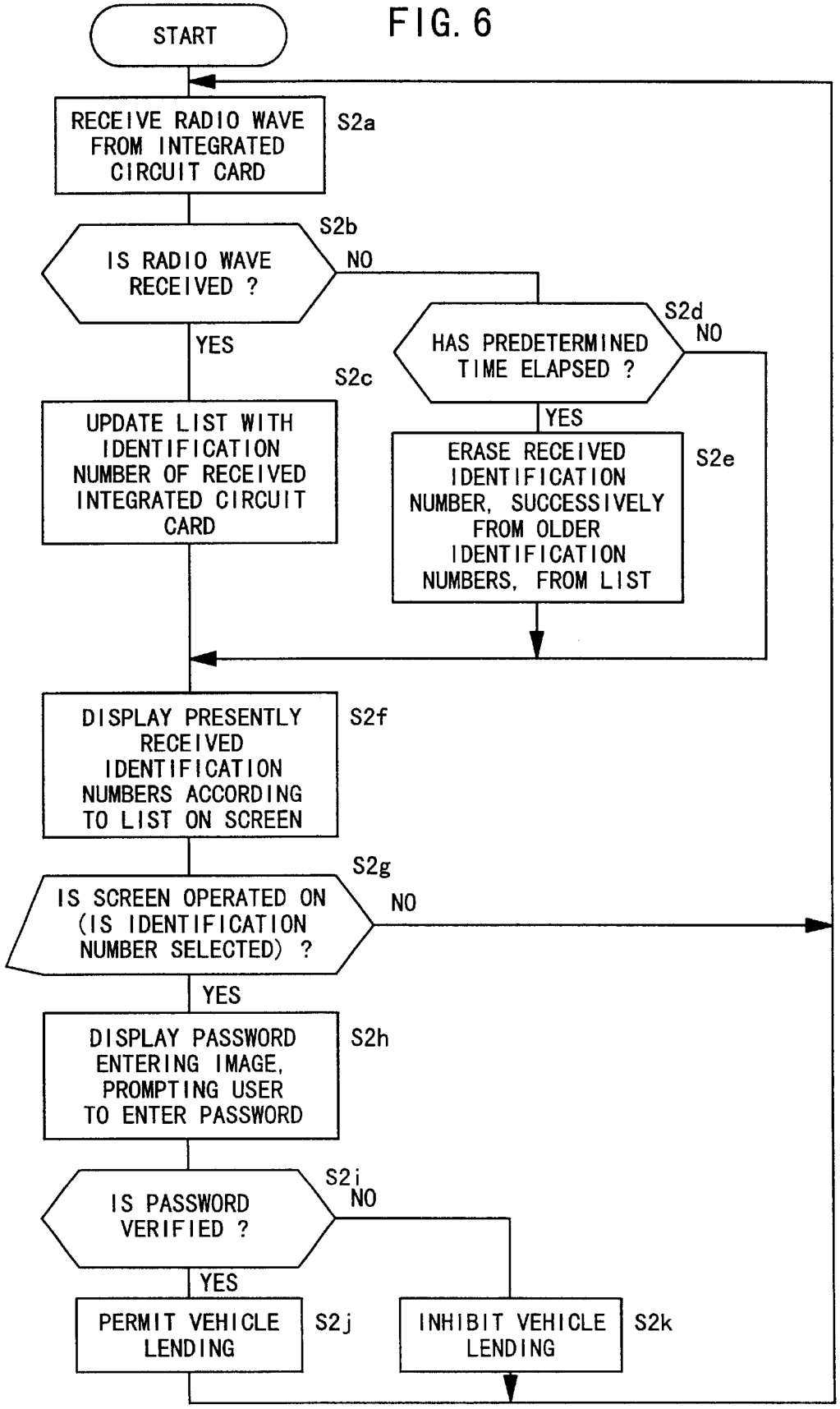
START
RECEIVE RADIO WAVE FROM INTEGRATED CIRCUIT CARD
S2a
IS RADIO WAVE RECEIVED ?
S2b
NO
YES
HAS PREDETERMINED TIME ELAPSED ?
S2d
NO
YES
UPDATE LIST WITH IDENTIFICATION NUMBER OF RECEIVED INTEGRATED CIRCUIT CARD
S2c
ERASE RECEIVED IDENTIFICATION NUMBER, SUCCESSIVELY FROM OLDER IDENTIFICATION NUMBERS, FROM LIST
S2e
DISPLAY PRESENTLY RECEIVED IDENTIFICATION NUMBERS ACCORDING TO LIST ON SCREEN
S2f
IS SCREEN OPERATED ON (IS IDENTIFICATION NUMBER SELECTED) ?
S2g
NO
YES
DISPLAY PASSWORD ENTERING IMAGE, PROMPTING USER TO ENTER PASSWORD
S2h
IS PASSWORD VERIFIED ?
S2i
NO
YES
PERMIT VEHICLE LENDING
S2j
INHIBIT VEHICLE LENDING
S2k

FIG. 7

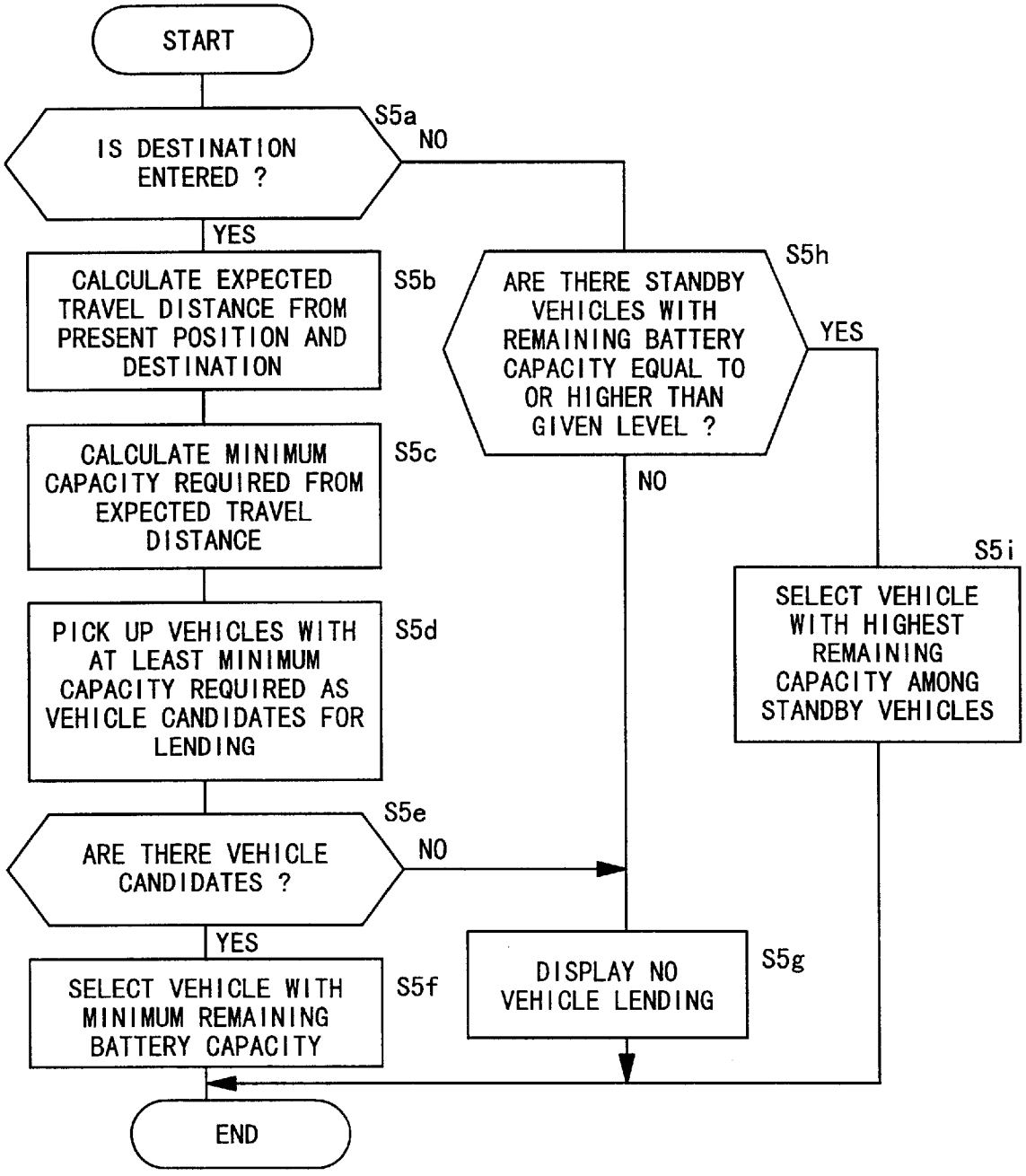
START
IS DESTINATION ENTERED ?
S5a
NO
YES
CALCULATE EXPECTED TRAVEL DISTANCE FROM PRESENT POSITION AND DESTINATION
S5b
CALCULATE MINIMUM CAPACITY REQUIRED FROM EXPECTED TRAVEL DISTANCE
S5c
PICK UP VEHICLES WITH AT LEAST MINIMUM CAPACITY REQUIRED AS VEHICLE CANDIDATES FOR LENDING
S5d
ARE THERE VEHICLE CANDIDATES ?
S5e
NO
YES
SELECT VEHICLE WITH MINIMUM REMAINING BATTERY CAPACITY
S5f
ARE THERE STANDBY VEHICLES WITH REMAINING BATTERY CAPACITY EQUAL TO OR HIGHER THAN GIVEN LEVEL ?
S5h
YES
NO
SELECT VEHICLE WITH HIGHEST REMAINING CAPACITY AMONG STANDBY VEHICLES
S5i
DISPLAY NO VEHICLE LENDING
S5g
END

FIG. 8

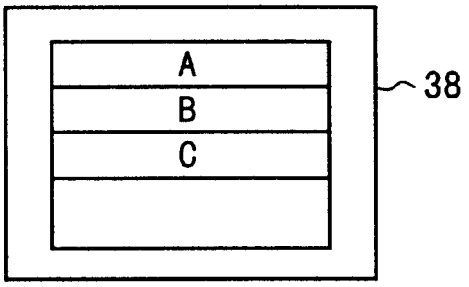

FIG. 9

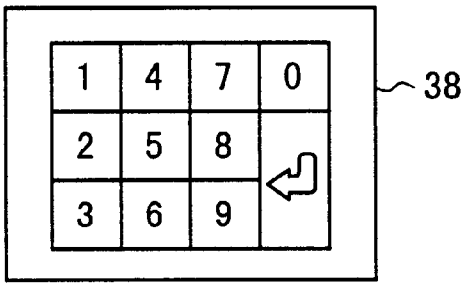

FIG. 10

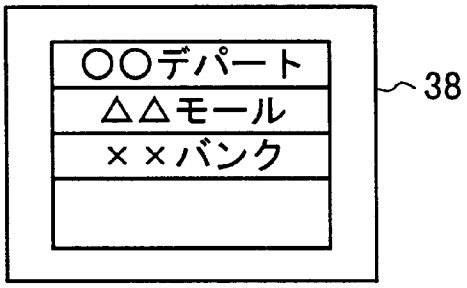

FIG. 11

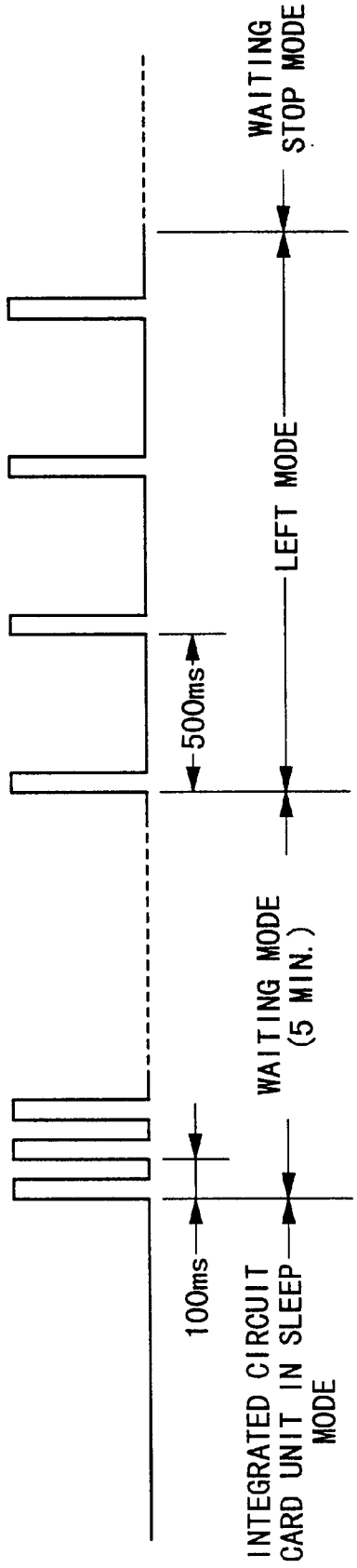
WAITING STOP MODE
LEFT MODE
500ms
WAITING MODE (5 MIN.)
100ms
INTEGRATED CIRCUIT CARD UNIT IN SLEEP MODE

FIG. 12

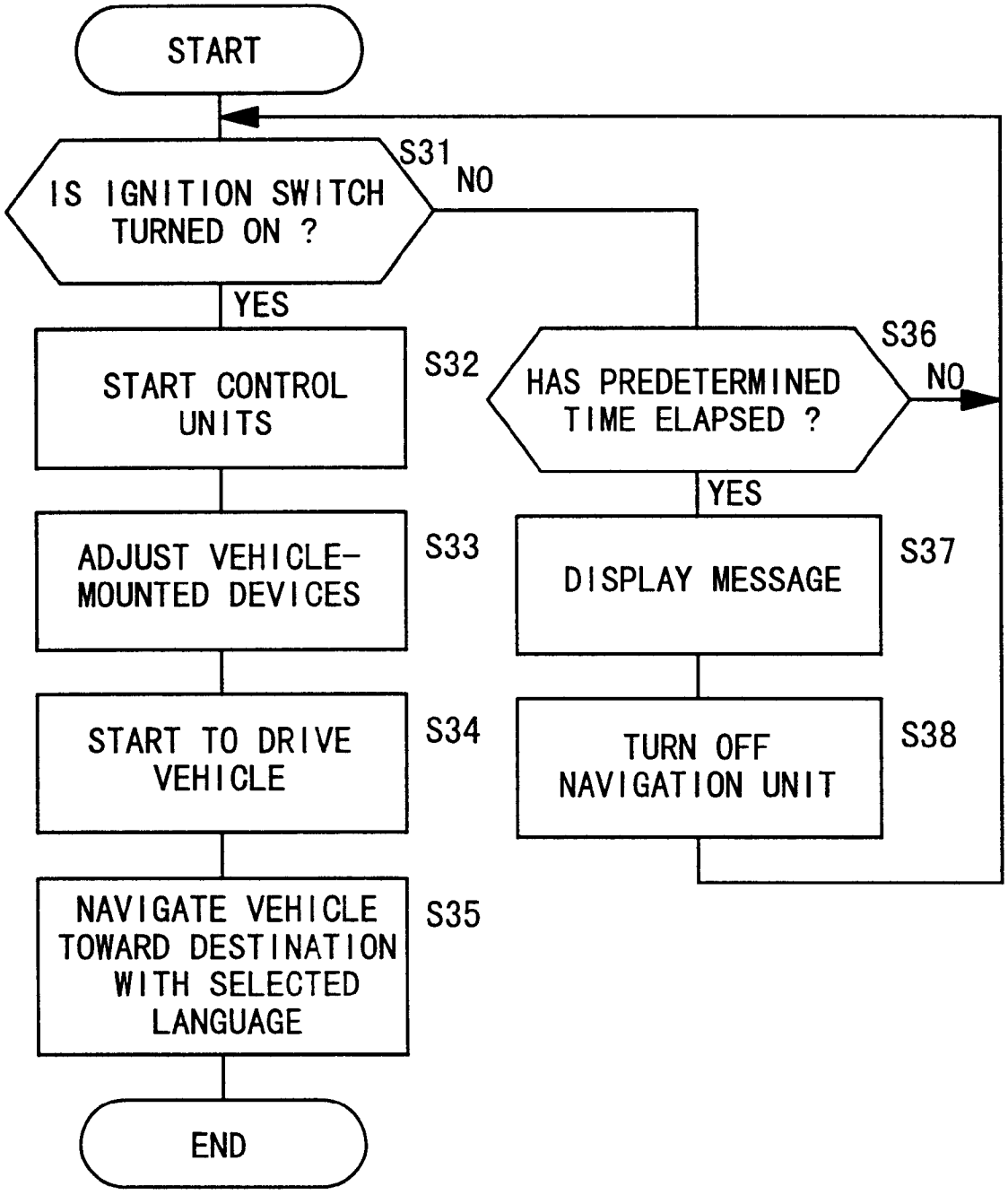
START
IS IGNITION SWITCH TURNED ON ?
S31
NO
YES
START CONTROL UNITS
S32
ADJUST VEHICLE-MOUNTED DEVICES
S33
START TO DRIVE VEHICLE
S34
NAVIGATE VEHICLE TOWARD DESTINATION WITH SELECTED LANGUAGE
S35
END
HAS PREDETERMINED TIME ELAPSED ?
S36
NO
YES
DISPLAY MESSAGE
S37
TURN OFF NAVIGATION UNIT
S38

FIG. 13

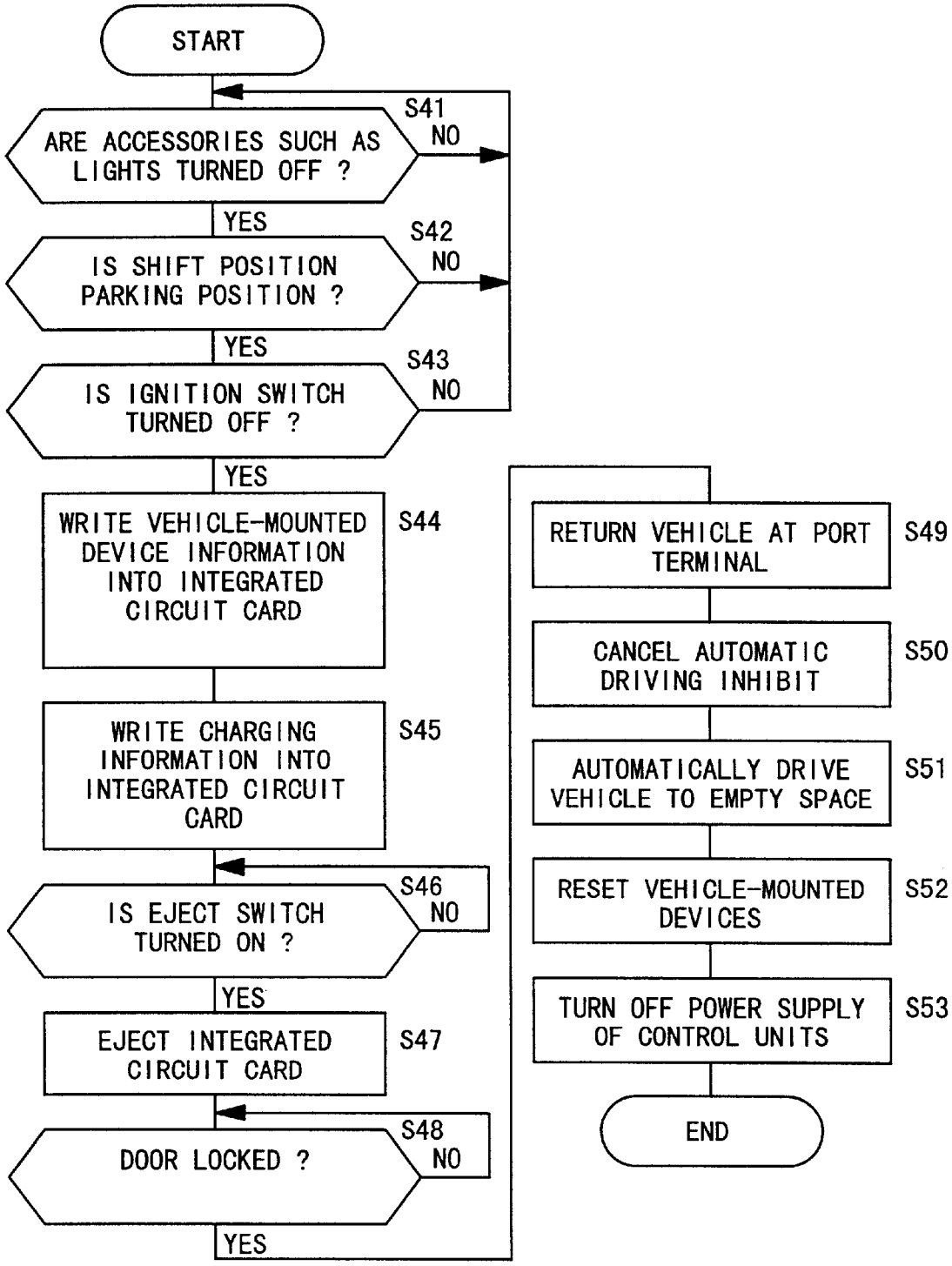
START
ARE ACCESSORIES SUCH AS LIGHTS TURNED OFF ?
S41
NO
YES
IS SHIFT POSITION PARKING POSITION ?
S42
NO
YES
IS IGNITION SWITCH TURNED OFF ?
S43
NO
YES
WRITE VEHICLE-MOUNTED DEVICE INFORMATION INTO INTEGRATED CIRCUIT CARD
S44
WRITE CHARGING INFORMATION INTO INTEGRATED CIRCUIT CARD
S45
IS EJECT SWITCH TURNED ON ?
S46
NO
YES
EJECT INTEGRATED CIRCUIT CARD
S47
DOOR LOCKED ?
S48
NO
YES
RETURN VEHICLE AT PORT TERMINAL
S49
CANCEL AUTOMATIC DRIVING INHIBIT
S50
AUTOMATICALLY DRIVE VEHICLE TO EMPTY SPACE
S51
RESET VEHICLE-MOUNTED DEVICES
S52
TURN OFF POWER SUPPLY OF CONTROL UNITS
S53
END

VEHICLE SHARING SYSTEM

BACKGROUND OF THE INVENTION

1. Field of the Invention

The present invention relates to a vehicle sharing system for allowing a plurality of users to share vehicles.

2. Description of the Related Art

Today, automobiles play an important role as an indispensable means for allowing people to move in and beyond local areas, and the number of automobiles being used keeps growing. The increasing number of automobiles being used not only causes serious traffic jams, but also demands more and more parking spaces. For example, medium-size cities in the outskirts of larger cities need parking spaces near stations for automobiles that are used by people who take commuter trains. However, automobiles in such parking spaces remain parked in the daytime, and are usually driven in and out of the parking lots early morning and evening for taking commuter trains and going home.

In view of such a wasteful way of using automobiles, there has been a demand for a system which allows users to rent automobiles only when necessary. In the presently available automobile rental system, a user fills out an application paper at an automobile rental company to rent an automobile, receives the key of the automobile, uses it for a desired period of time, and finally returns the automobile to the automobile rental company. This automobile rental system allows users to use automobiles only when necessary though the process to apply for the renting of automobiles is somewhat complex.

Efforts are currently being made to develop electric vehicles which are less harmful in terms of air pollution and noise than automobiles which run on fossil fuels such as gasoline, though the electric vehicles are still more expensive than the present automobiles. If electric vehicles can be shared by a plurality of users, then such a sharing system is highly economical and produces other advantages including protection against air pollution and noise.

There is a demand for a system which allows a plurality of users to share vehicles easily. However, no matter how easy such a system may be to allow users to share vehicles, it is necessary for a user to enter settings about a vehicle which the user has selected.

Specifically, the driver's seat of the selected vehicle is associated with various instruments and devices for outputting information that is used to assist in driving the vehicle. For example, one of the devices is known as a navigation system for displaying map information to guide the vehicle to a destination. Some navigation systems have a display unit for displaying running states of the vehicle and states of an air-conditioning system, a stereo set (radio set), etc. Users of vehicles in the sharing system are not limited to people who speak Japanese, but may be people who speak various different languages including English, German, and French. Therefore, it is necessary for a user to change a setting for the display on the above vehicle-mounted devices depending on the language used by the user. Such a setting change poses a burden on the user, and may not possibly be made if the user is unaware of the proper process of making a setting change.

SUMMARY OF THE INVENTION

It is a general object of the present invention to provide a vehicle sharing system which is capable of automatically

setting a language to be used in information output means on devices in a vehicle to be used by a user, depending on the language used by the user.

A major object of the present invention is to provide a vehicle sharing system which is capable of automatically setting a language to be used depending on the process performed by a user to rent a vehicle.

Another object of the present invention is to provide a vehicle sharing system which is capable of setting a language to be used on the basis of information from information holding means which holds information as to a user.

The above and other objects, features, and advantages of the present invention will become more apparent from the following description when taken in conjunction with the accompanying drawings in which a preferred embodiment of the present invention is shown by way of illustrative example.

BRIEF DESCRIPTION OF THE DRAWINGS

FIG. **1** is a schematic perspective view of a vehicle sharing system according to the present invention;

FIG. **2** is a block diagram of a system controller and a port terminal of the vehicle sharing system;

FIG. **3** is a block diagram of a control system of an electric vehicle;

FIGS. **4** and **5** are a flowchart of the main routine of a vehicle lending process;

FIG. **6** is a flowchart of the subroutine of an IC card verifying process;

FIG. **7** is a flowchart of the subroutine of a vehicle selecting process;

FIG. **8** is a diagram of a list of user ID numbers displayed on a display unit at the port terminal;

FIG. **9** is a diagram of a password entering image displayed on the display unit at the port terminal;

FIG. **10** is a diagram of a destination selecting image displayed on the display unit at the port terminal;

FIG. **11** is a timing chart of an ID number reading process carried out by an IC card unit;

FIG. **12** is a flowchart of a vehicle running process; and

FIG. **13** is a flowchart of a vehicle returning process.

DESCRIPTION OF THE REFERRED EMBODIMENT

FIG. **1** schematically shows a vehicle sharing system according to the present invention. The vehicle sharing system shown in FIG. **1** has a vehicle distribution port or station **10** that is typically positioned in an area near a station, a street, etc. to which users have easy access. The vehicle distribution port **10** is usually located in a building **11**, and has a parking space **14** where a plurality of electric vehicles **12** are parked. The electric vehicles **12** are parked in respective zones that are associated with respective chargers **18** for charging batteries **16** (see FIG. **2**) mounted on the electric vehicles **12**.

Each of the chargers **18** is controlled by a charger controller **20**. The building **11** has a gate **22** through which electric vehicles **12** drive in and out of the parking space **14**. A port terminal **26** is disposed near the gate **22** outside of the building **11**. The port terminal **26** is operated by users **24** to rent desired electric vehicles **12** and return electric vehicles **12** after they have been used. The vehicle distribution port **10** has a system controller **28** for controlling the vehicle

sharing system in its entirety. The system controller **28** controls the electric vehicles **12**, the charger controller **20**, the gate **22**, and the port terminal **26**. The reference numeral **30** in FIG. **1** designates a destination to which an electric vehicle **12** rented by a user **24** travels.

FIG. **2** shows in block form the port terminal **26** and the system controller **28**. The port terminal **26** has a port control unit **31** and an IC (integrated circuit) card unit **36** for reading data from and writing data into an inherent IC card **32** via an antenna **34**. The inherent IC card **32** stores the ID (identification) number as inherent identification number of a user **24** and personal data of the user **24**. The port terminal **26** also has a touch panel display unit **38** which can be operated by the user **24**, and an ID number memory **39** for storing an ID number read from the inherent ID card **32**.

The port terminal **26** may have a CRT display unit or a liquid crystal display unit and a keyboard, rather than the touch panel display unit **38**, so that the user **24** can enter data using the keyboard. Information may be indicated to the user **24** with the touch panel display unit **38** and also a voice guidance system. The inherent IC card **32**, which is issued to each user **24**, has a battery, a memory, a radio transmitter, etc. (not shown), and transmits information (the ID number of the inherent IC card **32**) stored in the memory with a radio wave having a predetermined frequency with a small amount of electric energy. The memory of the inherent IC card **32** has a sufficient storage capacity for storing various other items of information than the ID number. For example, the memory of the inherent IC card **32** stores personal data representing the angle and height of a steering wheel **72** of the electric vehicle **12** used by the user **24**, the position of a power seat **71** of the electric vehicle **12**, the temperature setting of an air-conditioning system **65**, and selected stations and music pieces of a radio set **67** of the electric vehicle **12**, for example. In order to prevent the battery of the inherent IC card **32** from being unduly discharged, the inherent IC card **32** transmits information stored in the memory only when it receives a transmission command signal from the port terminal **26** and the electric vehicle **12**.

The system controller **28** has a system control unit **40** connected to the port control unit **31** and a vehicle information memory **42** for storing vehicle information including inventory information, vehicle number information, battery charge information, vehicle return information, etc. of the electric vehicles **12** placed in the parking space **14**. The vehicle information is received from the electric vehicles **12** via an antenna **44** by a communication unit **46**. The system controller **28** also has a personal information memory **47** for storing personal data of users **24**. The personal information memory **47** is required only when a common IC card (described later) is used, and is not necessary when the inherent IC card **32** according to the illustrated embodiment is used.

FIG. **3** shows in block form a control system of the electric vehicle **12**. As shown in FIG. **3**, the electric vehicle **12** has a vehicle control unit **48** for controlling the electric vehicle **12** in its entirety when it is in an automatic driving mode. To the vehicle control unit **48**, there is connected a communication unit **50** for exchanging information with the system controller **28** via an antenna **52**. The electric vehicle **12** has an IC card unit **54**. The IC card unit **54** reads the ID number from the inherent IC card **32** via an antenna **56**. When the IC card unit **54** confirms that the user **24** is a legitimate user, it controls the door lock unit **58** to release a door lock **60**. The IC card unit **54** reads the personal data from inherent IC card **32** to adjust various facilities or devices on the electric vehicle **12** to personal settings corresponding to the user **24**. When the inherent IC card **32** is inserted into an IC card slot **62** in the electric vehicle **12**, the IC card unit **54** controls the ignition switch unit **64** to permit an ignition switch **66** to be operated. The to IC card slot **62** has an eject switch **63** for ejecting the inherent IC card **32** when the user **24** gets off the electric vehicle **12**. An LED **61** for indicating a card waiting mode is connected to the IC card unit **54**. The LED **61** is located in a position which can be visually recognized by the user **24** outside of the electric vehicle **12**.

The vehicle control unit **48** is connected to an accessory control unit **69** for controlling various accessories in the electric vehicle **12** which include an air-conditioning system (A/C) **65**, a radio set **67**, etc. according to the personal data, a power seat control unit **73** for controlling the position of the power seat **71** according to the personal data, a brake control unit **70** for controlling a brake **68**, a steering control unit **74** for controlling a steering wheel **72**, a motor control unit **78** for controlling an electric motor **76** which serves as a propulsion source of the electric vehicle **12**, and a remaining battery capacity detecting unit **80** for detecting a remaining capacity of the battery **16**. A navigation unit **84** having a display unit **82** is connected to the vehicle control unit **48**.

The vehicle sharing system according to the present invention is basically constructed as described above. Operation of the electric vehicle **12** will be described below successively with respect to a vehicle lending process, a vehicle running process, and a vehicle returning process.

A vehicle lending process will be described below with reference to FIGS. **4** through **7**.

When a user **24** with an inherent IC card **32** issued thereto by an IC issuing facility approaches the port terminal **26** in order to use an electric vehicle **12**, the IC card unit **36** detects the inherent IC card **32** via the antenna **34**. The power supply of the port terminal **26** in a sleep mode is turned on, and the port control unit **31** starts to operate, energizing the touch panel display unit **38** in step S**1**.

The ID number is then checked to confirm whether the inherent IC card **32** can be used or not in step S**2**. An IC card verification process will be described below with reference to FIG. **6**.

The port control unit **31** repeatedly executes the IC card verification process shown in FIG. **6** to handle a plurality of users **24**. Specifically, the IC card unit **36** receives a radio wave transmitted from the inherent IC card **32** in step S**2***a*. The port control unit **31** monitors a reception status of the IC card unit **36** at all times. When the port control unit **31** detects the reception of the radio wave by the IC card unit **36** in step S**2***b*, the port control unit **31** reads the ID number registered in the inherent IC card **32**, and updates a list of ID numbers stored in ID number memory **39** in step S**2***c*. If the port control unit **31** does not detect the reception of a radio wave by the IC card unit **36** for a predetermined period of time in step S**2***d*, then the port control unit **31** deletes an ID number successively from older ID numbers from the list in step S**2***e*. Therefore, an ID number which has been received within the predetermined period of to time is successively registered in the list.

The port control unit **31** displays the list on the touch panel display unit **38** in step S**2***f*. FIG. **8** shows by way of example a list of ID numbers A, B, C, . . . read from the inherent IC cards **32** of a plurality of users **24** on the touch panel display unit **38**. When the user **24** selects the ID number of the inherent IC card **32** which is owned by the user **24** in step S**2***g*, the touch panel display unit **38** displays a password entering image (see FIG. **9**). The user **24** then

enters its own password that has been registered in step S2*h*. The port control unit **31** asks the system control unit **40** of the system controller **28** to decide whether the entered password agrees with the registered password or not in step S2*i*. If the entered password agrees with the registered password, then the port control unit **31** permits vehicle lending to the user **24** in step S2*j*. If the entered password does not agree with the registered password, then the port control unit **31** determines that the user **24** cannot use an electric vehicle **12**, and inhibits vehicle lending to the user **24** in step S2*k*.

After the ID number is verified and vehicle lending is permitted, the user **24** selects a language to be used, e.g., Japanese or English, according to an instruction displayed on the touch panel display unit **38** in step S3 (see FIG. **4**). When the user selects a language to be used, the selected language will be used in a displayed image for selecting a designation and displayed images on the display unit **82** in the electric vehicle **12**. Information relative to the selected language can be transmitted from the IC card unit **36** via the antenna **34**, recorded in the inherent IC card **32**, and transferred to the system controller **28**.

The user **24** then enters a destination **30** according to an image displayed in the selected language in step S4. FIG. **10** shows by way of example a displayed image on the touch panel display unit **38** in the case where Japanese has been selected as a language to be used. Information relative to the destination **30** selected by the user **24** is transferred to the system controller **28**.

The system controller **28** then selects an electric vehicle **12** that can be lent, according to information on the distance between the destination **30** and the present position in step S5. A vehicle selecting process will be described in detail below with reference to FIG. **7**.

When the destination **30** is entered in step S5*a*, the system controller **28** calculates the distance to travel between the present position and the destination **30**. Specifically, the system controller **28** has a map information holding means for holding map information covering the destination **30**, such as a known navigation system. The system controller **28** calculates a predicted travel distance from the present position, i.e., the vehicle distribution port **10**, to the destination **30**, according to the map information in step S5*b*. The predicted travel distance may be determined simply as a linear distance between the present position and the destination **30**, or may be calculated as an actual route from the present position to the destination **30** using the navigation system.

Then, the system controller **28** calculates a minimum capacity required for the battery **16** on the electric vehicle **12** to enable the electric vehicle **12** to travel the predicted travel distance in step S5*c*. The minimum capacity can be determined, for example, as the product of an average amount V of electric energy consumed when the electric vehicle **12** travels at an average speed, the predicted travel distance L, and a safety factor K (K>1.0).

The system controller **28** picks up electric vehicles **12** whose batteries have remaining capacities equal to or greater than the calculated minimum capacity, as vehicle candidates for lending, among the electric vehicles **12** kept in the parking space **14** in step S5*d*.

The batteries **16** on the electric vehicles **12** kept in the parking space **14** have been charged by the respective chargers **18**, and charged states of the batteries **16** are detected by the remaining battery capacity detecting units **80** of the electric vehicles **12**. The remaining battery capacity of a battery **16** can be determined from an integrated value of charging currents of the battery **16**. The determined remaining battery capacity is transferred to the system controller **28** via the communication unit **50**, and stored, together with the vehicle number, in the vehicle information memory **42**.

The system control unit **40** compares the remaining battery capacities stored in the vehicle information memory **42** with the minimum capacity. If there are vehicle candidates for lending whose batteries have remaining capacities equal to or greater than the calculated minimum capacity in step S5*e*, then the system control unit **40** selects an electric vehicle **12** whose battery has a minimum remaining battery capacity among the vehicle candidates for lending in step S5*f*. If there are no vehicle candidates for lending in step S5*e*, then the system control unit **40** displays a message "No vehicle lending" on the touch panel display unit **38** of the port terminal **26** in step S5*g*. The system control unit **40** may alternatively display a message "Only electric vehicles with small remaining battery capacities are available. Do you still want to rent an electric vehicle ?", giving the user **24** an option to select such an electric vehicle.

If no destination **30** is entered in step **5***a*, the system control unit **40** decides whether there are electric vehicles whose batteries have remaining battery capacities equal to or greater than a predetermined level, e.g., 70% of a fully charged state, in step S5*h*. If there no such electric vehicles, then the system control unit **40** displays the message "No vehicle lending" on the touch panel display unit **38** of the port terminal **26** in step S5*g*. If there are such electric vehicles, then the system control unit **40** selects an electric vehicle **12** whose battery has a maximum remaining battery capacity among the standby vehicles in step S5*i*.

As described above, if the destination **30** is entered, then an electric vehicle **12** that can be lent whose remaining battery capacity is minimum is selected, thus giving subsequent users **24** a range of selectable electric vehicles. If no destination **30** is entered, then an electric vehicle **12** that can be lent whose remaining battery capacity is maximum is selected, thus lending an electric vehicle **12** which is safer in terms of traveling capability to the user **24** whose travel distance is unknown.

After the electric vehicle **12** is thus selected, the system control unit **40** causes the communication unit **46** to start to operate the vehicle control unit **48** of the selected electric vehicle **12** in step S6. Until the selected electric vehicle **12** reaches the user **24**, the IC card unit **54** of the electric vehicle **12** remains inactive so that the door lock will not be released or other troubles will not occur. Therefore, the LED **61** for indicating the card waiting mode also remains turned off.

The system control unit **40** transfers information as to the language selected by the user **24** in step S3 to the vehicle control unit **48** of the electric vehicle **12**. The vehicle control unit **48** sets the navigation unit **84** to the information as to the selected language in step S7.

The system control unit **40** transfers information as to the destination **30** entered by the user **24** in step S4 to the vehicle control unit **48** of the electric vehicle **12**. The vehicle control unit **48** transfers the information as to the destination **30** to the navigation unit **84**, which then calculates a route to the destination **30** in step S8. The navigation unit **84** may calculate the route to the destination **30**, or may directly receive a route calculated by the system controller **28**.

The system control unit **40** transfers information as to the ID number of the inherent IC card **32** owned by the user **24** to the vehicle control unit **48** of the electric vehicle **12** in step S9.

Thereafter, the system controller **28** instructs the selected electric vehicle **12** to be automatically driven in step S**10**. The vehicle control unit **48** of the electric vehicle **12** thus instructed controls the motor control unit **78**, the steering control unit **74**, and the brake control unit **70** to operate the motor **76**, the steering wheel **72**, and the brake **68** to automatically drive the electric vehicle **12** to the gate **22**. The navigation unit **84** may calculate the route to the destination **30** until the electric vehicle **12** is automatically driven to the gate **22**.

The electric vehicle **12** may be automatically driven in various ways. For example, a white line **15** (see FIG. **1**) in the parking space **14** may be detected by a sensor (not shown) on the electric vehicle **12**, and the electric vehicle **12** may be controlled to follow the detected white line **15**. Alternatively, the electric vehicle **12** may travel to a destination (the gate **22**) while detecting and avoiding obstacles with a camera and/or a radar. Further alternatively, map information in the vehicle distribution port **10** may be stored in the navigation unit **84** of the electric vehicle **12**, and the detected positional information of the electric vehicle **12** and the map information may be compared with each other to guide the electric vehicle **12** to the gate **22**. Furthermore, the above automatic driving processes may be combined with each other. The electric vehicle **12** may be automatically driven in the same manner as described above when it is to return to a given position in the parking space **14**. When the electric vehicle **12** returns to the given position in the parking space **14**, the position of the charger **18** is detected, and the electric vehicle **12** is automatically guided to connect a charging connector (not shown) of the battery **16** properly to the charger **18**.

After the electric vehicle **12** has been automatically driven to and stopped at a position where the user **24** is waiting, the automatically driving of the electric vehicle **12** is completed, and all functions of the electric vehicle **12** including the display unit **82**, except for the IC card unit **54** and the navigation unit **84**, are brought into a sleep mode in step S**11**. The electric vehicle **12** now waits for the inherent IC card **32** owned by the user **24** in step S**12**. At this time, the LED **61** starts flickering, allowing the user **24** to visually recognize, from outside of the electric vehicle **12**, that the electric vehicle **12** is waiting for the inherent IC card **32**. Since all the functions of the electric vehicle **12** except for the necessary functions are placed in the sleep mode, the electric vehicle **12** is prevented from go malfunctioning while being automatically driven, and an unwanted consumption of battery energy is prevented until the user **24** gets on the electric vehicle **12**.

Specifically, as shown in FIG. **11**, the IC card unit **54** transmits a transmission command signal intermittently at intervals of 100 ms in order to read the ID number of the inherent IC card **32**. The LED **61** flickers at intervals of 100 ms depending on a reading process carried out by the IC card unit **54**. While in the card waiting mode, when the user **24** moves the inherent IC card **32** closely to the electric vehicle **12**, the IC card unit **54** receives a radio wave transmitted from the inherent IC card **32**, recognizes the ID number thereof, and checks the recognized ID number against the IC number that has been transferred from the system controller **28** in step S**9**. If the ID numbers agree with each other **25** in step S**13**, then the IC card unit **54** determines the electric vehicle **12** as the electric vehicle selected by the user **24**, and controls the door lock unit **58** to release the door lock **60** in step S**14**. If the door lock **60** is not released a predetermined period of time after the electric vehicle **12** has arrived at the user **24**, then the IC card unit **54** brings the navigation unit **84** into the sleep mode, thus avoiding an undesirable consumption of battery energy.

If the navigation unit **84** has been in the sleep mode in step S**15**, the IC card unit **54** restarts the navigation unit **84** in step S**16**, which displays map information using the selected language on the display unit **82**. Specifically, the navigation unit **84** displays images using the selected language on the display unit **82** based on the information as to the selected language transferred from the system controller **28**. Inasmuch as the navigation unit **84** quickly displays on the display unit **82** the route to the destination **30** that has been calculated while the electric vehicle **12** is being automatically driven, the user **24** can quickly go to the destination **30** according to the displayed route.

If the user **24** inserts the inherent IC card **32** into the IC card slot **62** after getting on the electric vehicle **12** in step S**17**, the IC card unit **54** determines that the inherent IC card **32** is inserted in the IC card slot **62**, outputs an automatic driving inhibit signal to the vehicle control unit **48**, switching to a manual driving mode in step S**18**. Then, the IC card unit **54** reads the personal data recorded in the inherent IC card **32**, initializes the electric vehicle **12** according to the personal data of the user **24**, and allows the ignition switch **66** to be operated by the user **24** in step S**19**.

If the personal data are recorded in the inherent IC card **32**, then the vehicle control unit **48** controls the steering control unit **74**, for example, to automatically adjust the height and angle of the steering wheel **72** to desired settings according to the recorded personal data. Similarly, the vehicle control unit **48** controls the power seat control unit **74** to automatically adjust the power seat **71** to a desired position according to the recorded personal data, and also controls the accessory control unit **69** to automatically adjust the air-conditioning system **65** and the radio set **67** to desired settings according to the recorded personal data.

If no personal data are recorded in the inherent IC card **32**, then the vehicle control unit **48** does not carry out the above adjusting operations.

If the inherent IC card **32** of the user is not detected in step S**13**, the IC card unit **54** decides whether a predetermined period of time, e.g., a continued waiting period of **5** minutes, has elapsed after the electric vehicle **12** has stopped in front of the port terminal **26** in step S**20**. If the IC card unit **54** receives a radio wave from the inherent IC card **32** at intervals of 100 ms prior to the elapse of 5 minutes, and then 5 minutes elapse, the IC card unit **54** changes the interval of time for waiting for the inherent IC card **32** from 100 ms to 500 ms (left mode), for example, and receives the radio wave from the inherent IC card **32** in step S**21**. The IC card unit **54** then brings the navigation unit **84** into the sleep mode in step S**22**. Then, the IC card unit **54** decides whether a predetermined period of time has elapsed in step S**23**. If the predetermined period of time has elapsed, then the IC card unit **54** stops waiting for the inherent IC card **32** in step S**24**. The above process is carried out because the user **24** may have temporarily moved to someplace else. If a re-waiting command is entered as when the user **24** operates the door knob in step S**25**, then control returns to step S**12**, and the processing in and after step S**12** is repeated. The interval of waiting time is an interval of the time in which the IC card unit **54** receives a radio wave from the inherent IC card **32** and the time in which the IC card unit **54** stops receiving a radio wave from the inherent IC card **32**. By changing the interval of waiting time from 100 ms to 500 ms, the power consumption by the IC card unit **54** is reduced, saving the electric energy stored in the battery **16** accordingly.

In this manner, while in the card waiting mode, the IC card unit **54** is operated intermittently at the intervals of 100 ms. If the IC card unit **54** fails to recognize the inherent IC card **32** after elapse of a predetermined period of time, then the IC card unit **54** is operated intermittently at the intervals of 500 ms. If the IC card unit **54** still fails to recognize the inherent IC card **32**, then the IC card unit **54** stops waiting for the inherent IC card **32**. Therefore, the power consumption by the IC card unit **54** is minimized, saving the electric energy stored in the battery **16** accordingly.

After the user **24** gets on the electric vehicle **12** in the fashion described above, the electric vehicle **12** starts running toward the destination **30**.

A vehicle running process will be described below with reference to FIG. **12**.

When the user **24** turns on the ignition switch **66** in step S**31**, the electric vehicle **12** is turned on, starting to operate the brake control unit **70**, the steering control unit **74**, the motor control unit **78**, the remaining battery capacity detecting unit **80**, and the door lock unit **58** which are required to drive the electric vehicle **12** in step S**32**. The electric vehicle **12** can now be driven by the user **24**. The is position of the steering wheel **72**, the position of the power seat **71**, and settings of other vehicle-mounted devices are manually adjusted by the user **24** in step S**33**. Personal data representing the adjusted settings are recorded in the inherent IC card **32** by the IC card unit **54**. Therefore, the personal data already recorded in the inherent IC card **32** are updated. The personal data thus recorded may be transferred to the system controller **28** via the communication unit **50**, and recorded thereby.

Subsequent to the above preparatory action, the electric vehicle **12** starts traveling to the destination **30** in step S**34**. At this time, the route to the destination **30** already calculated until the electric vehicle **12** reaches the user **24** is displayed in the selected language on the display unit **82**, together with voice guidance, if necessary, in the selected language in step S**35**. If Japanese, for example, has been selected as the language to be used, an audible message in Japanese corresponding to "Right turn ahead" is outputted. If English has been selected as the language to be used, an audible message "Right turn ahead" is outputted.

If the ignition switch **66** is not operated by the user **24** in step S**31** and a predetermined period of time has elapsed in step S**36**, a message "Navigation unit will be turned off to reduce battery energy consumption" is displayed on the display unit **82** in step S**37**, and then the navigation unit **84** is turned off in step S**38**.

After the electric vehicle **12** reaches the destination **30**, the electric vehicle **12** is returned to the vehicle distribution port **10**. A vehicle returning process will be described below with reference to FIG. **13**.

After driving the electric vehicle **12** to the gate **22** of the vehicle distribution port **10**, the user **24** turns off the accessories such as lights, moves the shift lever to the parking position, and turns off the ignition switch **66**. If the accessories have been turned off, the shift lever has moved to the parking position, and the ignition switch **66** has been turned off in steps S**41**, S**42**, S**43**, the IC card unit **36** records the present settings of the vehicle-mounted devices including the steering wheel **72**, the seat, etc. in the inherent IC card **32** in step S**44**, or transfers the present settings to the system controller **28**. Then, the IC card unit **36** calculates charging information based on the traveled distance and the amount of electric energy consumed from the battery **16**, records the calculated charging information in the inherent IC card **32** in step S**45** or transfers the calculated charging information to the system controller **28**.

Then, if the eject switch **63** is operated by the user **24** in step S**46**, the IC card **32** is ejected from the IC card slot **62** only when all the vehicle-mounted devices are in predetermines states in step S**47**. Specifically, the IC card **32** is allowed to be ejected from the IC card slot **62** if it is confirmed that the accessories have been turned off, the shift lever has moved to the parking position, and the ignition switch **66** has been turned off. After the IC card **32** is ejected from the IC card slot **62**, a message "Do not leave anything in vehicle" may be displayed on the display unit **82** or given as voice guidance to prompt the user not to forget things in the electric vehicle **12**.

Then, the user **24** gets off the electric vehicle **12**, closes the door, and moves to the port terminal **62**. If the door is partly open and is not locked by the door lock **60**, a message "Lock door and return vehicle" may be displayed as an image or given as a voice warning at the port terminal **26**.

After the user **24** has locked the door in step S**48**, the user **24** returns the electric vehicle **12** using the port terminal **26** in step S**49**. For example, the user **24** takes the inherent IC card **32** closely to the port terminal **26**, enabling the port terminal **26** to recognize the ID number thereof, and then operates the port terminal **26** for returning the electric vehicle **12**.

After the user **24** returns the electric vehicle **24**, the vehicle control unit **48** cancels the inhibition of the automatic driving, making the electric vehicle **24** automatically drivable in step S**50**. The inhibition of the automatic driving may be canceled after elapse of a sufficient period of time required until the vehicle returning process is completed after the IC card unit **54** has detected that the user **24** ejects the inherent IC card **32** from the IC card slot **62**.

Then, the electric vehicle **12** enters the automatic driving mode, and then is automatically returned to an empty area in the parking space **14** by the system controller **28** in step S**51**. The charger **18** is then connected to the returned electric vehicle **12**, whereupon the system control unit **40** detects that the electric vehicle **12** has been returned based on a charging start signal from the charging controller **20**, and transmits a reset signal to the electric vehicle **12**. The system control unit **40** transmits the reset signal via the communication unit **46** to the electric vehicle **12**. The vehicle control system **48** on the electric vehicle **12** receives the reset signal from the system controller **28** via the communication unit **50**, and resets the vehicle-mounted devices including the steering wheel **72**, the power seat **71**, the air-conditioning system **65**, and the radio set **67** to initial states independent of the personal data of the user **24** in step S**52**. The charger **18** then starts charging the battery **16** on the electric vehicle **12**. Then, the power supply for the control units except the remaining battery capacity detecting unit **80** on the electric vehicle **12** is turned off, and the electric vehicle **12** is in a standby state for subsequent use in step S**53**.

When personal data from the inherent IC card **32** of a next user **24** are supplied to the electronic vehicle **12** thus reset to the initial states, the electronic vehicle **12** is set to states depending on the next user **24**.

In the above vehicle returning process, the user **24** returns the electric vehicle **12** to the vehicle distribution port **10**. If the user **24** gets off the electric vehicle **12** temporarily at an arbitrary place, then the processing in steps S**49** through S**52** is not executed, and when it was confirmed in step S**48** that the door was locked, the power supply for the control units on the electric vehicle **12** is turned off in step S**53**. The

electric vehicle **12** is now in a standby state until the user **24** gets on the electric vehicle **12** again.

In the above illustrated embodiment, images are displayed on the navigation unit **84** using the selected language. Statuses of the air-conditioning system **65** and the radio set **67** and details on how to use them may be displayed and/or explained in voice guidance using the selected language.

While information as to the selected language entered by the user **24** via the port terminal **26** is transferred to the selected electric vehicle **12** via the system controller **28** in the illustrated embodiment, the information as to the selected language may be transferred from the inherent IC card **32** to the electric vehicle **12**. For example, the user **24** may select a language to be used with the port terminal **26**, and the selected language may be recorded in the inherent IC card **32**. When the selected electric vehicle **12** is automatically driven to the user **24** and the door lock is released using the inherent IC card **32**, the IC card unit **54** may read the information as to the selected language recorded in the inherent IC card **32**, and transfer the information to the navigation unit **84**. The navigation unit **84** may then display a desired image on the display unit **82** according to the selected language.

In the illustrated embodiment, the inherent IC card **32** is issued as a card key to each of the users **24**, and holds personal data. Until the vehicle sharing system according to the present invention becomes widespread in use, further efforts have to be made to study the management of personal data and charging methods. Therefore, it will take some time for the vehicle sharing system to be actually put into service. In the future, each user may possibly own its own inherent IC card **32** like bank cash cards and credit cards. Until then, some users **24** want to use the vehicle sharing system only temporarily and some users **24** want to own their inherent IC cards **32** for using the vehicle sharing system.

For using the vehicle sharing system temporarily, a common IC card as a card key may be issued for use by a plurality of users **24**, and personal data of users may be set in the selected electric vehicle **12** using the common IC card.

More specifically, before a user **24** who does not have an inherent IC card **32** rents an electric vehicle **12** at the port terminal **26**, a common IC card is issued to the user **24**. If the personal information memory **47** of the system controller **28** holds personal data in the past of the user **24**, then the personal data searched for based on the ID number of the user **24** is recorded in the common IC card, and then the common IC card is issued to the user **24**. For a user **24** who uses the vehicle sharing system for the first time, standard default values may be recorded in a common IC card, and the common IC card may be issued.

The user **24** who owns the common IC card with the personal data recorded therein can use an electric vehicle adjusted according to the recorded personal data, in the same manner as the user **24** who owns the inherent IC card **32**.

When the user **24** who uses the common IC card returns the electric vehicle **12**, the user **24** also needs to return the common IC card. At this time, the personal data recorded in the common IC card is recorded in the personal information memory **47** based on the IC number of the user **24**, and will be used when the same user **24** rents an electric vehicle **12** for the next time.

As described above, insofar as the user **24** has its own inherent IC card **32**, the user **24** can rent and return an electric vehicle **12** without any personnel attended. Therefore, the vehicle sharing system is a labor saver and can operate over an extended period of time. If a common IC card is issued to the user **24**, then it is only necessary to prepare as many common IC cards as the number of electric vehicles **12** kept in the vehicle distribution port **10**, and a quick and safe action can be taken when a common IC card is missing. Another advantage obtained when the vehicle sharing system is temporarily used is that it is simple for a user to apply for a common IC card, i.e., to obtain a membership in the vehicle sharing system.

In the above embodiment, the ID data of the user **24** are recognized by the port terminal **26** or the electric vehicle **12** using the inherent IC card **32** which is of the non-contact type. However, IC cards of the contact type which has electric contacts may be used. The vehicles used in the system according to the present invention are not limited to electric vehicles **12**, but may be hybrid vehicles which employ both electric energy and gasoline as propulsive energies.

In the vehicle sharing system according to the present invention, as described above, information as to the language used by the user, entered via the port terminal **26** (language entering means) is automatically transferred to the electric vehicle **12** (vehicle) selected by the system control unit **40** (vehicle selecting means) via the antenna **44** and the communication unit **46** (language transmitting means) and the communication unit **50** and the antenna **52** (language receiving means), and set in the navigation unit **84** (information output means) mounted on the electric vehicle **12**. Therefore, the navigation unit **84** is capable of displaying information in the language used by the user.

The navigation unit **84** (information output means) comprises map information output means for outputting map information on a geographical area where the electric vehicle **12** travels, and displays the map information in the selected language.

Although a certain preferred embodiment of the present invention has been shown and described in detail, it should be understood that various changes and modifications may be made therein without departing from the scope of the appended claims.

What is claimed is:

1. A vehicle sharing system comprising:

a plurality of shared vehicles;

a standby station for keeping said shared vehicles;

operating means for performing a lending process for the vehicles;

language entering means for entering a language used by a user;

language transmitting means for transmitting information as to the language used by the user to a vehicle;

language receiving means mounted on said vehicle for receiving the information as to the language used by the user, which is transmitted from said language transmitting means; and

information output means mounted on said vehicle for outputting information relative to said vehicle in the language received by said language receiving means;

wherein said language entering means serves as part of said operating means, and comprises means for entering the language in the lending process performed on said operating means by the user.

2. A vehicle sharing system according to claim **1**, wherein said operating means comprises vehicle selecting means for selecting the vehicle to be lent to the user, and said language transmitting means comprises means for transmitting the entered information as to the language used by the user to the selected vehicle.

3. A vehicle sharing system according to claim **1**, further comprising information holding means for holding information as to the user, wherein said operating means comprises

means for performing the lending process based on the information from said information holding means.

4. A vehicle sharing system according to claim **1**, wherein said information output means comprises map information output means for outputting map information on a geographical area where the vehicle travels.

5. A vehicle sharing system according to claim **1**, wherein said information output means comprises status display means for displaying an operation status of an air-conditioning system on said vehicle.

6. A vehicle sharing system according to claim **1**, wherein said information output means comprises means for indicating the information relative to said vehicle with a voice in the language used by the user.

* * * * *