US006279773B1

(12) **United States Patent**
Kiyota

(10) **Patent No.: US 6,279,773 B1**
(45) **Date of Patent: Aug. 28, 2001**

(54) **LID BODY OF BEVERAGE CONTAINER**

(75) Inventor: **Hozumi Kiyota**, Chiba (JP)

(73) Assignee: **Kiyota Engineering Co., Ltd.**, Chiba (JP)

(*) Notice: Subject to any disclaimer, the term of this patent is extended or adjusted under 35 U.S.C. 154(b) by 0 days.

(21) Appl. No.: **09/576,034**

(22) Filed: **May 23, 2000**

(30) **Foreign Application Priority Data**

May 26, 1999 (JP) 11-146977

(51) **Int. Cl.**[7] **A47G 19/22**
(52) **U.S. Cl.** **220/709**; 220/711
(58) **Field of Search** 220/707, 708, 220/709, 711, 714, 715, 713; 215/229, 388, 389

(56) **References Cited**

U.S. PATENT DOCUMENTS

5,203,468	*	4/1993	Hsu	220/254
5,339,982	*	8/1994	Tardie	220/708
5,346,081	*	9/1994	Lin .	
5,361,934	*	11/1994	Spence, Jr.	220/707
5,582,320	*	12/1996	Lin	220/708
5,897,013	*	4/1999	Manganiello	220/252

FOREIGN PATENT DOCUMENTS

57-186367 11/1982 (JP) .

OTHER PUBLICATIONS

English Language Abstract of JP 57–186367.

* cited by examiner

Primary Examiner—Stephen Castellano
(74) *Attorney, Agent, or Firm*—Greenblum & Bernstein, P.L.C.

(57) **ABSTRACT**

To provide the lid body of a beverage container, wherein a mouthpiece tube communicated to the beverage container is stored within a storing portion in the blocked condition by one-touch operation of an openable lid and taken out of the storing portion by one-touch operation, and the lid body of a beverage container with a cap, wherein a cap which can store the mouthpiece tube is connectably provided therein.

The lid body of a beverage container is composed of a main body portion and an openable lid mounted on the main body portion. The main body portion comprises a bowl-like storing portion for storing a mouthpiece tube.

On the other hand, the openable lid are projected a pair of connecting portions for connecting each of the switching mechanisms.

16 Claims, 10 Drawing Sheets

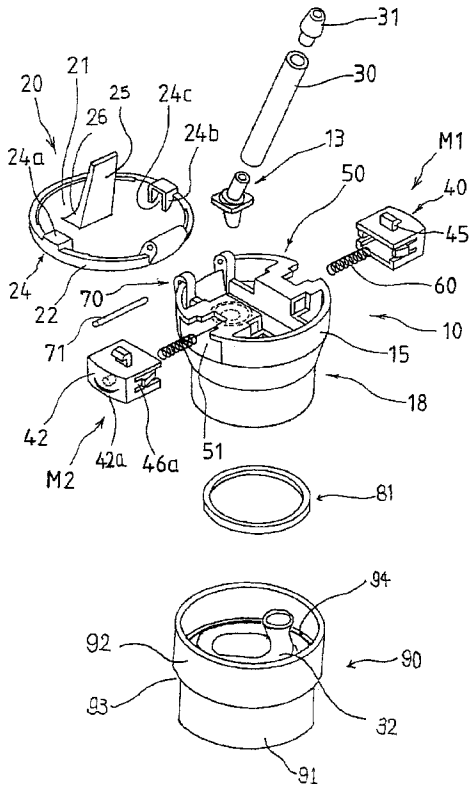

FIG. 1

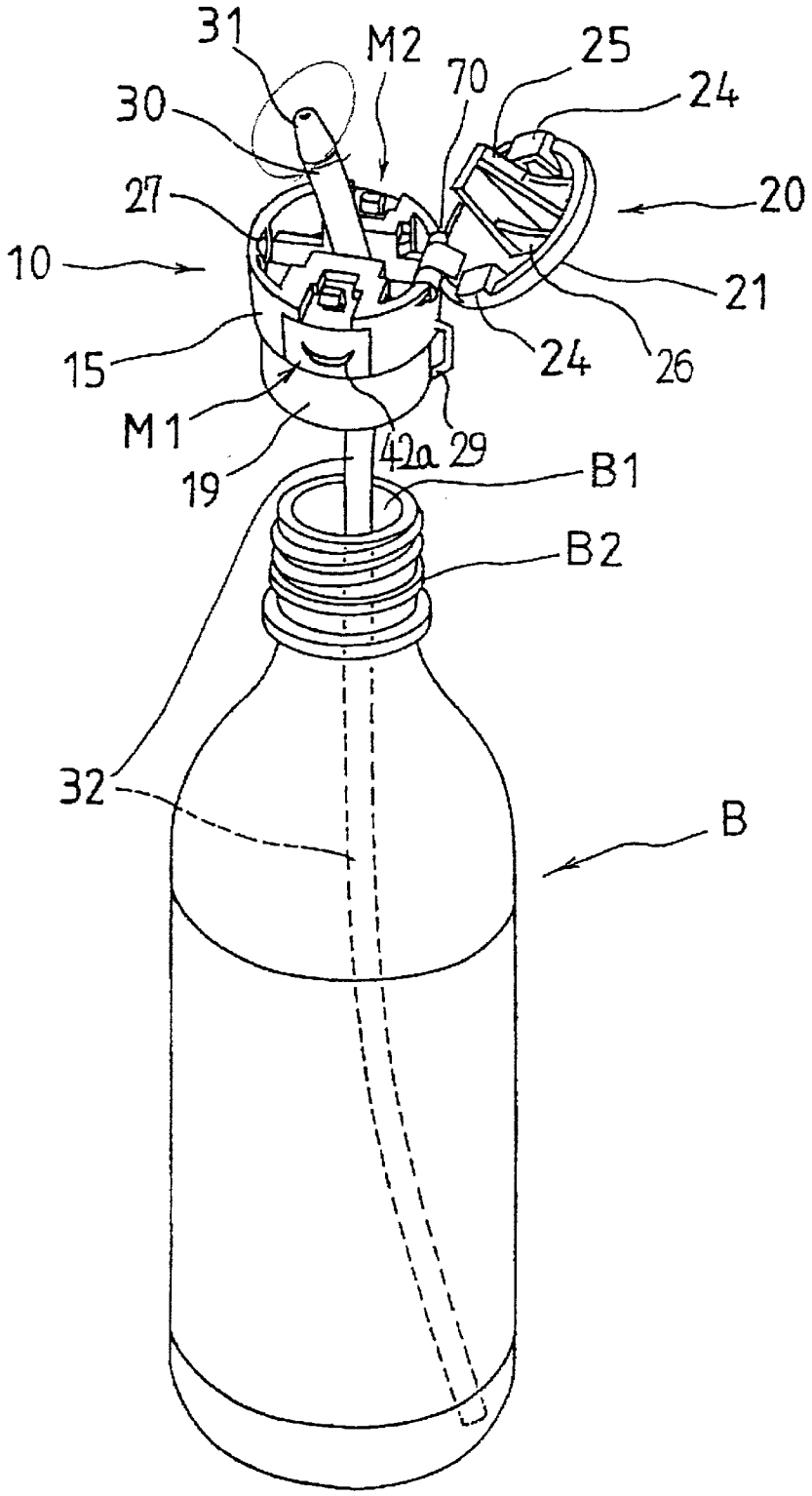

FIG. 2

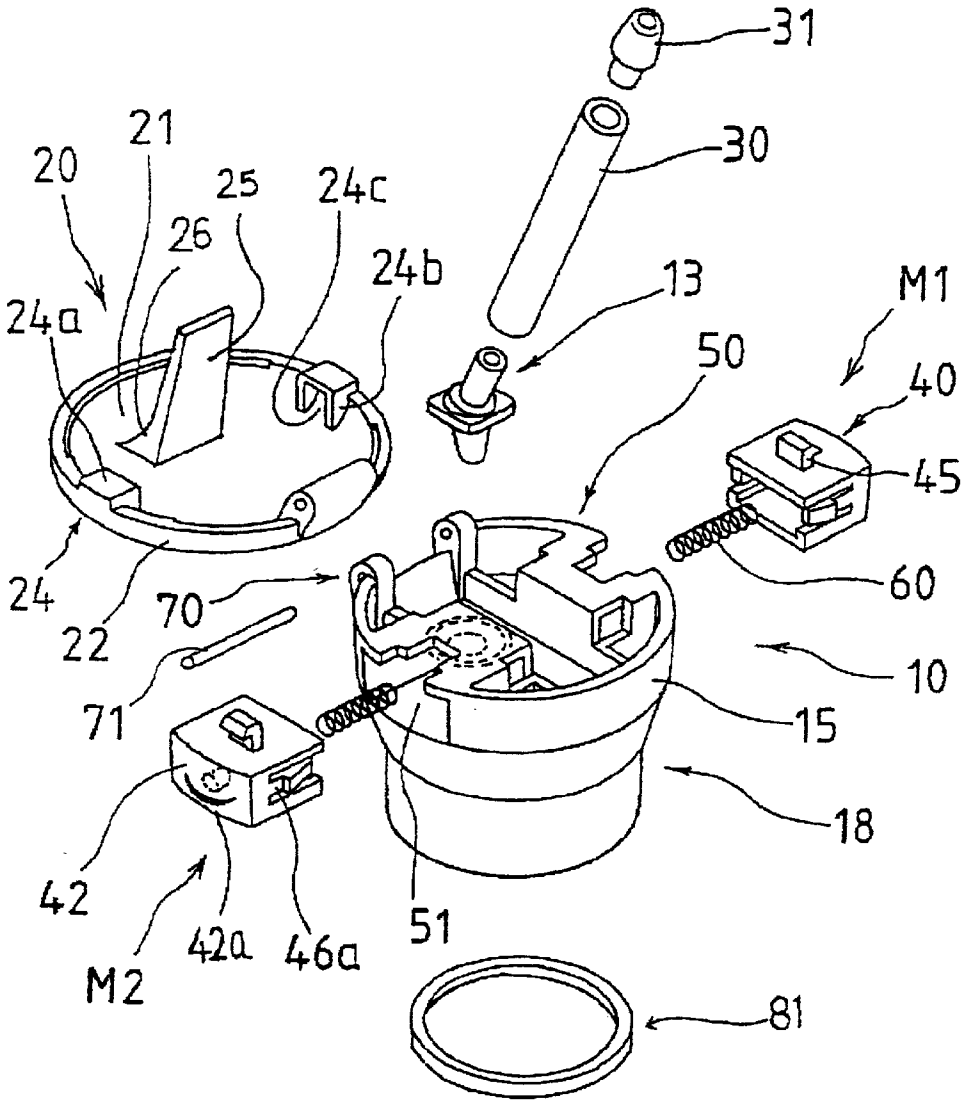
31
30
21
20
25
24c
26
24b
13
M1
24a
50
40
45
24
22
70
60
71
10
15
18
42
42a
46a
51
M2
81

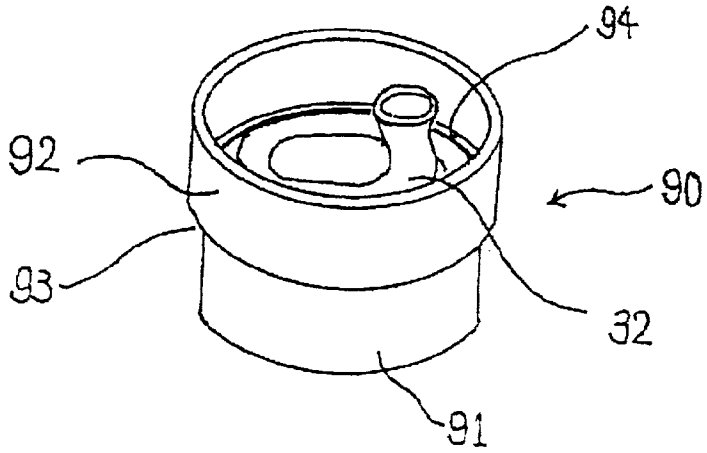
94
92
90
93
32
91

FIG. 3

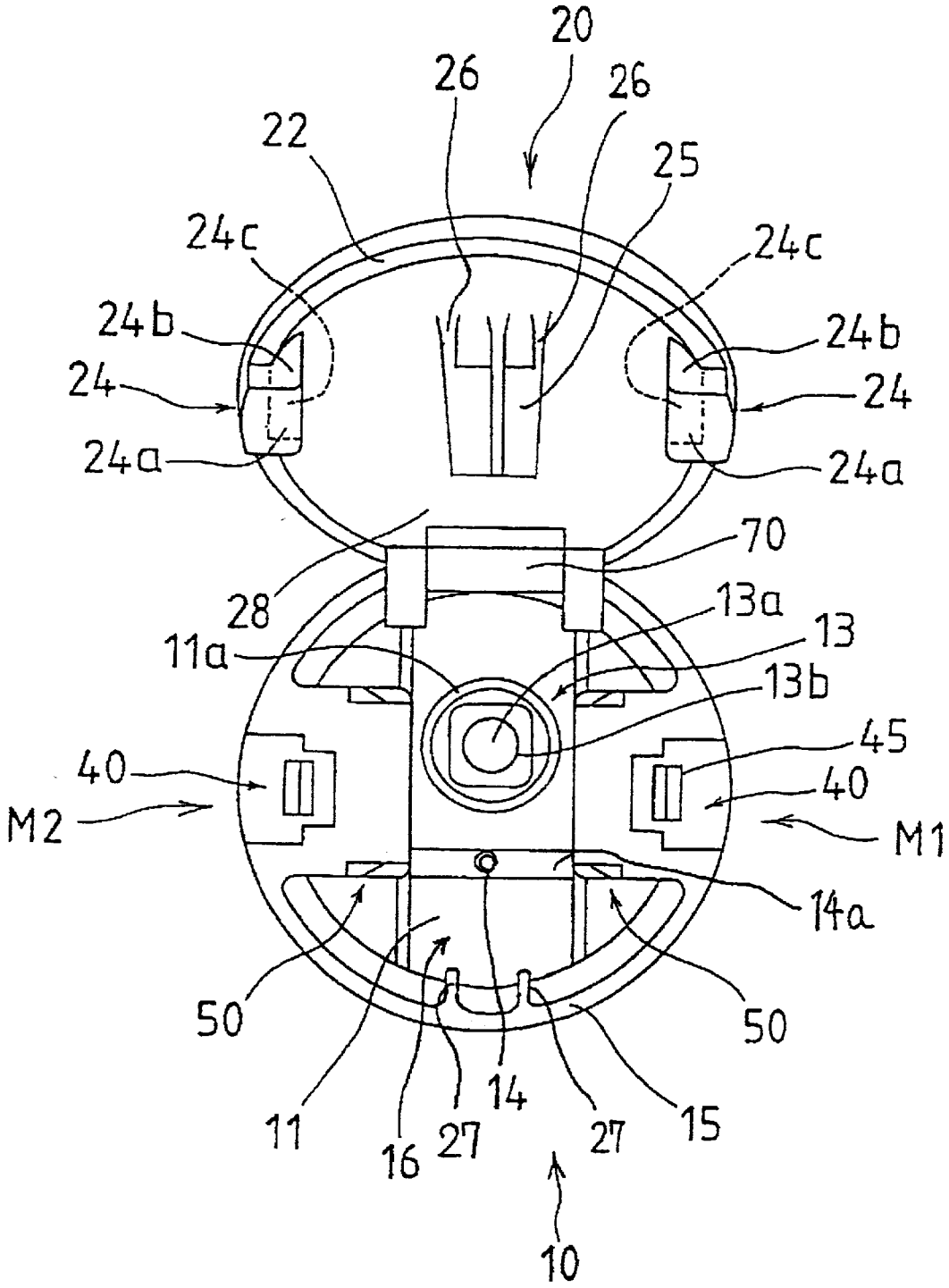
20
26
26
22
25
24c
24c
24b
24b
24
24
24a
24a
70
28
13a
13
11a
13b
45
40
40
M2
M1
14a
50
50
11
16
27
14
27
15
10

FIG. 4

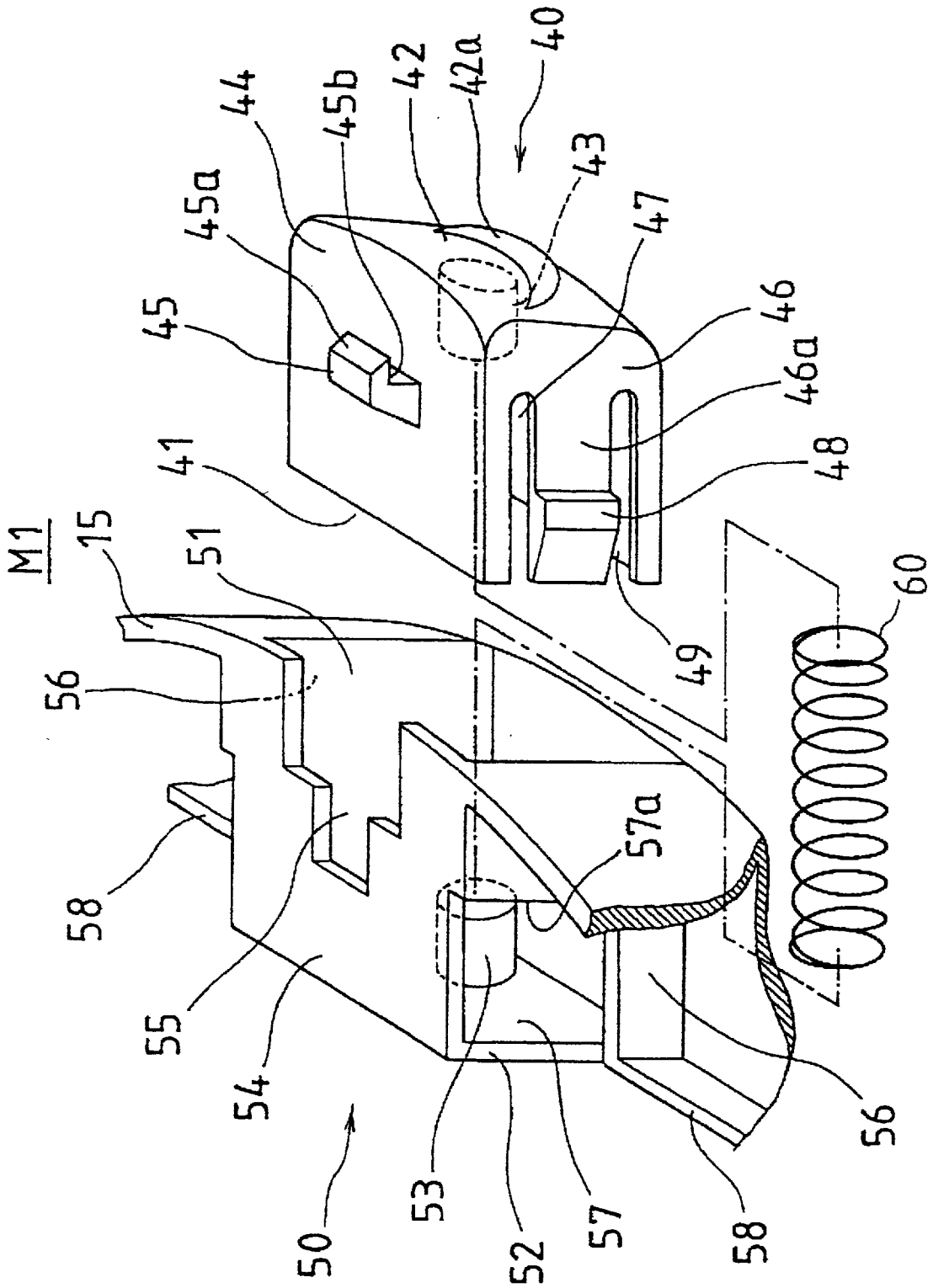
40
42a
42
45b
44
43
45a
47
45
46
46a
41
48
M1
15
51
49
60
56
57a
58
55
54
56
50
53
52
57
58

FIG. 5

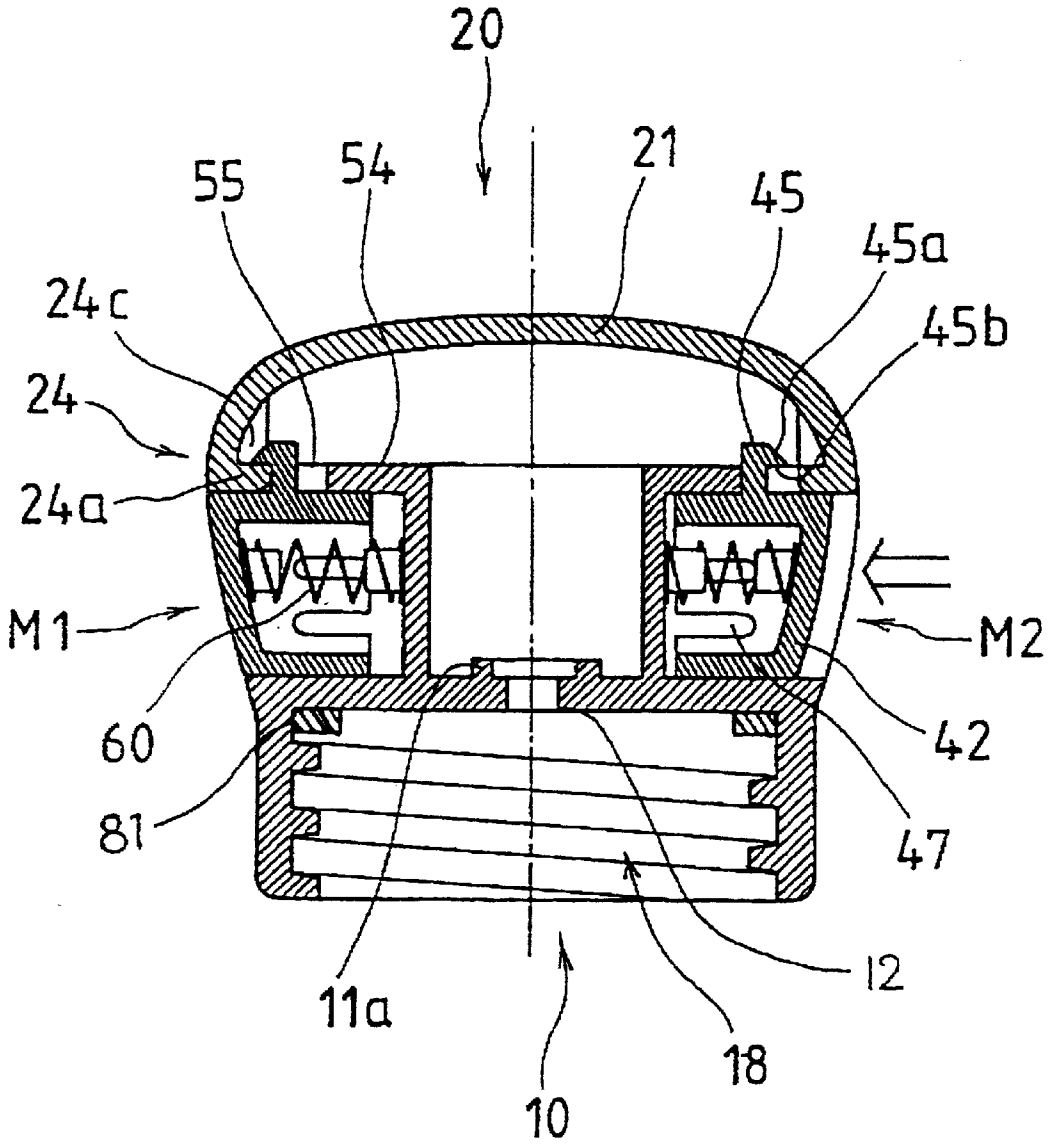

FIG. 6

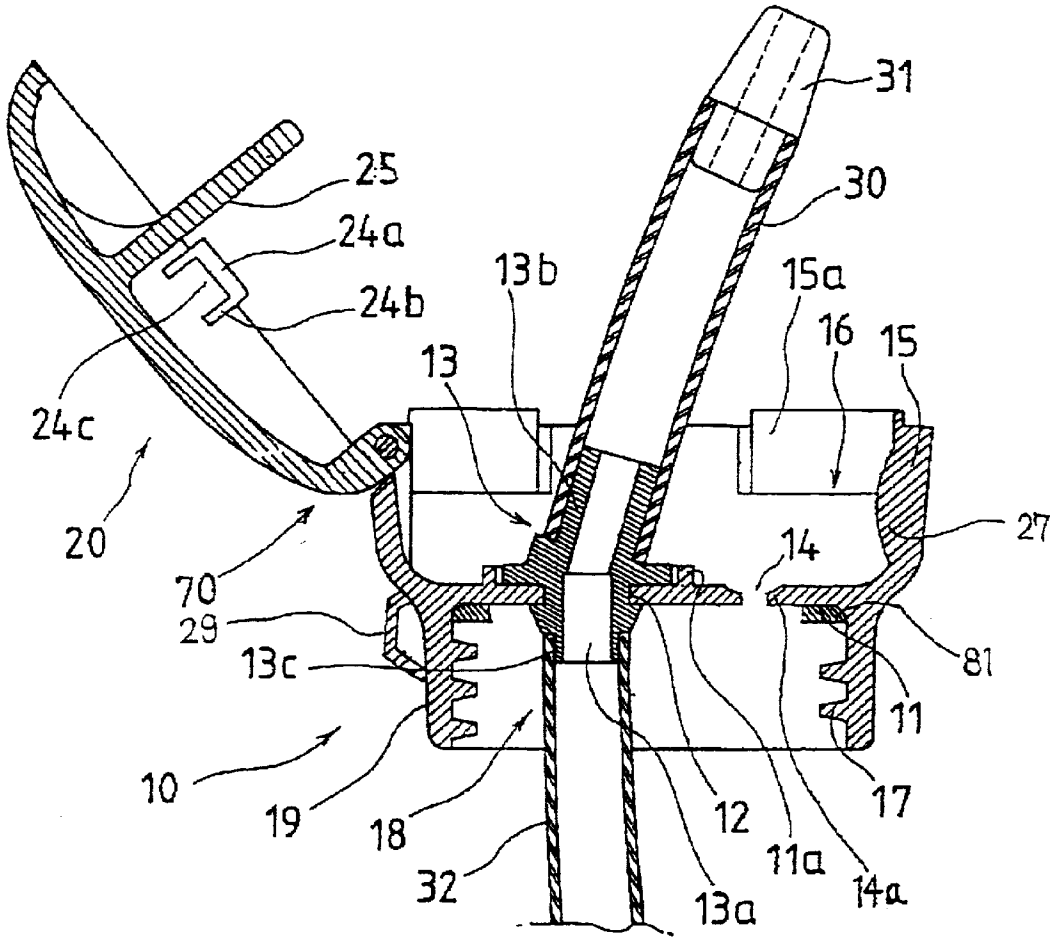
31
30
25
24a
24b
24c
13b
15a
16
15
13
20
70
29
13c
10
19
18
32
27
14
81
11
17
12
11a
14a
13a

FIG. 7

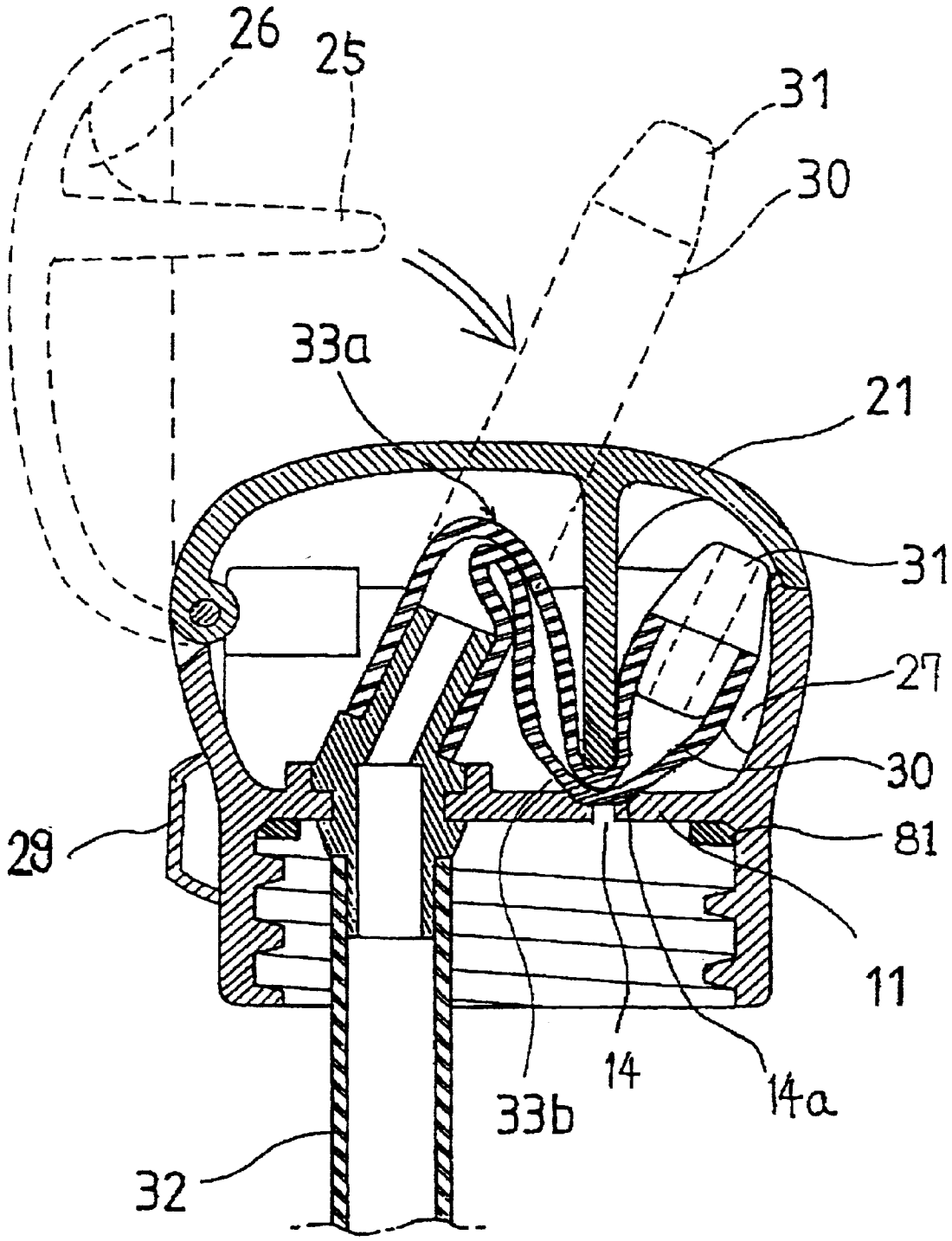

FIG. 8

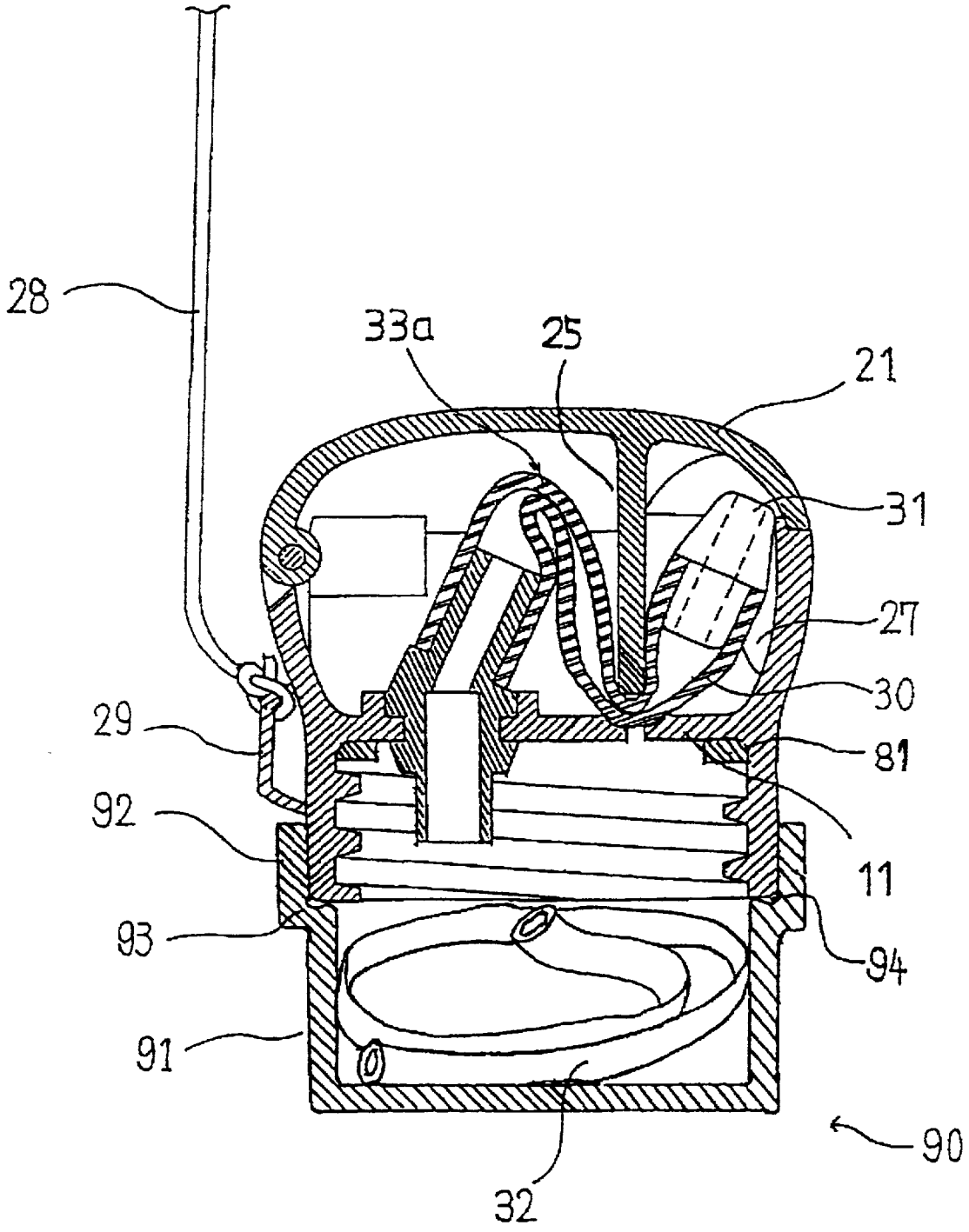

FIG. 9

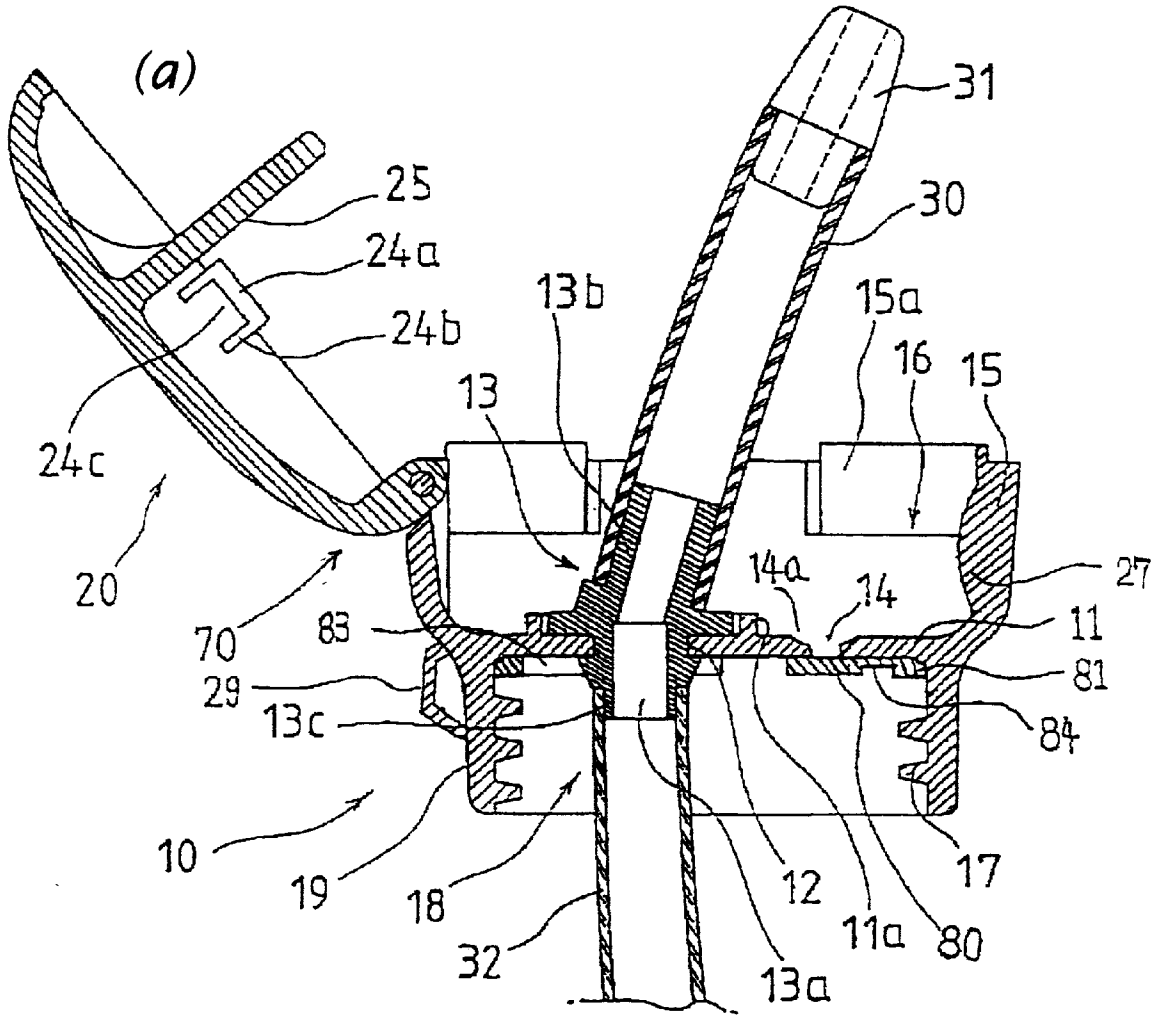
(a)
31
30
25
24a
24b
24c
13b
15a
16
15
13
20
70
83
14a
14
27
11
81
29
13c
84
10
19
18
12
17
11a
80
32
13a

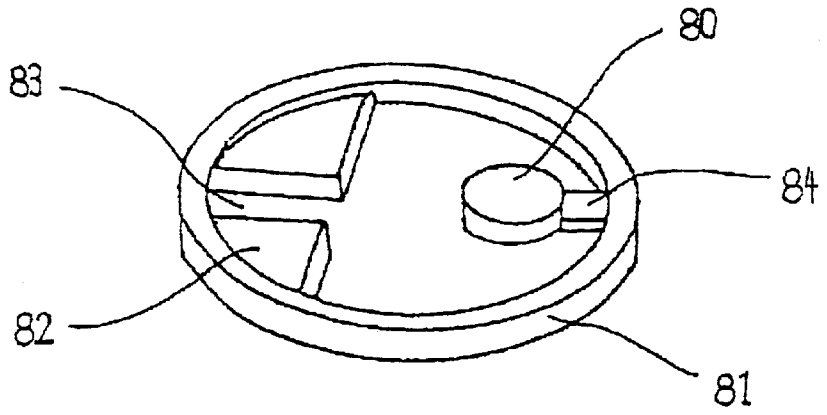
(b)
80
83
84
82
81

FIG. 10

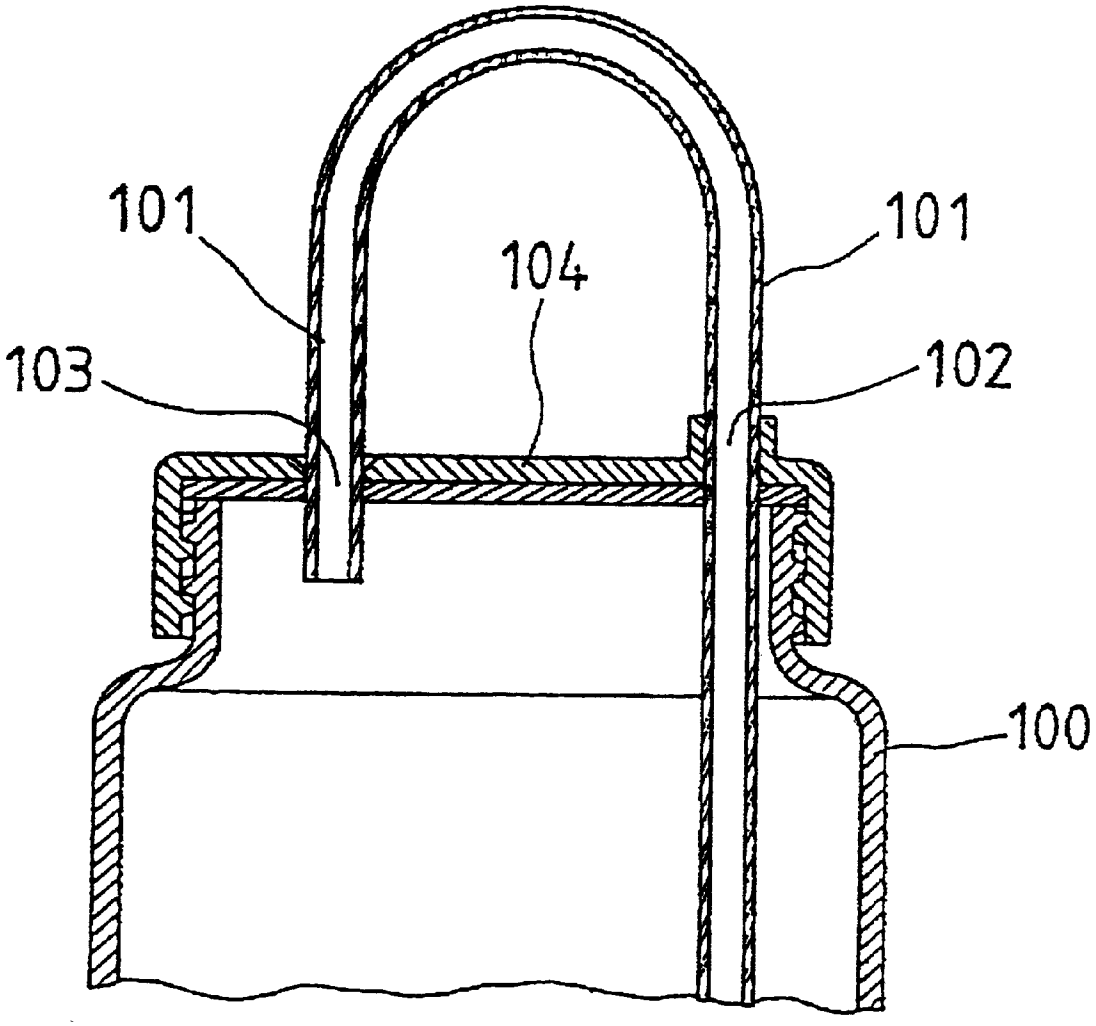

LID BODY OF BEVERAGE CONTAINER

TECHNICAL FILED

This invention relates to a lid body detachably mounted on the mouth portion of a beverage container, and to a lid body with a cap provided with a cap connectable with the lid body. More particularly, the invention relates to a plastic lid body provided with a mouthpiece tube for easily drinking a beverage without removing the lid body mounted on the mouth portion of a container, and to a lid body with a cap comprising the lid body and a cap connectable with the lid body and storing a suction tube for sucking a beverage within a beverage container connectable with a mouthpiece tube provided in the lid body.

BACKGROUND ART

In recent years, with an affluent standard of national living, each kind of beverages has been sold and natural drinks and each kind of tea and the like are developed with rapid force combined with a healthy food boom. Particularly, natural drinks contained in plastic containers such as plastic (PET) bottles and the like have become essential daily goods around the young age group, and living necessaries among not only household but also working place and pleasure resort. Moreover, in each kind of sports such as tennis, soccer and the like, active supply of water is recommended in the midst of sports, and various sports drinks are offered.

However, as the lid body of a beverage container containing these beverages is a screw type, in case of drinking several times after opening the lid, it is necessary to completely screw the lid on the mouth portion of the beverage container every time when a beverage is drunk, and its handling is troublesome, and it is difficult to completely open or seal the lid body in one hand, so that a beverage cannot simply be drunk from a beverage container in the midst of sports, cycling, driving and the like or by patients having handicapped hands.

Moreover, as the mouth portion of a beverage container is wide, it is difficult to suck, and as a result, a mouth is directly applied to the mouth portion of a container and the container is tilted for guzzling, or a beverage is poured into a receiver such as cup, bowl and the like for drinking. However, direct drinking is insanitary, and inconvenient such as choking or spluttering with excessive beverage.

Furthermore, a drinking style of pouring into a receiver always requires the receiver, and in case of pouring into the receiver, there are such problems that if a beverage container is hastily tilted, a beverage is forcibly discharged to overflow from the receiver and the like.

In order to dissolve such inconvenience, as shown in FIG. **10**, there is known such a type that on a screw portion of a mouth portion of a beverage container **100** after opening is screwed a lid body **104** bored a hole **102** for mounting a straw **101** and a through-hole **103** for inserting the other end side of the straw **101** nakedly projected out of a main body of the beverage container, one end side of the flexible straw **101** is inserted from the hole **102** for mounting the straw into the beverage container, the other end side of the straw is projected out of the container as a suction portion in use, while the other end side of the nakedly projected straw is inserted into the through-hole **103** in non-use. (Japanese Utility Model Publication No. 57-186367)

According to the above type, it becomes possible to suck a necessary amount of a beverage from a suction portion of the straw **101** without tilting the beverage container **100**, and, in case of non-use, the other end side of the straw corresponding to the suction portion is inserted into the through-hole **103**, thereby preventing the suction portion from adhering to dirt, dust and the like.

However, according to such prior art, it is necessary to use both hands for removing the straw **101** from the through-hole **103** of the lid body **104**, or inserting the straw into the through-hole **103**, particularly, as a diameter of the through-hole **103** is small, it is difficult to align the through-hole with the straw **101**, and it is inconvenient to use it in the midst of body movement such as walking, exercising and the like.

Moreover, at the time of non-use, the straw **101** is largely projected in reverse U-shape onto the surface of the lid body **104** between the hole **102** and the through-hole **103**, and as there is no means for fixing and holding the straw **101** in the through-hole **103**, when the projected portion of the straw **101** hits on some object during carrying, or the container is vigorously swung vertically or unexpectedly falls, there was a possibility of slipping the other end side of the straw **101** out of the through-hole **103** and leaking the beverage to the outside.

Furthermore, the straw **101** inserted into the beverage container is one flexible long tube, and there is no means for supporting and fixing the straw in the hole **102** of the lid body **104**. Therefore, when the suction portion of the straw is unconsciously bitten or pulled at the time of sucking and drinking, length or direction of the suction portion projected from the container is changed, and it is inconvenient for confirming the position of the suction portion every time when drinking.

Moreover, since the straw **101** was carried under the condition of inserting into the hole **102** of the lid body **104** or removing therefrom until it was mounted onto the beverage container, the straw **101** was easily lost, and the nakedly protruded straw **101** was insanitary.

Then, the invention relates to a lid body of a beverage container detachably mounted on a mouth portion of the beverage container, more particularly, relates to a lid body of a beverage container with a mouthpiece tube which can be handled by one hand even in the midst of moving the body such as sports, cycling, drive and the like, or even by a patient who is hard to freely use his hands.

An object of the invention is, in view of the problems of such prior art, to provide a sanitary lid body of a beverage container having a storing portion for storing a mouthpiece tube for sucking and drinking a beverage and an openable lid for opening and closing the storing portion.

Further, another object of the invention is to provide a lid body of a beverage container which is easily handled such that the mouthpiece tube is stored within the main body portion with lid-closing operation of the openable lid by one touch, and is released and standing from the storing portion with lid-opening operation of the openable lid by one touch.

Further, a further object of the invention is to provide a lid body of a beverage container without leaking a beverage by storing the mouthpiece tube within the main body of the lid body in the folded state even when the beverage container falls or is vigorously swung vertically.

Moreover, a more further object of the invention is to provide a lid body of a beverage container which can easily be handled by anybody who is troubled with eyesight and the blind.

Further, another object of the invention is to provide a lid body of a beverage container which lid body is conveniently carried.

Further, a further object of the invention is to provide a lid body with a cap, wherein the cap for storing a suction tube connectable with a mouthpiece tube provided in the lid body of the beverage container for sucking a beverage is connectably provided in the lid body.

DISCLOSURE OF THE INVENTION

In order to attain such objects, the invention notices elasticity and flexibility of a mouthpiece tube, and constructs a standing mouthpiece tube to be compactly folded and stored in the blocked state against its elasticity at the time of non-use, and the mouthpiece tube to be stood with its elasticity by releasing the stored state at the time of use.

Moreover, at the time of non-use, it is constructed to block a through-hole provided in a baseplate of the storing portion for storing the mouthpiece tube with a tube wall of the folded mouthpiece tube.

Moreover, the mouthpiece tube provided in the lid body comprises a cap for sorting a connectable suction tube, for example, until the lid body is mounted on a beverage container, there is constructed the suction tube to be stored in the cap and the cap is fitted to the outer periphery of the thread portion of the lid body.

In concrete terms, the lid body for mounting the mouth portion of the beverage container is composed of a main body portion and an openable lid openably mounted on the main body portion, and the main body portion is composed of a storing portion for storing a mouthpiece tube and a thread portion for threading to the mouth portion of the beverage container.

The storing portion and the thread portion are arranged with a common baseplate in opposite directions, and through the baseplate is passed a coupling tube passing through the storing portion and the thread portion. The coupling tube projected into the storing portion is detachably connected to the base end side of the mouthpiece tube projected from the storing portion, and the coupling tube projected into the thread portion is detachably connected to the end side of the suction tube inserted into the bottom within the beverage container, respectively. Therefore, when a mouthpiece portion is held in mouth for sucking, a beverage within the beverage container rises within the suction tube and is sucked via the coupling tube and the mouthpiece tube.

The storing portion is bowl-like shaped provided with a peripheral wall portion expanded from the baseplate to the outside. A portion opposed to a radial direction of the peripheral wall portion is provided with a pair of switching devices for controlling opening and closing an openable lid.

Each switching device has a socket integrally molded with the peripheral wall portion and a lock release button movable within the socket against spring force. At the back of the openable lid is provided a pair of connecting portions connectable with each lock release button, and when the openable lid is closed, each connecting portion is connected with the respectively corresponding lock release button of the switching device to maintain the blocked condition of the openable lid, and when a pair of lock release buttons is depressed against spring force, the connected condition is released and the openable lid opens.

At an upper edge of the peripheral wall portion directly intersecting at a straight line connecting a pair of switching devices each other is secured an openable lid provided with a hinge portion. From the back of the openable lid, with lid-closing action of the openable lid, is pushed a mouthpiece tube under the blocked state within the storing portion, thereby projecting a presser piece standing by elasticity of the mouthpiece tube with lid-opening action of the openable lid.

The cap is an almost cylindrical member opened at one end surface connectably provided in the lid body. The cap is provided with a container portion, and within the container portion is stored a suction tube connectable with a coupling tube projected within the thread portion at the base end portion and inserted into the beverage container at the other end. There is formed a cylindrical standing wall stood upward through a step portion from the container portion, and the inner surface of the standing wall is fixed into the outer peripheral surface of the thread portion.

BRIEF DESCRIPTION OF THE DRAWING

FIG. **1** is a perspective view showing the lid body of the beverage container of the invention.

FIG. **2** is a perspective view exploding the lid body of the beverage container of the invention.

FIG. **3** is a plane view showing the opened lid body of the beverage container of the invention.

FIG. **4** is a schematically exploded view of one switching mechanism arranged on the lid body of the beverage container of the invention.

FIG. **5** is a schematically longitudinal section showing the connecting condition between the connecting portion and the switching mechanism of the lid body of the beverage container of the invention (left side is complete connection and right side is connection release).

FIG. **6** is an expanded sectional view diagram showing the opened openable lid of the lid body of the beverage container of the invention.

FIG. **7** is an expanded sectional view diagram showing the opened condition to the closed condition of the openable lid of the lid body of the invention (a chain line shows the state of the opened lid, and a full line shows the state of the closed lid).

FIG. **8** is an expanded sectional view diagram showing the condition of securing the cap stored suction tube to the lid body of the beverage container of the invention and tying a suspension strap to the main body portion.

FIG. **9** is an expanded sectional view showing another embodiment of the annular packing mounted on the lid body of the beverage container of the invention (FIG. **9**(*a*) is a phase diagram showing the annular packing mounted on the lid body, and FIG. **9**(*b*) is a perspective view of the annular packing).

FIG. **10** is a fragmentary sectional view of the lid body of the beverage container for showing prior art.

DESCRIPTION OF THE PREFERRED EMBODIMENTS

FIG. **1** shows a perspective view of the lid body of the invention removed from a beverage container. Moreover, a cap **90** for storing a suction tube **32** is omitted. The lid body of the invention is composed of a main body portion **10** threaded in a mouth portion B**1** of a beverage container B and an openable lid **20** openably mounted on the main body portion **10** via a hinge portion **70**.

The container B, for example, is a plastic bottle having the mouth portion B**1** at the upper part, and at the outer periphery of the mouth portion B**1** is formed a male screw portion B**2**. The main body portion **10** and the openable lid **20** are molded with synthetic resin material having appropriate elasticity such as polypropylene, ABS resin and the like.

The main body portion **10** is divided into a storing portion **16** positioned upward from a baseplate **11** and a thread

portion **18** positioned downward by a baseplate **11**, and the storing portion **16** is shaped bowl-like having a peripheral wall portion **15** expandably rising from the periphery of the baseplate **11** to the upper part. The inner wall of the peripheral wall portion **15** is provided with a plurality of standing edges **15***a* slightly projected from the peripheral wall portion **15** (FIG. **6**).

On the other hand, a thread portion **18** is shaped cylindrical having a skirt portion **19** suspending downward from the periphery of the baseplate **11**, and the inner wall of the skirt portion **19** is provided with a female screw portion **17** threaded with the male screw portion B1 of the container B. Further, into a corner periphery of the baseplate on the side of the thread portion **18** is detachably inserted an annular packing **81** for sealing the upper edge of the mouth portion B1 of the beverage container.

Moreover, the baseplate **11**, the peripheral wall portion **15**, the female screw portion **17** and the skirt portion **19** for composing the main body portion are integrally formed with the above-described synthetic resin material.

In the baseplate **11** are provided a communicating hole **12** and an air hole **14** for communicating the storing portion **16** and the thread portion **18**. The air hole **14** opened to the side of the storing portion **16** is provided at about the center of a groove portion **14***a* formed in the baseplate **11**, and the groove portion **14***a* is formed into such form that the upper end edge of a presser piece **25**, which will be explained later on, can be fixed by keeping a slight space.

At the periphery of the communicating hole **12** opened to the side of the storing portion **16** is projected an annular rib **11***a* for reinforcement, while at the inner periphery of the communicating hole **12** is detachably fixed a coupling tube **13**. The coupling tube **13** is composed of a first coupling tube **13***b* projected into the storing portion **16** and a second coupling tube **13***c* projected into the thread portion, and provided with a flow hole **13***a* passed through the center portion in a vertical direction (FIG. **3**, FIG. **6**).

The first coupling tube **13***b* is composed by tilting its open end in the direction far away from the hinge portion **70** of the openable lid **20**. To the first coupling tube **13***b* is detachably fixed the base end portion of a mouthpiece tube **30**. Further, to the second coupling tube **13***c* is detachably connected the base end portion of the suction tube **32** inserted into the bottom of the beverage container B. Moreover, at the end of the mouthpiece tube **30**, if necessary, can be fixed a mouthpiece portion **31** tapered into the end portion.

In addition, the mouthpiece tube **30** and the suction tube **32**, for example, are formed into tubes with elastic and flexible synthetic resin material such as polyurethane, silicon resin and the like (FIG. **6**).

FIG. **2** is a perspective view showing an openable lid **20**, a pair of switching devices M1, M2 and a coupling tube **13**, a mouthpiece tube **30**, a packing **81** and a cap **90** for storing a suction tube **32** removed from a main body portion **10**, and FIG. **3** is a plane view showing the state of opening the openable lid **20** from the main body portion **10**.

The pair of switching devices M1, M2 for controlling opening and closing of the openable lid **20** is provided at a notch portion of the peripheral wall portion **15** opposed to the radial direction of the storing portion **16**. Further, each switching device M1, M2 is made of the same member arranged in opposition to each other, hence one switching device M1 will be explained in detail.

FIG. **4** is a perspective view showing the state of disassembling a socket **50** of the switching device M1 and a lock release button **40**.

The switching device M1 is composed of a socket **50** and a lock release button **40** movably fixed within the socket. The socket **50** is an integrally molded member composed of a pair of side plates **56**, **56** projected from both sides of the notch portion of a peripheral wall portion **15** to the inner side of a storing portion **16**, a back plate **52** provided between the projected portions of each side plate **56**, **56**, and an upper plate **54** covering the surfaces of each side plate **56**, **56**. The side surface portion opposed to the back plate **52** is made an opening portion **51**, and the lock release button **40** is movably fixed through the opening portion **51**.

A convex type notch **55** is provided in the upper plate **54** from the opening portion **51** toward the back plate **52** direction. Further, corner portions of both the side plates **56**, **56** made contact with the back plate **52** and the upper plate **54** are rectangularly notched, so as to form notched windows **57**, **57** having edge portions **57***a*, **57***a* connected with stopper protrusions **48**, **48** formed in the lock release button **40** which is described later on.

From both the side plates **56**, **56** positioned downward the notched windows **57**, **57** are stretched to the outside direction on the same face with the back plate **52** and projecting pieces **58**, **58** connected to the inner peripheral wall **15** at the end portion are integrally projected and molded. Further, within the inner face of the back plate **52** is provided a protrusion **53** for inserting and fixing one end portion of a spring **60**.

On the other hand, the lock release button **40** is almost a box type member integrally molded with an upper plate **44**, a pair of side plates **46**, **46**, a baseplate **49** and a pressure wall **42**, and a side face portion opposed to the pressure wall **42** is an opening portion **41**.

From the upper plate **44** is projected a hook-like stopper piece **45** having an inclined face **45***a* attached to a connecting portion **24** of the openable lid **20**, which will be described later on, and a lower edge portion **45***b* coupled with the connecting portion **24**.

In both the side plates **46**, **46** are bored a pair of upper and lower notched grooves **47**, **47** from the opening portion **41** toward the pressure wall **42**, and overhanging pieces **46***a*, **46***a* are formed between the notched grooves **47**, **47**. At the end portions of the notched grooves **47**, **47** are formed stopper protrusions **48**, **48** protruded each other outwardly, and the stopper protrusions **48**, **48** are detachably connected to edge portions **57***a*, **57***a* of the notched windows **57**, **57** provided in the socket **50**.

An outer surface of the pressure wall **42** is curved to almost the same surface with the peripheral wall portion **15**, and on the outer surface is formed a protrusion for identifying the position of the lock release button **40** with the inner surface of a finger or an identification portion **42***a* consisting of a protrusion. (In FIG. **4**, a crescent-shaped projection is formed.) Further, the inner wall of the pressure wall **42** is provided with a protrusion **43** for inserting and fixing the other end portion of a spring **60**.

Assembling of the lock release button **40** and the socket **50** is explained. The lock release button **40** is fitted within the opening portion **51** of the socket **50** under the condition of inserting one end portion of the spring **60** into the protrusion **43** of the lock release button **40** and the other end portion into the protrusion **53** of the socket **50**. As ends of each overhanging piece **46***a*, **46***a* formed in both the side plates **46**, **46** of the lock release button **40** are free ends, each overhanging piece **46***a*, **46***a* is slightly bent each other in the inner side direction and inserted into the socket **50**, and each stopper protrusion **48**, **48** formed in each overhanging piece

46*a*, 46*a* is inserted into each notched window **57**, **57** through the back sides of both the side plates **56**, **56**.

The lock release button **40**, by energization force of the spring **60**, in FIG. **4**, moves to the right direction, but each stopper protrusion **48**, **48** is protruded from each notched window **57**, **57**, so that each stopper protrusion **48**, **48** is connected to each edge portion **57***a*, **57***a* of the notched windows **57**, **57**, respectively, so as not to slip away from the socket **50**.

Moreover, the stopper piece **45** is projected from the upper plate **44** of the lock release button **40**, but a convex type notched inlet **55** is formed on the upper plate **54** of the socket **50**, so as to have no influence on assemblying the lock release button **40**. Further, the lock release button **40** can move until the stopper piece **45** is made into contact with the innermost portion (left inner part in FIG. **4**) of the convex notched inlet **55** against energization force of the spring **60**.

Next, the openable lid **20** will be explained.

The openable lid **20** is openably pivoted on the upper peripheral wall portion **15** of the main body portion **10** by a pivot pin **71** provided in the hinge portion **70**, and has a top board **21** which cross section is slightly curved downward and a peripheral edge portion **22** formed in the periphery of the top board **21** (FIG. **2**, FIG. **3**).

A pair of connecting portions **24**, **24** is provided on the peripheral portion **22** of the top board **21** corresponding to the pair of switching devices M1, M2. Each connecting portion **24**, **24** is composed of receiving pieces **24***a*, **24***a* projected from the peripheral portion **22** to the radial direction, respectively, and a pair of ribs **24***b*, **24***b* for supporting the receiving pieces **24***a*, **24***a* from the back of the top board **21**, and depressions **24***c*, **24***c* are formed between the top board **21** and the receiving pieces **24***a*, **24***a*.

FIG. **5** is a longitudinal section showing the state of closing the openable lid **20** in the main body portion **10**, the left side of the same drawing shows the state of completely connecting the connecting portion **24** of the openable lid **20** to the switching device M1, and the right side of the same drawing shows the state of immediately after disconnecting the connecting portion **24** from the switching device M2, respectively.

As soon as the openable lid **20** is started to close, the end edges of each receiving piece **24***a*, **24***a* press hook-like inclined faces **45***a*, **45***a* of each stopper piece **45**, **45** of each lock release button **40**, **40** in the inside direction of the sockets **50**, **50** against energization force of the springs **60**, **60** with pressure.

Then, when the end edges of each receiving piece **24***a*, **24***a* are passed each inclined face **45***a*, **45***a*, each lock release button **40**, **40** moves in the direction parting from respective sockets **50**, **50** by energization force of the springs **60**, **60**, so that the lower edge portions **45***b*, **45***b* of each stopper piece **45**, **45** are fitted and connected within depressions **24***c*, **24***c* of each connecting portion **24**, **24** (left drawing of FIG. **5**). Thereby, each connecting portion **24**, **24** is completely connected with each lock release button **40**, **40** to completely close the main body portion **10** by means of the openable lid **20**.

In order to open the openable lid **20**, each pressure wall **42**, **42** is pressed with pressure against energization force of each spring **60**, **60**, and the lock release buttons **40**, **40** are moved in the inside direction of the sockets **50**, **50**. (arrow direction of FIG. **5**) Each stopper piece **45**, **45** is moved in the same direction by this pressure, the lower edge portions **45***b*, **45***b* of each stopper piece **45**, **45** are separated from depressions **24***c*, **24***c* of each connecting portion **24**, **24**. Thereby, each connecting portion **24**, **24** is released from connection with each lock release button **40**, **40**.

On the back of the top board **21** is projected a presser piece **25** in parallel to the hinge portion **70**. The presser piece **25** is composed of a flat plate body at the upper edge, while on the inner wall of the storing portion **16** opposed to the presser piece **25** are projected a pair of guide ribs **27**, **27** for guiding a mouthpiece tube **30** folded by the presser piece **25**.

Further, the base of the presser piece **25** is provided with a plurality of ribs **26** for projectingly supporting the presser piece **25** (FIG. **2**, FIG. **3**).

Around the outer periphery of the thread portion **18** of the main body portion **10** is fittingly arranged the cap **90** for storing the suction tube **32** within the inside. The cap **90**, for example, is a cylindrical member opened at one end portion molded with plastic material having appropriate elasticity such as polypropylene, ABS resin and the like.

The cap **90** comprises a container portion **91** for storing the suction tube **32** detachably connected to the second coupling tube **13***c* at the base end portion and inserted into the bottom within the beverage container B at the end portion and a cylindrical standing wall **92** stood from the opening portion of the container portion **91** via the annular step portion **93** and fitted to the outer peripharal surface of the thread portion **18**.

Further, in order to closely adhere and fit the inner surface of the standing wall **92** to the outer peripheral surface of the thread portion **18**, the inner wall of the step portion **93** is formed with the annular groove **94** for deforming the standing wall **92** slightly in the radial direction (FIG. **2**, FIG. **8**).

Moreover, in order to easily carry the lid body of the beverage container without losing, the main body portion **10** is provided with a stopper piece **29** for tying a suspending strap **28**, and the other end portion of the suspending strap **28** is formed with appropriately shaped hook and loop portions for suspension.

Next, an embodiment of using the lid body of the invention is explained.

First, under the condition of coupling the mouthpiece tube **30** with the first coupling tube **13***b*, the openable lid **20** is closed and the mouthpiece tube **30** is stored within the storing portion **16**, while the annular packing **81** is inserted into the corner periphery of the baseplate on the side of the thread portion **18**. Then, the cap **90** stored the suction tube **32** in the container portion **91** is fitted to the outer periphery of the thread portion **18**. Under this condition, the lid body of the invention is prepared.

In addition, in order to make carrying the container easily, it is preferable to tie the suspending strap **28** to the stopper piece **29** (FIG. **8**).

In case of use, the cap **90** is removed from the thread portion **18**, the suction tube **32** is taken out of the container portion **91**, and the base end portion is connected to the second coupling tube **13***c*. Then, the end portion of the suction tube **32** is inserted into the beverage container B, the female screw portion **17** formed in the inner wall of the skirt portion **19** of the lid body is fitted in the male screw portion B2 of the mouth portion B1 of the beverage container B, and the upper edge of the mouth portion B1 and the thread portion **18** are fitted and hermetically sealed via the annular packing **81**.

In this condition, when the beverage container B is held by one hand, and the pressure walls **42**, **42** of the lock release buttons **40**, **40** are simultaneously depressed in the radial

direction, the lock release buttons **40**, **40** move in the inside direction of the sockets **50**, **50** against energization force of the springs **60**, **60** (arrow direction of FIG. **5**).

As each of the above stopper pieces **45**, **45** moves in the same direction at the same time, the lower edge portions **45***b*, **45***b* of each stopper piece **45**, **45** are slipped away from the depressions **24***c*, **24***c*. Because the mouthpiece tube **30** is stored within the storing portion **16** under the forced and folded condition, when the lower edge portions **45***b* and **45***b* are separated from the depressions **24***c*, **24***c*, the mouthpiece tube **30** pushes the top board **21** by its elastic force, automatically opens the openable lid **20** with pressure and stands by outwardly projecting from the storing portion **16**. Since the first coupling tube **13***b* is tilted in the direction apart from the hinge portion **70** at the open end, the end portion of the mouthpiece tube **30** is projected at the position far from the openable lid **20** (FIG. **6**).

Moreover, when the mouthpiece portion **31** consisting of comparatively hard synthetic resin material is inserted in the end of the mouthpiece tube **30**, the mouthpiece tube **30** is slightly bent by weight of the mouthpiece portion **31**, so that the mouthpiece portion **31** can easily be taken in mouth, but even if there is no mouthpiece portion **31**, sucking and drinking is not inconvenient.

Further, even if the beverage is sucked and the internal pressure of the beverage container B is lowered, the internal pressure of the beverage container B becomes equal to the external pressure to make drinking smooth because the air hole **14** is formed.

Next, in case of non-use, that is, the case of closing the openable lid **20** by drinking the beverage up is explained. FIG. **7** shows a sectional view showing the opening condition to the closing condition of the openable lid **20**.

First, when the beverage container B is held by one hand and the top board **21** of the openable lid **20** is pushed down by the thumb and the like, the top board **21** is rotated in the direction of the storing portion **16** by using the hinge portion **70** as a fulcrum, and the presser piece **25** of the back of the top board **21** pushes the mouthpiece tube **30** within the storing portion **16** by means of the upper end edge. In this case, as a pair of guide ribs **27**, **27** is provided in the inner wall of the storing portion **16** opposed to the presser piece **25**, the end portion of the mouthpiece tube **30** is held between the pair of guide ribs **27**, **27**, and guided to the direction of the baseplate **11** with the action of the presser piece **25**.

On the other hand, the peripheral portion **22** of the top board **21** is guided by a plurality of standing edges **15***a* provided in the inner wall of the peripheral wall portion **15** of the storing portion **16** and begins to make contact with the upper edge of the peripheral wall portion **15**. Further, when the top board **21** is pushed down, end edges of each receiving piece **24***a*, **24***a* of the connecting portions **24**, **24** press hook-like inclined surfaces **45***a*, **45***a* of the stopper pieces **45**, **45** of each lock release button **40**, **40** in the inside direction of the sockets **50**, **50** with pressure against energization force of the springs **60**, **60**.

Then, when the end edges of each receiving piece **24***a*, **24***a* pass the inclined surfaces **45***a*, **45***a*, each lock release button **40**, **40** moves to the direction apart from the sockets **50**, **50** by energization force of the springs **60**, **60**, so that the lower edge portions **45***b*, **45***b* of each stopper piece **45**, **45** are fitted in and connected with depressions **24***c*, **24***c* of each connecting portion **24**, **24**. (left view of FIG. **4**) Thereby, the openable lid **20** closes the main body portion **10**.

As the mouthpiece tube **30**, for example, is a tubular member made of elastic and flexible synthetic resin material such as polyurethane, silicon resin and the like, when it is pushed in the storing portion **16** by the presser piece **25**, in the mouthpiece tube **30** is formed a first bending portion **33***a* bent just above the first coupling tube **13***b* at an acute angle in the directly below direction.

Further, the mouthpiece tube **30** is sandwiched between the upper edge of the presser piece **25** and the groove portion **14***a* formed in the baseplate **11** under the condition held between a pair of guide ribs **27**, **27** of the storing portion **16** at the end portion, so that a second bending portion **33***b* is formed in the portion of this sandwiched mouthpiece tube **30** (FIG. **7**).

Therefore, when the openable lid **20** is closed, the mouthpiece tube **30** is folded by the first bending portion **33***a* and the second bending portion **33***b* by means of the presser piece **25** and stored within the storing portion **16**.

At the first bending portion **33***a* and the second bending portion **33***b*, the tube wall of the mouthpiece tube **30** positioned at the inside in the bending direction is bent in the tube wall direction positioned at the outside, and made into contact with the tube wall positioned at the outside in the bending direction, so that the mouthpiece tube **30** is under the closed condition at each bending portion **33***a*, **33***b*. Further, at the second bending portion **33***b*, the mouthpiece tube **30** is inserted within the groove portion **14***a* by the presser piece **25** so as to block the air hole **14** with the tube wall of the mouthpiece tube **30**.

Thus, a beverage does not leak from the mouthpiece tube **30** and the air hole **14**, and the beverage never leaks within the storing portion **16** even if the beverage container B is tilted (FIG. **7**).

Further, since the mouthpiece tube **30** is stored within the storing portion **16** in the pushed and folded condition against its elasticity by the presser piece **25**, upward force acts on the presser piece **25**, thereby coupling receiving pieces **24***a*, **24***a* of each connecting portion **24**, **24** with lower edge portions **45***a*, **45***a* of each stopper piece **45**, **45** strongly.

Next, the other embodiment is explained. FIG. **9** is a schematic view showing the other embodiment of an annular packing **81** inserted into the lid body of the beverage container according to the invention. FIG. **9**(*a*) shows a phase diagram of mounting the annular packing, and FIG. **9**(*b*) shows a perspective view of the annular packing.

According to this embodiment, the annular packing **81** is coupled with a valve body **80** for blocking the air hole **14** opened to the side of the thread portion **18** via a thin movable portion **84**. The movable portion **84** energizes the valve body **80** to the direction for blocking the air hole **14**. In the inner periphery of the annular packing **81** is projected a lock piece **82** having an insertion portion **83** inserted in the second coupling tube **13***c* in the radial direction.

And, there is such a construction that when the annular packing **81** is inserted into the corner periphery of the baseplate **11** on the side of the thread portion **18** by inserting the second coupling tube **13***c* projected within the thread portion **18** into the insertion portion **83** of the lock piece **82**, the valve body **80** blocks the air hole **14**.

Therefore, in case of screwing the lid body in the mouth portion B1 of the beverage container B, the annular packing **81** is prevented from rotation by the second coupling tube **13***c* inserted in the insertion portion **83**, so that the valve body **80** is not disconnected from the air hole.**14**.

Further, when a beverage is sucked from the end portion of the mouthpiece tube **30**, it is difficult to continue drinking by lowering the internal pressure of the beverage container

B, but the valve body **80** starts to act by the external pressure and the air hole opens, and the internal pressure and the external pressure of the beverage container B become equal to give smooth sucking and drinking.

Moreover, the annular packing **81**, the valve body **80**, the movable portion **84** and the lock piece **82** are integrally molded with plastic material having appropriate elasticity such as polypropylene, ABS resin and the like.

As mentioned above, according to the invention, a mouthpiece tube **30** can completely be blocked, because the mouthpiece tube **30** stood from a storing portion **16** is folded in the horizontal condition across the mouthpiece tube **30** in the transverse direction at the flat upper edge of a presser piece **25** with closing action of an openable lid **20** and stored in the storing portion. Therefore, during the lid closing, even if a beverage container B falls or is vigorously shaken, there is no possibility of leaking a beverage from the mouthpiece tube **30**.

Further, as the mouthpiece tube **30** is raised by its elasticity with opening action of the openable lid **20**, there is no need to push open the openable lid **20** by hands, and there is no need to pull out and raise the mouthpiece tube **30** from the storing portion by hands.

Therefore, even in the midst of the condition where both hands cannot be used, for example, sports, cycling, drive and the like, and even a patient, who has a trouble in one hand or cannot freely use both hands, can open the openable lid **20** by one-touch handling with one hand and sucks and drinks a beverage from the mouthpiece tube **30**, and further closes the openable lid **20** by one-touch handling and stores the mouthpiece tube **30** without leaking the beverage outside.

According to the invention, in order to open the openable lid **20**, it is necessary to operate each switching device M1, M2 simultaneously. Therefore, in the condition of the closed openable lid, if a beverage container B falls, or rolls, or is vigorously shaken vertically, each of the switching devices M1, M2 is not functioned at the same time, and there is no possibility of jumping the mouthpiece tube **30** out of the storing portion **16** by opening the openable lid **20** and leaking a beverage outside.

Further, as the switching devices M1, M2 are provided in the peripheral wall portion **15** opposed to the radial direction of the storing portion **16**, each of the switching device M1, M2 can simultaneously be handled with the thumb and the first finger in the condition of gripping the thread portion **18** of the lid body by one hand, and as the top board **21** can be pushed down with the inner surface of the thumb, opening and closing operation of the openable lid can simply be carried out.

Further, when the openable lid **20** is closed, the air hole **14** is blocked with the tube wall of the mouthpiece tube **30** folded by the presser piece **25**, and there is no possibility of leaking a beverage from the air hole **14** at the time of non-use. Further, the air hole **14** can securely be closed by interlocking with an action of closing the lid.

According to the invention, as the tube wall of the mouthpiece tube **30** horizontally folded at the upper edge of the presser piece **25** is fitted in the groove portion **14**a of the baseplate **11**, closing of the mouthpiece tube **30** and that of the air hole **14** by the tube wall of the mouthpiece tube **30** can securely be carried out.

According to the invention, as the end portion of the mouthpiece tube **30** is held between a pair of guide ribs **27**, **27** with the action of the presser piece **25** and guided to the direction of the base plate with the action of the presser piece **25**, the mouthpiece tube can securely be pushed and folded.

According to the invention, as an identification portion **42***a* for identifying the position with the inner surface of a finger is provided on the outer surface of the pressure wall **42** for pressing lock release buttons **40**, **40** with pressure, even any visually handicapped person and blind person, or at a situation where nobody can look away such as drive, cycling and the like, it is possible to confirm the existing position of the lock release buttons **40**, **40** with the tip of a finger.

According to the invention, as there is provided a valve body **80** for opening and closing the air hole **14**, even when weak persons such as children, old people and others cannot completely close the openable lid, and as a result, the air hole **14** cannot sufficiently be blocked with the tube wall of the mouthpiece tube **30**, the air hole **14** is blocked with the valve body **80**, there is no possibility of leaking a beverage from the air hole **14** at the time of non-use. Further, at the time of use, when the beverage container is pressed by hand with pressure, a beverage within the inside can be pressed out of the mouthpiece tube **30**, and a sucking and drinking amount can be controlled with hand.

According to the invention, as a valve body **80** is coupled via an annular packing **81** and a movable portion **84** inserted into the thread portion **18**, the valve body **80** can be arranged with insertion of the packing **81**, and hence the construction is simple.

According to the invention, as there is provided a lock piece **82** having an insertion portion **83** for inserting the second coupling tube **13***c* therein at the inner periphery of the annular packing **81**, when the lid body is screwed in the male screw portion B2 of the mouth portion B1 of the beverage container B, the annular packing **81** can be prevented from rotation. Therefore, the valve body **80** never disconnected from the air hole **14**.

According to the invention, as there is provided a hooking portion **29** for tying a suspending strap-like body **28** to the main body portion, the lid body can easily be carried out and missing thereof is lessened.

Further, at the time of using the lid body, when a person hangs from his neck a beverage container mounted the lid body thereon, even in the midst of cycling, drive and the like, it is possible to easily draw the beverage container near him.

According to the invention, as a cap **90** for storing the suction tube **32** is engageably provided in a lid body, when the cap is connected with the lid body, the lid body and the suction tube **32** are integrally controlled, and there is no possibility of losing the suction tube **32**. Further, it is sanitary because the suction tube **32** and the thread portion **18** of the lid body can be prevented from adhesion of dust and foreign matter.

According to the invention, as a container portion **91** for storing a suction tube **32** is provided in the cap **90**, even if the suction tube **32** is, for example, gyrationally stored in the container portion **91**, the suction tube can adhere to the inner wall of the container portion **91** with its elasticity, and in case of removing the cap **90** from the thread portion, the suction tube **32** never jumps out of the cap **90**.

According to the invention, as the cap **90** is fitted and connected with the outer peripheral surface of the thread portion **18** of the lid body, even a patient who cannot freely use his two hands can remove the cap **90** by one-touch action with one hand. Further, as a standing wall **92** is provided, the cap **90** cannot easily be separated from the thread portion **18**.

What is claimed is:

1. A lid body, configured to be detachably mountable on a beverage container, the lid body comprising:

a main body portion comprising a baseplate;

an openable lid hingedly attached to the main body portion;

a raisable mouthpiece tube in the main body portion, the raisable mouthpiece tube flexibly extending into the beverage container through the baseplate when the lid body is mounted on the beverage container;

a presser piece having a flat upper edge, the presser piece being positioned on an inner surface of the openable lid, such that the presser piece is stored within the main body and is configured to block the mouthpiece tube in concert with a lid-closing motion of the openable lid and to cause the mouthpiece tube to block an airhole extending through the baseplate;

a plurality of switching devices positioned in opposition to each other along a radial direction of the main body portion; and

a plurality of connecting portions, each of the plurality of connecting portions corresponding to and connecting with one of the plurality of switching devices, the plurality of connecting portions being positioned on the inner surface of the openable lid.

2. A lid body, configured to be detachably mountable on a beverage container, the lid body comprising:

a main body portion comprising a storing portion for storing a mouthpiece tube; a thread portion, configured to threadably connect the lid body to a mouth portion periphery of the beverage container, to which the lid body is mountable; and a common baseplate separating the storing portion and the thread portion, the common baseplate defining an air hole and a communicating hole for communicating the storing portion and the thread portion;

an openable lid hingedly mounted on the main body portion;

a coupling tube fitted in the communicating hole for detachably connecting the mouthpiece tube to a suction tube, the suction tube being extendable into the beverage container when the lid body is mounted on the beverage container;

a pair of switching devices positioned in opposition to each other along a radial direction of the storing portion;

a pair of connecting portions for connecting with the corresponding pair of switching devices, the pair of connecting portions being positioned on an underside of the openable lid; and

a presser piece having a flat upper edge, the presser piece being positioned on the underside of the openable lid such that the presser piece is stored within the main body portion so as to block the mouthpiece tube, causing the mouthpiece tube to fold when the openable lid is in a closed position, and thereby causing the air hole to be blocked by a tube wall of the folded mouthpiece tube.

3. The lid body according to claim **2**, the baseplate comprising a groove portion configured to fit the tube wall of the folded mouthpiece tube.

4. The lid body according to claim **2**, the storing portion comprising a pair of projecting ribs configured to guide the mouthpiece tube to an inner wall.

5. The lid body according to claim **2**, each of the pair of switching devices comprising a socket integrally formed with the storing portion and a lock release button flexibly movable within the socket, the lock release button comprising a stopper piece, connectable with the corresponding connecting portion, and an identification portion for identifying a position of the lock release button by contact with a finger of a user.

6. The lid body according to claim **2**, the air hole open to the thread portion comprising a valve body for opening and closing the air hole.

7. The lid body according to claim **6**, the valve body being coupled to an annular packing of the thread portion via a movable portion.

8. The lid body according to claim **7**, the annular packing comprising a peripheral clamp piece on an inner periphery of the annular packing, the peripheral clamp piece having an insert portion of the coupling tube.

9. The lid body according to claim **1**, the main body portion further comprising a hook portion configured for tying a strap-like body to the lid body to enable suspension of the beverage container.

10. The lid body according to claim **2**, the main body portion further comprising a hook portion configured for tying a strap-like body to the lid body to enable suspension of the beverage container when the lid body is mounted on the beverage container.

11. The lid body according to claim **1**, further comprising:

a cap connectable with the main body portion; and

a suction tube connectable with the mouthpiece tube and extendable into the beverage container when the lid body is mounted on the beverage container, wherein the suction tube is stored in the cap.

12. The lid body according to claim **2**, further comprising:

a cap connectable with the main body portion, wherein the suction tube is stored in the cap.

13. The lid body according to claim **11**, the cap comprising a container portion for storing the suction tube, a step portion connected with the container portion and a circumferential wall projecting upwardly from the step portion.

14. The lid body according to claim **12**, the cap comprising a container portion for storing the suction tube, a step portion connected with the container portion and a circumferential wall projecting upwardly from the step portion.

15. The lid body according to claim **13**, the circumferential wall comprising an inner peripheral surface configured to fit around an outer peripheral surface of a thread portion of the lid body, the thread portion being configured to threadably connect the lid portion to the beverage container.

16. The lid body according to claim **14**, the circumferential wall comprising an inner peripheral surface configured to fit around an outer peripheral surface of the thread portion of the lid body.

* * * * *