US009216277B2

(12) **United States Patent**
Myers

(10) **Patent No.: US 9,216,277 B2**
(45) **Date of Patent: Dec. 22, 2015**

(54) **HEMOSTASIS MECHANISM AND METHOD**

(71) Applicant: **Randy Joe Myers**, Bloomington, IN (US)

(72) Inventor: **Randy Joe Myers**, Bloomington, IN (US)

(73) Assignee: **Cook Medical Technologies, LLC**, Bloomington, IN (US)

(*) Notice: Subject to any disclaimer, the term of this patent is extended or adjusted under 35 U.S.C. 154(b) by 215 days.

(21) Appl. No.: **13/769,510**

(22) Filed: **Feb. 18, 2013**

(65) **Prior Publication Data**

US 2013/0253565 A1 Sep. 26, 2013

Related U.S. Application Data

(60) Provisional application No. 61/613,120, filed on Mar. 20, 2012.

(51) **Int. Cl.**

A61M 5/178	(2006.01)
A61M 39/06	(2006.01)
A61M 25/10	(2013.01)
A61M 29/02	(2006.01)

(52) **U.S. Cl.**

CPC ***A61M 39/0613*** (2013.01); ***A61M 25/10182*** (2013.11); ***A61M 29/02*** (2013.01); *A61M 2039/062* (2013.01); *A61M 2039/0626* (2013.01); *A61M 2039/0673* (2013.01)

(58) **Field of Classification Search**

CPC A61M 1/0068; A61M 25/10182; A61M 5/178; A61M 5/315; A61M 5/48; A61M 5/484; A61M 5/488; A61M 5/50; A61M 5/5013; A61M 5/502; A61M 2005/5033; A61M 25/1018; A61M 25/10181; A61M 39/06; A61M 39/0606; A61M 39/0613; A61M 2039/062; A61M 2039/0626; A61M 2039/0673

See application file for complete search history.

(56) **References Cited**

U.S. PATENT DOCUMENTS

4,960,259	A	10/1990	Sunnanväder et al.	
5,127,906	A *	7/1992	Landry et al.	604/110
5,514,109	A	5/1996	Mollenauer et al.	
5,871,474	A	2/1999	Hermann et al.	
5,895,376	A	4/1999	Schwartz et al.	
6,221,057	B1	4/2001	Schwartz et al.	
6,276,661	B1	8/2001	Laird	
7,597,688	B1	10/2009	Masson	
2001/0021828	A1 *	9/2001	Fischer et al.	604/218
2004/0172008	A1	9/2004	Layer	
2011/0282301	A1	11/2011	Nielson	

FOREIGN PATENT DOCUMENTS

EP	0307743	9/1988
EP	1046843 A2	4/2000
EP	1046843 A3	6/2002
WO	9911308	3/1999

* cited by examiner

Primary Examiner — Jonathan W Miles
(74) *Attorney, Agent, or Firm* — Liell & McNeil

(57) **ABSTRACT**

A hemostasis mechanism includes a housing, and a pressure responsive seal positioned within the housing and having an outer seal surface exposed to a fluid pressure of a port formed in the housing. A pressurization device is in fluid communication with the port, and includes a detent having a release state, and an engaged state holding a plunger of the pressurization device at an advanced position to maintain an increased fluid pressure supplied to the pressure responsive seal to maintain sealing engagement about a transluminal device. Related methodology is also disclosed.

17 Claims, 3 Drawing Sheets

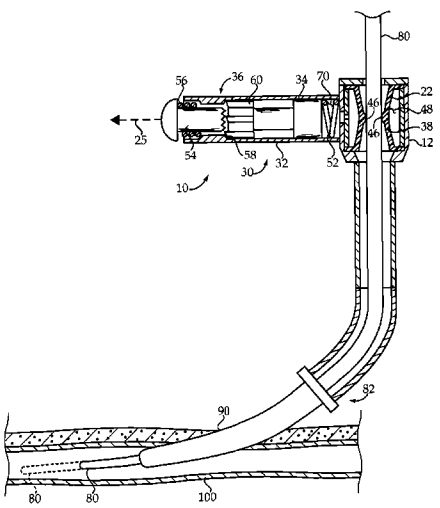

IMPERATIVE Ex. 1012
IPR Petition - US 11,697,012

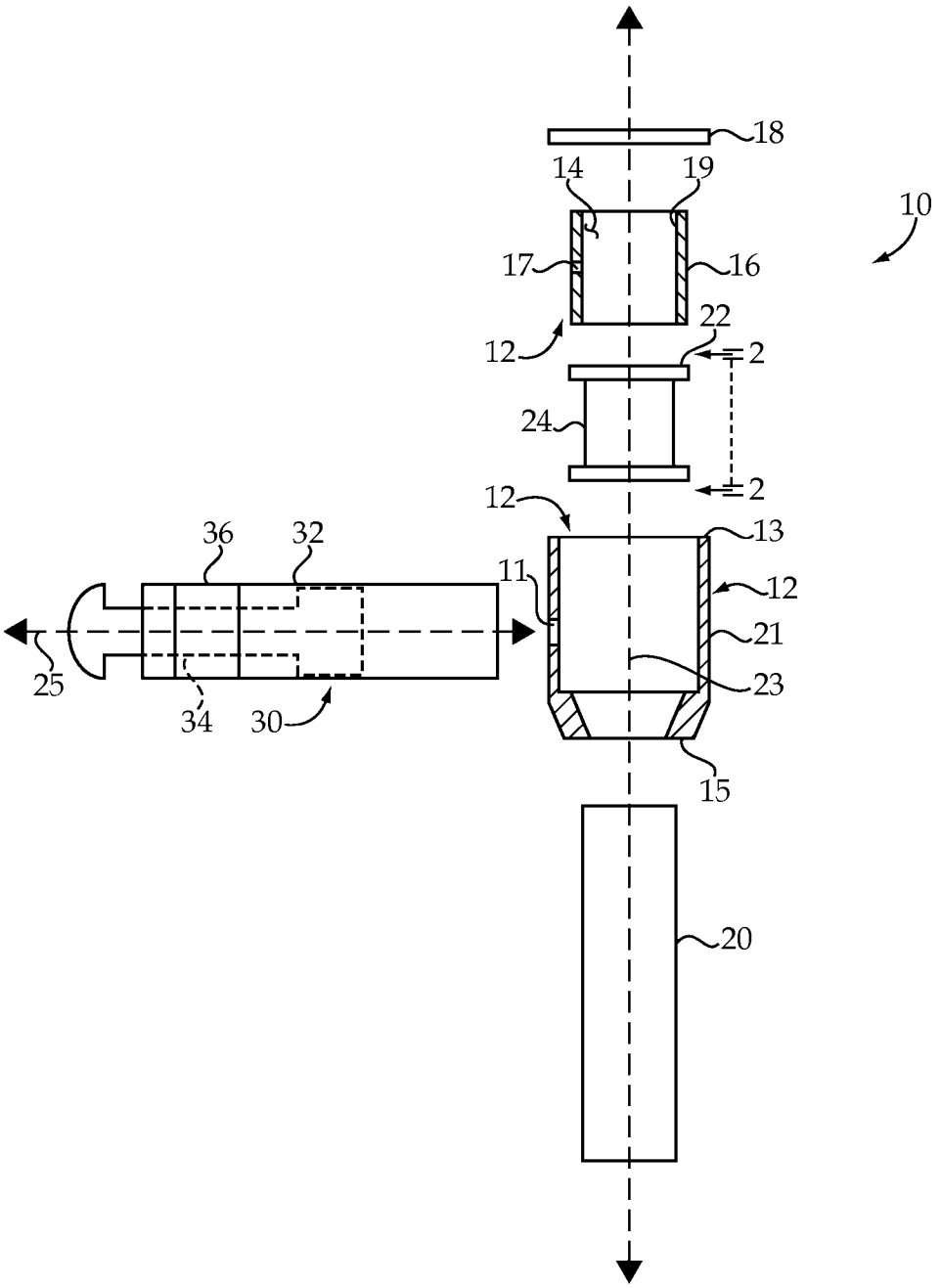

Fig.1

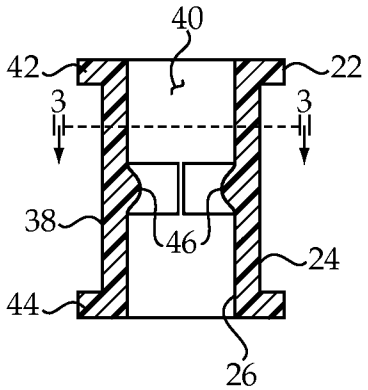

Fig.2

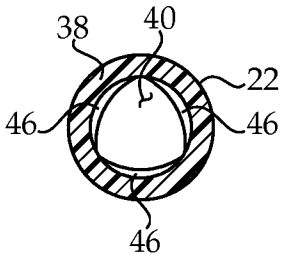

Fig.3

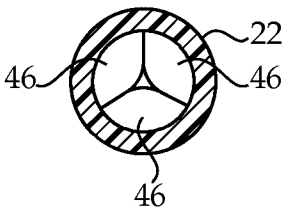

Fig.4

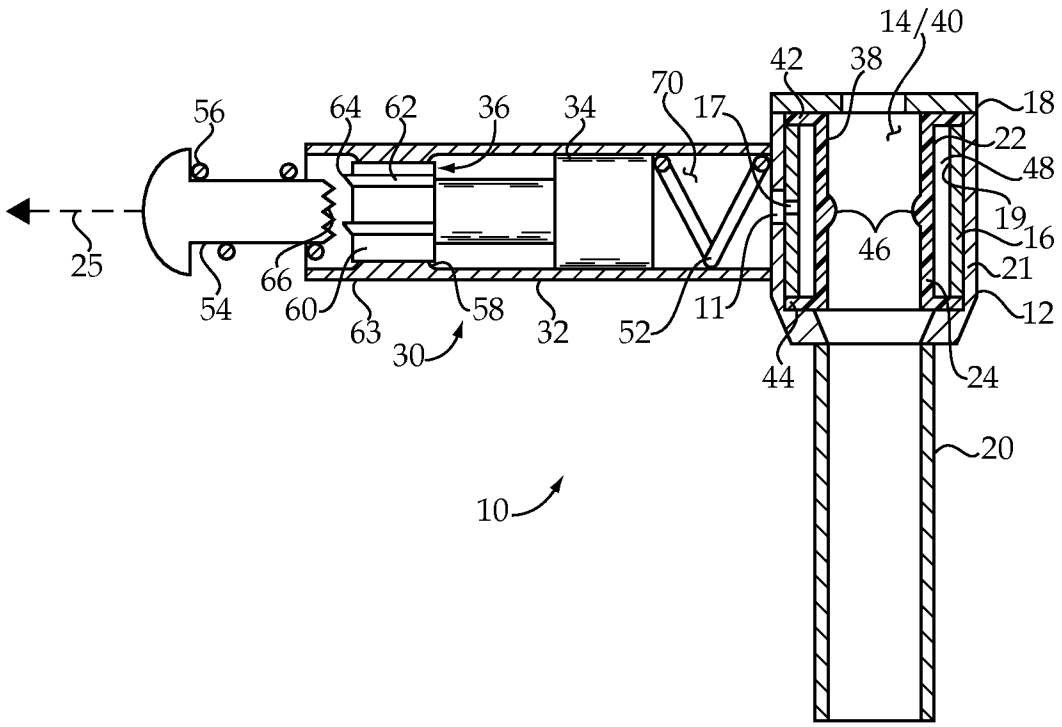

Fig.5

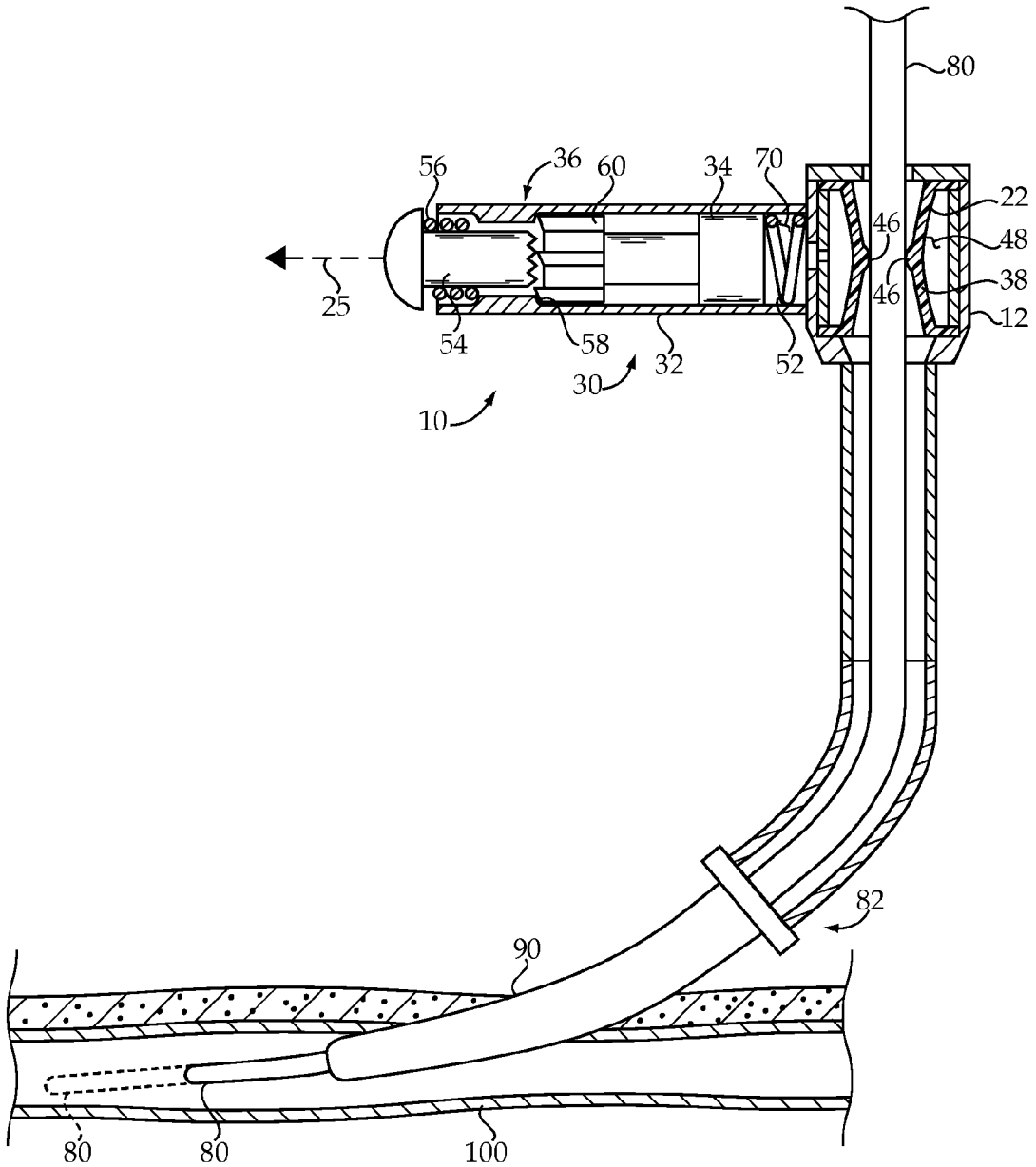

Fig.6

HEMOSTASIS MECHANISM AND METHOD

RELATION TO OTHER PATENT APPLICATION

This application claims priority to provisional patent application 61/613,120, filed Mar. 20, 2012 with the same title.

TECHNICAL FIELD

The present disclosure relates generally to fluidly sealing about a transluminal device with a pressure responsive seal in a hemostasis mechanism, and relates more particularly to controlling the fluid sealing via engaging and releasing a detent in a pressurization device.

BACKGROUND

A variety of different sealing mechanisms are used to prevent the backflow of blood or other fluids from a patient during certain types of treatment or diagnostic procedures. In a typical transluminal treatment or diagnostic scenario, a clinician controls such a mechanism to alternately block or open a fluid conduit extending from outside the patient into an intraluminal space such as a vein or artery. Transluminal devices such as wire guides and catheters may be passed through the conduit when open, and backflow of blood or another fluid can be prevented when the conduit is closed. Since it is often necessary for transluminal devices to reside within the fluid conduit when a seal is established, many sealing mechanisms are engineered to fluidly seal around a wire guide, catheter or the like.

One particular strategy employs a push/pull sleeve or tube, coupled with a housing, which can be advanced through the center of a resilient gasket or the like positioned in the housing to open the gasket and provide a passage for introducing a transluminal device into the patient. When the push/pull sleeve is retracted, a fluid seal is formed about the device by way of a tendency for the gasket to return to a closed state. Other techniques employ a rotating mechanism which adjusts a different type of gasket from an open configuration to a closed configuration, sealing about a transluminal device. Each of these strategies has various drawbacks. In the case of rotating mechanism devices, their use can be unwieldy and slow. In certain instances, a clinician may need to seal and unseal about a device multiple times during a procedure, and the need to rotate a sealing mechanism to seal, unseal, seal again, etc. can be tiresome. In the case of push/pull devices, some of these shortcomings do not exist, as forming or unforming a seal is fairly quick and easy. A tradeoff may exist, however, in the robustness of the seal, for at least certain of such designs. In other words, while push/pull designs may be efficient to use, the seal may not be as effective against preventing backflow of fluid from a patient.

Another known strategy is set forth in United States Patent Application Publication Number 2004/0172008 to Layer. Layer proposes a hemostasis valve having a collapsible member positionable within a valve body, and a pressure application system configured to increase a pressure within an elongate chamber in the valve body to seal the collapsible member about a medical instrument. While Layer may be suitable for its intended purposes, the strategy has various shortcomings.

SUMMARY

In one aspect, a hemostasis mechanism for use in treating a patient includes a housing defining a through-bore having a longitudinal axis, and a port in fluid communication with the through-bore. The mechanism further includes a pressure responsive seal extending circumferentially about the longitudinal axis within the through-bore, and having an outer seal surface exposed to a fluid pressure of the port, and an inner seal surface. A pressurization device is in fluid communication with the port, and includes a plunger movable from a first position toward an advanced position, to increase the fluid pressure such that the pressure responsive seal deforms into sealing engagement with a transluminal device positioned within the through-bore. The pressurization device further includes a detent operably coupled with the plunger and having a release state, and an engaged state holding the plunger in the advanced position to maintain the increased fluid pressure.

In another aspect, a method of percutaneously treating a patient includes pushing a plunger toward an advanced position in a pressurization device in fluid communication with a pressure responsive seal of a hemostasis mechanism in sealing engagement with a transluminal device, and adjusting a detent in the pressurization device from an engaged state inhibiting retracting of the plunger, to a release state, in response to the pushing of the plunger. The method further includes retracting the plunger subsequent to adjusting the detent such that a fluid pressure supplied by the pressurization device to the pressure responsive seal is reduced, and sliding the transluminal device through the hemostasis mechanism to change its position within a body lumen of the patient while the fluid pressure is at the reduced pressure.

BRIEF DESCRIPTION OF THE DRAWINGS

FIG. **1** is a disassembled view of a hemostasis mechanism, with certain components sectioned, according to one embodiment;

FIG. **2** is a sectioned view taken along line **2-2** of FIG. **1**;

FIG. **3** is a sectioned view taken along line **3-3** of FIG. **2**;

FIG. **4** is another sectioned view similar to FIG. **3**;

FIG. **5** is a sectioned side diagrammatic view of the hemostasis mechanism of FIG. **1**, in an assembled state; and

FIG. **6** is a partially sectioned side diagrammatic view of the hemostasis mechanism of FIG. **1** at one stage of a treatment procedure, according to one embodiment.

DETAILED DESCRIPTION

Referring to FIG. **1**, there is shown a hemostasis mechanism **10** for use in treating a patient, according to one embodiment. Mechanism **10** includes a housing **12** defining a through-bore **14** having a longitudinal axis **23**, and a port **11** in fluid communication with through-bore **14**. Housing **12** may include a multi-piece housing in certain embodiments, and having an outer housing piece **21** and a core piece **16**. Housing **12** may also include a cap **18** attached to outer piece **21** and configured to clamp core piece **16** and a pressure responsive seal **22** within outer piece **21**. In an assembled state, pressure responsive seal **22** extends circumferentially about longitudinal axis **23** within through-bore **14**, and includes an outer seal surface **24** exposed to a fluid pressure of port **11**, and an inner seal surface **26**. Housing **12** may also include a tube piece **20** configured to attach to outer housing piece **21** such that through-bore **14** may be placed in fluid communication with a body lumen in a patient, as further described herein. As will be further apparent from the following description, the present disclosure sets forth unique design and methodology for controlling sealing engagement of pressure responsive seal **22** about a transluminal device

positioned within through-bore **14** and extending through mechanism **10** into a body lumen of a patient such as a vein or artery.

Mechanism **10** also includes a pressurization device **30** in fluid communication with port **11**, and including a plunger **34** movable from a first position approximately as shown in FIG. **1**, toward an advanced position, to increase a fluid pressure of port **11** such that seal **22** deforms into sealing engagement with a transluminal device. Device **30** further includes a detent **36** operably coupled with plunger **34** and having a release state, and an engaged state holding plunger **34** at an advanced position to maintain the increased fluid pressure. In the illustrated embodiment, when mechanism **10** is assembled core piece **16** will be positioned within outer housing piece **21**, and port **17** will be placed in fluid communication with port **11** such that ports **11** and **17** together communicate a fluid pressure of pressurization device **30** to seal **22**. In alternative embodiments, housing pieces **21** and **16** could be formed as a single piece having a single port. Core piece **16** includes an inner housing surface **19** defining through-bore **14**. Where no core piece is used, the single housing piece taking the place of outer housing piece **21** and core piece **16** could be understood to include the inner housing surface defining the through-bore.

Referring now to FIG. **2**, there is shown a sectioned view through seal **22** taken along line **2-2** of FIG. **1**. Seal **22** may be formed of a suitable deformable material such as a rubber-like material or silicone, and may have a cylindrical wall **38** which includes inner seal surface **26** and outer seal surface **24**, cylindrical wall **38** having a longitudinal passage **40** formed therein for receipt of a transluminal device and being co-axial with through-bore **14** when mechanism **10** is assembled for receipt of a transluminal device. Seal **22** may further include a first end flange **42** and a second end flange **44**, each projecting radially outward from cylindrical wall **38**. When mechanism **10** is assembled, core piece **16** may be positioned about cylindrical wall **38** between first and second end flanges **42** and **44**. Outer piece **21** may contain seal **22** and core piece **16** therein, and cap **18** may be attached to outer piece **21** and clamps core piece **16** and seal **22** within outer piece **21**. Cap **18** might be attached to outer piece **21** via an adhesive, threads, or an interference fit or the like, such that first end flange **42** is compressed and held in sealing engagement between cap **18** and core piece **16**, and second end flange **44** is compressed and held in sealing engagement between outer piece **21** and core piece **16**, the significance of which will be further apparent from the following description and illustrated by way of subsequently described drawings.

Referring also now to FIG. **3**, there is shown a sectioned view taken along line **3-3** of FIG. **2**, and illustrating a plurality of sealing protrusions **46** each projecting radially inward from cylindrical wall **38** and being movable inwardly via the pressure responsive deformation of seal **22** to establish the sealing engagement of seal **22** with the transluminal device. In the embodiment shown, sealing protrusions **46** are crescent shaped, and a total of three such sealing protrusions **46** are provided. Upon deforming seal **22**, and in particular deforming cylindrical wall **38** inwardly in response to a fluid pressure supplied from pressurization device **30**, protrusions **46** form a tricuspid sealing pattern about the transluminal device extending through passage **40** and through-bore **14**. FIG. **4** illustrates an example tricuspid sealing pattern.

Referring now also to FIG. **5**, there is shown mechanism **10** assembled, where cap **18** is attached to outer piece **21** and clamps core piece **16** and seal **22** therein. Tube **20** is attached to outer housing piece **21**, and pressurization device **30** is also attached to outer piece **21** such that a cavity **70** formed in a housing **32** of pressurization device **30** is in fluid communication with port **11**, port **17**, and a clearance **48** which extends between inner housing surface **19** and outer seal surface **24** and surrounds seal **22**. Fluid communication between clearance **48** and cavity **70** via ports **11** and **17** allows a pressure of a fluid, such as air, or saline, to act upon seal **22** to deform the same, thereby controlling the sealing engagement between seal **22** and a transluminal device extending through mechanism **10**. In one embodiment, pressurization device **30** further includes a biasing spring **52** positioned within cavity **70** and biasing plunger **34** toward the first position, approximately as shown in FIG. **5**. Pressurization device **30** may further include a plunger actuator **54** coupled with plunger **34**, and which could be formed as one piece therewith, configured to control advancing and retracting of plunger **34** to vary fluid pressure in cavity **70** and thereby control the sealing engagement of seal **22**. Actuator **54** may include a button or the like configured to be pushed by a clinician to advance and retract plunger **34**, and also to adjust detent **36** between its engaged state and its release state as further described herein.

It will be recalled that in the release state of detent **36**, plunger **34** may be retracted, such as under the influence of spring **52**, and also under the influence of a fluid pressure in cavity **70**. In the engaged state of detent **36**, plunger **34** will be held at its advanced position to maintain an increased pressure in cavity **70**, and thereby maintain sealing engagement of seal **22** about the transluminal device. In certain embodiments, pushing actuator **54** may push plunger **34** to advance the same, and simultaneously adjust detent **36** to its release state or its engaged state, as the case may be. A biasing spring **56** may be positioned between actuator **54** and housing **32** to bias actuator **54** away from and out of contact with plunger **34**. Any suitable retention mechanism might be employed to prevent actuator **54** from popping out of housing **32** if desired.

A variety of different detent designs are contemplated herein, and in a practical implementation strategy detent **36** may function in a manner analogous to that of detents used in connection with certain ball point pens. To this end, plunger **34** may define a transverse axis **25**, and detent **36** may further include a non-rotatable stop **58**, formed integrally with housing **32** for example, and a rotatable catch **60** coupled with plunger **34**. Catch **60** may be movable between a first angular orientation about transverse axis **25** at which catch **60** contacts stop **58** and retracting of plunger **34** from its advanced position is prevented, and a second orientation at which refracting of plunger **34** is permitted.

In FIG. **5**, detent **36** is shown in its release state such that catch **60** is not engaged with stop **58** and plunger **34** has moved to a first, retracted position via spring **52**. In particular, a plurality of ribs **62** of catch **60** have been permitted to slide past a plurality of counterpart ribs **63** of stop **58**. Catch **60** is thus at an example second orientation about axis **25**. Ribs **62** may each include an angled end surface **64** which is engaged by counterpart angled end surfaces **66** on the end of actuator **54**. Sliding engagement between end surfaces **66** and **64** as actuator **54** is advanced, in opposition to a force of spring **56**, can impart a tendency for catch **60** to rotate about axis **25** to a position at which ribs **62** contact ribs **63**. Since catch **62** is coupled with plunger **34**, and may be attached to plunger **34**, when ribs **62** are rotated to a position at which they engage ribs **63**, plunger **34** is held in an advanced position. In particular, facing end surfaces of the respective ribs may contact one another to inhibit axial sliding of catch **60** and plunger **34** to the left in FIG. **5**.

INDUSTRIAL APPLICABILITY

Referring now also to FIG. **6**, there is shown mechanism **10** as it might appear with a transluminal device **80** extending

therethrough, and into a patient via an introducer **82** providing an entry point **90** into a body lumen **100** of the patient. In FIG. **6**, plunger **34** has been pushed toward an advanced positioned in pressurization device **30** by pushing actuator **54**. Actuator **54** has interacted with catch **60** to rotate catch **60** to its first angular orientation at which it contacts stop **54** such that retracting of plunger **34** from its advanced position is prevented. In response to pushing plunger **34**, detent **36** has thus been adjusted to its engaged state inhibiting retracting of plunger **34**. Fluid pressure in cavity **70** has thus increased to supply an increased fluid pressure to clearance **48**. Seal **22**, and in particular cylindrical wall **38**, has deformed in response to the increased pressure such that sealing protrusions **46** contact transluminal device **80**.

Sealing about transluminal device **80**, which may include a catheter, wire guide, or some other mechanism, in this general manner may be performed for various purposes such as the injection of fluid into the body lumen, to prevent backflow of the fluid during injecting, or simply to prevent blood from the body lumen from flowing back through the apparatus providing percutaneous access. In the case of fluid injections, a side arm fitting or the like might be coupled with mechanism **10** or introducer **82** to enable a second fluid access path into body lumen **100**. When it is desirable to change a position of device **80** within body lumen **100**, actuator **54** may be pushed again to adjust detent **36** from its engaged state inhibiting retracting of plunger **34**, to its release state. It will thus be appreciated that plunger **34** may be slightly advanced within housing **32** when actuator **54** is pushed to release detent **36**. When detent **36** is adjusted to its release state, plunger **34** may retract such that fluid pressure supplied by device **30** to seal **22** is reduced. The fluid pressure in cavity **70**, and an expanding force of spring **52**, may urge plunger **34** back toward its retracted position with detent **36** released. The reduced pressure in clearance **48** will reduce the sealing force of seal **22** about transluminal device **80**. This facilitates sliding of transluminal device **80** to a changed position within body lumen **100**, while the pressure in clearance **48** is at a reduced pressure such as the position shown via phantom lines in FIG. **6**. When it is again desirable to seal about transluminal device **80**, a clinician may reestablish sealing engagement of seal **22** about device **80** at a changed position, and adjust detent **36** back to its engaged state to maintain the reestablished sealing engagement, in response to another pushing of actuator **54** and thus plunger **34** toward an advanced position.

As noted about, known hemostasis mechanism suffer from a variety of drawbacks. In the case of certain pressure actuated hemostasis mechanisms, one drawback is commonly the need to manually maintain a pressure about a hemostasis seal. In the present disclosure, a clinician may let go of plunger **34**, in particular letting go of actuator **54**, subsequent to adjusting detent **36** to, or back to, its engaged state. Another shortcoming associated with certain known hemostasis mechanisms is the lack of any positive feedback to a clinician indicating that a seal has been established about a transluminal device. In other words, a clinician will often have no way to know whether the seal formed about a transluminal device is sufficient, but instead relies upon guesswork or experience to determine whether they have supplied sufficient pressure to hold the seal. In the present disclosure, the relatively simple push-button operation of pressurization device **30** allows both hands-free work while the seal is established, and also tactile feedback to the clinician that indicates positive sealing engagement. In other words, the clinician will typically be able to feel the click when detent **36** is adjusted to its engaged state, and also feel a click when detent **36** is adjusted to its release state. Still another feature contemplated to be superior to known designs relates to the capability of pulling open seal **22** via reduced pressure resulting from retracting plunger **34**. In other words, a relatively rapid decrease in pressure within clearance **48** can impart a tendency for seal **22** to pop open relatively rapidly, hastening certain aspects of the associated treatment procedure. While it is contemplated that the fluid displaced by plunger **34** to control seal **22** will typically be air, for instance a displacement of about 2 milliliters of air, the present disclosure is not thereby limited and as alluded to above saline or some other actuation fluid might instead be used. It should also be appreciated that while pressurization device **30** is shown attached to housing **12**, in other instances a separate pressurization device connected via a flexible conduit or the like might be used.

The present description is for illustrative purposes only, and should not be construed to narrow the breadth of the present disclosure in any way. Thus, those skilled in the art will appreciate that various modifications might be made to the presently disclosed embodiments without departing from the full and fair scope and spirit of the present disclosure. Other aspects, features and advantages will be apparent upon an examination of the attached drawings and appended claims.

What is claimed is:

1. A hemostasis mechanism for use in treating a patient comprising:

a housing defining a through-bore having a longitudinal axis, and a first port in fluid communication with the through-bore;

a pressure responsive seal extending circumferentially about the longitudinal axis within the through-bore, and having an outer seal surface exposed to a fluid pressure of the first port, and an inner seal surface;

a pressurization device in fluid communication with the first port, and including a plunger movable from a first position toward an advanced position, to increase the fluid pressure such that the pressure responsive seal deforms into sealing engagement with a transluminal device positioned within the through-bore;

the pressurization device further including a detent operably coupled with the plunger and having a release state, and an engaged state holding the plunger at the advanced position to maintain the increased fluid pressure; and

the housing further includes a core piece having the first port formed therein and positioned about the cylindrical wall between the first and second end flanges, and an outer piece containing the pressure responsive seal and the core piece and having a second port formed therein fluidly connecting the first port with the pressurization device.

2. The mechanism of claim **1** wherein the plunger defines a transverse axis, and the detent further includes a non-rotatable stop, and a rotatable catch coupled with the plunger and movable between a first angular orientation about the transverse axis at which the catch contacts the stop and retracting of the plunger from the advanced position is prevented, and a second orientation at which retracting of the plunger is permitted.

3. The mechanism of claim **1** wherein the housing includes an inner housing surface defining the through-bore, and a clearance in fluid communication with the port extends between the inner housing surface and the outer seal surface and surrounds the pressure responsive seal.

4. The mechanism of claim **3** wherein the pressure responsive seal includes a cylindrical wall including the inner and

outer seal surfaces, and having a longitudinal passage formed therein and being coaxial with the through-bore, for receipt of the transluminal device.

5. The mechanism of claim **4** wherein the pressure responsive seal further includes a first end flange and a second end flange, each projecting radially outward from the cylindrical wall.

6. The mechanism of claim **4** wherein the pressure responsive seal further includes a plurality of sealing protrusions each projecting radially inward from the cylindrical wall and being movable inwardly via the deformation to establish the sealing engagement with the transluminal device.

7. The mechanism of claim **6** wherein the plurality of sealing protrusions includes a total of three crescent shaped protrusions forming a tricuspid sealing pattern about the transluminal device.

8. The mechanism of claim **3** further comprising a biasing spring biasing the plunger toward the first position.

9. The mechanism of claim **8** wherein the plunger defines a transverse axis, and the detent further includes a non-rotatable stop, and a rotatable catch coupled with the plunger and movable between a first angular orientation about the transverse axis at which the catch contacts the stop and retracting of the plunger from the advanced position is prevented, and a second orientation at which retracting of the plunger is permitted.

10. The mechanism of claim **1** wherein the housing further includes a cap attached to the outer piece and clamping the core piece and the pressure responsive seal within the outer piece, such that the first end flange is held in sealing engagement between the cap and the core piece, and the second end flange is held in sealing engagement between the outer piece and the core piece, to fluidly isolate the clearance from the through-bore.

11. A method of percutaneously treating a patient with a hemostasis mechanism that includes a housing defining a through-bore having a longitudinal axis, and a first port in fluid communication with the through-bore; a pressure responsive seal extending circumferentially about the longitudinal axis within the through-bore, and having an outer seal surface exposed to a fluid pressure of the first port, and an inner seal surface; a pressurization device in fluid communication with the first port, and including a plunger movable from a first position toward an advanced position, to increase the fluid pressure such that the pressure responsive seal deforms into sealing engagement with a transluminal device positioned within the through-bore; and the pressurization device further including a detent operably coupled with the plunger and having a release state, and an engaged state holding the plunger at the advanced position to maintain the increased fluid pressure, the housing further includes a core piece having the first port formed therein and positioned about the cylindrical wall between the first and second end flanges, and an outer piece containing the pressure responsive seal and the core piece and having a second port formed therein fluidly connecting the first port with the pressurization device, the method comprising the steps of:

pushing the plunger toward the advanced position in the pressurization device in fluid communication with the pressure responsive seal of the hemostasis mechanism in sealing engagement with the transluminal device;

adjusting the detent in the pressurization device from the engaged state inhibiting retracting of the plunger, to the release state, in response to the pushing of the plunger;

retracting the plunger subsequent to adjusting the detent such that a fluid pressure supplied by the pressurization device to the pressure responsive seal is reduced; and

sliding the transluminal device through the hemostasis mechanism to change its position within a body lumen of the patient while the fluid pressure is at the reduced pressure.

12. The method of claim **11** wherein the step of retracting includes retracting the plunger under the influence of a biasing spring.

13. The method of claim **12** further comprising a step of pulling open the pressure responsive seal via the reduced pressure.

14. The method of claim **12** further comprising the steps of reestablishing sealing engagement of the pressure responsive seal about the transluminal device at its changed position, and adjusting the detent back to its engaged state to maintain the reestablished sealing engagement, in response to pushing the plunger again.

15. The method of claim **14** further comprising a step of letting go of an actuator for the plunger subsequent to the adjustment of the detent back to its engaged state.

16. The method of claim **14** wherein the step of reestablishing includes deforming the pressure responsive seal to a tricuspid sealing pattern.

17. The method of claim **14** wherein the step of reestablishing includes displacing about 2 milliliters of air during the another advancement of the plunger.

* * * * *