US 20180193043A1

(19) United States

(12) Patent Application Publication

Marchand et al.

(10) Pub. No.: US 2018/0193043 A1

(43) Pub. Date: Jul. 12, 2018

(54) **DEVICES AND METHODS FOR TREATING VASCULAR OCCLUSION**

(71) Applicant: **Inari Medical, Inc.**, Irvine, CA (US)

(72) Inventors: **Phil Marchand**, Lake Forest, CA (US); **Benjamin E. Merritt**, San Clemente, CA (US); **John C. Thress**, Capistrano Beach, CA (US); **Jacob F. Louw**, Carlsbad, CA (US); **Paul Lubock**, Monarch Beach, CA (US); **Brian J. Cox**, Laguna Nigel, CA (US)

(21) Appl. No.: **15/498,320**

(22) Filed: **Apr. 26, 2017**

Related U.S. Application Data

(60) Provisional application No. 62/444,705, filed on Jan. 10, 2017.

Publication Classification

(51) **Int. Cl.**
A61B 17/221 (2006.01)

(52) **U.S. Cl.**
CPC *A61B 17/221* (2013.01); *A61B 2017/2215* (2013.01); *A61B 2017/2212* (2013.01)

(57) **ABSTRACT**

Systems and methods for removal of thrombus from a blood vessel in a body of a patient are disclosed herein. The method can include: providing a thrombus extraction device including a proximal self-expanding member formed of a fenestrated structure, a substantially cylindrical portion formed of a net-like filament mesh structure having a proximal end coupled to a distal end of the fenestrated structure; advancing a catheter constraining the thrombus extraction device through a vascular thrombus, deploying the thrombus extraction device by stacking a portion of the net-like filament mesh structure outside of the catheter by distally advancing the self-expanding member until the self-expanding member is beyond a distal end of the catheter; retracting the self-expanding member to unstack the portion of the net-like filament mesh structure and to capture the portion of the thrombus; and withdrawing the thrombus extraction device from the body.

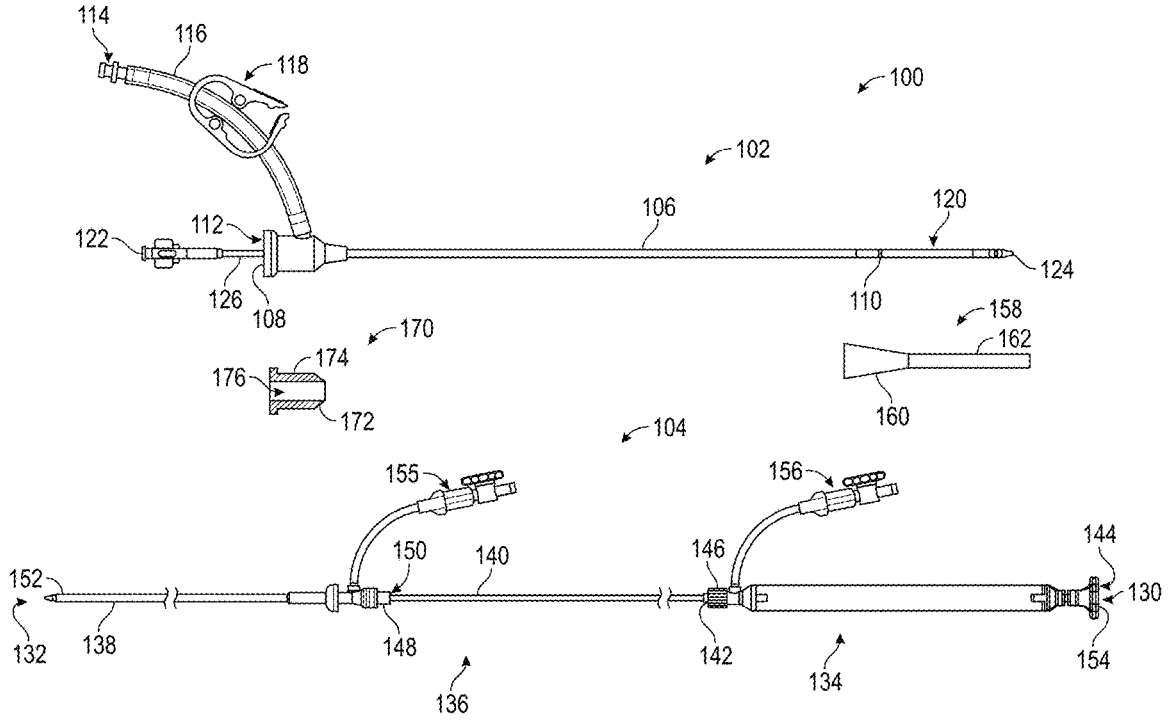

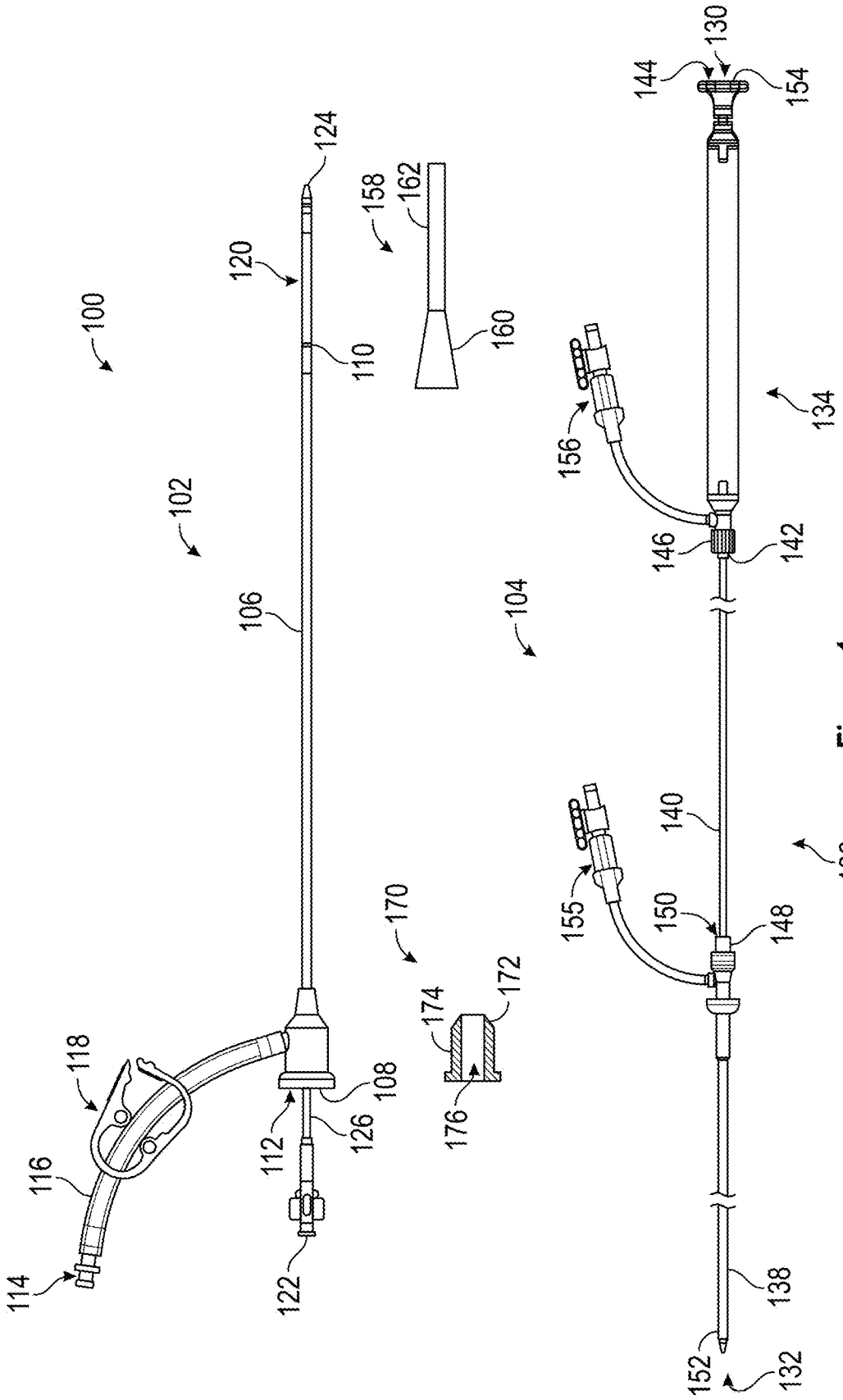
100
102
104
106
108
110
112
114
116
118
120
122
124
126
130
132
134
136
138
140
142
144
146
148
150
152
154
155
156
158
160
162
170
172
174
176

Figure 1

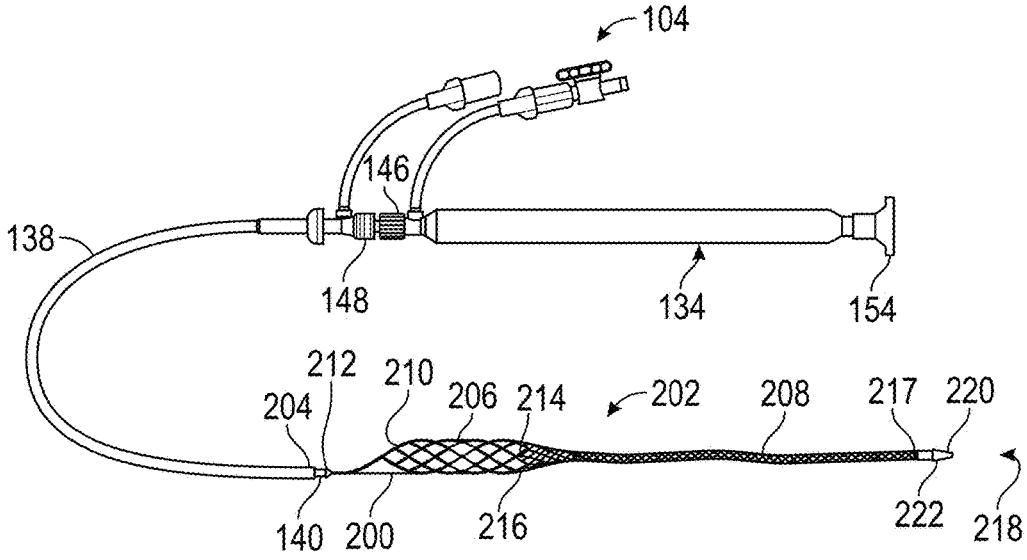

Figure 2

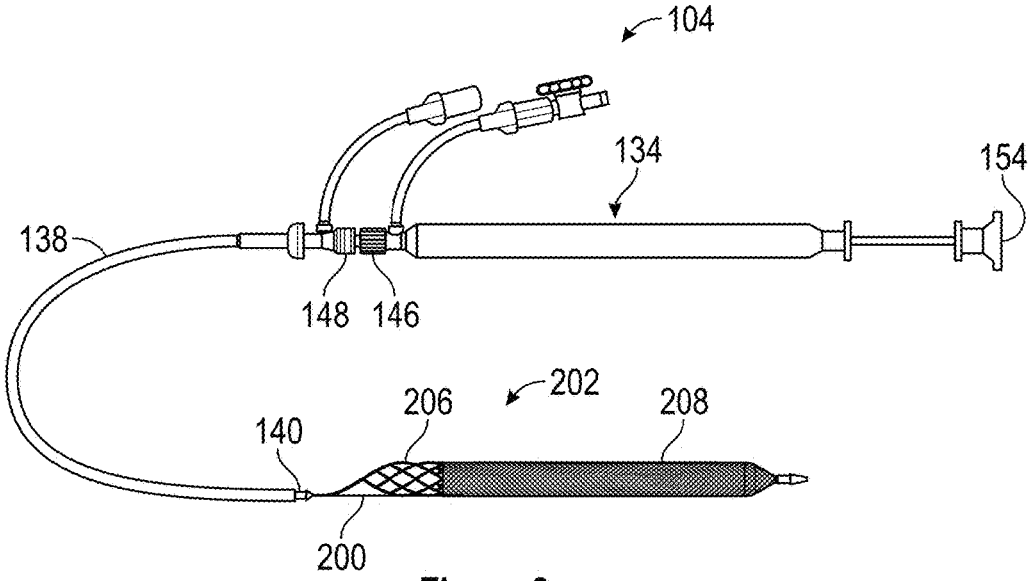

Figure 3

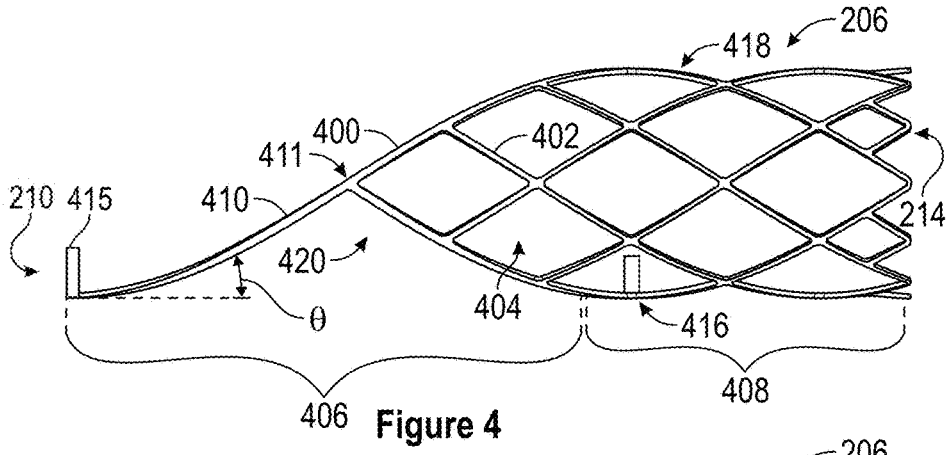

Figure 4

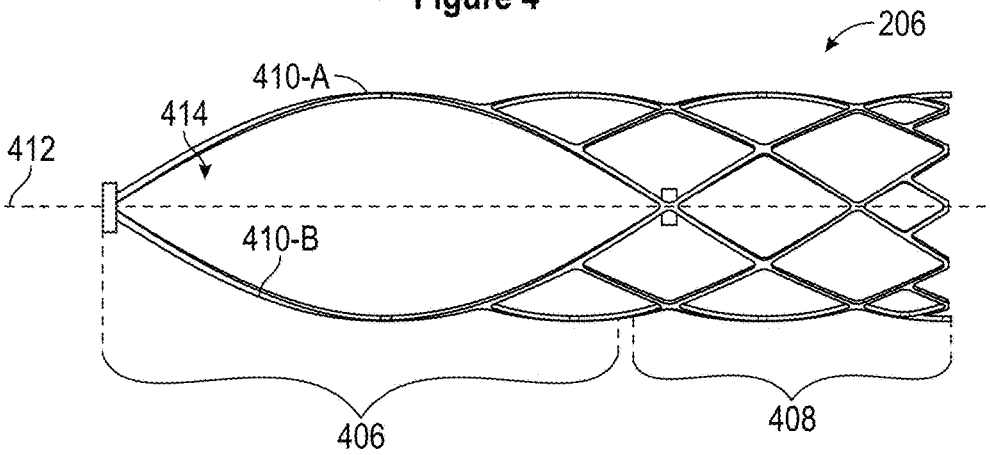

Figure 5

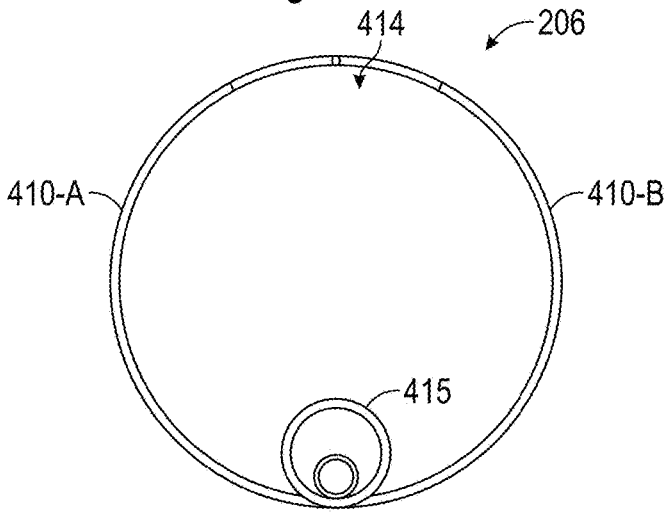

Figure 6

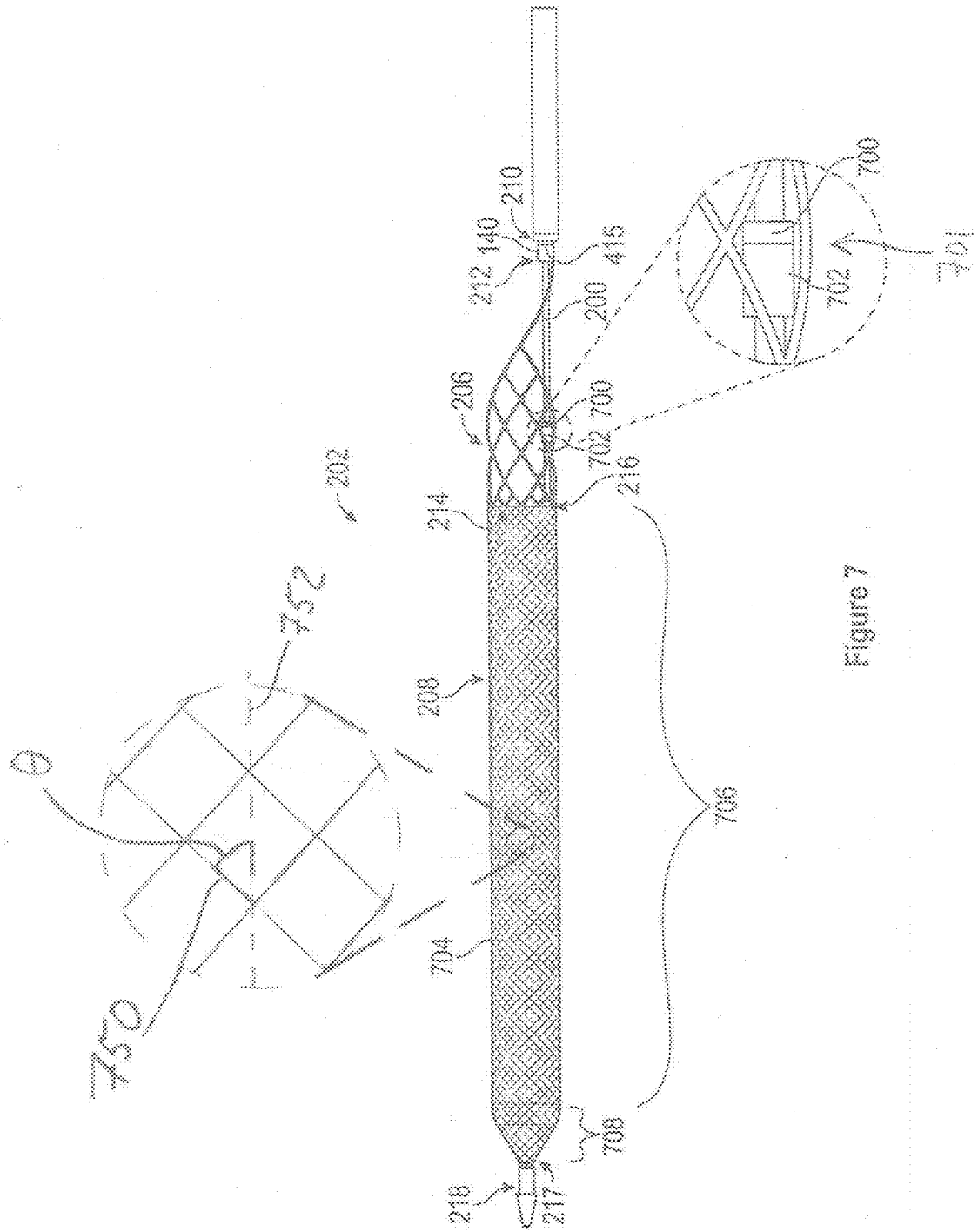

210
140
212
415
200
206
700
702
216
214
202
208
704
706
708
218
217
752
750
θ
701

Figure 7

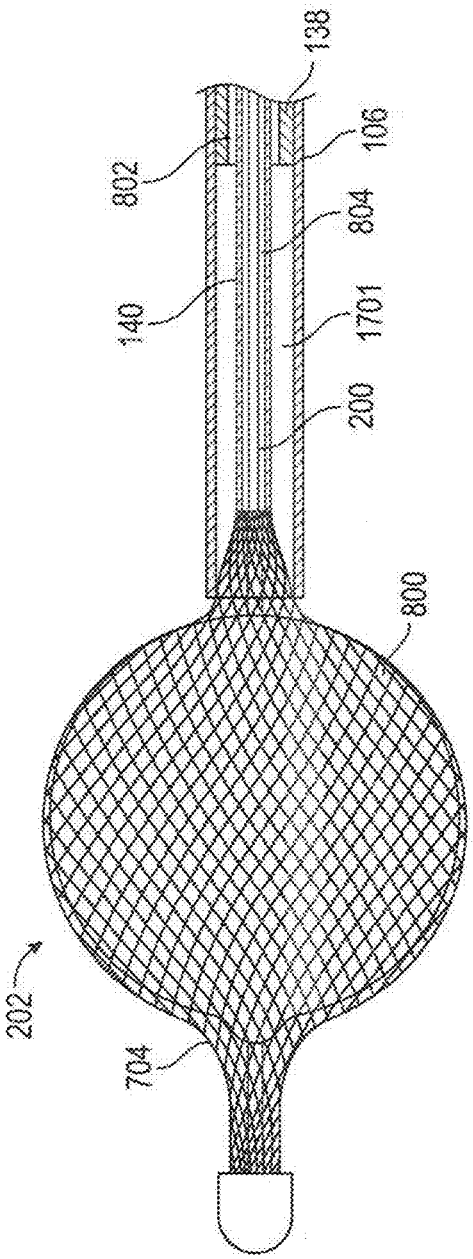

Figure 8

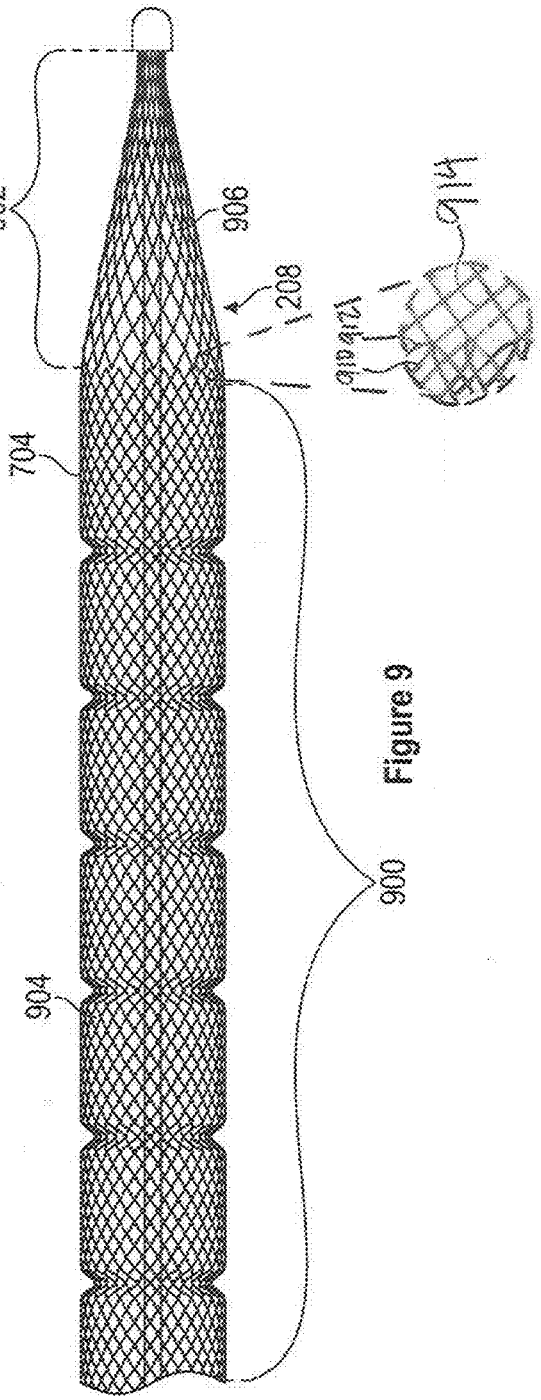

Figure 9

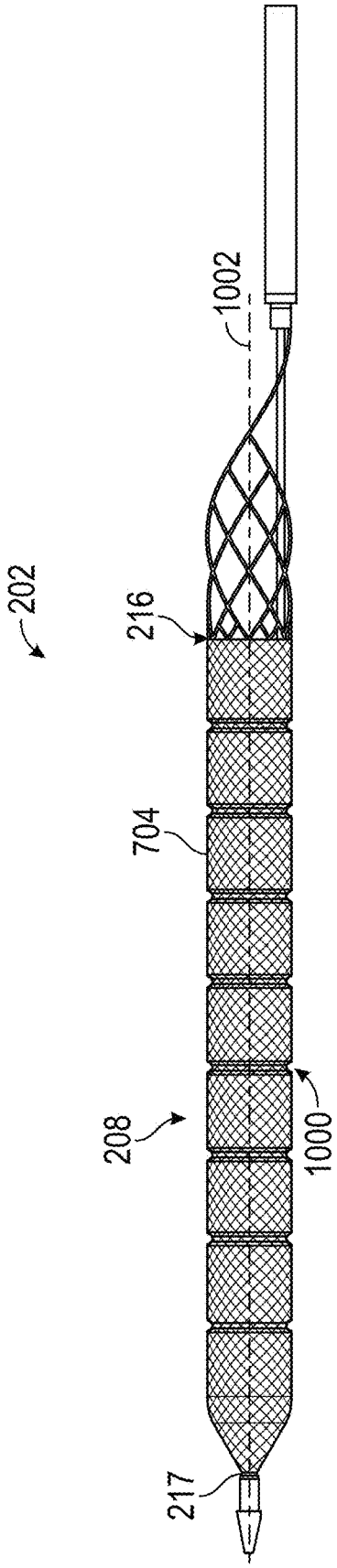

Figure 10

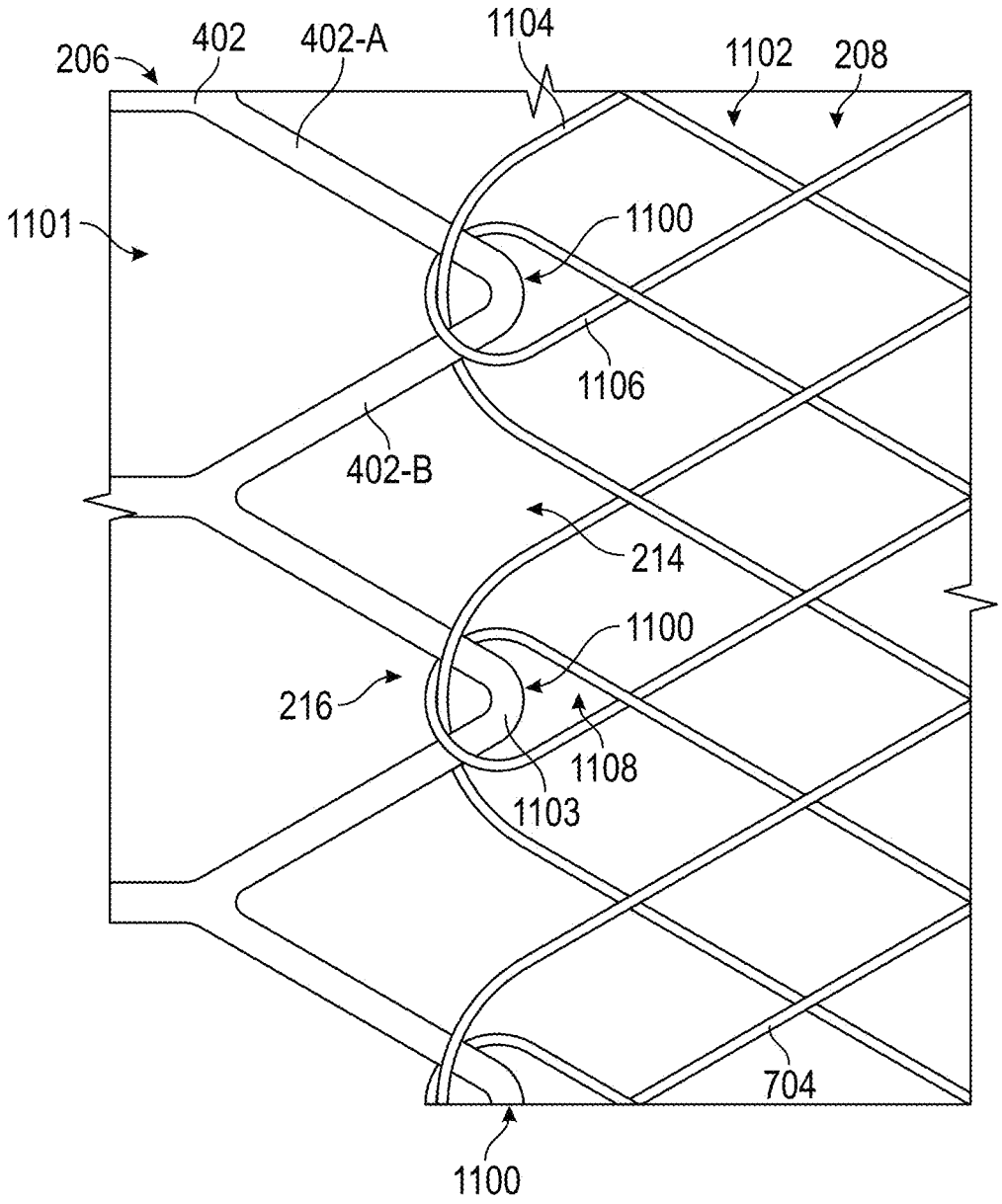
206
402
402-A
1104
1102
208
1101
1100
1106
402-B
214
1100
216
1108
1103
704
1100

Figure 11

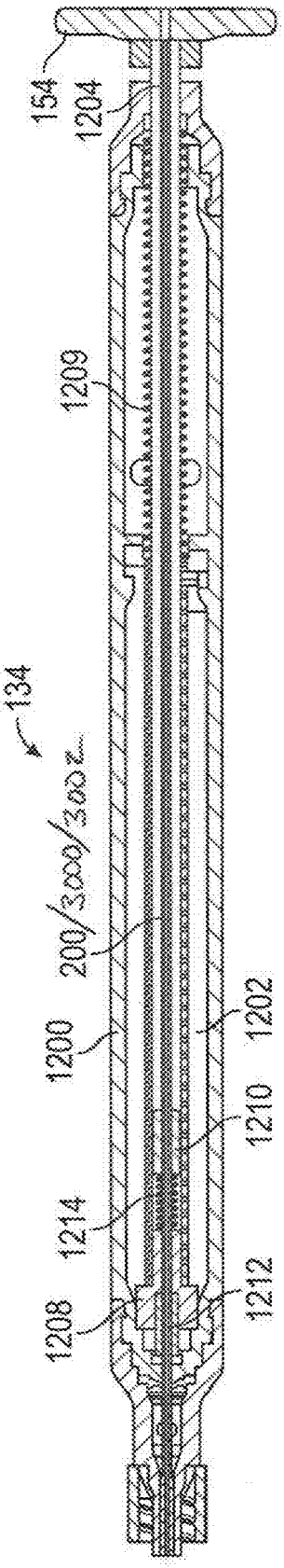

Figure 12

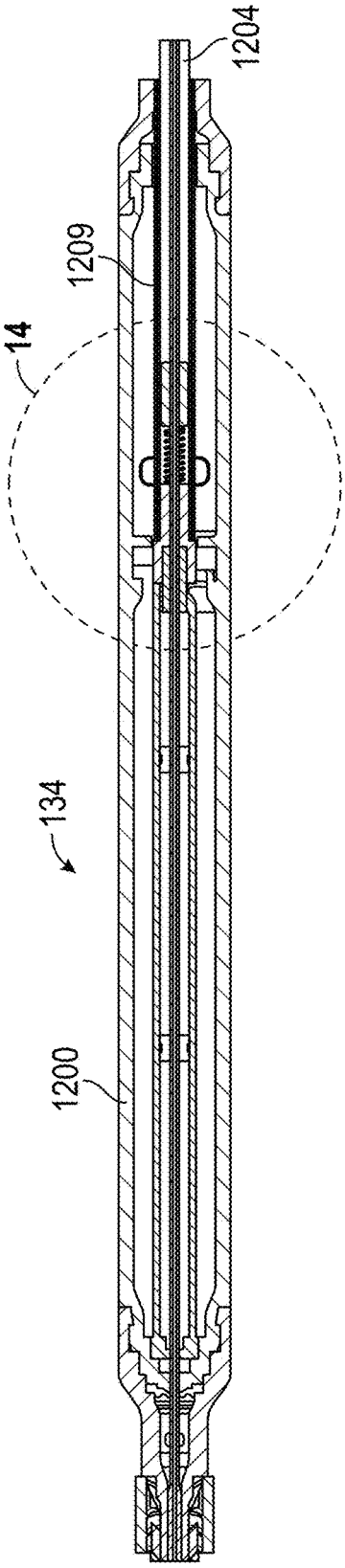

Figure 13

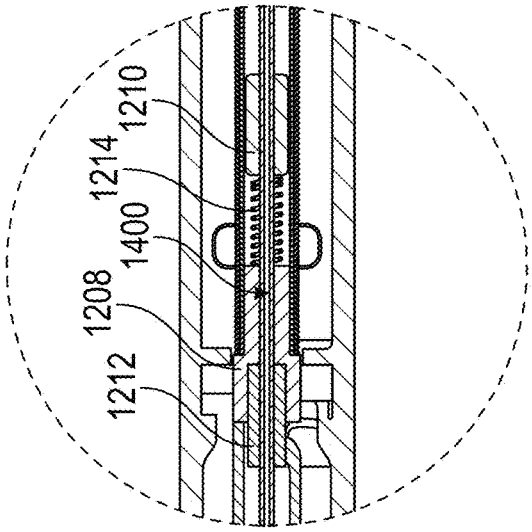

Figure 14

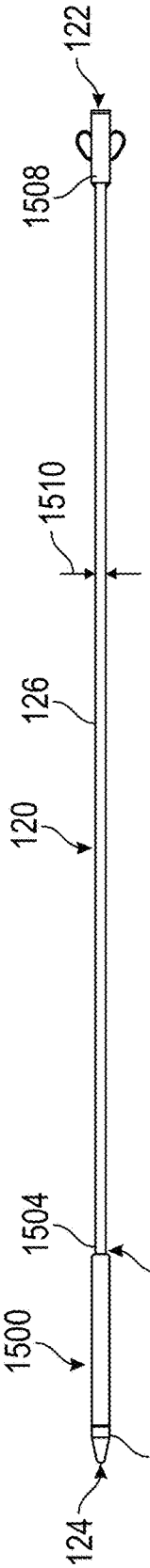

Figure 15

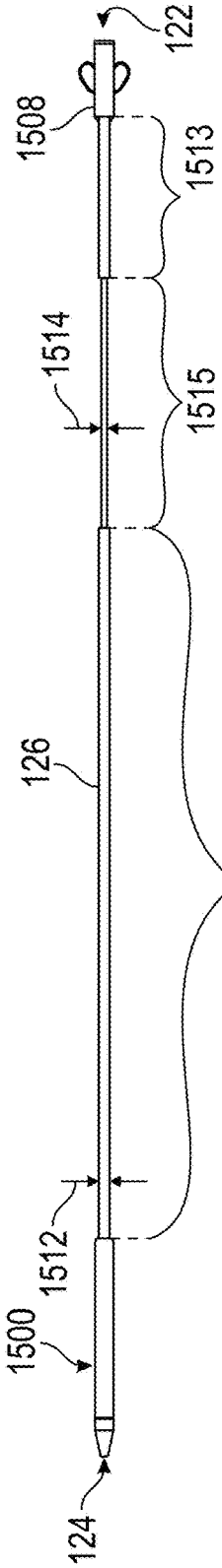

Figure 16

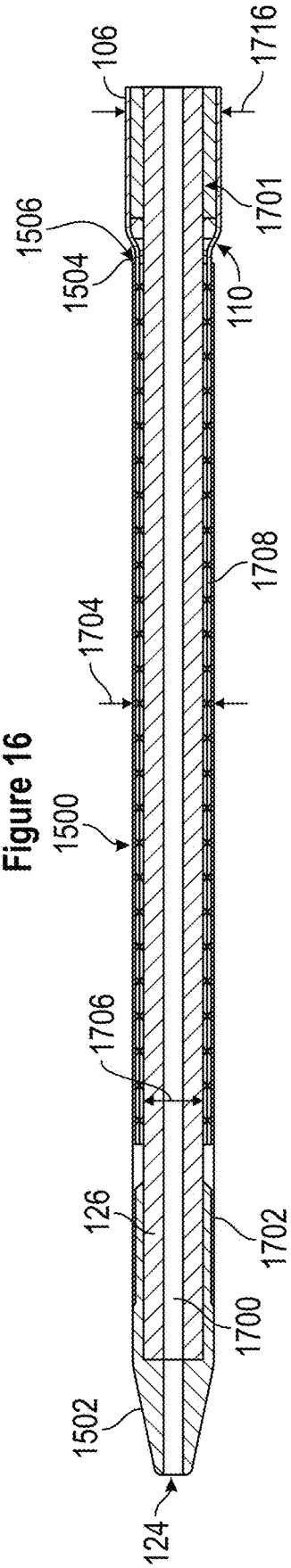

Figure 17

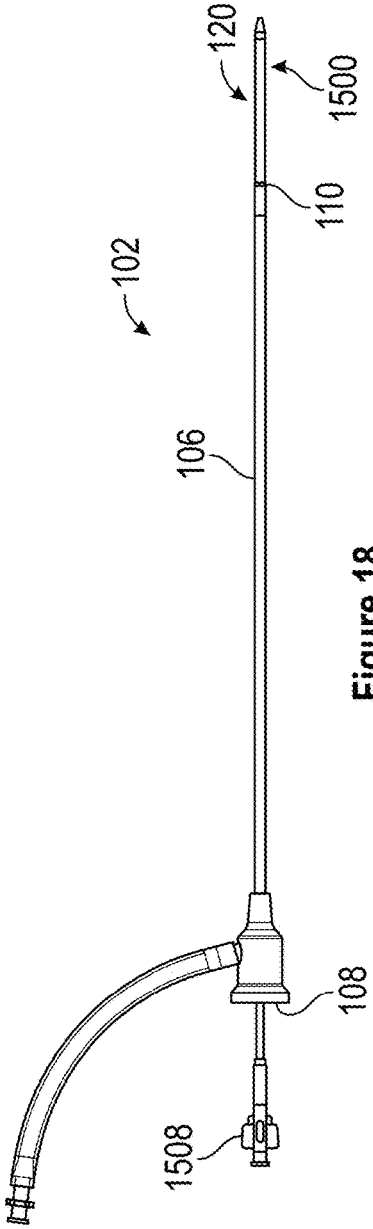

Figure 18

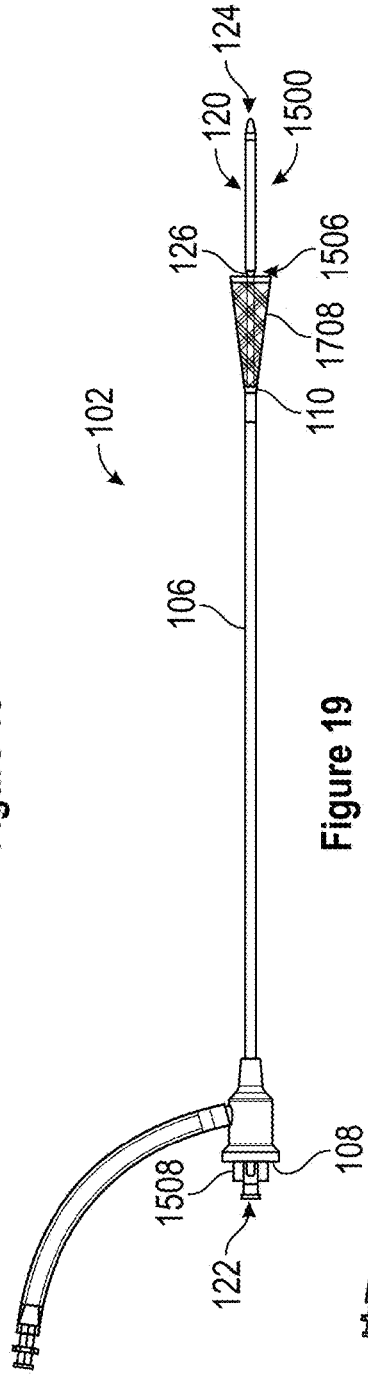

Figure 19

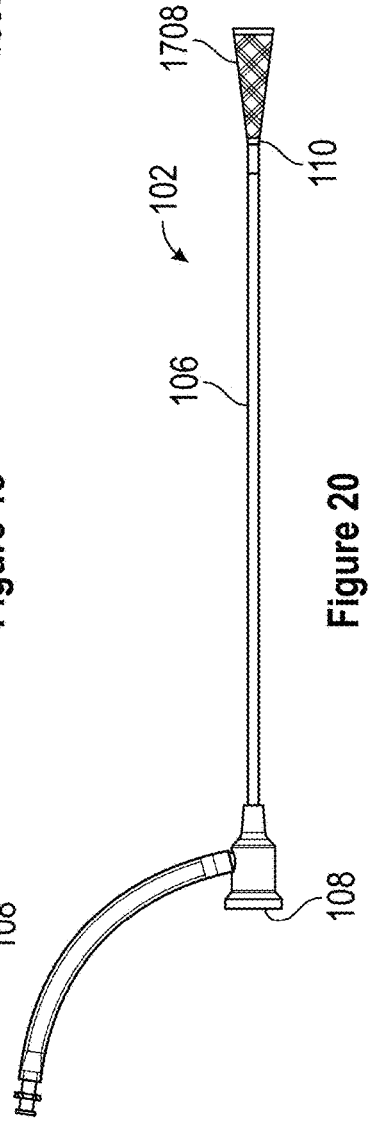

Figure 20

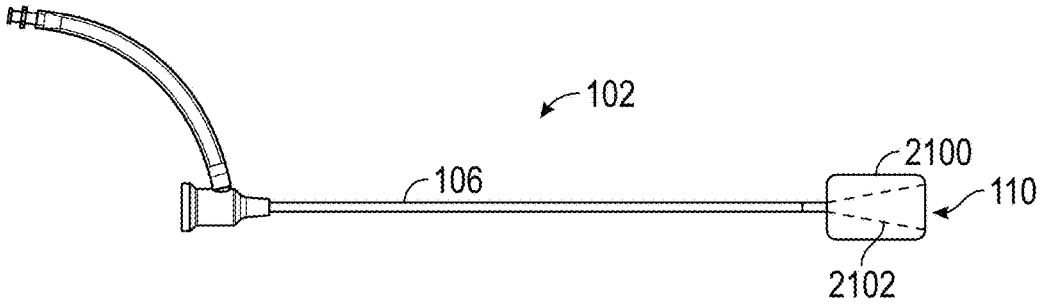

Figure 21

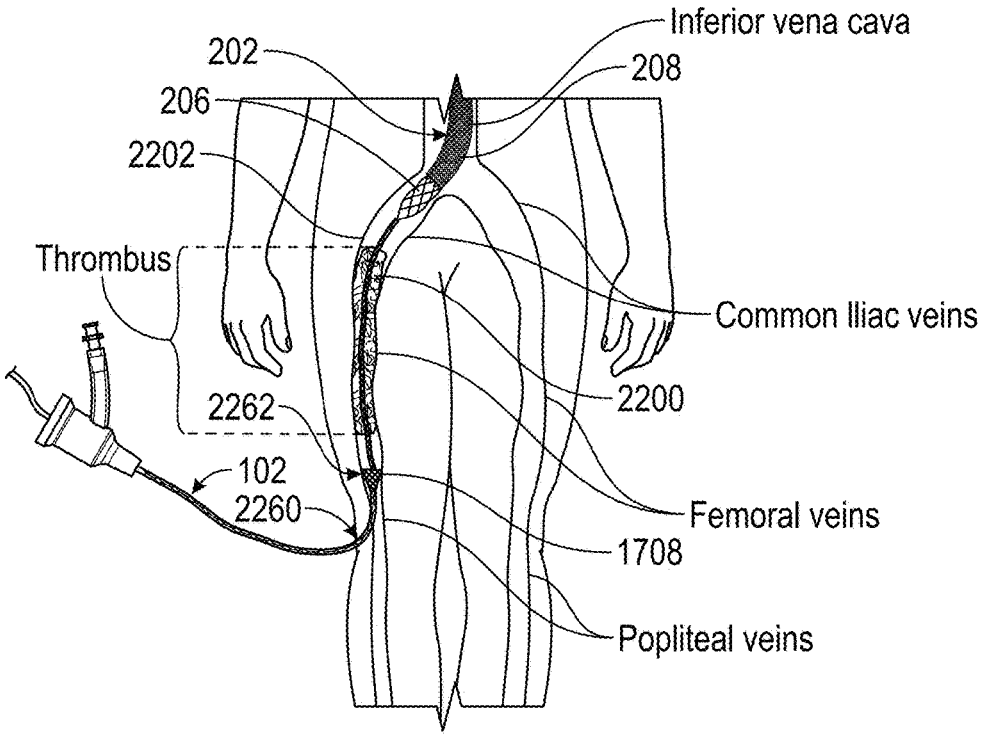

Figure 22

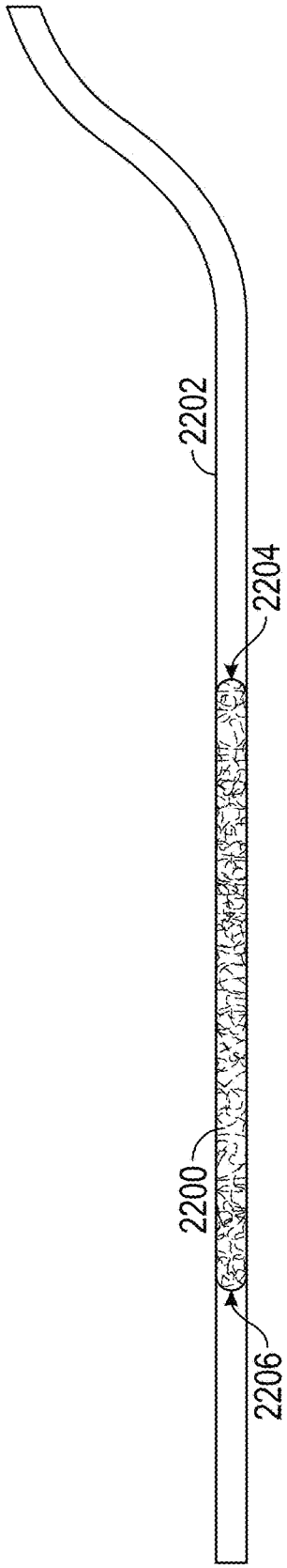

Figure 23-A

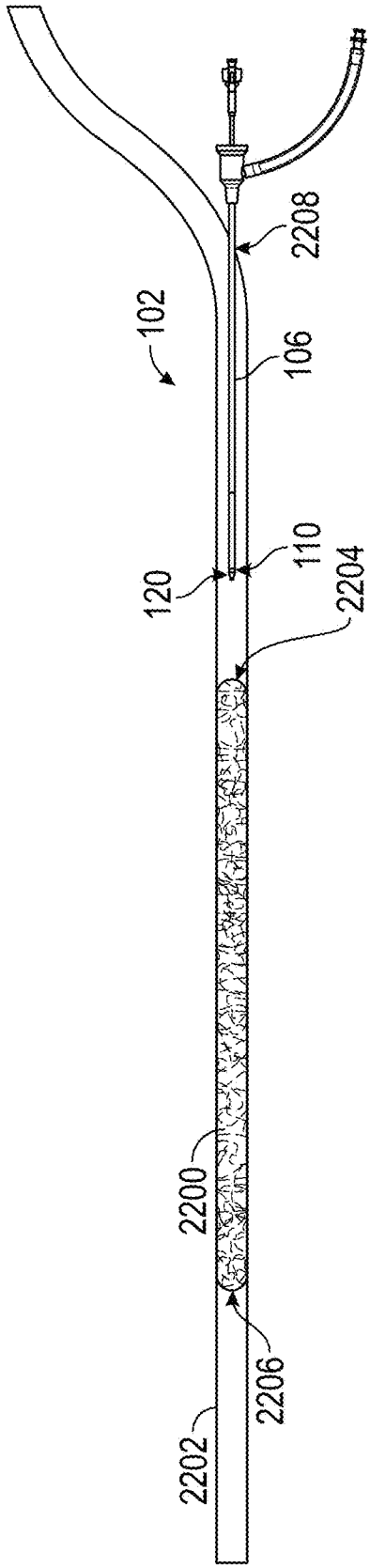

Figure 23-B

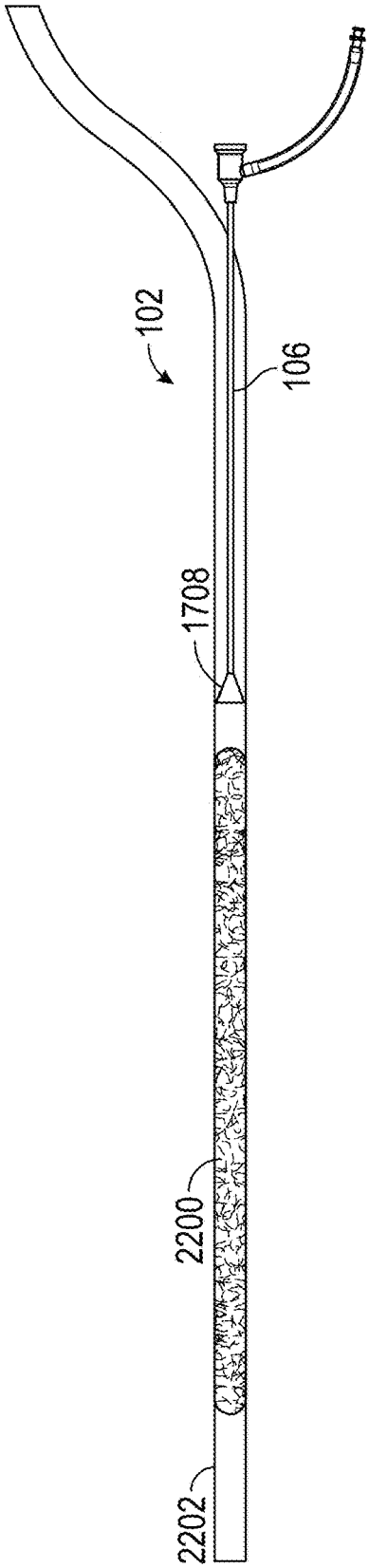

Figure 23-C

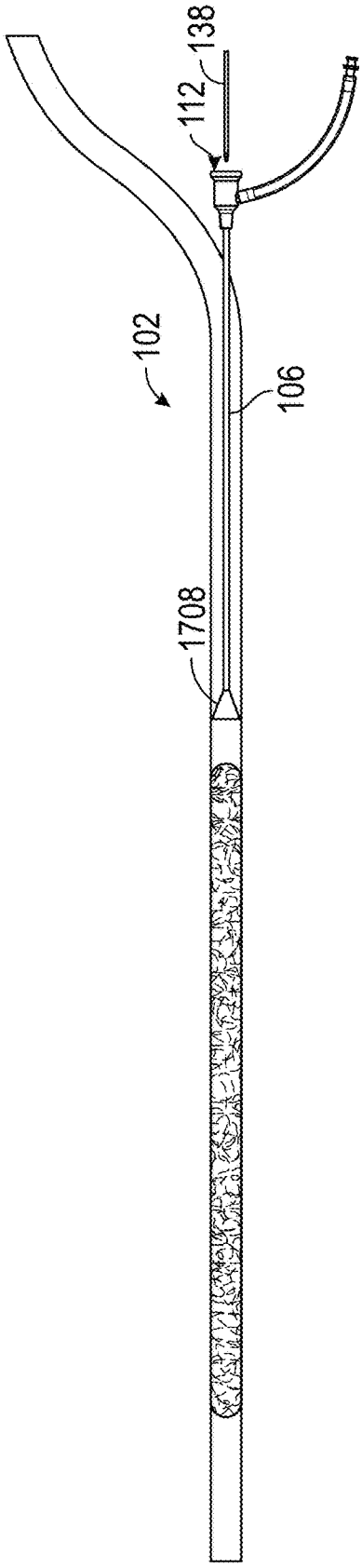

Figure 23-D

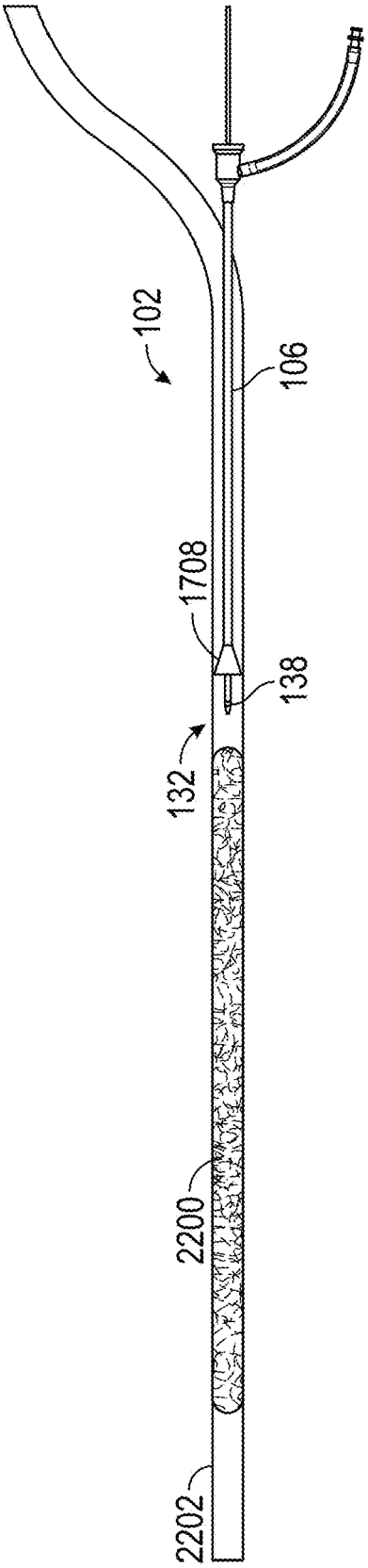

Figure 23-E

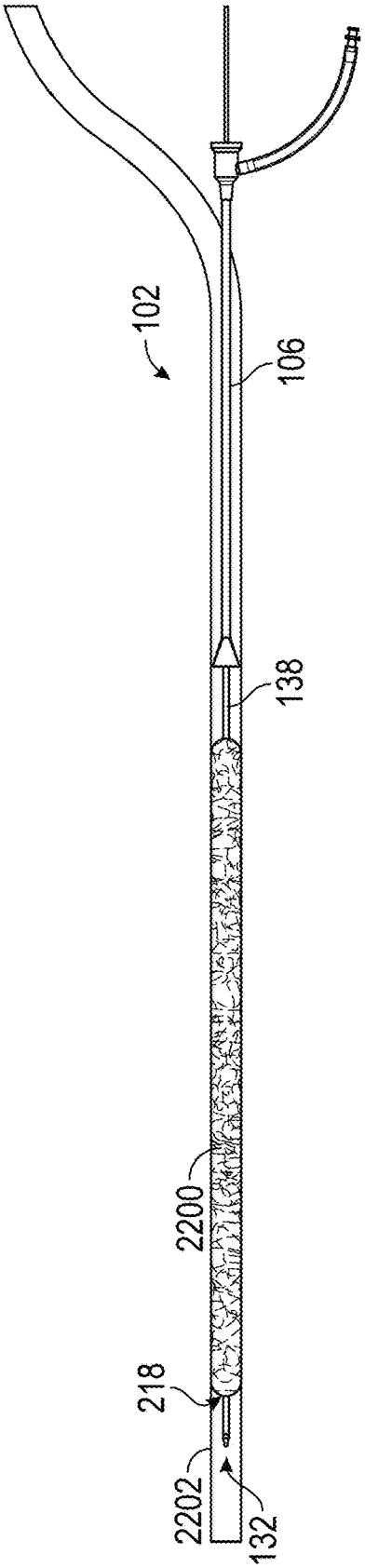

Figure 23-F

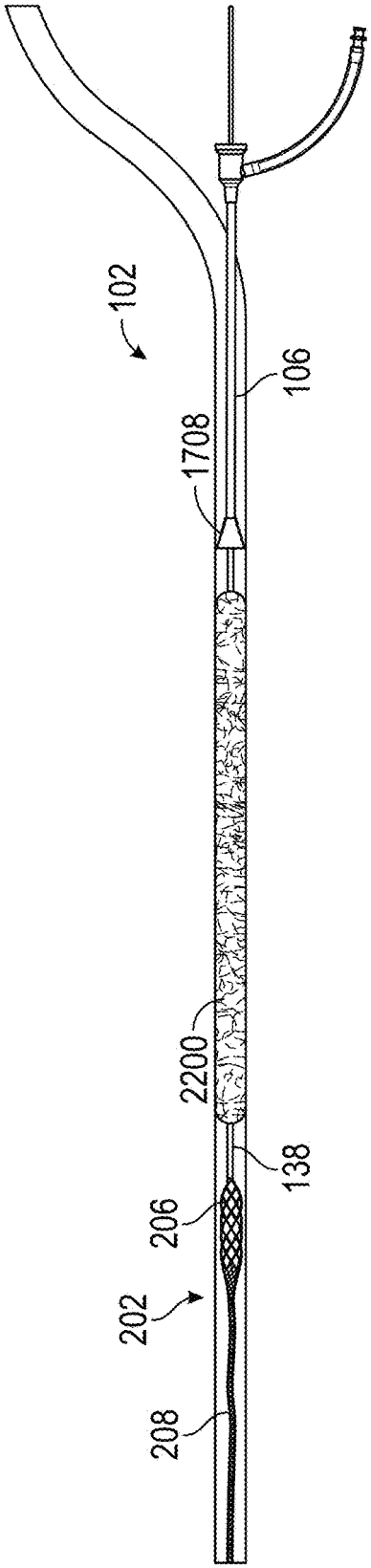

Figure 23-G

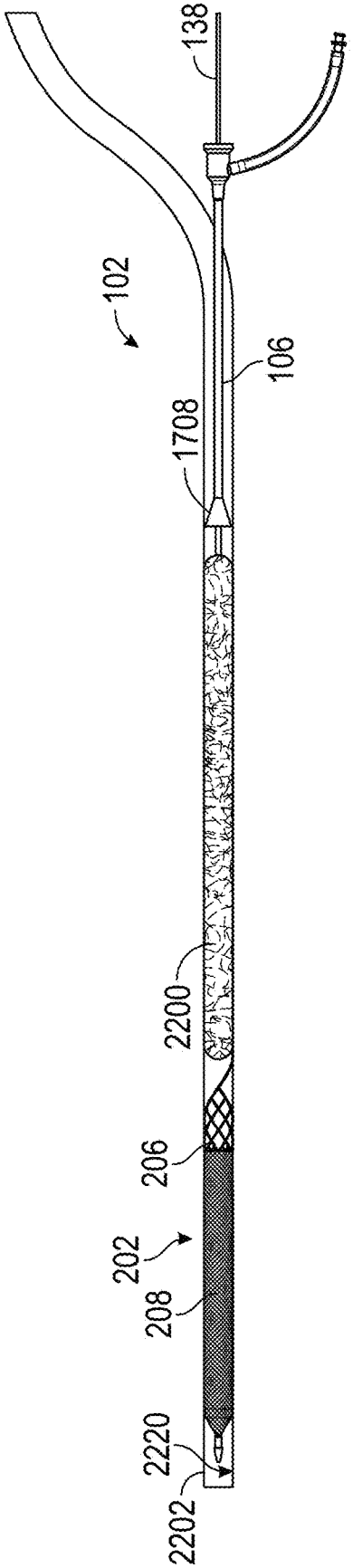

Figure 23-H

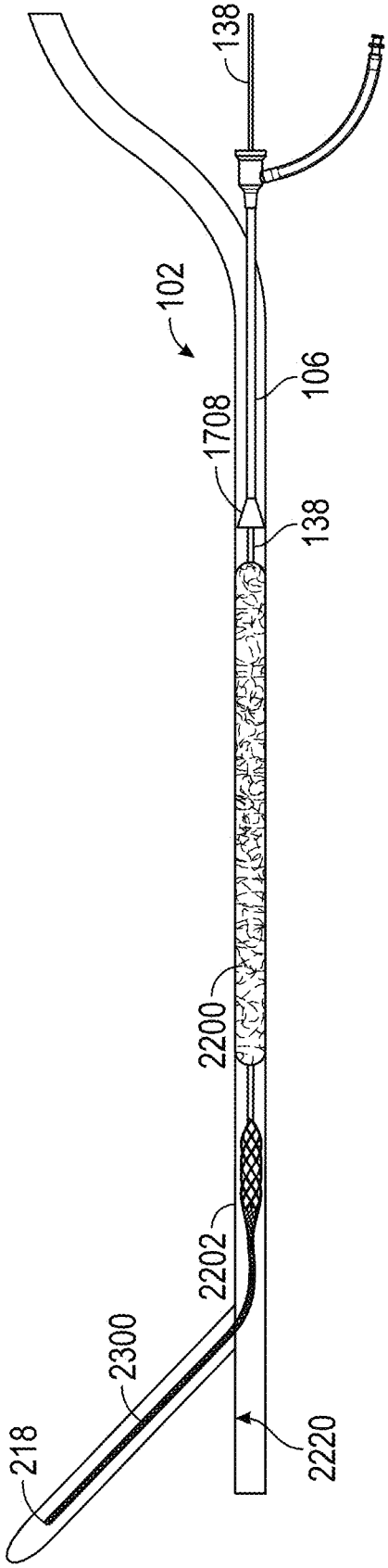

Figure 24-A

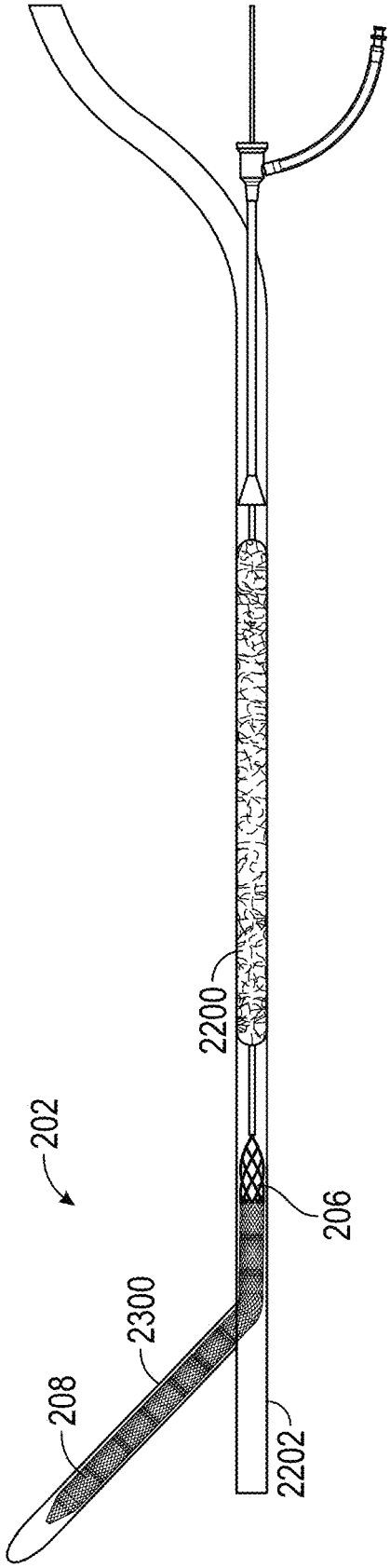

Figure 24-B

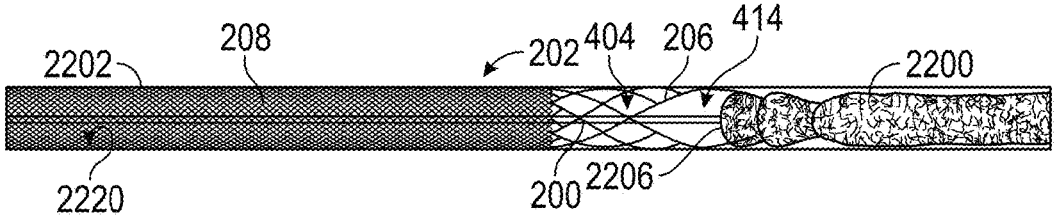

Figure 25-A

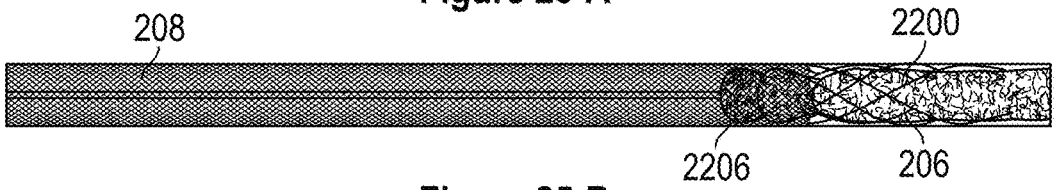

Figure 25-B

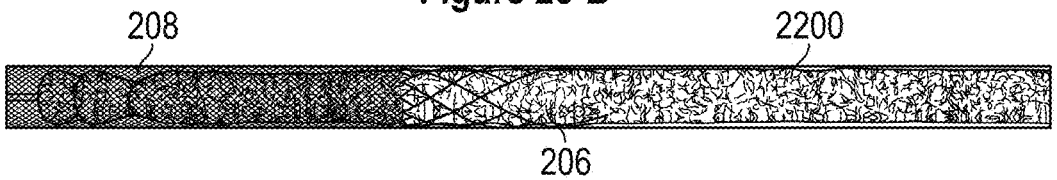

Figure 25-C

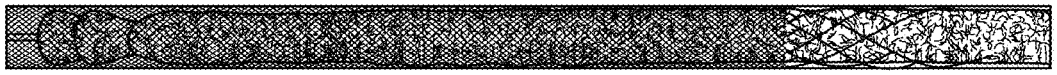

Figure 25-D

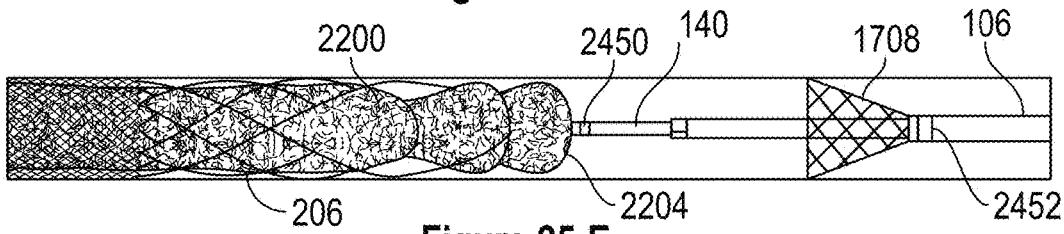

Figure 25-E

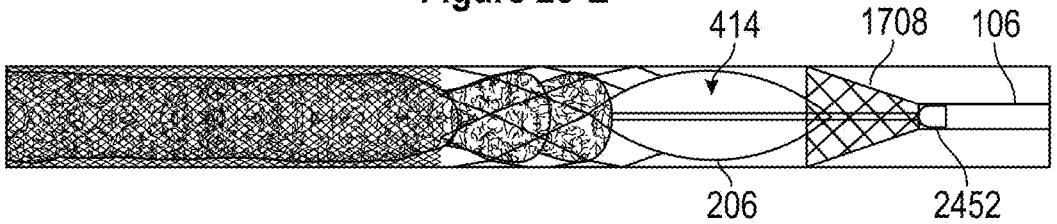

Figure 25-F

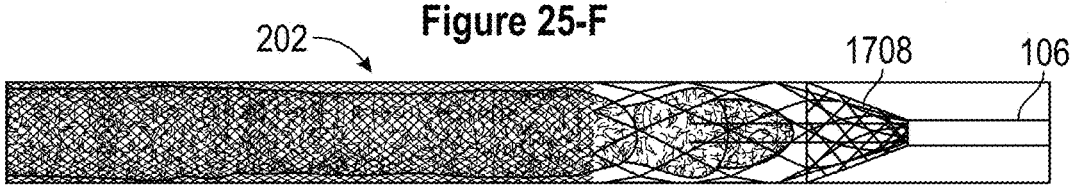

Figure 25-G

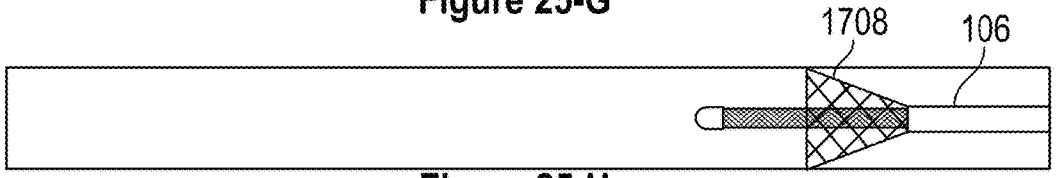

Figure 25-H

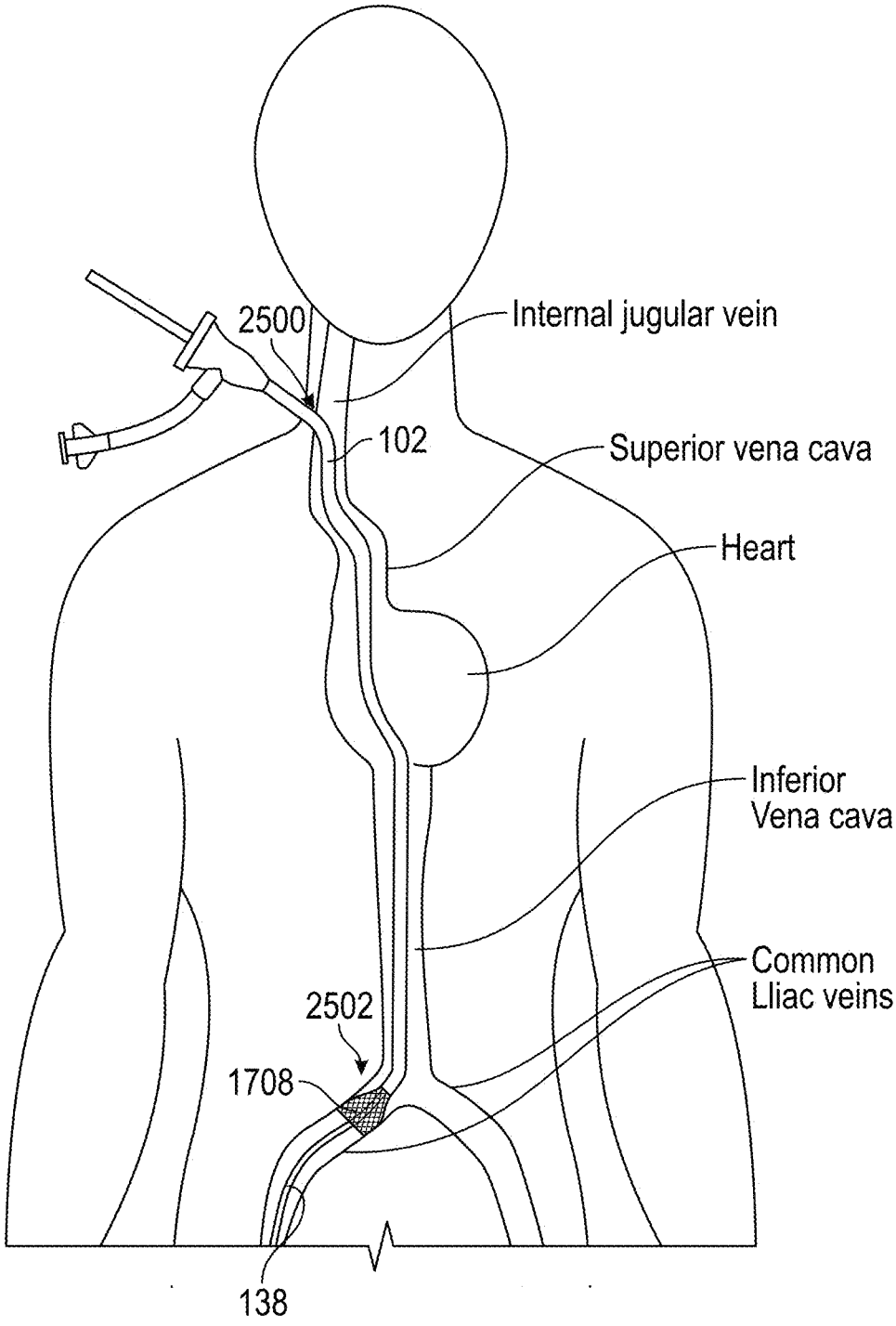
2500
Internal jugular vein
102
Superior vena cava
Heart
Inferior
Vena cava
Common
Lliac veins
2502
1708
138

Figure 26

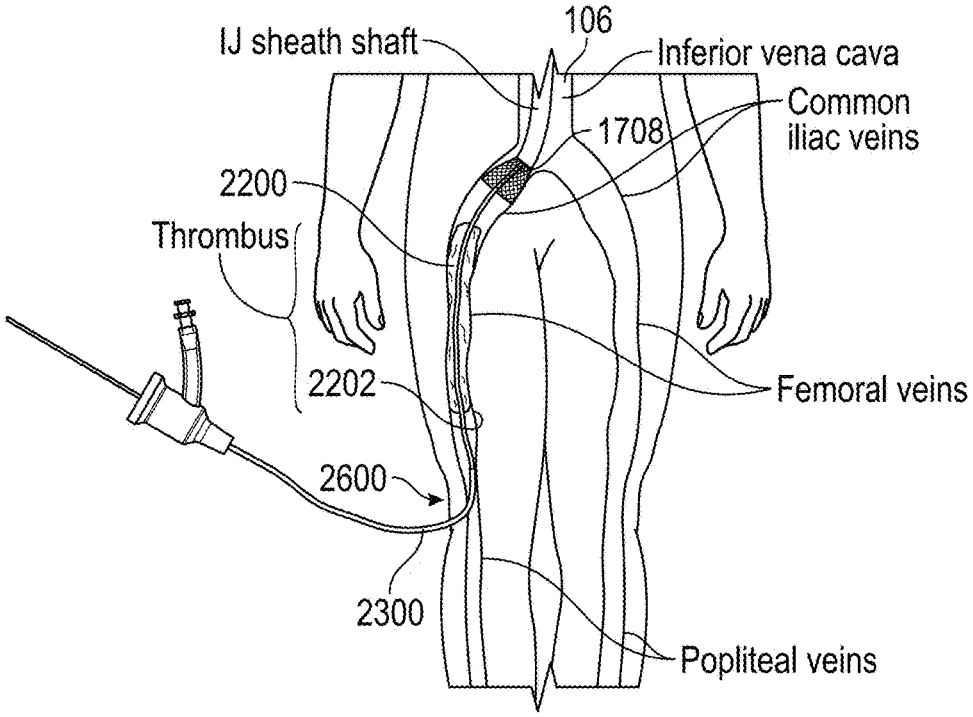

Figure 27

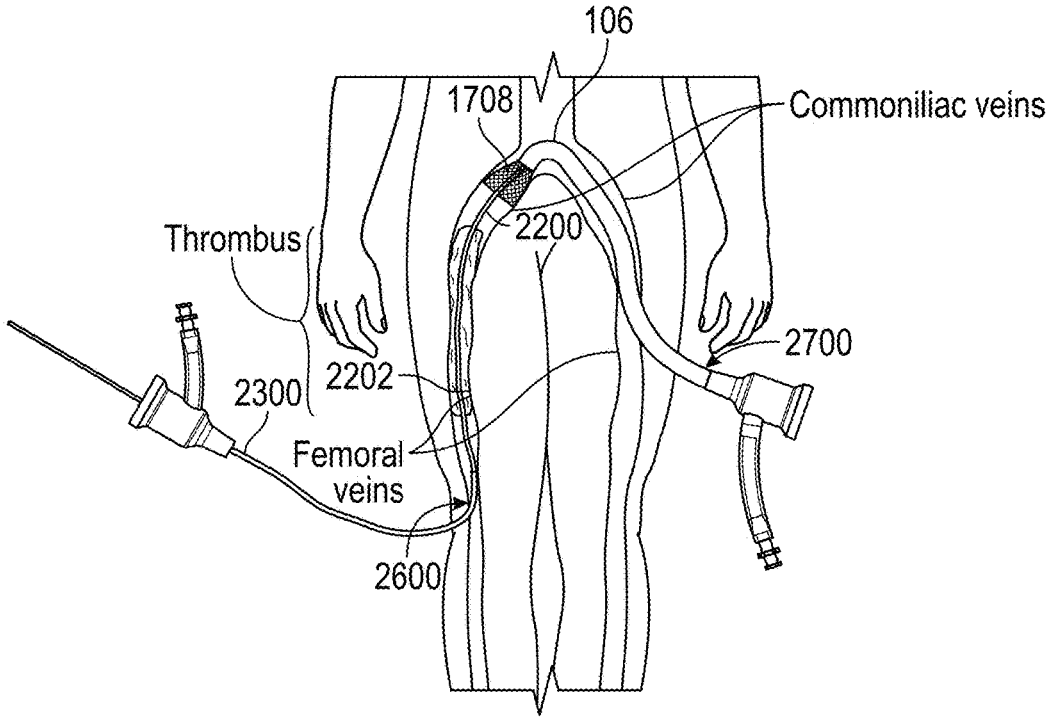

Figure 28

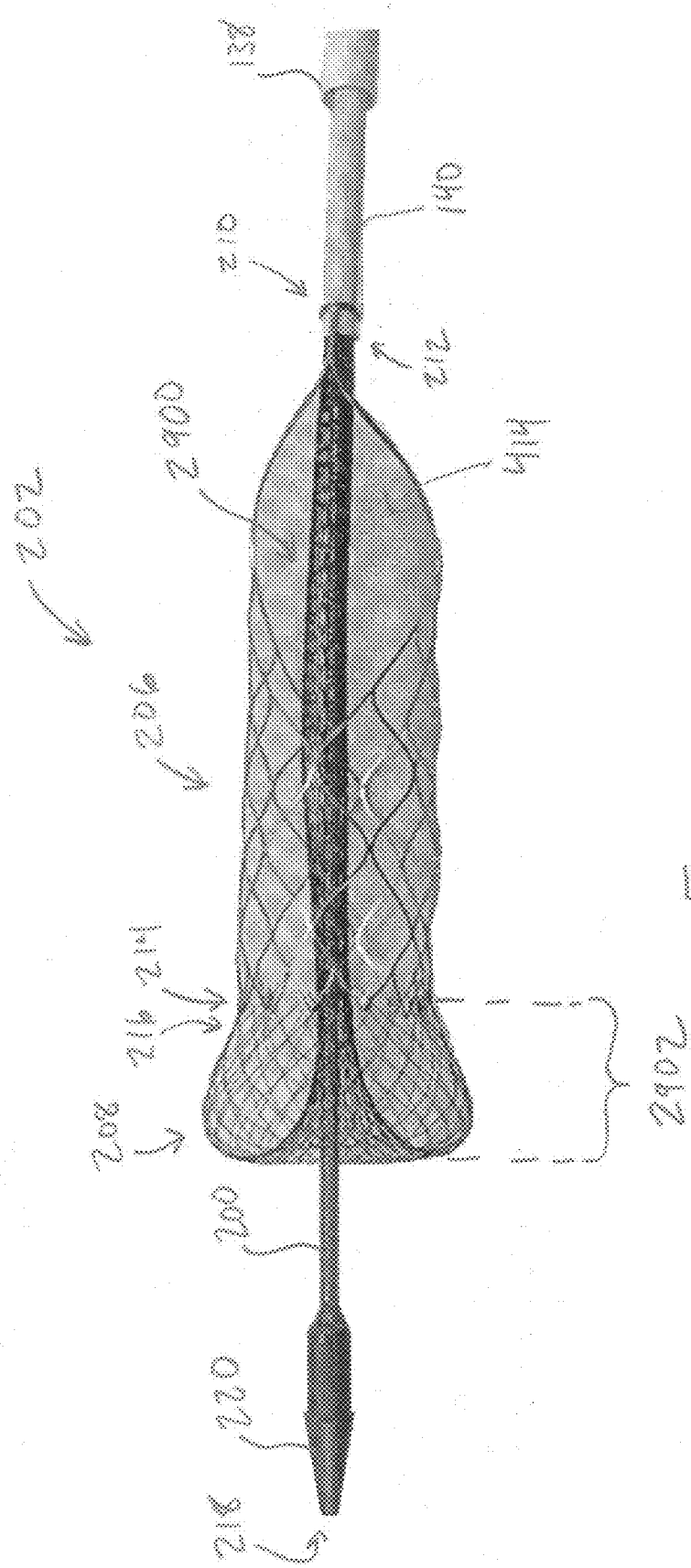

Figure 29

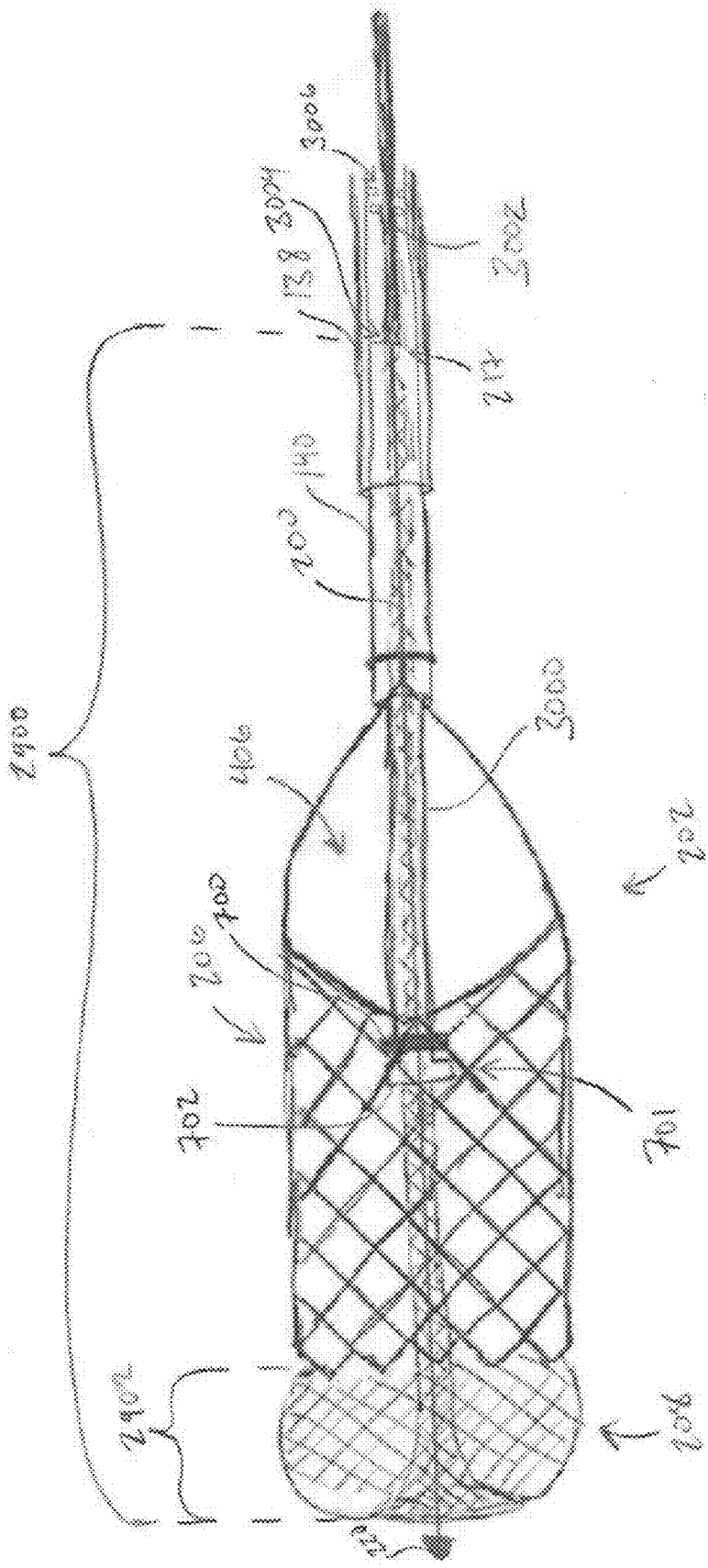
3006
3004
138
3002
217
140
200
2900
406
3000
202
700
206
702
701
2902
208
220

Figure 30

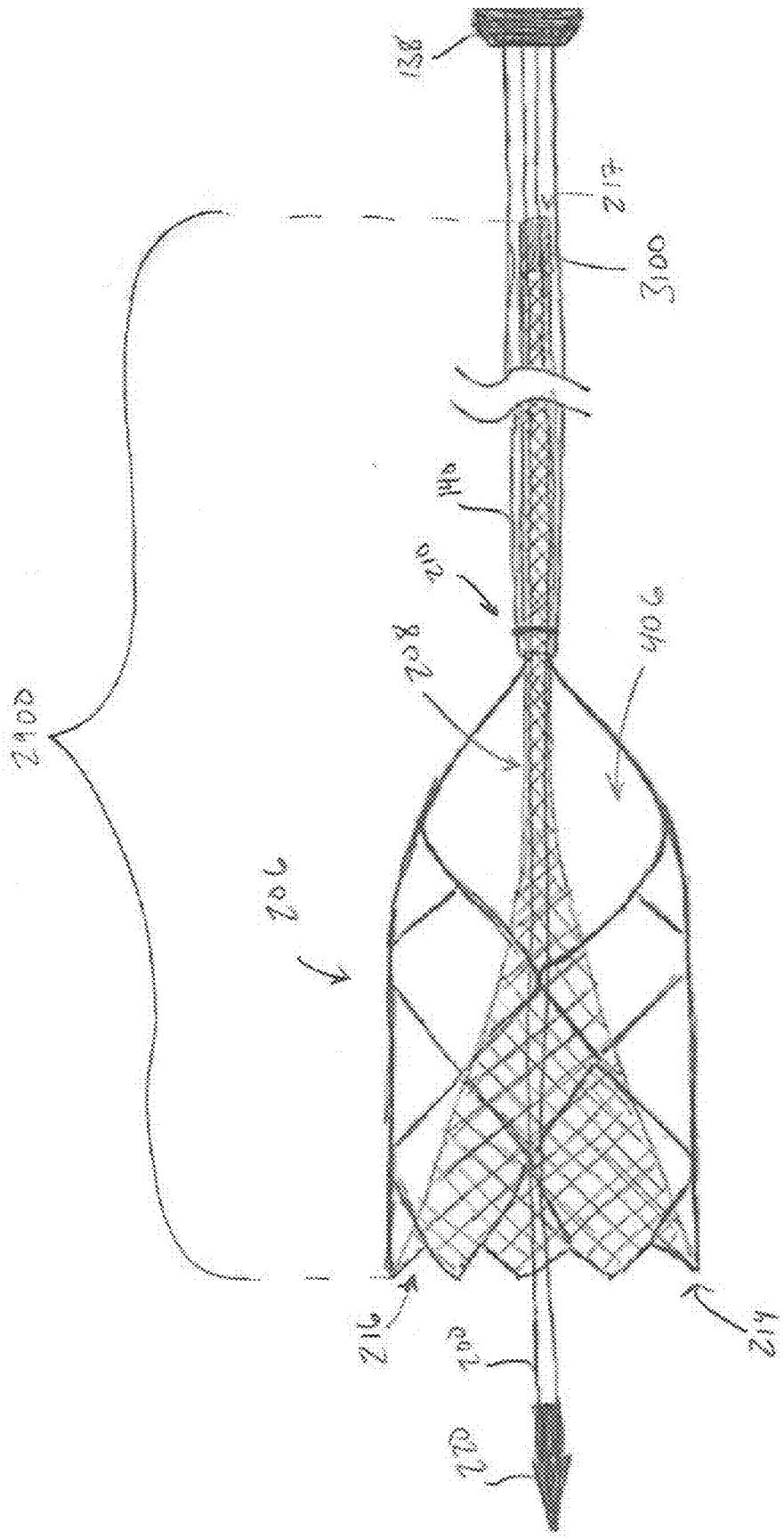

Figure 31

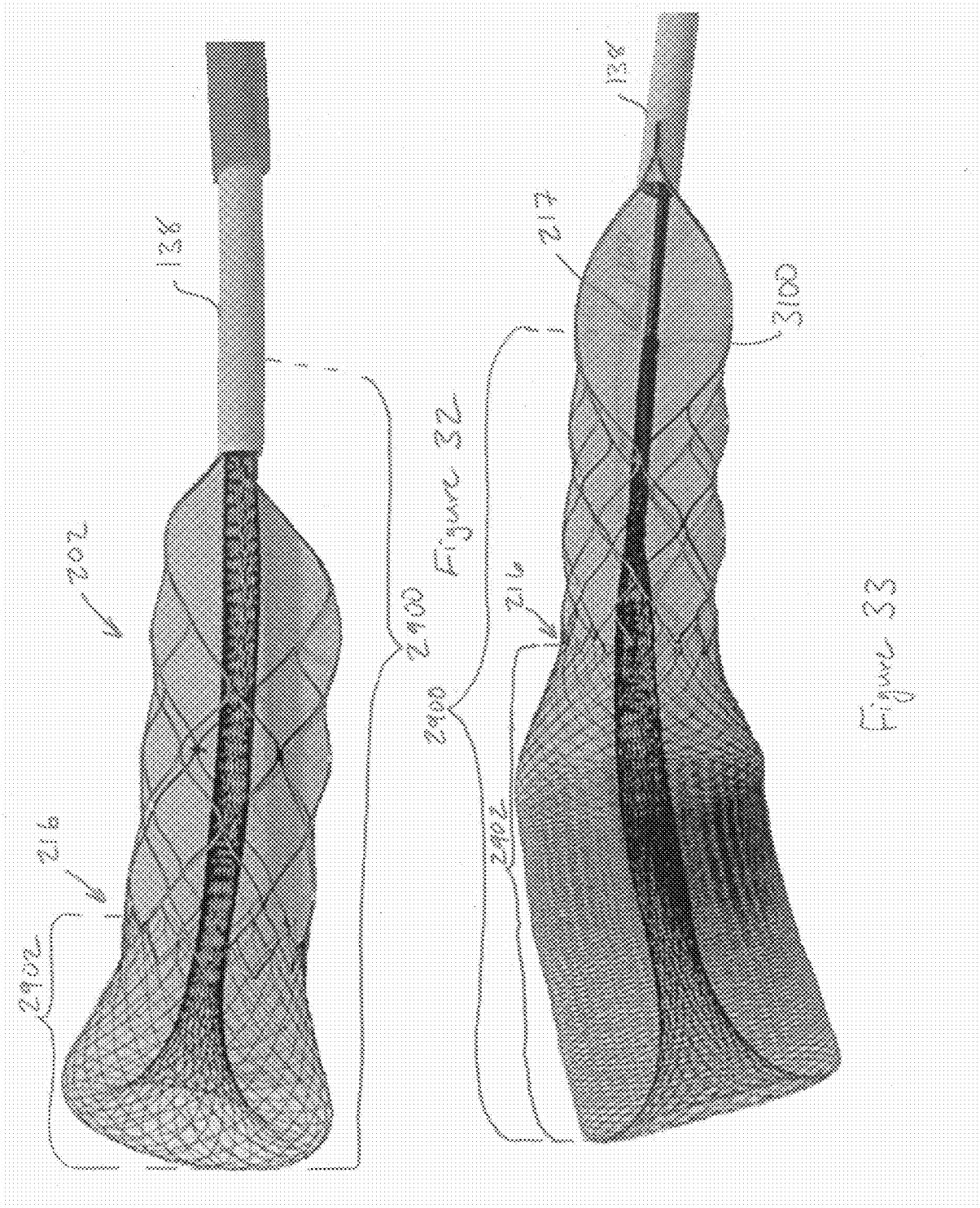
138
202
216
2902
2900
Figure 32
138
217
3100
216
2900
2902
Figure 33

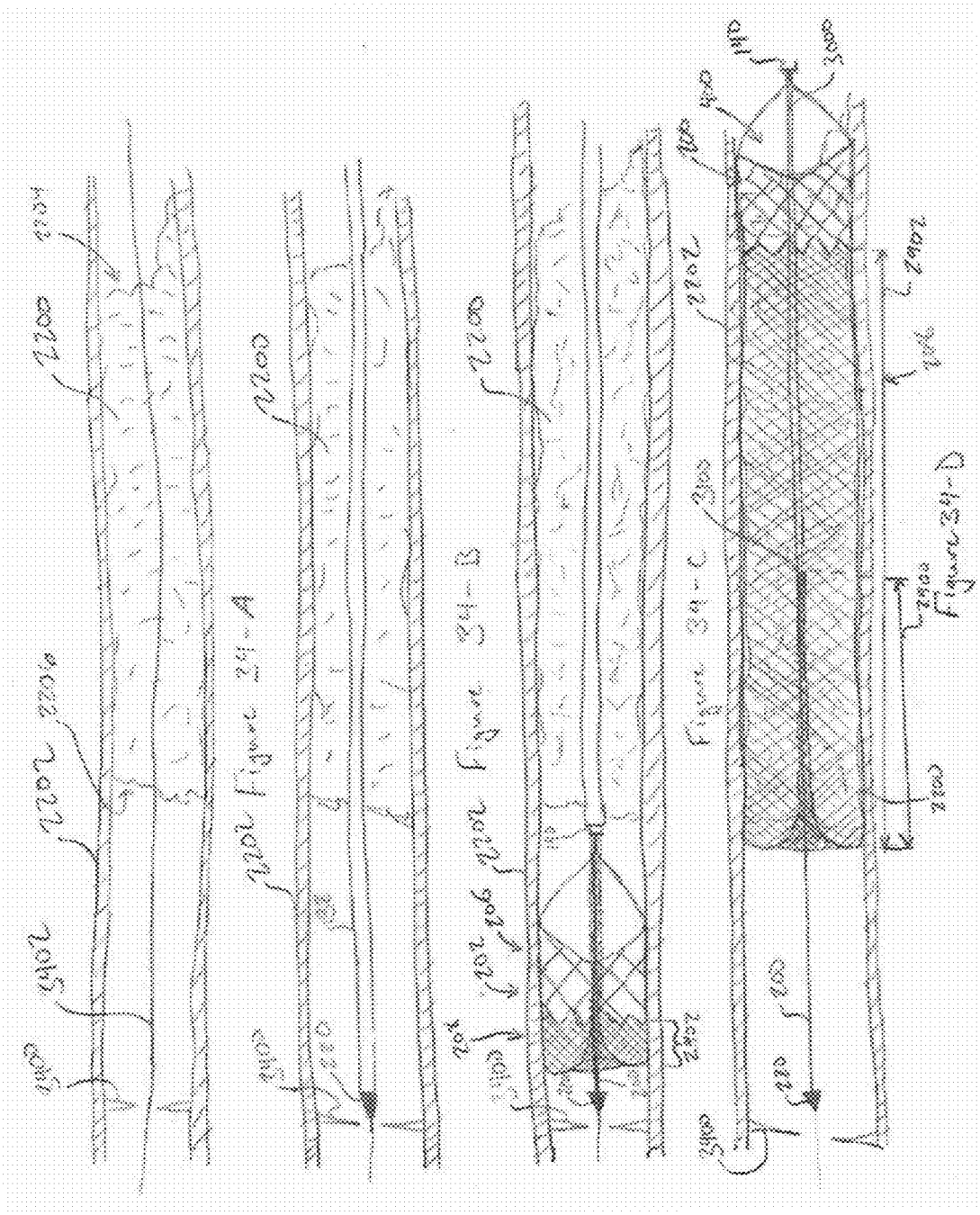
Figure 34-A
Figure 34-B
Figure 34-C
Figure 34-D

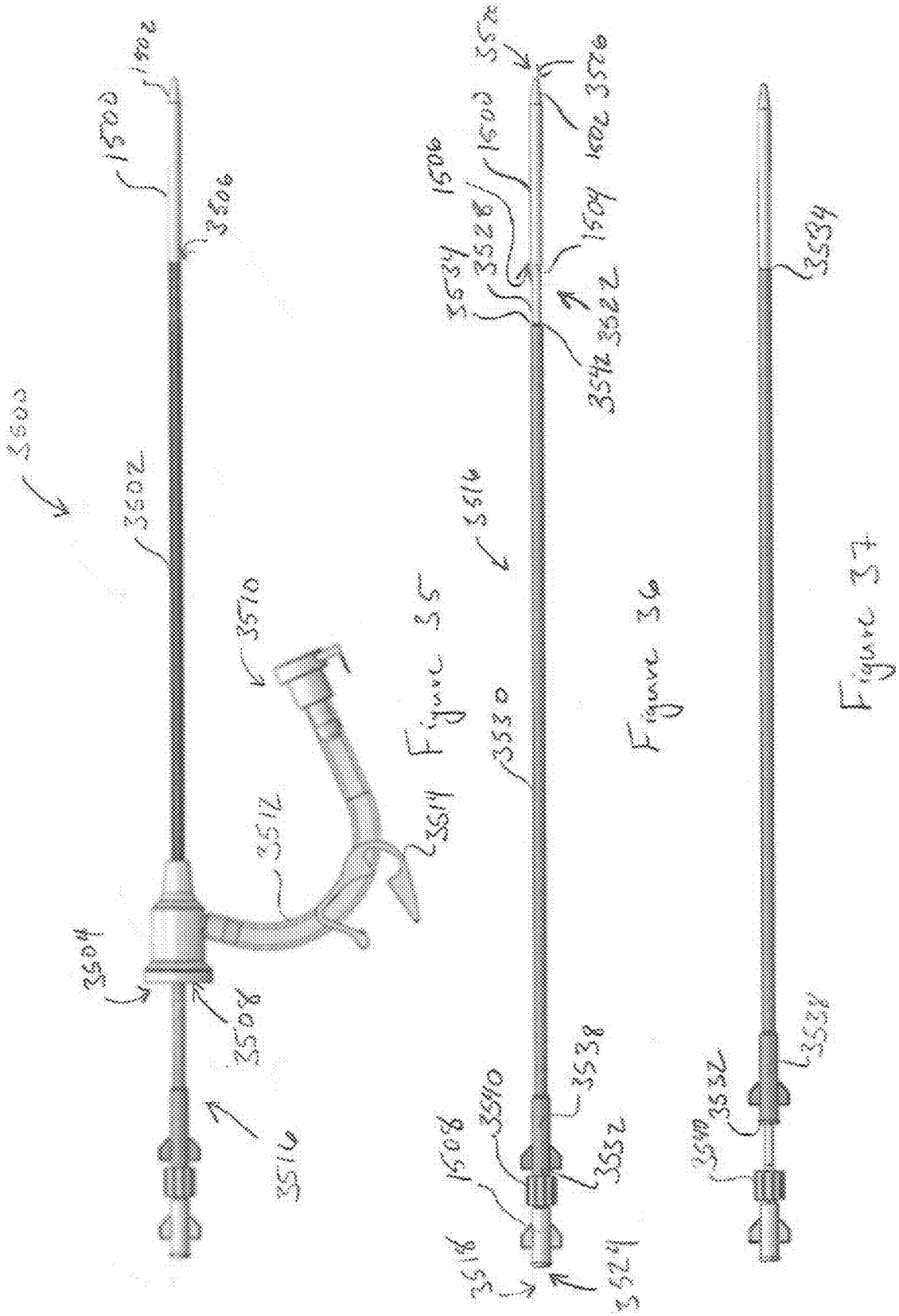

Figure 35

Figure 36

Figure 37

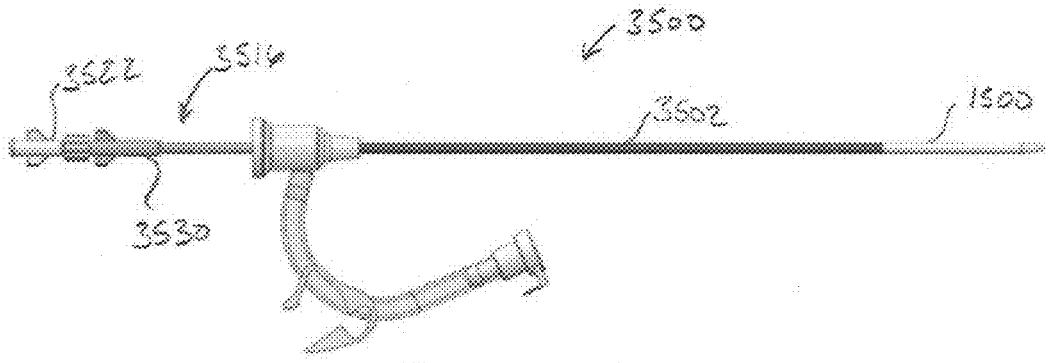

Figure 38-A

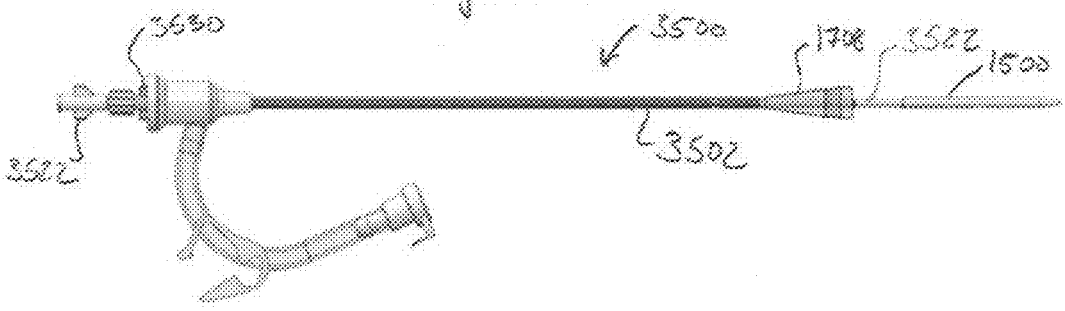

Figure 38-B

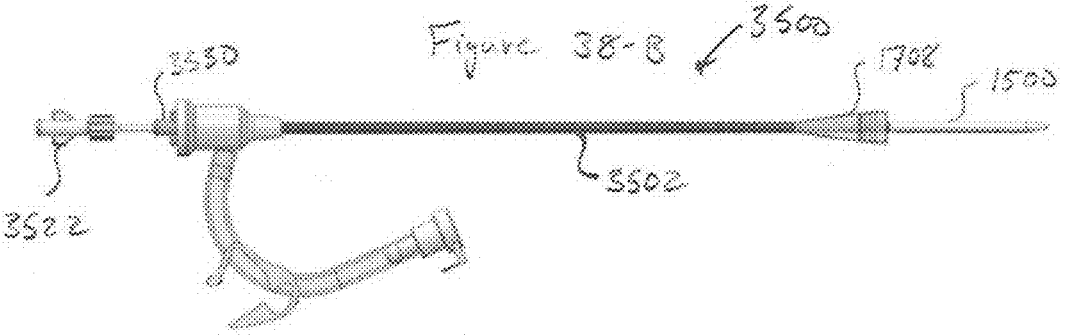

Figure 38-C

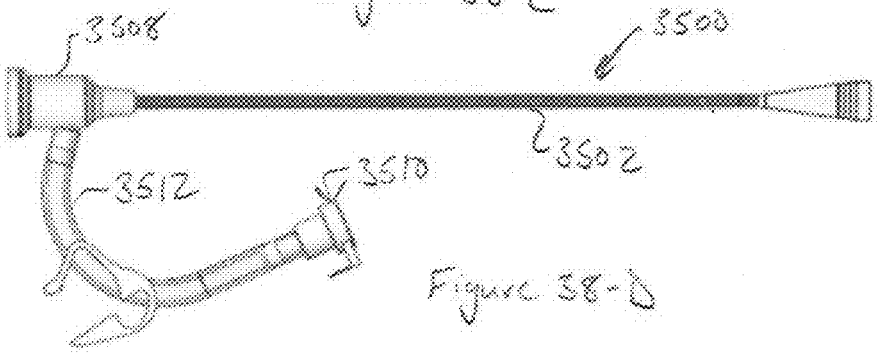

Figure 38-D

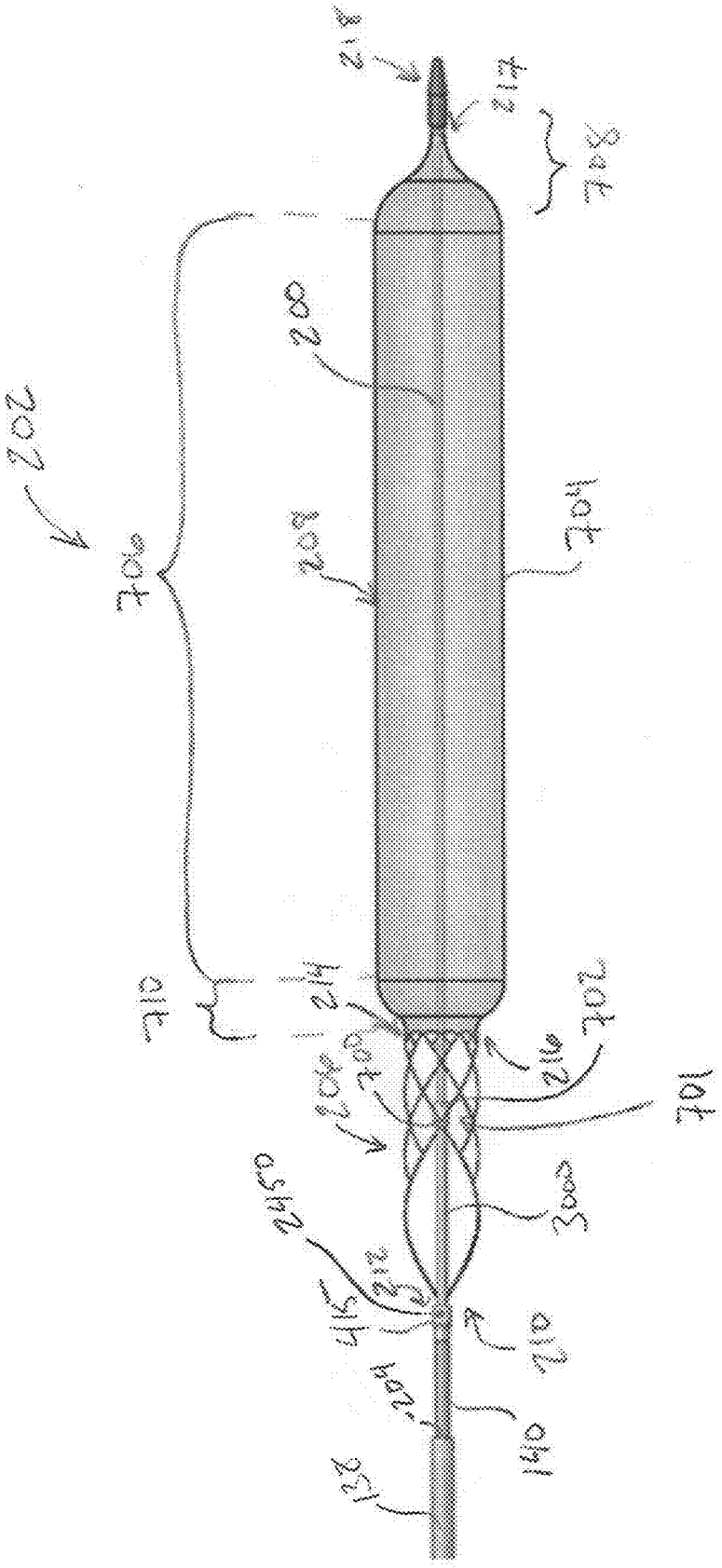
218
217
708
200
202
706
208
704
710
214
702
216
700
206
701
2450
3000
212
415
210
204
140
138

Figure 39

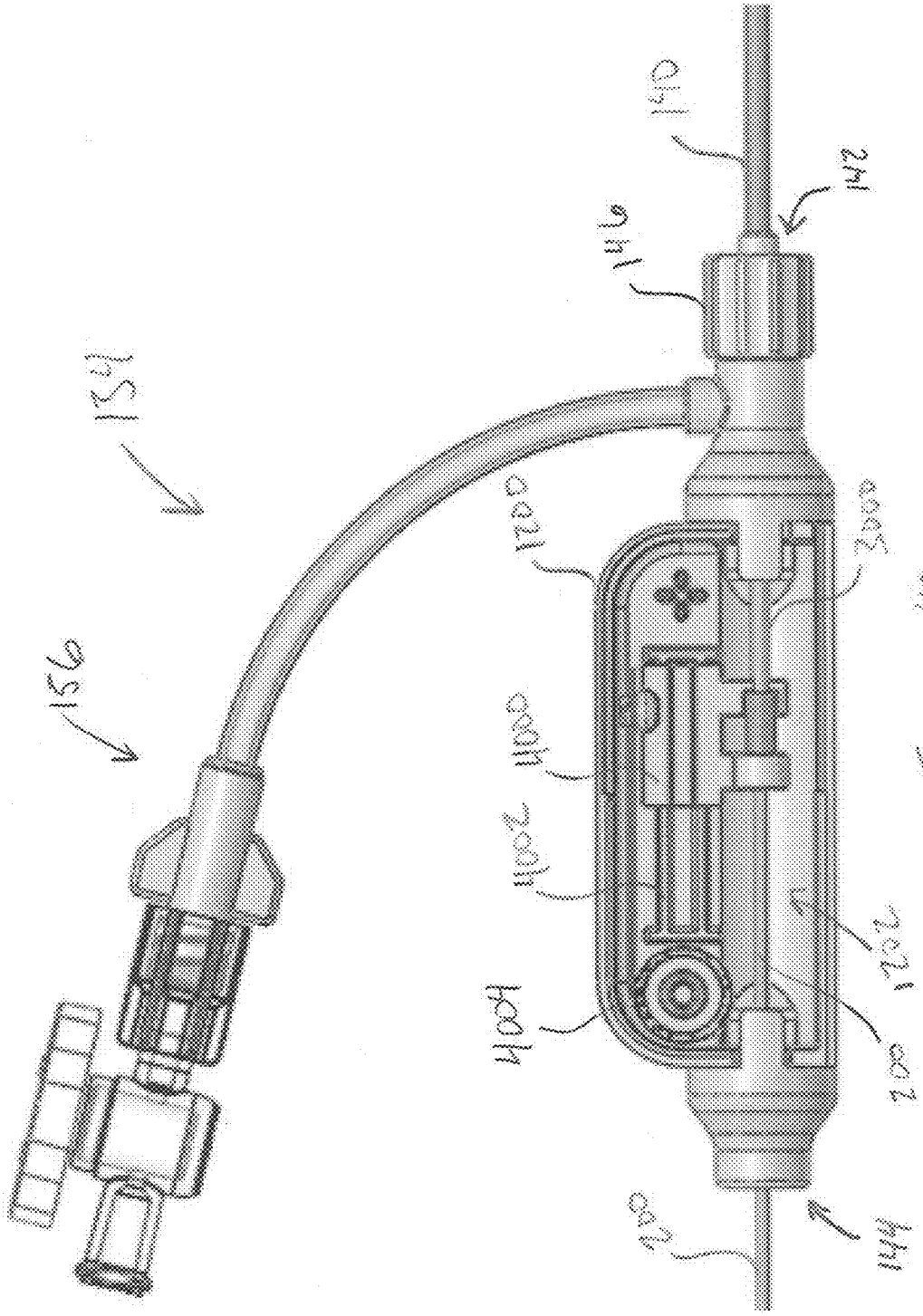

Figure 40

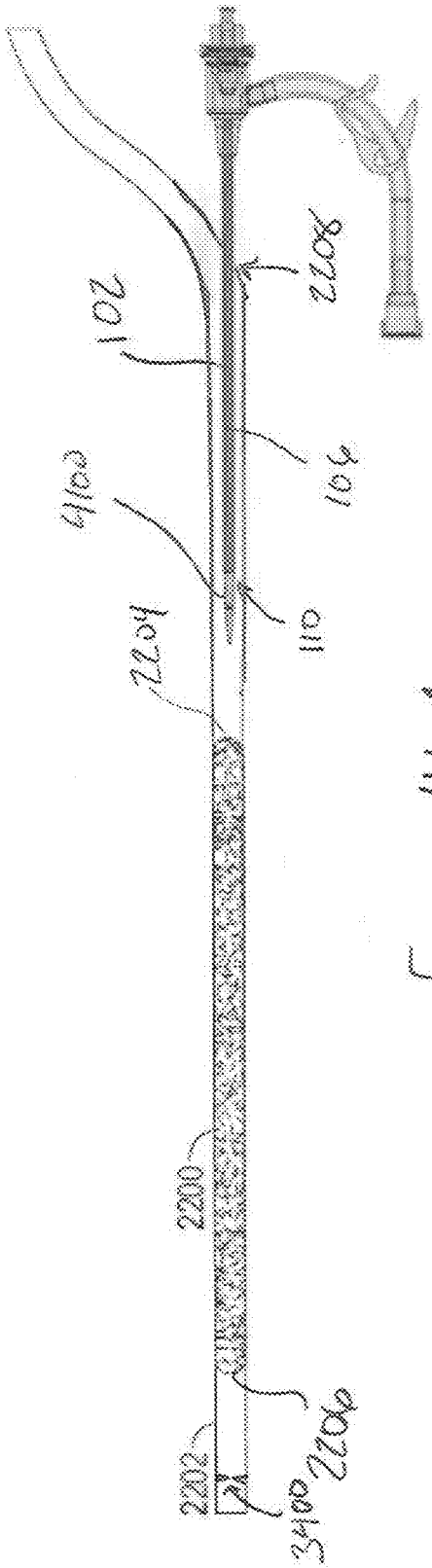

Figure 41-A

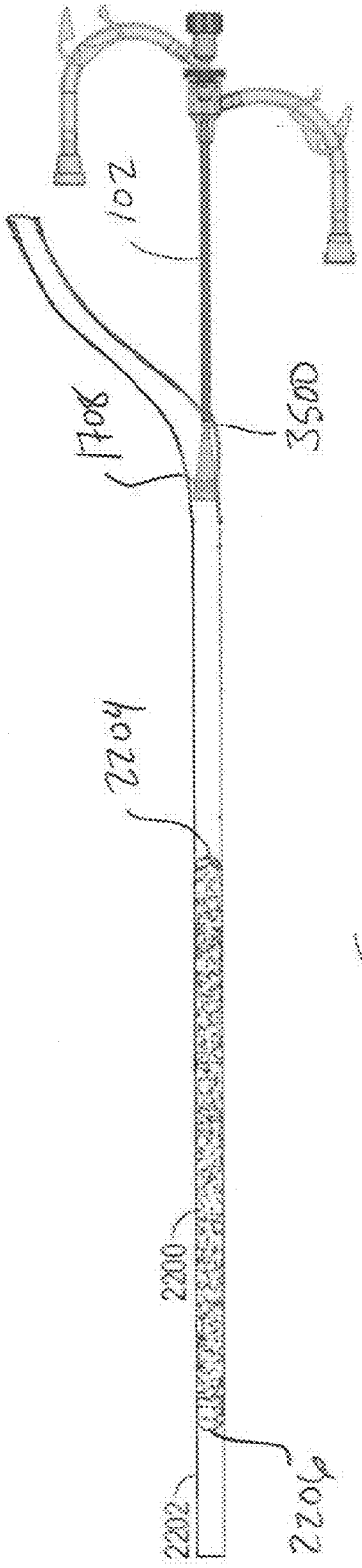

Figure 41-B

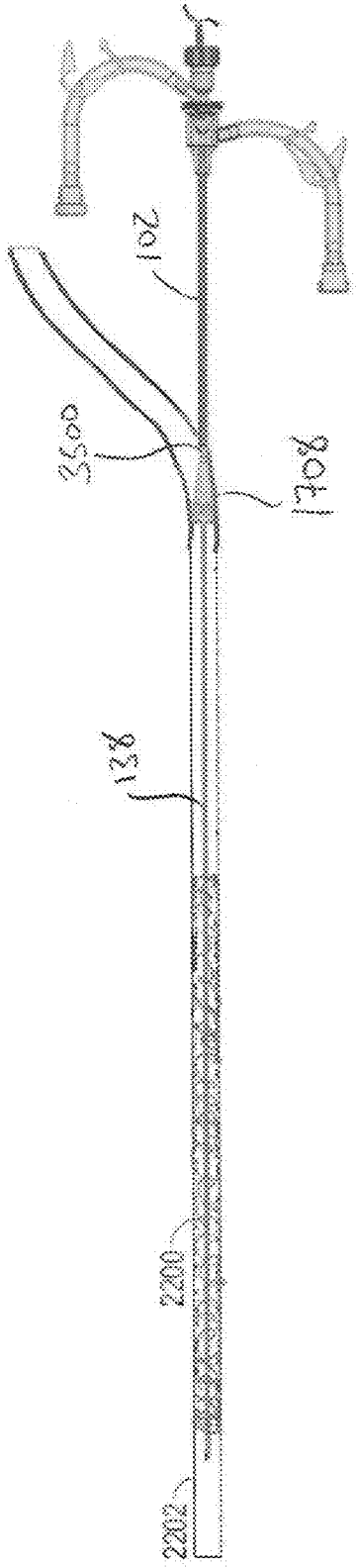

Figure 41-C

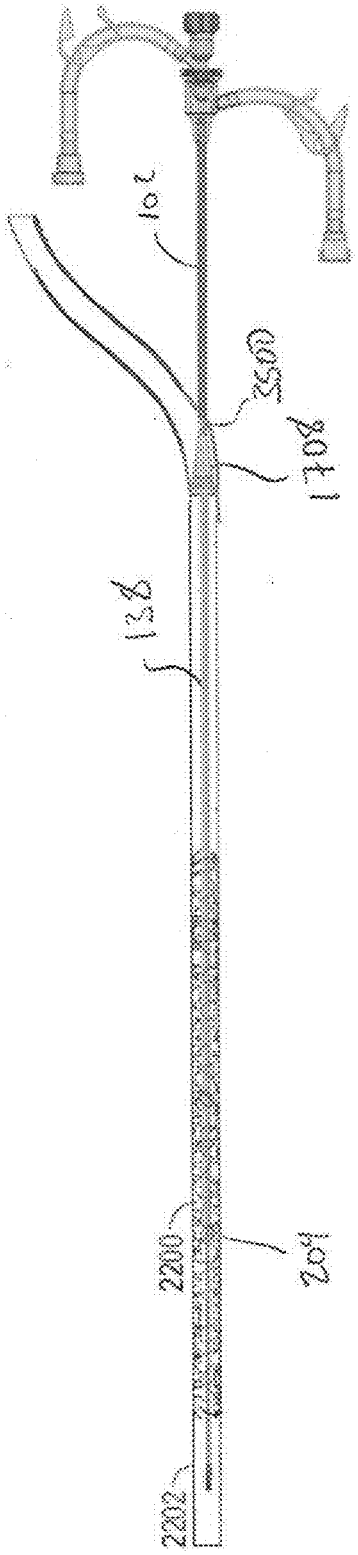

Figure 41-D

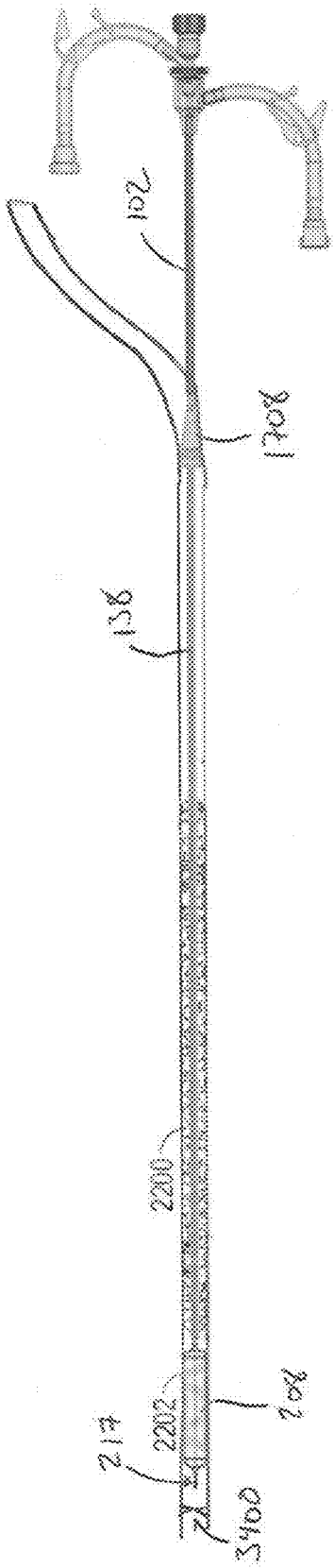

Figure 41-E

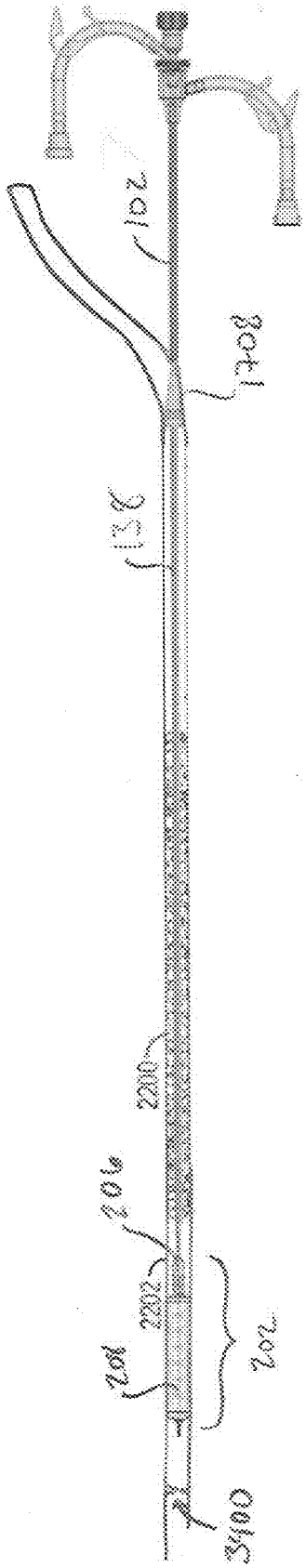

Figure 41-F

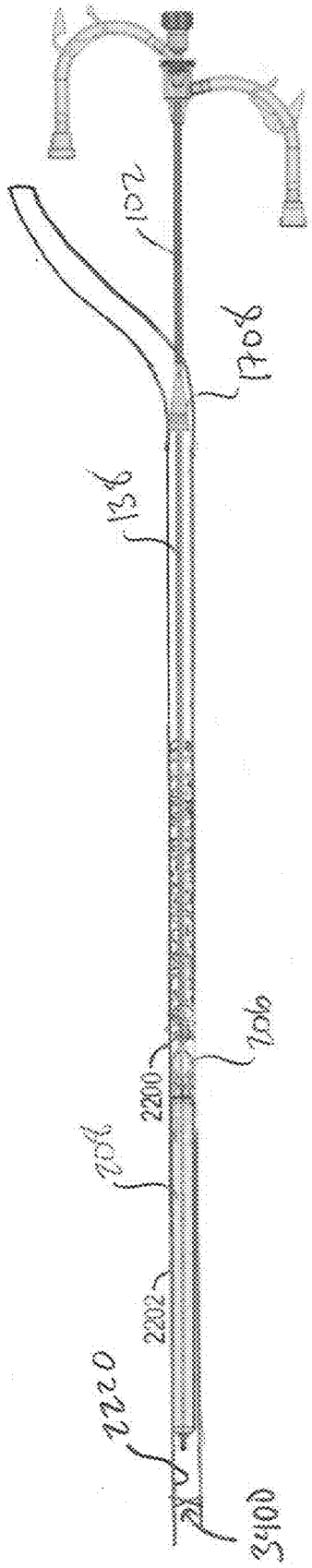

Figure 42-A

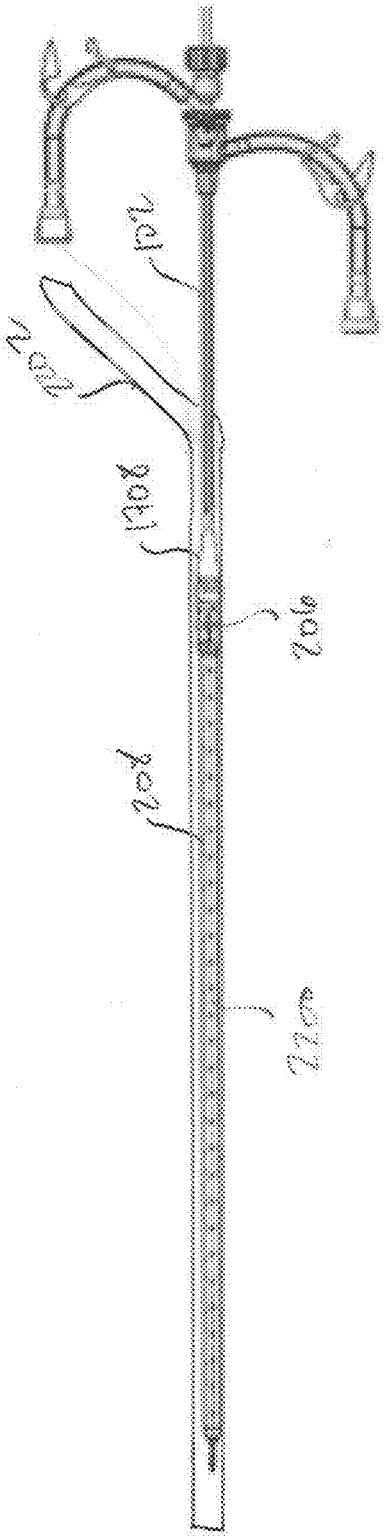

Figure 42-B

DEVICES AND METHODS FOR TREATING VASCULAR OCCLUSION

CROSS-REFERENCES TO RELATED APPLICATIONS

[0001] This application claims the benefit of U.S. Provisional Application No. 62/444,705, filed on Jan. 10, 2017, and entitled "INVERTED OR SELF-FEEDING DEVICES AND METHODS FOR TREATING VASCULAR OCCLUSION", the entirety of which is hereby incorporated by reference herein.

[0002] This application is related to U.S. Provisional Application No. 62/245,935, filed on Oct. 23, 2015, and entitled "INTRAVASCULAR TREATMENT OF VASCULAR OCCLUSION AND ASSOCIATED DEVICES, SYSTEMS AND METHODS"; U.S. patent application Ser. No. 15/268,296, filed on Sep. 16, 2016, and entitled "INTRAVASCULAR TREATMENT OF VASCULAR OCCLUSION AND ASSOCIATED DEVICES, SYSTEMS AND METHODS"; U.S. patent application Ser. No. 15/268,406, filed on Sep. 16, 2016, and entitled "INTRAVASCULAR TREATMENT OF VASCULAR OCCLUSION AND ASSOCIATED DEVICES, SYSTEMS AND METHODS"; and International Patent Application No. PCT/US2016/058536, filed on Oct. 24, 2016, and entitled "INTRAVASCULAR TREATMENT OF VASCULAR OCCLUSION AND ASSOCIATED DEVICES, SYSTEMS AND METHODS", the entirety of each of which is hereby incorporated by reference herein.

BACKGROUND OF THE INVENTION

[0003] Thrombosis is a term for a blood clot occurring inside a blood vessel, and a venous thrombus is a blood clot (thrombus) that forms within a vein. A common type of venous thrombosis is a deep vein thrombosis (DVT). DVT is the formation of a blood clot (thrombus) within a deep vein, predominantly in the legs. Nonspecific signs may include pain, swelling, redness, warmness, and engorged superficial veins.

[0004] If the thrombus breaks off (embolizes) and flows towards the lungs, it can become a life-threatening pulmonary embolism (PE), a blood clot in the lungs. In addition to the loss of life that can arise from PE, DVT can cause significant health issues such as post thrombotic syndrome, which can cause chronic swelling, pressure, pain, and ulcers due to valve and vessel damage. Further, DVT can result in significant health-care costs either directly or indirectly through the treatment of related complications and inability of patients to work.

[0005] Three processes are believed to result in venous thrombosis. These are a decreased blood flow rate (venous stasis), increased tendency to clot (hypercoagulability), and changes to the blood vessel wall. DVT formation typically begins inside the valves of the calf veins, where the blood is relatively oxygen deprived, which activates certain biochemical pathways. Several medical conditions increase the risk for DVT, including diabetes, cancer, trauma, and antiphospholipid syndrome. Other risk factors include older age, surgery, immobilization (as with bed rest, orthopedic casts, and sitting on long flights), combined oral contraceptives, pregnancy, the postnatal period, and genetic factors. The rate of DVT increases dramatically from childhood to old age and in adulthood, about 1 in 1,000 adults develops it annually.

[0006] While current devices and methods of prevention and/or treatment of DVT exist, there are a number of shortcomings that have yet to be resolved, such as high incidence of DVT re-occurrence, use of devices not designed to remove large clot volumes, and/or complicated treatments involving multiple treatment devices and/or pharmaceuticals. Accordingly, new devices, systems, and methods of treating thrombus, and particularly DVT are desired.

BRIEF SUMMARY OF THE INVENTION

[0007] Aspects of the present disclosure relate to systems and methods for thrombus extraction, and particularly for thrombus extraction from a peripheral vasculature. The thrombus extraction devices of the present invention are designed to remove large clot volumes, including mature and organized clots, with reduced needs for pharmaceuticals, such as thrombolytics. This reduces risk of bleeding, post-treatment recovery time, and reduces health care procedure costs. The thrombus extraction device may comprise a self-expanding coring portion connected to a braided net so as to effectively core and separate large volumes of thrombus from large vessels in, for example, the venous system or arterial system while capturing the separated thrombus in the braided net.

[0008] One aspect of the present disclosure relates to method for removal of thrombus from a blood vessel in a body of a patient. The method includes: providing a thrombus extraction device. The thrombus extraction device can include: a proximal self-expanding member formed of a fenestrated structure, and a substantially cylindrical portion formed of a net-like filament mesh structure having a proximal end coupled to a distal end of the fenestrated structure. The method includes: advancing a catheter constraining the thrombus extraction device through a vascular thrombus, deploying the thrombus extraction device by stacking a portion of the net-like filament mesh structure outside of the catheter by distally advancing the self-expanding member until the self-expanding member is beyond a distal end of the catheter; retracting the self-expanding member relative to the distal end of the net-like filament mesh structure to unstack the portion of the net-like filament mesh structure and to separate a portion of the thrombus from the vessel wall and to capture the portion of the thrombus within the net-like filament mesh structure; and withdrawing the thrombus extraction device from the body to remove thrombus from the patient.

[0009] In some embodiments, advancing the catheter through the vascular thrombus includes inserting the catheter into the blood vessel until a radiopaque distal tip of the catheter is past the thrombus portion. In some embodiments, stacking a portion of the net-like filament mesh structure includes: fixing a position of the distal end of the net-like filament mesh structure; and distally advancing the self-expanding member relative to the distal end of the net-like filament mesh structure.

[0010] In some embodiments, the position of the distal end of the net-like filament mesh structure is fixed proximal relative to one or several valves in the body of the patient. In some embodiments, the position of the distal end of the net-like filament mesh structure is fixed in the inferior vena cava, at one or several valves, and/or distal to one or several

valves. In some embodiments, the valve is located in the blood vessel containing the thrombus. In some embodiments, the valve is located in a second blood vessel, wherein the second blood vessel is connected to the blood vessel containing the thrombus.

[0011] In some embodiments, stacking a portion of the net-like filament mesh structure includes changing the braid angle of portion of the net-like filament mesh structure. In some embodiments, the braid angle of the portion of the net-like filament mesh structure is greater than 45° when stacked. In some embodiments, a diameter of the portion of the net-like filament mesh structure is greater than a diameter of the fenestrated structure. In some embodiments, the catheter is inserted into the blood vessel through a popliteal access site and the catheter is distally advanced from the popliteal access site. In some embodiments, the net-like filament mesh structure is interwoven on the fenestrated structure.

[0012] In some embodiments the method includes moving the fenestrated structure to full expansion. In some embodiments, moving the fenestrated structure to full expansion includes retracting a stop shaft relative to the fenestrated structure. In some embodiments, the stop shaft is retracted relative to the fenestrated structure via movement of a plunger from a first position to a second position. In some embodiments, the stop shaft is retracted relative to the fenestrated structure via movement of a shuttle from a first position to a second position. In some embodiments, the shuttle is moved from a first position to a second position via a force applied to the shuttle by a spring. In some embodiments, the stop shaft applies a constant pressure on the stop ring. In some embodiments, the stop shaft is replaced by a tether, or filament, to engage the fenestrated structure. In some embodiments, the stop shaft can comprise a filament such as a metal or polymeric filament, a monofilament, and/or a braided or woven strand. This tether or filament can be attached proximally to the catheter hub or handle, and can apply constant tension when the fenestrated structure is deployed.

[0013] In some embodiments, advancing the catheter through the vascular thrombus includes inserting the catheter into the blood vessel through a funnel catheter including: an elongate sheath; and a self-expanding funnel coupled to a distal end of the elongate sheath. In some embodiments, withdrawing the thrombus extraction device from the body to remove thrombus from the patient includes retracting the thrombus extraction device until at least a portion of the self-expanding member is contained within the self-expanding funnel. In some embodiments, the at least a portion of the self-expanding member contained within the self-expanding funnel includes an opening of the self-expanding member. In some embodiments, the method includes simultaneously proximally retracting the thrombus extraction device and the funnel catheter from the patient. In some embodiments, the opening of the thrombus extraction device is maintained within the self-expanding funnel during the simultaneous proximal retraction of the thrombus extraction device and the funnel catheter from the patient.

[0014] One aspect of the present disclosure relates to a thrombus extraction device for removal of a vascular thrombus from a blood vessel of a patient. The thrombus extraction device includes: a catheter having a proximal end and a distal end, an outer shaft defining a first lumen, a coring element shaft defining a second lumen, a stop shaft, and a tip shaft. In some embodiments, the stop shaft can define a third lumen, and in some embodiments, the tip shaft can define a tip lumen. In some embodiments, the coring element shaft is coaxial the first lumen and the tip shaft is coaxial the second lumen. The thrombus extraction device includes a self-expanding coring element formed of a fenestrated structure having an opening at a proximal end and configured to core and separate a portion of the vascular thrombus from the blood vessel. In some embodiments, the proximal end of the fenestrated structure is coupled to a distal end of the coring element shaft. The thrombus extraction device can include an expandable cylindrical portion formed of a filament mesh structure that can capture the vascular thrombus portion. In some embodiments, a proximal end of the mesh structure is coupled to a distal end of the fenestrated structure. In some embodiments, the stop shaft is displaceable independent of the tip shaft with respect to the coring element shaft and the proximal end the self-expanding coring element to move the self-expanding coring element to an expanded state.

[0015] In some embodiments, the filament mesh structure is interwoven on the fenestrated structure. In some embodiments the thrombus extraction device further includes an expansion mechanism that can maintain a desired radial force on a vessel wall with the self-expanding coring element. In some embodiments, the expansion mechanism can hold the fenestrated structure in full expansion. In some embodiments, the expansion mechanism includes a ring feature of the fenestrated structure and a stop feature that can engage with the ring feature when the fenestrated structure is in full expansion. In some embodiments, the stop feature can engage with the ring feature when the fenestrated structure is in full expansion and throughout the full travel and/or diameter range of the fenestrated structure. In some embodiments, the stop feature can be a tab on a stop shaft. In some embodiments, the tab can engage with the ring feature, and the stop shaft is coaxial with the first lumen.

[0016] In some embodiments, the thrombus extraction device can include a handle including a plunger that can control a relative position of the stop shaft with respect to the coring element shaft and that can selectively secure the relative position of the stop shaft with respect to the coring element shaft. In some embodiments, the thrombus extraction device further includes a handle having a spring connected to the stop shaft via a displaceable shuttle. In some embodiments, the shuttle is displaceable between a first position in which self-expanding coring element is collapsed and a second position in which self-expanding coring element is expanded. In some embodiments, the spring includes at least one of: a constant force spring; a tension spring; or a compression spring. In some embodiments, the spring can include any means for applying force to the stop including, for example, an elastomer, a pressure chamber, a hydraulic or pneumatic piston, or a torsion spring.

[0017] One aspect of the present disclosure relates to a funnel catheter for accessing and removing thrombus within a blood vessel of a patient. The funnel catheter includes: an elongate sheath having a proximal end, a distal end, and a lumen extending therebetween; a self-expanding funnel coupled to the distal end of the elongate sheath; and a dilator assembly that can be received within the lumen of the capture sheath. The dilator assembly includes: an obturator having an elongate shaft having proximal end, a distal end, and a capture sheath proximate to the distal end, which capture sheath can retain the self-expanding funnel in a

constrained configuration. In some embodiments, the dilator assembly can include a moveable shaft coaxially extending along a portion of the elongate shaft of the obturator between the proximal end of the obturator and the capture sheath. In some embodiments the moveable shaft includes a mating feature at a distal end of the moveable shaft, which mating feature can mate with the capture sheath.

[0018] In some embodiments, the funnel catheter includes a sealed hub located at the proximal end of the elongate sheath. In some embodiments, the sealed hub can include an aspiration port. In some embodiments, the self-expanding funnel has a diameter equal to or less than a diameter of the capture sheath when the self-expanding funnel is in the constrained configuration. In some embodiments, the moveable shaft has a diameter equal to the diameter of the capture sheath. In some embodiments, the moveable shaft is moveable between a loading position and a retracting position. In some embodiments, the moveable shaft includes a connecting feature that can connect the moveable shaft to the proximal end of the proximal end of the elongate shaft when the moveable shaft is in the loading position. In some embodiments, the mating feature of the moveable shaft can mate with the capture sheath when the moveable shaft is in the retracting position.

[0019] One aspect of the present disclosure relates to a method of accessing and removing thrombus from a venous vessel of a patient. The method includes percutaneously accessing a venous vessel of a patient through an access site with a funnel catheter. In some embodiments, the funnel catheter includes an elongate sheath defining a lumen, a self-expanding funnel coupled to a distal end of the elongate sheath, and a dilator assembly including: an elongate obturator extending through the lumen and retaining the self-expanding funnel in a constrained configuration within a capture sheath of the obturator; and a moveable shaft coaxially extending along a portion of the elongate obturator. In some embodiments, the access site can be a popliteal access site, a femoral access site, a mid-femoral access site, a tibial access site, a contralateral access site, or an internal jugular access site. The method includes: advancing a distal end of the funnel catheter to a position proximal of a thrombus; deploying the self-expanding funnel from the constrained configuration within the capture sheath to an expanded configuration free of the capture sheath; capturing thrombus in the self-expanding funnel; and aspirating the captured material through the lumen of the elongate sheath.

[0020] In some embodiments, deploying the self-expanding funnel includes: distally advancing the dilator assembly relative to the elongate sheath to unsheathe the self-expanding funnel from the constrained configuration to the expanded configuration; displacing the moveable shaft from a loading position to a retracting position; and removing the dilator assembly from the funnel catheter by proximally retracting the dilator assembly through the deployed self-expanding funnel and through the lumen of the elongate sheath. In some embodiments, deploying the self-expanding funnel can include: proximally retracting the elongate sheath over the dilator assembly to unsheathe the self-expanding funnel from the constrained configuration to the expanded configuration; displacing the moveable shaft from a loading position to a retracting position; and removing the dilator assembly from the funnel catheter by proximally retracting the dilator assembly through the deployed self-expanding funnel and through the lumen of the elongate sheath. In some embodiments, a mating feature of the moveable shaft mates with the capture sheath when the moveable shaft is in the retracting position

[0021] In some embodiments, the method includes inserting a catheter constraining a thrombus extraction device through the lumen of the elongate sheath so that a distal tip of the catheter is distally past the vascular thrombus portion, deploying the thrombus extraction device from the catheter, and proximally retracting the thrombus extraction device relative to the funnel catheter until an opening of the thrombus extraction device is within the self-expanding funnel. In some embodiments, the method includes percutaneously accessing a venous vessel of a patient with an introducer sheath through the access site. In some embodiments, percutaneously accessing the venous vessel of the patient with the funnel catheter through the access site includes inserting the funnel catheter into the venous vessel through the introducer sheath. In some embodiments, the method includes simultaneously proximally retracting the thrombus extraction device and the funnel catheter from the patient via the introducer sheath. In some embodiments, the opening of the thrombus extraction device is maintained within the self-expanding funnel during the simultaneous proximal retraction of the thrombus extraction device and the funnel catheter from the patient.

[0022] One aspect of the present disclosure relates to a method for removal of thrombus from a blood vessel in a body of a patient. The method includes providing a thrombus extraction device having a proximal self-expanding member formed of a unitary fenestrated structure, a substantially cylindrical portion formed of a net-like filament mesh structure having a non-everted portion coupled to a distal end of the unitary fenestrated structure and an everted portion extending proximally through the unitary fenestrated structure, and an inner shaft member coupled to a distal end of the net-like filament mesh structure. The method can include: advancing a catheter constraining the thrombus extraction device through a vascular thrombus; and deploying the thrombus extraction device by either advancing the unitary fenestrated structure beyond a distal end of the catheter or retracting the catheter relative to the unitary fenestrated structure thus exposing the unitary fenestrated structure and the non-everted portion of the net-like filament mesh structure distally past a portion of the thrombus and allowing expansion of the unitary fenestrated structure to engage a wall of the blood vessel. The method can include: distally advancing at least a part of the everted portion of the net-like filament mesh structure through the unitary fenestrated structure; retracting the thrombus extraction device to separate a portion of the thrombus from the vessel wall and to capture the portion of the thrombus within the net-like filament mesh structure; and withdrawing the thrombus extraction device from the body to remove thrombus from the patient.

[0023] In some embodiments, advancing the catheter through the vascular thrombus includes inserting the catheter into the blood vessel until a radiopaque distal tip of the catheter is past the thrombus portion. In some embodiments, distally advancing at least a part of the everted portion includes: fixing a position of a radiopaque tip of the inner shaft; and proximally retracting the unitary fenestrated structure. In some embodiments, the position of the radiopaque tip is fixed proximal relative to a valve of the blood vessel. In some embodiments, the catheter is inserted into the blood

vessel through a popliteal access site and the catheter is distally advanced from the popliteal access site.

[0024] In some embodiments, distally advancing at least a part of the everted portion of the net-like filament mesh structure through the unitary fenestrated structure increases a size of the non-everted portion of the net-like filament mesh structure relative to a size on the everted portion of the net-like filament mesh structure. In some embodiments, the at least a part of the everted portion of the net-like filament mesh structure is distally advanced through the unitary fenestrated structure until the portion of the thrombus is wholly contained in the net-like filament mesh structure.

[0025] In some embodiments, the net-like filament mesh structure everts on itself. In some embodiments, the method includes limiting proximal movement of the inner shaft with respect to the unitary fenestrated structure to prevent full eversion of the net-like filament mesh. In some embodiments, the net-like filament mesh structure is integrally formed on the unitary fenestrated structure. In some embodiments, the net-like filament mesh structure everts inside of and/or on the unitary fenestrated structure. In some embodiments, the method includes: retracting an intermediate shaft member relative to the catheter and the unitary fenestrated structure until a stop feature fixed on the intermediate shaft member engages a corresponding feature on the fenestrated structure; and locking the intermediate shaft member with respect to the unitary fenestrated structure for full expansion of the unitary fenestrated structure. In some embodiments, the method includes unlocking the intermediate shaft member with respect to the unitary fenestrated structure prior to withdrawing the thrombus extraction device from the body. In some embodiments, the thrombus extraction device as constrained within the catheter includes the non-everted portion and the everted portion extending proximally through the unitary fenestrated structure.

[0026] One aspect of the present disclosure relates to a thrombus extraction device for removal of a vascular thrombus from a blood vessel of a patient. The thrombus extraction device can include a catheter having a proximal end and a distal end, an outer shaft defining a first lumen, a first intermediate shaft defining a second lumen, and an inner shaft. In some embodiments, the first intermediate shaft is coaxial the first lumen and the inner shaft is coaxial the second lumen. The thrombus extraction device can include a self-expanding coring element formed of a unitary fenestrated structure having an opening at a proximal end that can core and separate a portion of the vascular thrombus from the blood vessel. In some embodiments, the proximal end of the fenestrated structure is coupled to a distal end of the first intermediate shaft. The thrombus extraction device can include an expandable cylindrical portion formed of a braided filament mesh structure having an everted portion. In some embodiments, the braided filament mesh structure can capture the vascular thrombus portion. In some embodiments, a proximal end of the mesh structure is coupled to a distal end of the fenestrated structure, and the everted portion of the mesh structure extends proximally through the opening of the unitary fenestrated structure. In some embodiments, a length of the everted portion relative to the non-everted portion of the braided filament mesh structure varies based on a position of the first intermediate shaft relative to the inner shaft of the catheter.

[0027] In some embodiments, the net-like filament mesh structure is integrally formed on the unitary fenestrated structure. In some embodiments, the net-like filament mesh structure everts on the unitary fenestrated structure. In some embodiments, the braided filament mesh structure includes a non-everted portion coupled to the distal end of the fenestrated structure. In some embodiments, the distal end of the braided mesh is coupled to the inner shaft. In some embodiments, the distal end of the braided mesh is fixedly coupled to the inner shaft. In some embodiments, the distal end of the braided mesh is slidably coupled to the inner shaft.

[0028] In some embodiments, the thrombus extraction device can include an expansion mechanism that can maintain a desired radial force on a vessel wall with the unitary fenestrated structure. In some embodiments, the expansion mechanism can hold the unitary fenestrated structure in full expansion. In some embodiments, the expansion mechanism includes a ring feature of the unitary fenestrated structure and a stop feature that can engage with the ring feature when the unitary fenestrated structure is in full expansion. In some embodiments, the stop feature can be a tab on a second intermediate shaft. In some embodiments, the tab can engage with the ring feature, and the second intermediate shaft can be coaxial with the first lumen. In some embodiments, the stop feature can be a tension spring dynamically coupled with the ring feature.

[0029] In some embodiments, the net-like filament mesh structure everts on itself. In some embodiments, the thrombus extraction device can include an eversion stop that can limit proximal movement of the inner shaft with respect to the unitary fenestrated structure to prevent full eversion of the net-like filament mesh structure. In some embodiments, the net-like filament mesh structure can include a plurality of filaments and can have a first pore size at a proximal portion and a second pore size at a distal portion. In some embodiments, the first pore size is different from the second pore size. In some embodiments, the at least some of the plurality of filaments are longitudinally overlaid in the distal portion. In some embodiments, the self-expanding coring element and the expandable cylindrical portion are contained within the outer shaft of the catheter such that the everted portion of the mesh structure extends proximally through the opening of the unitary fenestrated structure.

[0030] One aspect of the present disclosure relates to a method for removal of thrombus from a blood vessel in a body of a patient. The method includes advancing a catheter constraining the thrombus extraction device through a vascular thrombus. In some embodiments, the thrombus extraction device includes a proximal self-expanding member formed of a fenestrated structure, and a substantially cylindrical portion formed of a net-like filament mesh structure having a proximal end coupled to a distal end of the fenestrated structure. The method includes: deploying the thrombus extraction device by distally advancing the self-expanding member with respect to the catheter until the self-expanding member is beyond a distal end of the catheter; retracting the self-expanding member relative to the distal end of the net-like filament mesh structure to increase a distal length of the net-like filament mesh structure and to separate a portion of the thrombus from the vessel wall and to capture the portion of the thrombus within the net-like filament mesh structure; and withdrawing the thrombus extraction device from the body to remove thrombus from the patient.

[0031] Further areas of applicability of the present disclosure will become apparent from the detailed description provided hereinafter. It should be understood that the detailed description and specific examples, while indicating various embodiments, are intended for purposes of illustration only and are not intended to necessarily limit the scope of the disclosure.

BRIEF DESCRIPTION OF THE DRAWINGS

[0032] FIG. **1** is a perspective view of one embodiment of a thrombectomy system for removal of a thrombus from a blood vessel of a patient.

[0033] FIG. **2** is a side view of one embodiment of the thrombus extraction catheter having a thrombus extraction device is a deployed configuration.

[0034] FIG. **3** is a side view of one embodiment of the thrombus extraction catheter having a thrombus extraction device is a deployed configuration at full expansion.

[0035] FIG. **4** is a side view of one embodiment of a self-expanding coring element.

[0036] FIG. **5** is a top view of one embodiment of a self-expanding coring element.

[0037] FIG. **6** is a front view of one embodiment of a self-expanding coring element.

[0038] FIG. **7** is a side view of one embodiment of the thrombus extraction device in a full expansion configuration.

[0039] FIG. **8** is a view of one embodiment of a ball shaped thrombus captured in a thrombus extraction device.

[0040] FIG. **9** is a side view of one embodiment of the braided filament mesh structure having multiple pore sizes.

[0041] FIG. **10** is a side view of one embodiment of the thrombus extraction device including a plurality of circumferential grooves.

[0042] FIG. **11** is a schematic illustration of one embodiment of a braiding and/or weaving pattern for forming the cylindrical portion and/or the braided filament mesh structure onto the self-expanding coring element.

[0043] FIG. **12** is a section view of an embodiment of the handle with a plunger in a first position.

[0044] FIG. **13** is a section view of an embodiment of the handle with a plunger in a second position.

[0045] FIG. **14** is a close-up, section view of a portion of the handle with a plunger in a second position.

[0046] FIG. **15** is a side view of one embodiment of an obturator having a constant dimension of an elongate shaft.

[0047] FIG. **16** is a side view of one embodiment of an obturator having a variable dimension of an elongate shaft.

[0048] FIG. **17** is a detailed section view of one embodiment of the capture sheath of the obturator.

[0049] FIG. **18** is a side view of one embodiment of an introducer sheath in an undeployed configuration.

[0050] FIG. **19** is a side view of one embodiment of an introducer sheath in a partially deployed configuration.

[0051] FIG. **20** is a side view of one embodiment of an introducer sheath in a deployed configuration.

[0052] FIG. **21** is a side view of one embodiment of an introducer sheath comprising an inflatable balloon.

[0053] FIG. **22** is a schematic depiction of one embodiment of accessing the blood vessel via a popliteal access site.

[0054] FIGS. **23**-A through **23**-H are views depicting one embodiment of a process for fully expanding the thrombus extraction device in a blood vessel.

[0055] FIGS. **24**-A and **24**-B are views depicting alternative steps in the process for fully expanding the thrombus extraction device in a blood vessel.

[0056] FIGS. **25**-A through **25**-H are views depicting one embodiment of a process for removal of thrombus with an expanded thrombus extraction device.

[0057] FIG. **26** is a schematic depiction of one embodiment of accessing the blood vessel via an internal jugular access site.

[0058] FIG. **27** is a schematic depiction of one embodiment of accessing the blood vessel via a popliteal access site with an extension sheath **2300**.

[0059] FIG. **28** is a schematic depiction of one embodiment of accessing the blood vessel via a popliteal access site and a femoral access site.

[0060] FIG. **29** is a side view of an embodiment of the thrombus extraction device with an everted portion.

[0061] FIG. **30** is a side, section view of an embodiment of the thrombus extraction device with an everted portion and an expansion mechanism.

[0062] FIG. **31** is a side, section view of an embodiment of the thrombus extraction device with an everted portion and a coupling.

[0063] FIG. **32** is a side view of one embodiment of the thrombus extraction device with an everted portion having a first length.

[0064] FIG. **33** is a side view of one embodiment of the thrombus extraction device with an everted portion having a second length.

[0065] FIGS. **34**-A to **34**-D are views depicting one embodiment of a process for affecting the relative lengths of the everted portion and the non-everted portion of a thrombus extraction device in a blood vessel.

[0066] FIG. **35** is a schematic illustration of one embodiment of a funnel catheter.

[0067] FIG. **36** is schematic illustration of one embodiment of a dilator assembly with a moveable sheath in a loading position.

[0068] FIG. **37** is schematic illustration of one embodiment of a dilator assembly with a moveable sheath in a retracting position.

[0069] FIGS. **38**-A to **38**-D are views depicting one embodiment of steps in a process for deploying the self-expanding funnel of a funnel catheter.

[0070] FIG. **39** is a top view of one embodiment of a stackable thrombus extraction device.

[0071] FIG. **40** is a section view of one embodiment of a handle and a shuttle of the thrombectomy system.

[0072] FIGS. **41**-A to **41**-F are views depicting one embodiment of steps in a process for expanding a stackable thrombus extraction device in a blood vessel.

[0073] FIGS. **42**-A and **42**-B are views depicting one embodiment of steps in a process for retracting stackable thrombus extraction device through thrombus in a blood vessel.

DETAILED DESCRIPTION OF THE INVENTION

[0074] The present disclosure relates to a thrombectomy system for removal of a vascular thrombus from a blood vessel of a patient. The thrombectomy system can remove thrombus from a blood vessel, and particularly from a venous vessel of a patient via the coring of the thrombus and/or the separating of the thrombus from the walls of the

blood vessel that can occur when the thrombectomy system is retracted through the vascular thrombus. Thrombus that is cored and/or separated from the walls of the blood vessel can be captured within the thrombectomy system and removed from the patient.

[0075] The thrombectomy system can include a thrombus extraction catheter including a Thrombus Extraction Device ("TED"). The TED can include a proximal self-expanding coring element that can be a stent portion and/or that can be formed of a fenestrated structure such as, for example, a unitary fenestrated structure. In some embodiments, the self-expanding coring element can be a semi-rigid structure that can be, for example, a semi-rigid collapsible structure. The TED can include a distal expandable cylindrical portion formed of a braided filament mesh structure that can, in some embodiments, include an everted portion and a non-everted portion. The braided filament mesh structure can be formed, looped, and/or interwoven on the coring element to thereby form a unitary TED, also referred to herein as an interwoven TED. This forming of the braided filament mesh structure directly on the coring element can eliminate problems, such as: inconsistent material properties, decreased flexibility, decreased strength, and/or quality control issues, arising from connecting the braided filament mesh structure to the coring element via, for example, welding or adhesive.

[0076] Thrombectomy systems including a TED having an everted portion and a non-everted portion can allow use of the thrombectomy system in blood vessels having smaller diameters than would be otherwise possible and can decrease the potential damage inflicted to valves located in the blood vessel. Specifically, such thrombus extraction devices can limit the length of the blood vessel used in deploying the TED, and particularly limit the length of the blood vessel beyond the thrombus used in deploying the thrombus extraction device allowing the TED to extract thrombus more distally located. Thus, the number of valves through which the thrombus extraction device extends can be reduced and potential valve damage can be prevented. Additionally, due to the everting nature of the TED, the device can be operated in such a way that is either in the same direction as the venous blood flow or retrograde the venous blood flow. In some embodiments, operation in the same direction as venous blood flow can further reduce the potential damage caused to the venous valves by the TED.

[0077] The expansion of the TED can be controlled by the relative movement of portions of the thrombus extraction catheter. For example, a proximal end of the TED, and specifically a proximal end of the self-expanding coring element can be connected to an intermediate shaft that is slidable within an outer shaft of the thrombus extraction catheter. A distal end of the TED, and specifically a distal end of the expandable cylindrical portion can be either fixedly or slidably connected to an inner shaft that is slidable within the intermediate shaft of the thrombus extraction catheter. As the inner shaft and the intermediate shaft are slidable with respect to the outer shaft, the TED can be withdrawn into the outer shaft to constrain the TED to an undeployed configuration, also referred to herein as a constrained configuration. Similarly, the TED can be deployed from the outer shaft by the relative movement of the intermediate shaft with respect to the outer shaft. In some embodiments, after the TED has been deployed from the outer shaft, the inner shaft and the intermediate shaft can be moved with respect to each other to either expand or contract the expandable cylindrical portion of the TED and to bring the self-expanding coring element to full expansion. In some embodiments, after the TED has been deployed from the outer shaft, the inner shaft and the intermediate shaft can be moved with respect to each other to change the length of the everted portion and the non-everted portion.

[0078] In some embodiments, self-expanding coring element can be controlled independent of the expandable cylindrical portion, and/or the expandable cylindrical portion can be controlled independent of the self-expanding coring element. In some embodiments, for example, the TED can be self-expanding coring element can be relatively distally advanced towards the expandable cylindrical portion. In such an embodiment, the expandable cylindrical portion can compress, also referred to herein as "stack" which can, in some embodiments, result in a decreased length of the expandable cylindrical portion and, in some embodiments, can result in an increased diameter of at least a portion of the expandable cylindrical portion. In some embodiments, the ability to control the self-expanding coring element independent of the expandable cylindrical portion, and the ability to stack the expandable cylindrical portion can allow the use of the thrombectomy system, and can specifically allow the capturing of large and/or lengthy thrombus without having the TED, and specifically the expandable cylindrical portion far beyond the location of the thrombus. In some embodiments, this limited extension of the expandable cylindrical portion beyond the location of the thrombus can ease the use of the thrombectomy system by limiting the extension of the thrombectomy system beyond the thrombus. In some embodiments, for example, this limitation of the extension of the thrombectomy system beyond the thrombus can mitigate risk of damage to tissues, blood vessels, and/or organs beyond the thrombus from the thrombectomy system. Specifically, such thrombus extraction devices can limit the length of the blood vessel used in deploying the TED, and particularly limit the length of the blood vessel beyond the thrombus used in deploying the thrombus extraction device. Thus, risk of damage to blood vessels, tissues, and/or organs beyond the thrombus can be minimized via stacking of the TED.

[0079] The thrombectomy system can include an introducer sheath that can be sized to slidably receive the outer sheath of the thrombus extraction catheter. In some embodiments, the introducer sheath can include a sealed aperture at a proximal end of the introducer sheath and a self-expanding funnel. In some embodiments, the introducer sheath can include a sealed aperture at a proximal end and an open distal end, and the thrombectomy system can include a funnel catheter having a self-expanding funnel. The self-expanding funnel can be located at a distal end of the introducer sheath and can be selectably held in a constrained position by a capture sheath. In some embodiments, the self-expanding funnel can be slidably contained within the introducer sheath and can specifically be slidable with respect to the distal end of the introducer sheath. In some embodiments, the self-expanding funnel can be distally slid from a constrained configuration within the introducer sheath to a deployed configuration at which the self-expanding funnel extends from the distal end of the capture sheath.

[0080] The self-expanding funnel can be sized to engage with the self-expanding coring element when the TED is retracted towards the funnel. As the TED is retracted into the funnel, the funnel compresses the TED, and specifically the

coring element, and guides the TED, and specifically the coring element into a lumen defined by the introducer sheath. The TED can be retracted until it is completely contained within the introducer sheath, and then the TED and the thrombus captured in the TED can be removed from the patient via the sealed aperture. Alternatively, in some embodiments, the TED can be retracted until all or a portion of the coring element is contained within the funnel attached to the funnel catheter, and the funnel catheter and the TED can then be simultaneously retracted, in some embodiments, through the introducer sheath.

[0081] The thrombectomy system can access the blood vessel containing the thrombus via a plurality of access sites. These can include, for example, an internal jugular (U) access site, a femoral access site, a popliteal access site, or other venous or arterial access sites. The thrombectomy system can be used to extract thrombus and/or embolus from a variety of venous and/or arterial vessels, which can be peripheral vessels, including any vessel, including, by way of non-limiting example, a venous vessel, having a diameter of at least 3 millimeters (mm). The thrombectomy system can be inserted through an access point into a circulatory system of a patient and can be advanced to a position proximate to the thrombus. The TED can then be advanced through the thrombus, and, after being expanded distally of the thrombus, the TED can be retracted through the thrombus, thereby capturing all or portions of the thrombus.

[0082] With reference now to FIG. **1**, one embodiment of a thrombectomy system **100**, also referred to herein as a thrombus extraction system **100**, is shown. The thrombectomy system **100** can be used to access a portion of a blood vessel such as a venous vessel containing thrombus and the thrombectomy system **100** can be used to remove all or portions of that thrombus from the blood vessel. The thrombectomy system **100** can include an introducer sheath **102** and a thrombus extraction catheter **104**.

[0083] The introducer sheath **102** comprises an elongate member **106**, also referred to herein as an elongate sheath **106**, having a proximal end **108** and a distal end **110**. The elongate member **106** can be elastic and/or flexible. The elongate member **106** can comprise any desired length and any desired diameter. In some embodiments, the elongate sheath **106** can have an outer diameter of at least 10 French, at least 12 French, at least 14 French, at least 18 French, at least 20 French, at least 22 French, between 14 French and 24 French, between 15 French and 21 French, between 16 French and 22 French, and/or any other or intermediate size.

[0084] The elongate member **106** can comprise a radiopaque marker that can be, for example, part of the distal end **110** of the elongate member **106**. The elongate member **106** defines a lumen extending between the proximal end **108** and the distal end **110**. The lumen **1701** (shown in FIG. **17**) of the elongate member **106** can be sized to slidably receive the thrombus extraction catheter **104**. In some embodiments, the lumen **1701** of the elongate member **106** can have an internal diameter of at least 2 French, at least 10 French, at least 14 French, at least 18 French, at least 20 French, at least 22 French, between 11 French and 12 French, between 10 French and 22 French, between 14 French and 21 French, between 16 French and 20 French, and/or any other or intermediate size. The lumen **1701** can terminate at a sealed aperture **112**, also referred to herein as a sealed hub **112**, located at the proximal end **108** of the elongate member **106**. In some embodiments, the sealed aperture **112** can be self-sealing and/or can comprise a self-sealing seal.

[0085] The introducer sheath **102** can further include an aspiration port **114** that can be at the proximal end **108** of the elongate member **106** and/or connected to the proximal end **108** of the elongate member **106** via, for example, a connecting tube **116**. In some embodiments, the aspiration port **114** can be a part of, and/or connected to the sealed hub **112**. In some embodiments, the aspiration port **114** can be selectively fluidly connected to the lumen **1701** via, for example, a valve **118**, also referred to herein as an aspiration valve **118**, which valve **118** can be a tubing clamp that can be located at a position along the connecting tube **116** between the lumen **1701** and the aspiration port **114**.

[0086] The introducer sheath **102** can further hold an obturator **120**, also referred to herein as a dilator **120**. The obturator **120** can be configured to hold a self-expanding funnel that can be attached to the distal end **110** of the elongate member **106** in a constrained configuration, and to release the self-expanding funnel from that constrained configuration. The obturator **120** can comprise a proximal end **122**, a distal end **124**, and an elongate shaft **126** extending therebetween. In some embodiments, the elongate shaft **126** can have a length that is greater than a length of the elongate member **106** of the introducer sheath **102**. The obturator **120** can further define a lumen extending through the obturator **120**, which lumen can receive a guidewire. In some embodiments, the guidewire can comprise any desired dimensions and can, in some embodiments, have a diameter of approximately 0.035 inches. The obturator **120** can be sized and shaped so as to be able to slidably move through the lumen of the elongate member **106**.

[0087] The thrombectomy system **100** can include the thrombus extraction catheter **104**. The thrombus extraction catheter **104** can have a proximal end **130** and a distal end **132**. A handle **134**, also referred to herein as a deployment handle **134**, can be located at the proximal end **130** of the thrombus extraction catheter **104** and can connect to a catheter portion **136**, also referred to herein as the catheter **136**.

[0088] The catheter **136** can include an outer shaft **138**, an intermediate shaft **140**, also referred to herein as a first intermediate shaft **140** or as a coring element shaft **140**, a second intermediate shaft, also referred to herein as a stop shaft, a third intermediate shaft, and an inner shaft, also referred to herein as the tip shaft. The outer shaft **138** can comprise a variety of lengths and sizes. In some embodiments, the outer shaft **138** can be sized to slidably fit within the introducer sheath **102**. In some embodiments, the outer shaft **138** can have a size of at least 8 French, at least 10 French, at least 11 French, at least 12 French, at least 14 French, at least 16 French, between 8 French and 14 French, between 11 French and 12 French, and/or any other or intermediate size.

[0089] Each of the outer shaft **138**, the one or several intermediate shafts **140**, **3000**, **3002**, and the inner shaft can define a lumen that can be a central, axial lumen. In some embodiments, the intermediate shaft **140** can be sized and/or shaped to slidably fit within the lumen **802** (shown in FIG. **8**) of the outer shaft **138** such that the intermediate shaft **140** and the outer shaft **138** are coaxial. Similarly, in some embodiments, the inner shaft can be sized and/or shaped to slidably fit within the lumen **804** (shown in FIG. **8**) of the

intermediate shaft **140** such that the inner shaft and the intermediate shaft **140** are coaxial. In this configuration, each of the outer shaft **138**, the intermediate shaft **140**, and the inner shaft can be displaced relative to the others of the outer shaft **138**, the intermediate shaft **140**, and the inner shaft.

[0090] In some embodiments, the first intermediate shaft **140** can be sized and/or shaped to slidably fit within the lumen **802** (shown in FIG. **8**) of the outer shaft **138** such that the intermediate shaft **140** and the outer shaft **138** are coaxial, the second intermediate shaft **3000**, also referred to herein as the stop shaft **3000**, can be sized and/or shaped to slidably fit within the first intermediate shaft **140**, and/or the third intermediate shaft **3002** can sized and/or shaped to slidably fit within the second intermediate shaft **3000**. Similarly, in some embodiments, the inner shaft can be sized and/or shaped to slidably fit within the second intermediate shaft **3000** or the third intermediate shaft **3002** such that the inner shaft and the intermediate shaft **140** are coaxial. In this configuration, each of the outer shaft **138**, the intermediate shafts **140**, **3000**, **3002**, and the inner shaft can be displaced relative to the others of the outer shaft **138**, the intermediate shafts **140**, **3000**, **3002**, and the inner shaft.

[0091] In some embodiments, each of the outer shaft **138**, the intermediate shafts **140**, **3000**, **3002**, and the inner shaft can have the same length, and in some embodiments some or all of the outer shaft **138**, the intermediate shafts **140**, **3000**, **3002**, and the inner shaft can have different lengths. In some embodiments, for example, one or more of the intermediate shafts **140**, **3000**, **3002** can be relatively longer than the outer shaft **138**, and in some embodiments, the inner shaft can be relatively longer than the intermediate shaft **140**.

[0092] The thrombus extraction catheter **104** can further include a thrombus extraction device (TED). In some embodiments, the TED can connect to the intermediate shaft **140** and the inner shaft, and can be contained in an undeployed configuration within the lumen **802** of the outer shaft **138**, and in some embodiments, the TED can connect to the first intermediate shaft **140** and one of the second intermediate shaft **3000**, the third intermediate shaft **3002**, and the inner shaft. In some embodiments, the relative positioning of the outer shaft **138**, one or more of the intermediate shafts **140**, **3000**, **3002**, and/or the inner shaft can result in the TED being in an undeployed configuration, a deployed configuration, a partial expansion configuration, and/or a full expansion configuration. In some embodiments, the TED in the deployed configuration can be in either the full expansion configuration or in the partial expansion configuration.

[0093] The handle **134** can include a distal end **142**, also referred to herein as a lock end **142**, and a proximal end **144**, also referred to herein as a plunger end **144**. In some embodiments, the intermediate shaft **140** connects to, and distally extends towards the distal end **132** of the thrombus extraction catheter **104** from the distal end **142** of the handle **134**. In some embodiments, in which the TED includes an everted or partially everted braided filament mesh structure, a handle is not used to deploy or actuate the braided filament mesh structure. In some such embodiments, the force of the clot against the braided filament mesh structure expands and/or deploys the braided filament mesh structure when the TED is retracted through the clot.

[0094] As seen in FIG. **1**, the distal end **142** of the handle **134** can include a lock feature **146** such as, for example, a spinlock. The lock feature **146** can selectively engage and/or lockingly engage with a mating feature **148** located on a proximal end **150** of the outer sheath **138**. In some embodiments, for example, the outer sheath **138** can proximally slide over the intermediate sheath **140** until the lock feature **146** engages with the mating feature **148** to thereby secure the position of the outer sheath **138** with respect to the intermediate sheath **140**. In embodiments in which the intermediate shaft **146** is relatively longer than the outer shaft **138**, a portion of the intermediate shaft **146** distally extends from a distal end **152** of the outer shaft **138** when the outer shaft **138** is lockingly engaged with the lock feature **146**.

[0095] The handle **134** can include a plunger **154** that can be movable between a first, non-extended position and a second, extended position. In some embodiments, the plunger **154** can be moved from the first position to the second position by proximally displacing the plunger **154** relative to the handle **134**. The plunger **154** can be lockable in one or both of the first position and/or the second position. In some embodiments, the plunger **154** can be connected to one or several features of the TED that can lock the TED in a full expansion configuration and/or move the TED to a full expansion configuration.

[0096] The plunger **154** can connect to one of: the second intermediate shaft **3000**; the third intermediate shaft **3002**; and the inner shaft such that the connected one of: the second intermediate shaft **3000**; the third intermediate shaft **3002**; and the inner shaft is displaceable relative to the handle **134**, the outer shaft **138**, and/or the intermediate shaft **140** via the movement of the plunger **154** from the first position to the second position. In some embodiments in which the inner shaft is relatively longer than the intermediate shaft **140** and/or the outer shaft **138**, the inner shaft can have a length such that the inner shaft distally extends past a distal end of the intermediate shaft **140** regardless of whether the plunger **154** is in the first position or the second position.

[0097] The thrombus extraction catheter **104** can further include a first flush port **155** connecting to the outer shaft **138** and a second flush port **156** connecting to the handle **134**. In some embodiments, the first flush port **155** can be fluidly connected to the lumen **802** of the outer shaft **138** so as to allow the flushing of the lumen **802** of the outer shaft **138** via the first flush port **155**. In some embodiments, the second flush port **156** can be fluidly connected to an internal portion of the handle **134** and thereby the lumen of the intermediate shaft **140** so as to allow the flushing of the lumen of the intermediate shaft **140**.

[0098] The thrombectomy system **100** can further include a loading funnel **158**. The loading funnel **158** can include a funnel portion **160** and a shaft portion **162**. The funnel portion **160** can define a funnel shaped interior volume connecting to a lumen of the shaft portion **162**. The funnel shaped interior volume can be sized and shaped to receive the self-expanding funnel and to move the self-expanding funnel to a constrained position as the self-expanding funnel is advanced through the funnel portion **160**. The funnel shaped interior volume and the lumen can be sized to allow the distal end **124** of the obturator **120** to pass completely through the loading funnel **158**.

[0099] In some embodiments, the loading funnel **158** can be configured to facilitate loading of the self-expanding funnel into the obturator **102**. In some embodiments, the

self-expanding funnel can be loaded by inserting the obturator **120** through the elongate member **106** such that the obturator **120** extends from the distal end **110** of the elongate member **106** and beyond the self-expanding funnel. The loading funnel **158** can then be proximally slid over the obturator **120** and the self-expanding funnel until the self-expanding funnel is fully encapsulated by the loading funnel **158** and/or until the self-expanding funnel is in the constrained configuration. The obturator **120** can then be retracted to thereby load and/or capture the self-expanding funnel within a portion of the obturator **120**, and the loading funnel **158** can then be removed from the obturator **120** and the elongate member **106**.

[0100] The thrombectomy system **100** can further include a sealed hub dilator **170**, also referred to herein as a seal dilator **170** and/or an aperture dilator **170**. A section view of seal dilator **170** is shown in FIG. **1**. The seal dilator **170** can be sized and shaped for insertion into the sealed aperture **112** prior to removal of thrombus through the sealed aperture **112**. By this insertion into the sealed aperture **112**, the seal dilator **170** can dilate the sealed aperture **112**. In some embodiments, this dilation of the sealed aperture **112** can prevent the application of force from the sealed aperture **112** onto the thrombus during removal of the thrombus through the sealed aperture **112**. In some embodiments, the seal dilator **170** can comprise an insertion portion **172** configured to facilitate the insertion of the seal dilator **170** into the sealed aperture **112**. The seal dilator **170** can further comprise a body portion **174** that can, alone, or together with the insertion portion **172** define an extraction lumen **176** through which the thrombus can be removed from the lumen **1701** of the elongate member **106**. In some embodiments, the internal diameter of the extraction lumen **176** can be larger than a diameter of the sealed aperture **112** in a sealed configuration

[0101] With reference now to FIG. **2**, a side view of one embodiment of the thrombus extraction catheter **104** is shown. The thrombus extraction catheter **104** includes the handle **134**, the outer shaft **138**, the intermediate shaft **140**, the inner shaft **200**, and the thrombus extraction device **202**, also referred to herein as the TED **202**. As shown in FIG. **2**, the outer shaft **138** is proximally displaced relative to the handle **134** such that the mating feature **148** of the outer shaft **138** is contacting the locking feature **146** of the handle **134**. Due to this positioning of the outer shaft **138** with respect to the handle **134**, each of the intermediate shaft **140**, the inner shaft **200**, and the TED **202** distally extend beyond a distal end **204** of the outer shaft **138**. The thrombus extraction device **202** shown in FIG. **2** is in a deployed and partial expansion configuration.

[0102] The thrombus extraction device **202** can include a self-expanding coring element **206**, and an expandable cylindrical portion **208**. The self-expanding coring element **206** can be relatively more proximally located on the thrombus extraction catheter **104** than the expandable cylindrical portion **208**. The self-expanding coring element **206** can include a proximal end **210** connecting to a distal end **212** of the intermediate shaft **140** and a distal end **214** connecting to a proximal end **216** of the expandable cylindrical portion **208**. The distal end **217** of the expandable cylindrical portion **208** can connect to a distal end **218** of the inner shaft **200**.

[0103] In some embodiments, the distal end **218** of the inner shaft **200** can further include a tip **220** such as an atraumatic tip and/or a radiopaque marker **222**. In some embodiments, the tip **220** can include the radiopaque marker **222**. Further radiopaque markers can be located on, for example, the outer shaft **138** and specifically the distal end **204** of the outer shaft **138** and/or the distal end **212** of the intermediate shaft **140**. In some embodiments, one or both of the distal end **204** of the outer shaft **138** and the distal end **212** of the intermediate shaft **140** can each comprise a radiopaque marker. In some embodiments, the atraumatic tip **220** can define a channel configured to allow the guidewire to pass through the atraumatic tip **220**.

[0104] With reference now to FIG. **3**, a side view of one embodiment of the thrombus extraction catheter **104** with the thrombus extraction device **202** in the deployed and full expansion configuration is shown. In contrast to the embodiment of FIG. **2**, the plunger **154** is in the second position, proximally retracted from the handle **134**, and the inner shaft **200** is thereby proximally retracted relative to the intermediate shaft **140** to thereby fully expand the expandable cylindrical portion **208** and to secure the expandable cylindrical portion **208** and the self-expanding coring element **206** in full expansion configurations and/or in full expansion.

[0105] The thrombus extraction catheter **104** can comprise one or several features configured to secure the thrombus extraction device **202**, and specifically the self-expanding coring element **206** and/or the expandable cylindrical portion **208** in a fully expanded position and/or in full expansion. As used herein, full expansion describes a condition in which the thrombus extraction device **202** is in a state of continual bias to or toward expansion by one or several forces in addition to the self-expanding forces arising from the thrombus extraction device **202**. In some embodiments, full expansion occurs when the thrombus extraction device **202** is deployed and when the plunger **154** is in the second position, or when the thrombus extraction device **202** is deployed and biased towards expansion via a spring connected either directly or indirectly to the thrombus extraction device **202**. In such an embodiment in which the thrombus extraction device **202** is biased towards expansion via a spring, forces less than a minimal radial compressive force do not change the diameter of the thrombus extraction device **202**. In some embodiments, for example, the thrombus extraction device **202** at full expansion maintains at least a desired radial force on a blood vessel when the thrombus extraction device **202** is drawn through that blood vessel. In some embodiments, one or several dimensions of the thrombus extraction device **202** can vary when the thrombus extraction device **202** is in full expansion. In some embodiments, this can facilitate apposition of the walls of the blood vessel by the thrombus extraction device **202** and/or a desired force or force level applied to the walls of the blood vessel by the thrombus extraction device **202**.

[0106] In some embodiments, the plunger **154** can be locked in the second position by, for example, rotating the plunger **154** with respect to the handle **134** to thereby engage one or several locking features on the plunger **154** and in the handle **134**. In some embodiments, by locking the plunger **154** in the second position, the thrombus extraction device **202**, and specifically the self-expanding coring element **206** and/or the expandable cylindrical portion **208** can be secured in the full expansion by securing the position of the inner shaft **200** with respect to the intermediate shaft **140**. In some embodiments, securing the position of the inner shaft **200** with respect to the intermediate shaft **140** can include

locking the inner shaft **200** with respect to the intermediate shaft **140** and/or coupling the position of the inner shaft **200** with respect to the position of the intermediate shaft **140**. In some embodiments, this locking and/or coupling can be static, referred to herein as statically locked and/or statically coupled, in that the position of the inner shaft **200** is fixed with respect to the position of the intermediate shaft **140**, and in some embodiments, this locking and/or coupling can be dynamic, referred to herein as dynamically locked and/or dynamically coupled, in that the position of the inner shaft **200** with respect to the intermediate shaft **140** is limited. In some embodiments, and as will be discussed at greater length below, the inner shaft **200** can be dynamically locked to the plunger **154** via a compliance spring **1214**, which can be, for example, a tension spring or a compression spring, which allows some movement of the inner shaft **200** with respect to the intermediate shaft **140** when the plunger is locked in the second position. Thus, in such an embodiment, the inner shaft **200** is dynamically locked and/or dynamically coupled to the intermediate shaft **140** and/or with respect to the intermediate shaft **140**.

[0107] With reference now to FIG. **4**, a side view of one embodiment of the self-expanding coring element **206** is shown. The self-expanding coring element **206** can comprise a variety of shapes and sizes and can be made from a variety of materials. In some embodiments, the self-expanding coring element can be made from a shape memory material such as, for example, a shape memory alloy and/or a shape memory polymer. In some embodiments, the self-expanding coring element **206** can comprise a nitinol and/or a nitinol alloy. In some embodiments, the self-expanding coring element **206** can comprise a braid that can, for example, form a semi-rigid collapsible structure.

[0108] The self-expanding coring element **206** can be made using a variety of techniques including, for example, welding, laser welding, cutting, laser cutting, braiding, expanding, or the like. In some embodiments, the self-expanding coring element **206** can be laser cut from a piece of nitinol such as, for example, a nitinol tube, after which the self-expanding coring element **206** can be blown up and/or expanded. In some embodiment, the self-expanding coring element **206** can be laser cut nitinol, laser cut polymer tube, one or several wireform structures, metal or polymeric, or one or several injection molded polymeric structures. In some embodiments, the self-expanding coring element **206** can be castellated nitinol wire braid, nitinol braided structure, laser cut nitinol, laser cut polymer tube, injection molded polymeric structure, an inflatable balloon, or one or several other metal or polymeric structures.

[0109] The self-expanding coring element **206** can comprise a fenestrated structure **400**, which can be a unitary fenestrated structure, a non-unitary fenestrated structure, and/or a stent or a stent portion that can be configured to core and separate a portion of a thrombus such as a vascular thrombus from the blood vessel containing the thrombus. This fenestrated structure **400** can comprise a plurality of struts **402** that together define a plurality of interstices **404**. The struts can comprise a variety of shapes and sizes, and in some embodiments, the struts can have a thickness and/or diameter between approximately 0.05 and 0.15 inches, between approximately 0.075 and 0.125 inches, between approximately 0.09 and 0.1 inches, and/or of approximately 0.096 inches.

[0110] In some embodiments, the self-expanding coring element **206** can comprise a first region **406** and a second region **408**. The second region **408** can be generally tubular and can include a plurality of interconnected struts **402**. The first region **406**, as seen in FIG. **5**, can comprise a reduced number of struts **402** as compared to the second region to facilitate the collapse of the self-expanding coring element **206** to a non-expanded configuration and to maintain a coring orientation when the blood vessel is tortuous. In some embodiments, the first region can further comprise two curved struts **410**-A, **410**-B twisting in opposite directions around a central axis **412**, also referred to herein as a longitudinal axis **412**, of the self-expanding coring element **206** to define a mouth **414** of the self-expanding coring element **206**.

[0111] In some embodiments, the connection of the self-expanding coring element **206** to the intermediate shaft **140** via the two curved struts **410**-A, **410**-B can improve the operation of the thrombus extraction device **202** by flexibly connecting the self-expanding coring element **206** to the intermediate shaft **140**. Particularly, the removal of struts from region **420** of the self-expanding coring element **206** allows the self-expanding coring element **206** to flex about a connection member **415** located at the proximal end **210** of the self-expanding coring element **206** and connecting the self-expanding coring element **206** to the intermediate shaft **140** of the thrombus extraction catheter **104**. This ability to flex can facilitate the maintenance of the coring orientation with the blood vessel is tortuous. In some embodiments, such flexing of the self-expanding coring element **206** can result in the region **420** functioning as the mouth **414**.

[0112] As seen in FIG. **4**, the curved struts **410** extend at an angle θ, also referred to herein as a coring angle, relative to the central axis **412** from a bottom **416** of the self-expanding coring element **206** towards the top 418 of the self-expanding coring element **206**. In some embodiments, this angle can be between 20 degrees and 50 degrees and/or between 30 degrees and 45 degrees when fully expanded.

[0113] In some embodiments, the coring angle can either positively or adversely affect the operation of the TED **202**. For example, too steep a coring angle can prevent the self-expanding coring element **206** from being collapsible and thus prevent the retraction of the self-expanding coring element **206** into the introducer sheath **102**. Additionally, too shallow a coring angle can result in the self-expanding coring element **206** too easily collapsing which can decrease the coring ability of the self-expanding coring element **206**. In some embodiments, this decrease in the coring ability of the self-expanding coring element **206** can result in the self-expanding coring element **206** no longer effectively coring thrombus.

[0114] In some embodiments, the most proximal edge of the two curved struts **410**-A, **410**-B, referred to herein as a leading edge **411**, can be sharpened and/or the leading edge **411** of the two curved struts **410**-A, **410**-B can comprise a cutting element, knife, or the like

[0115] The self-expanding coring element **206** can comprise a variety of sizes. In some embodiments, the self-expanding coring element **206** can comprise a length, defined as the shortest distance between the proximal end **210** of the self-expanding coring element **206** and the distal end **214** of the self-expanding coring element **206**, of between approximately one and 3 inches, between approximately 1.5 and 2.5 inches, between approximately 1.75 and

2.25 inches, between approximately 1.9 2.0 inches, and/or of approximately 1.96 inches. In some embodiments, the self-expanding coring element **206** can comprise a fully expanded diameter between approximately 2 and 50 mm, between approximately 4 and 25 mm, between approximately 6 and 20 mm, and/or between approximately 8 and 16 mm. In some embodiments, the self-expanding coring element can be applied to debulking of an artery or vein such as, for example, the inferior vena cava. In some embodiments, such debulking can be performed in response to the occluding and/or partial occluding of one or several filters in the inferior vena cava.

[0116] In some embodiments, the length and the diameter of the self-expanding coring element **206** can be selected based on the size of the blood vessel, and particularly the diameter of the blood vessel from which thrombus is to be extracted. In some embodiments, the length of the self-expanding coring element **206** can be selected based on the fully expanded diameter of the self-expanding coring element **206** to prevent undesired tipping and/or rotation of the self-expanding coring element within the blood vessel and with respect to the blood vessel. As used anywhere herein, "approximately" refers to a range of +/−10% of the value and/or range of values for which "approximately" is used.

[0117] With reference now to FIG. **7**, a side view of one embodiment of the thrombus extraction device **202** is shown. As seen in FIG. **7**, the self-expanding coring element **206** is connected via the connection member **415** at the proximal end **210** of the self-expanding coring element **206** to the distal end **212** of the intermediate shaft **140**. The proximal end **216** of the expandable cylindrical portion **208** connects to the distal end **214** of the self-expanding coring element **206**. In some embodiments, the expandable cylindrical portion **208** and specifically the proximal end **216** of the expandable cylindrical portion **208** is formed on the distal end **214** of the self-expanding coring element **206** to thereby form a unitary thrombus extraction device **202**. The distal end **217** of the expanding cylindrical portion **208** connects to the distal end **218** of the inner shaft **200**.

[0118] In some embodiments, and as seen in FIG. **7**, the self-expanding coring element **206** can engage with all or portions of the inner shaft **200** to affect the expansion of the self-expanding coring element **206**. Specifically, in some embodiments, the self-expanding coring element **206** can include one or several features that can together form an expansion mechanism. **701**. In some embodiments, the expansion mechanism **701** can include a ring **700**, also referred to herein as a ring feature **700**. The ring **700** can be the same material as the self-expanding coring element **206** or can be a different material than the self-expanding coring element **206**. The ring **700** can be integrally formed with the self-expanding coring element **206** and/or can be attached to the self-expanding coring element via, for example, one or several welds, adhesive, one or several mechanical fasteners, or the like. The ring **700** can have a diameter larger than the diameter of the inner shaft **200** such that the ring **700** is slidable along the inner shaft **200**.

[0119] As further seen in FIG. **7**, the expansion mechanism **701** can include a stop **702** that can be located on one of the shafts such as, for example, one of: the second intermediate shaft **3000**; the third intermediate shaft **3002**; and the inner shaft **200**. In some embodiments, the stop **702** can comprise a polymeric member and/or metallic member that is affixed to a portion of the inner shaft **200**. The stop **702** can, in some embodiments, have the form of a tab, a protrusion, a flange, a ridge or the like. In some embodiments, the stop **702** can be sized and shaped to engage with the ring **700** to thereby apply proximally directed force to the self-expanding coring element **206** when shaft **200**, **3000**, **3002** to which the stop **702** is connected is proximally displaced via, for example movement of the plunger **154** to the second position and/or displacement of a shuttle moved according to a spring, such as a constant force spring connected to the shuttle. In some embodiments, a portion of the self-expanding coring element **206** located between the ring **700** and the connection member **415** can be forcibly expanded by the application of this proximally directed force to ring **700**, thereby moving the self-expanding coring member **206** to full expansion. In another embodiment, the expansion mechanism **701** does not include the ring **700** and the stop **702** is not attached the one of the intermediate shafts **140**, **3000**, **3002**, rather, the expansion mechanism **701** comprises a wire or filament that can be, for example, a metallic or polymeric material. The wire or filament wraps through the self-expanding coring element **206** and can be attached such as fixedly attached to one of the shafts such as, for example, the outer shaft **138** of the thrombus extraction catheter **104**. In such an embodiment the stop **702** feature is engaged when the self-expanding coring element **206** is fully deployed by the wire or filament creating tension on the self-expanding coring element **206**. In some embodiments, for example, the terminating end of the filament can be fixed to one of the shafts such as, for example, the outer shaft **138** of the thrombus extraction catheter **104** via a compression or tension spring, which spring allows the self-expanding coring element **206** to reduce in diameter slightly without disengaging the stop **702**. In some embodiments, the wire or filament is comprised of an elastic material to include the functionality of the compression or tension spring.

[0120] In some embodiments, the inner shaft **200** of the thrombus extraction catheter **104** can be selectively connected to the distal end **217** of the expandable cylindrical portion **208**. This can allow the displacement of the inner shaft **200** to bring the self-expanding coring element **206** to full expansion via the engagement of the ring feature **700** with the stop **702**. In some embodiments, and after the self-expanding coring element **206** is at full expansion, the inner shaft **200** can be recoupled to the distal end **217** of the expandable cylindrical portion **208** such that the expandable cylindrical portion **208** is fully expanded and/or can be recoupled to the distal end **217** of the expandable cylindrical portion **208** to compress the expandable cylindrical portion **208** when the plunger **154** is moved from the second position to the first position.

[0121] In some embodiments, the expandable cylindrical portion **208** can comprise a braided filament mesh structure **704** that can be configured to capture thrombus. In some embodiments, the braided filament mesh structure can be coextensive with the expandable cylindrical portion **208** and thus can share a proximal end **216** and/or a distal end **217**. In the embodiment shown in FIG. **7**, the braided filament mesh structure **704** is a braid of elastic filaments having a generally tubular, elongated portion **706** and a distal tapered portion **708**. In other embodiments, the braided filament mesh structure **704** can be any porous structure and/or can have other suitable shapes, sizes, and configurations (e.g., the distal portion **708** can be generally cylindrical, etc.).

[0122] Due to the connection of the braided filament mesh structure **704** to the distal end **218** of the inner shaft **200**, axial movement of the inner shaft **200** radially expands/shortens or collapses/lengthens the braided filament mesh structure **704** of the TED **200**. For example, so long as the intermediate shaft **140** is fixed and/or limited to axial movement at a rate less than that of the inner shaft **200**: (1) distal movement of the inner shaft **200** stretches the braided filament mesh structure **704** along its longitudinal axis such that the radius of the braided filament mesh structure **704** decreases and the length of the braided filament mesh structure **704** increases; and (2) proximal movement of the inner shaft **200** compresses the braided filament mesh structure **704** along its longitudinal axis such that the radius of the braided filament mesh structure **704** increases and the length of the braided filament mesh structure **704** decreases. The filament mesh structure **704** can be positioned in a plurality of configurations including, for example, a stacked configuration, a collapsed configuration, and an expanded configuration. The filament mesh structure **704** in the stacked configuration can have a shorter length than the filament mesh structure **704** in the expanded configuration, and the filament mesh structure **704** in the expanded configuration can have a shorter length the filament mesh structure **704** in the collapsed configuration. In certain embodiments, the braided filament mesh structure **704** can have any desired length in the collapsed configuration, including, for example, a length in the collapsed configuration between approximately 1 and 80 inches, between 2 and 60 inches, between 3 and 50 inches, between approximately 5 and 30 inches, between approximately 10 and 20 inches, and/or of approximately 16 inches, and in some embodiments, the braided filament mesh structure **704** can have a length in the expanded configuration of between approximately 1 and 25 inches, between approximately 10 and 20 inches, and/or of approximately 11 inches. In some embodiments, the filament mesh structure **704** can have any desired length in the stacked configuration including, for example, a length between 1 and 50 inches, a length between 1 and 30 inches, a length between 1 and 20 inches, a length of between 1 and 15 inches, between 2 and 10 inches, and/or of approximately 5 inches in the stacked configuration.

[0123] In some embodiments, the braid angles of the filament mesh structure **704** can change between configurations. In some embodiments, for example, the filament mesh structure **704** can be defined by a braid angle θ as shown in FIG. **7**. The braid angle θ can be the angle between the wire/filament **750** of the braid and the center line **752** of the braid. As the length of the filament mesh structure **704** increases, the braid angle θ can decrease, and as the length of the filament mesh structure **704** decreases, the braid angle θ can increase. In some embodiments, the braid angle θ of the filament mesh structure **704** can be less than approximately 10°, less than approximate 20°, less than approximately 30°, less than approximately 40°, and/or less than approximately 50° when the filament mesh structure **704** is in the collapsed configuration. In some embodiments, the braid angle of the filament mesh structure **704** can be between 20° and 85°, between 30° and 70°, between 35° and 60°, between 40° and 50°, and/or approximately 45° when the filament mesh structure **704** is in the expanded configuration. In some embodiments, the braid angle of the filament mesh structure **704** can be greater than approximately 45°, greater than approximately 60°, greater than approximately 70°, and/or greater than approximately 80° when the filament mesh structure **704** is in the stacked configuration.

[0124] In some embodiments, the braided filament mesh structure **704** can be formed by a braiding machine and/or weaving machine, and in some embodiments, the braided filament mesh structure **704** can be manually braided and/or woven. It can be advantageous to utilize a braiding machine and/or weaving machine that does not employ bobbins or other filament spooling mechanisms, typical of many conventional braiders as they make forming the braid onto the self-expanding coring element **206** significantly more difficult. Braiding machine and/or weaving machine where the filaments are free-hanging allow for much easier loading directly onto the self-expanding coring element **206**. In some embodiments, the braided filament mesh structure **704** can be braided using methods or devices contained in some or all of: U.S. Pat. No. 8,833,224, entitled "BRAIDING MECHANISM AND METHOD OF USE", and filed on May 8, 2013; U.S. Pat. No. 8,826,791, entitled "BRAIDING MECHANISM AND METHOD OF USE", and filed on Sep. 10, 2012; U.S. Pat. No. 8,261,648, entitled "BRAIDING MECHANISM AND METHOD OF USE", and filed on Oct. 17, 2011; U.S. Pat. No. 8,820,207, entitled "BRAIDING MECHANISM AND METHOD OF USE", and filed on Apr. 26, 2013; U.S. Patent Publication No. 2016/0030155, entitled "ANEURYSM GRAFT WITH STABILIZATION", and entering the U.S. National Phase on Sep. 14, 2015; and U.S. Patent Publication No. 2014/0318354, entitled "BRAIDING MECHANISM AND METHOD OF USE", and filed on Jul. 11, 2014; the entirety of each of which is hereby incorporated by reference herein.

[0125] In some embodiments, the braided filament mesh structure **704** may be formed as a tubular braid, which tubular braid may then be further shaped using a heat setting process. In some embodiments, the braid may be a tubular braid of fine metal wires such as nitinol (nickel-titanium alloy), platinum, cobalt-chrome alloy, stainless steel, tungsten or titanium. In some embodiments, the braided filament mesh structure **704** can be formed at least in part from a cylindrical braid of elastic filaments. Thus, the braid may be radially constrained without plastic deformation and will self-expand on release of the radial constraint. Such a braid of elastic filaments is herein referred to as a "self-expanding braid."

[0126] In some embodiments, the thickness of the braid filaments can be less that about 0.15 mm. In some embodiments, the braid may be fabricated from filaments and/or wires with diameters ranging from about 0.05 mm to about 0.25 mm. In some embodiments, braid filaments of different diameters may be combined to impart different characteristics including: stiffness, elasticity, structure, radial force, pore size, embolic capturing or filtering ability, etc. In some embodiments, the braided filament count is between 20 and 80, is greater than 30, and/or is approximately 24. Pore sizes of the braided mesh in the elongated portion **706** may be in the range of about 0.4 mm to 4.0 mm. In some embodiments, the pore size may be in the range of 0.5 mm to 2.5 mm.

[0127] In some cases thrombus may form a shape that is difficult to retract into the introducer sheath **102** when thrombus is within the braided filament mesh structure **704**. Such a case is depicted in FIG. **8** in which the thrombus extraction device **202**, and specifically the braided filament mesh structure **704**, is partially retracted into the introducer sheath **102**. As depicted in FIG. **8**, thrombus **800** has formed

a ball that has a diameter larger than the diameter of the introducer sheath **102**. Such behavior by the thrombus **800** can prevent the removal of the TED **200** and the thrombus **800** from the patient's body. FIGS. **9** and **10** address features to prevent such behavior by the thrombus.

[0128] FIG. **8** further shows a cross-section view of the elongate member **106** such that the lumen **1702** of the elongate member is visible, a cross-section of the outer shaft **138** such that the lumen **802** of the outer shaft **138** is visible, and a cross-section of the intermediate shaft **140** such that the lumen **804** of the intermediate shaft **140** is visible.

[0129] With reference now to FIG. **9**, a side view of one embodiment of the braided filament mesh structure **704** comprising multiple pore sizes is shown. As seen, the braided filament mesh structure **704** comprises a first portion **900** comprising a first plurality of pores **904** and a second portion **902** comprising a second plurality of pores **906**. In some embodiments, the first portion **900** can correspond to the elongated portion **706**, and the second portion **902** can correspond to the distal tapered portion **708**.

[0130] As shown in FIG. **9**, the first portion **900** of the braided filament mesh structure **704** is relatively more proximal than the second portion **902**. As further shown, the pores in the first plurality of pores **904** of the first portion **900** are smaller than the pores in the second plurality of pores **906** of the second portion **902**. In some embodiments, the larger pores of the distal, second portion **902** can have an average size greater than or equal to 1.5 mm, and in some embodiments, between approximately 1.0 mm and 4.0 mm.

[0131] In such an embodiment, the larger size of the pores of the second plurality of pores **906** can allow and/or facilitate the extrusion of portions of the thrombus when the braided filament mesh structure **704** is moved to the unexpanded configuration and/or when the braided filament mesh structure **704** is retracted into the introducer sheath **102**. In some embodiments, this extrusion of portions of the thrombus can prevent the case in which the thrombus cannot be retracted into the introducer sheath **102**. Further, in some embodiments, relatively newer portions of thrombus can be extruded before relatively older portions of thrombus as relatively newer portions of thrombus can be softer and/or more malleable. These relatively newer portions of the thrombus can then be captured and/or broken down by features of the introducer sheath **102**.

[0132] In some embodiments, and as seen in FIG. **9**, the braided filament mesh structure **704** can transition from the first portion **900** to the second portion **902** by the longitudinal overlaying of one or several first wires **910** or first filaments **910** with one or several second wires **912** or second filaments **912**. In some embodiments, for example, a first wire **910** can be longitudinally overlaid with a second wire **912** thereby forming a wire pair **914**. In some embodiments, the first and second wires **910**, **912** forming the wire pair **914** can then be woven as a single wire to thereby increase the pore size in portions of the braided filament mesh structure **704** woven with the wire pair **914**. In some embodiments, for example, the first portion **900** can comprise a 48 wire mesh. In the second portion **902**, one-half of the wires or filaments forming the 48-wire mesh can be first wires **910** and the other half of the wires or filaments forming the 48-wire mesh can be second wires **912**. Each of the first wires **910** can be longitudinally overlaid by one of the second wires **912**, thereby forming **24** wire pairs **914**. These wire pairs **914** can then be woven to form a 24-wire mesh having a larger pore size than the 48-wire mesh.

[0133] With reference now to FIG. **10**, a side view of one embodiment of the TED **200** comprising a plurality of circumferential depressions **1000**, also referred to herein as circumferential grooves, radial ribs, and/or radial grooves, is shown. In some embodiments, some or all of this plurality of circumferential depressions **1000** can inwardly extend towards a central axis **1002** and/or midline **1002** of the thrombus extraction device **202**. In some embodiments, the plurality of circumferential depressions **1000** can be longitudinally spaced and/or equally spaced along the length of the expandable cylindrical portion **208** and/or the braided filament mesh structure **704** between the proximal end **216** and the distal end **217** of the cylindrical portion **208** and/or the braided filament mesh structure **704**. In some embodiments, these circumferential depressions **1000** can, when the thrombus extraction device **202** is moved from an expanded configuration to an unexpanded configuration, engage with portions of the thrombus contained within the cylindrical portion **208** and/or the braided filament mesh structure **704** to inhibit movement of the thrombus with respect to one or both of the proximal end **216** and the distal end **217** of the cylindrical portion **208** and/or the braided filament mesh structure **704**. This inhibition of thrombus movement can decrease the likelihood of the creation of thrombus that cannot be retracted into the introducer sheath **102**.

[0134] Although depicted in separate figures, some embodiments of the thrombus extraction device **202** can include both the plurality of circumferential depressions discussed with respect to FIG. **10** and multiple pore sizes as discussed with respect to FIG. **9**.

[0135] With reference now to FIG. **11**, a schematic illustration of one embodiment of a weaving pattern for forming the cylindrical portion **208** and/or the braided filament mesh structure **704** onto the self-expanding coring element **206** at one or several formation points **1103** is shown. As seen, the self-expanding coring element **206** comprises a plurality of struts **402** that connect at formation points **1103** comprising peaks **1100**, also referred to herein as peak struts **1100**. As seen, each of the peaks **1100** is formed by the intersection of a first strut **402**-A and a second strut **402**-B, which intersecting struts **402**-A, **402**-B form a peak aperture **1101**.

[0136] In some embodiments, the self-expanding coring element **206** can comprise a plurality of peaks **1100** extending around the distal end of the self-expanding coring element **206**. The plurality of peaks **1100** can comprise 4 peaks **1100**, 6 peaks **1100**, 8 peaks **1100**, 10 peaks **1100**, 12 peaks **1100**, 16 peaks **1100**, 20 peaks **1100**, 24 peaks **1100**, between 4 and 50 peaks, between 8 and 20 peaks, and/or any other or intermediate number of peaks.

[0137] The cylindrical portion **208** and/or the braided filament mesh structure **704** can comprise a plurality of filaments **1102** woven and/or braided together to form the cylindrical portion **208** and/or the braided filament mesh structure **704**. In some embodiments, the plurality of filaments can include, for each of the peaks **1100** of the self-expanding coring element **206**, a first filament **1104** and the second filament **1106**. The first and second filaments **1104**, **1106** can be woven and/or braided onto their respective peak. In some embodiments, the first and second filaments **1104**, **1106** can be woven and/or braided onto their respective peak such that one or both of the first and second filaments **1104**, **1106** form a loop about their respective

peak. Thus, in some embodiments, the only the first filament **1104** forms a look about its peak, only the second filament **1106** forms a loop about its peak, or both the first and second filaments **1104**, **1106** form loops about their peak. With reference to the embodiment of FIG. **11**, the first filament **1104** can be inserted straight through the peak aperture **1101** of its peak such that the first filament **1104** does not loop on itself directly adjacent to its peak, and more specifically, directly distal of its peak.

[0138] The first filament **1104** can be inserted through the peak aperture **1101** of its peak **1100** such that the first filament **1104** passes, when looking from the outside of the self-expanding coring element **206** towards the inside of the self-expanding coring element **206**, on top of the first strut **402**-A and under the second strut **402**-B.

[0139] The second filament **1106** can be inserted through the peak aperture **1101** of its peak such that the portion of the second filament **1106** passing through the peak aperture **1101** is separated from the peak by the first filament **1104**. Further, the second filament **1106** can be inserted through the peak aperture **1101** such that the second filament **1106** passes underneath the first strut **402**-A and over the second strut **402**-B. after insertion through the peak aperture **1101**, the second filament **1106** can be looped on itself to form a loop **1108** directly distal to its peak **100**.

[0140] In some embodiments, because each filament **1104**, **1106** is inserted through a peak aperture **1101**, each filament **1104**, **1106** can be treated, for braiding or weaving purposes as comprising a first wire extending from its peak **1100** to a first end of the filament **1104**, **1106** and a second wire extending from its peak to a second end of that filament **1104**, **1106**. Thus, in some embodiments in which the self-expanding coring portion **206** comprises 12 peaks, the cylindrical portion **208** and/or the braided filament mesh structure **704** can be formed from 24 filaments **1104**, **1106** which can be woven and/or braided as 48 wires to form a 48 wire mesh and/or weave.

[0141] In some embodiments, the cylindrical portion **208** and/or the braided filament mesh structure **704** can be braided/woven by, identifying the plurality of formation points **1103** formed by some of the struts **402** of the self-expanding coring element **206**. Unique pairs of wires can be threaded through each of the formation points **1103**, and specifically through the peak aperture **1101** adjacent to each of the formation points **1103**. In some embodiments, each unique pair of wires can comprise a first wire **1104** and a second wire **1106** overlaying the first wire **1104**. The first and second wires can then be woven and/or braided into a net-like filament mesh structure of the cylindrical portion **208** and/or the braided filament mesh structure **704** from the unique pairs of wires such that the first wires **1104** do not form loops about the formation points **1103** through which the first wires **1104** are threaded and such that the second wires **1106** form loops **1108** about the formation points **1103** through which the second wires **1106** are threaded.

[0142] With reference now to FIG. **12**, a section view of an embodiment of the handle **134** in which the plunger **154** is in the first position is shown, and with reference to FIG. **13** a section view of an embodiment of the handle **134** in which the plunger **154** is in the second position is shown. The handle **134** can include a housing **1200** that defines an internal volume **1202**. A plunger shaft **1204** can extend through all or portions of the internal volume **1202** and can connect to the shaft connecting and/or coupled to some or all of the expansion features including portions of the expansion mechanism **701** such as, for example, the ring **700** or the stop **702**. In some embodiments, this shaft can include, for example, the second intermediate shaft **3000**, the third intermediate shaft **3002**, or the inner shaft **200**, which inner shaft **200** can define the previously referenced lumen **1400**, also referred to herein as inner shaft lumen **1400**. The plunger shaft **1204** can terminate at a plunger guide **1208** that is affixed to the plunger shaft **1204**. In some embodiments, and as seen in FIGS. **12** and **13**, the plunger **154** can be biased towards a first position by a plunger spring **1209** which can engage a portion of the handle **134** and the plunger guide **1208**. Thus, the plunger spring **1209** is less compressed when the plunger **154** is in the first position as is shown in FIG. **12**, and the plunger spring **1209** is more compressed when the plunger **154** is in the second position as is shown in FIG. **13**. In some embodiments, this bias towards the first position can create a bias in the thrombus extraction device **202** towards the partial expansion configuration.

[0143] As seen in FIG. **14**, a close-up view of the encircled portion "A" indicated in FIG. **13**, the plunger guide **1208** can be positioned between a proximal stop **1210** and a distal stop **1212**, which proximal stop **1210** and which distal stop **1212** can be each affixed to the shaft connecting and/or coupled to some or all of the expansion features, which shaft can include, for example, the second intermediate shaft **3000**, the third intermediate shaft **3002**, or the inner shaft **200** including the inner shaft lumen **1400**. The plunger guide **1208** can be dynamically connected to the proximal stop **1210** via a stent compliance spring **1214**, also referred to herein as a compliance spring **1214**. In some embodiments, the use of the compliance spring **1214** to connect the plunger guide **1208** and the proximal stop **1210** can allow a change in the diameter of the self-expanding coring element **206** according to compressive forces applied to the self-expanding coring element **206**.

[0144] In some embodiments, for example, via the interaction of the ring feature **700** and the stop **702**, radial compressive forces applied to the self-expanding coring element **206** can be transferred from the self-expanding coring element **206** via the ring feature **700** and the stop **702** to the compliance spring **1214**. In embodiments in which the compressive force is greater than the spring force, the compliance spring **1214** can be compressed and the shaft connecting and/or coupled to some or all of the expansion features, which shaft can include, for example, the second intermediate shaft **3000**, the third intermediate shaft **3002**, or inner shaft **200** can distally advance relative to the intermediate shaft **140** to thereby reduce the diameter of the self-expanding coring element **206** until the compressive force is equal to the spring force. This compliance achieved via the compliance spring **1214** enables use of the thrombus extraction catheter **104** in blood vessels that can be arteries or venous vessels of non-constant diameter while maintaining desired contact of the self-expanding coring element **206** on the walls of the blood vessels, veins, or venous vessels. In some embodiments, this compliance can result in a constant outward force applied to the vessel walls by the self-expanding coring element **206** when the vessel has a diameter between approximately 1 and 30 mm, 2 and 25 mm, 5 and 20 mm and/or any other or intermediate diameter. In some embodiments, this constant outward force can be constant in that this outward force is within a predetermined

range. In some embodiments, for example, the outward force can be approximately 5 N when the diameter of the self-expanding coring element **206** is approximately 20 mm and the outward force can be approximately 20 N when the diameter of the self-expanding coring element **206** is approximately 5 mm. Thus, in some embodiments, a locking mechanism which can include the plunger **154** and the compliance spring **1214** can be configured to maintain a desired radial force on a vessel wall when the stent is compressed by that vessel wall. In some embodiments, this desired force can be a sufficient radial force on the vessel wall to core and/or separate all or portions of thrombus from the vessel wall when the self-expanding coring element **206** is at full expansion.

[0145] With reference now to FIGS. **15** and **16**, side views of embodiments of the obturator **120** are shown. As seen, the obturator **120** includes the proximal end **122**, the distal end **124**, and the elongate shaft **126**. As further seen, the obturator **120** can include a capture sheath **1500** proximally extending form the distal end **124** of the obturator **120**.

[0146] The Obturator **120** can further comprise a tip such as an atraumatic tip **1502** located at the distal end **124** of the obturator **120**. In some embodiments, the atraumatic tip **1502** can be radiopaque. The obturator **120** can further include a connection fitting **1504** that can be located at a proximal end **1506** of the capture sheath **1500**. In some embodiments, the connection fitting **1504** can be configured to sealingly connect with the distal end **110** of the elongate sheath **106** of the introducer sheath **102**.

[0147] The obturator **120** can further include a stop portion **1508** located at the proximal end **122** of the obturator **120**. In some embodiments, the stop portion **1508** can have a diameter larger than the lumen **1701** of the elongate member **106** of the introducer sheath **102** and/or larger than the diameter of the sealed aperture **112** located at the proximal end **108** of the introducer sheath **102** so as to prevent the stop portion **1508** from entering into the lumen **1701** of the elongate member **106** and/or the sealed aperture **112**.

[0148] In some embodiments, the elongate shaft **126** can comprise a constant size and/or diameter, and in some embodiments, the elongate shaft **126** can comprise multiple sizes and/or diameters. For example, the diameter **1510** of the elongate shaft **126** shown in FIG. **15** is constant along the length of the elongate shaft **126**. In contrast, the elongate shaft **126** shown in FIG. **16** has at least a first diameter **1512** along one or several first portions **1513** of the elongate shaft **126** and a second diameter **1514** along one or several second portions **1515** of the elongate shaft **126**.

[0149] In some embodiments, the one or several second portions **1515** of the elongate shaft can be located along the length of the elongate shaft **126** such, that when the obturator **120** is received within the elongate member **106** of the introducer sheath **102** and positioned so that the connection fitting **1504** seals with the distal end **110** of the elongate sheath **106**, the one or several second portions **1515** extend through the sealed aperture **112**. In such an embodiment, the second diameter **1514** can be selected such that the one or several second portions do not contact and/or dilate the sealed aperture **112** and/or a seal within the sealed aperture **112**. Because such an embodiment of the obturator **120** does not dilate the seal of the sealed aperture **112** when the one or several second portions extend through the sealed aperture **112**, the introducer sheath **102** can be stored, package, and/or sold with such an obturator **120** pre-positioned extending through the lumen **1701** of the elongate member **106**.

[0150] With reference now to FIG. **17**, a detailed section view of one embodiment of the capture sheath **1500** is shown. As seen, the capture sheath **1500** includes the atraumatic tip **1502** and is connected to the elongate shaft **126** of the obturator **120**, which elongate shaft **126** extends through a lumen **1701** of the elongate member **106**. As further seen, a lumen **1700** extends through the atraumatic tip **1502** and the elongate shaft **126**, which lumen **1700** can be configured to receive a guidewire.

[0151] That capture sheath **1500** includes a capture shell **1702** that distally extends from the atraumatic tip **1502** to the proximal end **1506** of the capture sheath **1500**. The capture shell **1702** terminates in the connection fitting **1504**. The capture shell **1702** has an internal diameter **1704** that is greater than a diameter **1706** of the portion of the elongate shaft **126** extending through the capture shell **1702**. Due to the larger internal diameter **1704** of the capture shell **1500**, a receiving space is created between the capture shell **1702** and the portion of the elongate shaft **126** extending through the capture shell **1702**. In some embodiments, this receiving space can be sized and shaped to receive and/or retain a self-expanding funnel **1708** in a constrained configuration. In some embodiments, the self-expanding funnel **1708** can have a diameter matching the internal diameter **1704** of the capture shell **1702** when the self-expanding funnel **1708** is in the constrained configuration. In some embodiments, this diameter of the self-expanding funnel can be less than or equal to a diameter **1716** of the elongate member **106**.

[0152] The self-expanding funnel **1708** can comprise a variety of shapes and sizes and can be made from a variety of materials. In some embodiments, the self-expanding funnel **1708** can have a maximum diameter greater than and/or equal to the diameter of the self-expanded coring element **206** in full expansion, and in some embodiments, the self-expanding funnel **1708** can have a minimum diameter equal to the diameter **1716** of the elongate member **106** and/or to the diameter of the lumen **1701** of the elongate member **106**. In some embodiments, the self-expanding funnel **1708** can have a length greater than and/or equal to the length of the self-expanding coring element **206** such that the self-expanding coring element **206** can be received and contained within the self-expanding funnel **1708**.

[0153] In some embodiments, the self-expanding funnel **1708** can have a conically shaped portion, and specifically, a truncated-conically shaped portion. In some embodiments, the self-expanding funnel can be formed from at least one of a castellated nitinol braid, a nitinol braided stent, a laser cut nitinol, a laser cut polymer tube, an injection molded polymeric structure, or an inflatable balloon. In some embodiments, the self-expanding funnel **1708** can comprise a mesh having a pore size sufficiently small to prevent the passage of dangerous thrombus through the pores of the mesh. In some embodiments, the self-expanding funnel **1708** can be permeable to blood.

[0154] With reference now to FIGS. **18** through **20**, side views of embodiments of the introducer sheath **102** in different configurations are shown. In FIG. **18** the introducer sheath **102** is shown in an undeployed configuration, in FIG. **19**, the introducer sheath **102** is shown in a partially

deployed configuration, and in FIG. **20**, the introducer sheath **102** is shown in a fully deployed and/or deployed configuration.

[0155] Specifically, as seen in FIG. **18**, the obturator **120** extends through the lumen **1701** of the elongate member **106** and the self-expanding funnel **1708** is contained in a constrained configuration within the capture sheath **1500**. In FIG. **19**, the obturator **120** has been distally advanced to thereby release the self-expanding funnel **1708** from the constrained configuration and/or to deploy the self-expanding funnel **1708**. In some embodiments, the length of the obturator **120**, and specifically the length of the elongate shaft between the proximal end of the capture sheath **1500** and the stop portion **1508** is sufficient to allow the deployment of the self-expanding funnel **1708** from the capture sheath **1500** before further distal movement of the obturator **120** is prevented by the collision of the stop portion **1508** with the sealed aperture **112**.

[0156] After the self-expanding funnel **1708** has been deployed, the obturator **120** can be proximally retracted through the lumen **1701** of the elongate member **106** and the sealed aperture **112** and can be removed from the introducer sheath **102**. After the obturator **120** has been removed from the introducer sheath **102**, the introducer sheath is in the fully deployed configuration as shown in FIG. **20**.

[0157] In some embodiments, and as seen in FIG. **21**, the introducer sheath **102** can include an inflatable balloon **2100** located at, or proximate to the distal end **110** of the elongate member **106**. In some embodiments, the balloon **2100** can comprise a conically shaped internal portion **2102** that can be sized and shaped to receive the thrombus extraction device **202**, and specifically that can have a length greater than or equal to the length of the self-expanding coring element **206**.

[0158] With reference now to FIG. **22**, an introduction technique for accessing the thrombus **2200** is shown. As depicted, the thrombus **2200** can be located in a blood vessel and accessed through an access site **2260** such as the popliteal access site or other venous or arterial access sites. The introducer sheath **102** can extend from the popliteal access site **2260**, or other venous or arterial access sites, to the deployment position **2262** at which the self-expanding funnel **1708** can be deployed and which can be proximate to the thrombus **2200**. The TED **202** can be passed through the clot **2200** in the direction of blood flow and the TED **202** can be retracted through the clot **2200** in a direction opposite blood flow. The retraction of the TED **202** through the clot **2200** can result in the coring of the clot with the self-expanding coring element **206** and the capturing of the clot in the expandable cylindrical **208**.

[0159] In some such embodiments, all or portions of the TED **202** can extend into one of the iliac veins and/or the inferior vena cava as depicted in FIG. **23**. Further, as the TED **202** is retracted from a proximal position with respect to the heart to a distal position with respect to the heart, the diameter of the blood vessel **2202** will decrease as the TED **202** is retracted towards the access site **2260**. This can result in increased compressive forces on the TED **202**, and specifically on the self-expanding coring element **206**. These compressive forces can be transferred via the ring feature **700** and the stop **702** to the compliance spring **1214**. Via the stretching or compressing of the compliance spring **1214**, the diameter of the TED **202** and specifically of the coring element **206** can change to match the diameter of the blood vessel and a desired radial force, and/or force level can be maintained.

[0160] FIGS. **23**-A to **23**-H, FIGS. **24**-A and **24**-B, FIGS. **25**-A to **25**-H, FIGS. **34**-A to **34**-H, FIGS. **41**-A to **41**-F, and FIGS. **42**-A and **42**-B depict processes for using the thrombus extraction system **100** to remove thrombus from a patient's body, and specifically from a blood vessel, which can be a venous vessel, in the patient's body. This can includes: accessing the blood vessel via one or several percutaneous access sites that can provide direct access to the blood vessel or indirect access to the blood vessel via one or several other blood vessels; advancing the introducer sheath to a position proximate to the thrombus; deploying the self-expanding funnel of the introducer sheath; advancing the distal end **132** of the thrombus extraction catheter **104** to a position proximate to the thrombus; deploying the thrombus extraction device **202**; capturing the thrombus in the thrombus extraction device **202** by retracting the thrombus extraction device **202** through the thrombus; collapsing the thrombus extraction device **202**; and removing the thrombus extraction device **202** and the captured thrombus from the introducer sheath **102** and from the patient's body. In some embodiments, these one or several access sites can include, for example, a popliteal access site, a femoral access site, a mid-femoral access site, a tibial access site, a contralateral access site, an internal jugular access site, and/or other venous or arterial access sites. In some embodiments, a thrombolytic agent can be infused and/or aspirated into or from the blood vessel before, during, or after the removal or extraction of the thrombus. This thrombolytic agent can comprise, for example, a tissue plasminogen activator (TPA) or other clot dissolving medication.

[0161] In any of the herein disclosed embodiments, the device and/or delivery system may be adapted to deliver energy to the device and thrombus or tissue surrounding the device at the treatment site for the purpose of facilitating removal of thrombus or healing of tissue adjacent the device or both. In some embodiments, energy may be delivered through a delivery system to the device for treatment of a patient's vasculature such that the device is heated or actuated by the energy. Examples of energy that may be delivered include but are not limited to light energy, thermal energy, vibration energy, electromagnetic energy, radio frequency energy and ultrasonic energy. For some embodiments, energy delivered to the device may trigger the release of chemical or biologic agents to promote separation of thrombus from the vessel wall and/or to a patient's tissue for treatment of a patient's vasculature, healing of tissue disposed adjacent such a device or a combination thereof.

[0162] The process for using the thrombus extraction system **100** shown in FIGS. **22**-A to **22**-H, FIGS. **24**-A and **24**-B, FIGS. **25**-A to **25**-H, FIGS. **34**-A to **34**-D, FIGS. **41**-A to **41**-F, and FIGS. **42**-A and **42**-B can be performed with the direction of blood flow or against the direction of blood flow. Thus, in some embodiments, the direction of blood flow in FIGS. **22**-A to **22**-H, FIGS. **24**-A and **24**-B, FIGS. **25**-A to **25**-H, FIGS. **34**-A to **34**-D, FIGS. **41**-A to **41**-F, and FIGS. **42**-A and **42**-B, can be from left to right, or from right to left.

[0163] With reference now to FIGS. **23**-A to **23**-H, a process for expanding the thrombus extraction device **202** in a blood vessel such as a venous vessel is shown. The process for expanding the thrombus extraction device **202** in the vessel can be performed using all or portions of the throm-

bus extraction system **100**. In some embodiments, the process for expanding the thrombus extraction device **202** in the vessel can be performed in connection with a monitoring technique, such as fluoroscopy, angiography, and/or ultrasonic monitoring. In some embodiments, the monitoring technique can be used to monitor the deployment of the TED **202** in the vessel via observation of the one or several radiopaque markers located on the introducer sheath **102** and/or the thrombus extraction catheter **104**.

[0164] The process begins at FIG. **23**-A, wherein a thrombus **2200** is identified in a blood vessel **2202** such as venous vessel. In some embodiments, the thrombus **2200** can be located in the peripheral vasculature of the patient's body. The thrombus **2200**, also referred to herein as a clot **2200**, can comprise a proximal end **2204** and the distal end **2206**. In some embodiments, the identification of the blood vessel **2202** can further include the determination of whether the thrombus **2200** in the blood vessel **2202** is suitable for thrombus extraction. In some embodiments, the thrombus **2200** in the blood vessel **2202** can be suitable for extraction when the blood vessel **2202** has a diameter of at least 5 millimeters. In some embodiments, the thrombus **2200** in the blood vessel **2202** can be suitable for extraction when the blood vessel **2202** has a diameter of at least 5 millimeters and is at least one of a femoral vein, an iliac vein, a popliteal vein, a posterior tibial vein, an anterior tibial vein, or a peroneal vein.

[0165] After the thrombus has been identified, the process proceeds to the step shown in FIG. **23**-B, wherein the introducer sheath **102** is advanced, either with or against the direction of blood flow in the blood vessel, such that the distal end **110** of the introducer sheath **102** and/or the obturator **120** is proximate to the thrombus **2200**, and particularly is proximate to the thrombus **2200** at a position proximal of the thrombus **2200**. In some embodiments, this can include providing the introducer sheath **102** and percutaneously accessing the circulatory system of the patient and specifically a blood vessel or venous vessel of the patient via an access site **2208** which can be one of the above referenced access sites.

[0166] After the introducer sheath **102** has been advanced to a desired position, the self-expanding funnel **1708** can be deployed and/or unsheathed from the constrained configuration to the expanded configuration as depicted in FIG. **23**-C. In some embodiments, the self-expanding funnel **1708** can be deployed by the relative distal movement of the obturator **120** with respect to the elongate member **106** until the funnel **1708** is no longer constrained by the capture sheath **1500** and then the obturator **120** can be proximally retracted through the lumen **1701** of the elongate member **106** until the obturator **120** is removed from the introducer sheath **102**.

[0167] In some embodiments, the relative distal movement of the obturator **120** with respect to the elongate member can comprise fixing the position of the obturator **120** relative to the blood vessel **2202** and proximally retracting the elongate member **106** over the obturator **120** to unsheathe the self-expanding funnel **1708** until the stop **1508** contacts the sealed aperture **112** and/or until monitoring, which can be fluoroscopic monitoring, of radiopaque markers located in, for example, the tip **1502** of the obturator **120** and the distal end **110** of the elongate member **106** indicate that the self-expanding funnel **1708** is deployed and/or is no longer constrained by the capture sheath **1500**. Alternatively, in some embodiments, the relative distal movement of the obturator **120** with respect to the elongate member can comprise fixing the position of the elongate member **106** relative to the blood vessel **2202** and distally advancing the obturator **120** two unsheathe the self-expanding funnel **1708** until the stop **1508** contacts the sealed aperture **112** and/or until monitoring, which can be fluoroscopic monitoring, of radiopaque markers located in, for example, the tip **1502** of the obturator **120** and the distal end **110** of the elongate member **106** indicate that the self-expanding funnel **1708** is deployed and/or is no longer constrained by the capture sheath **1500**.

[0168] After the self-expanding funnel **1708** has been deployed, a portion of the thrombus extraction catheter **104** such as the outer shaft **138** can be inserted into the lumen **1701** of the introducer sheath **102** via the sealed aperture **112** as depicted in FIG. **23**-D. In some embodiments, this can include providing the thrombus extraction catheter **104** which comprises the thrombus extraction device **202**. In some embodiments, the thrombus extraction device **202** can be constrained within the outer shaft **138** and can inserted, together with the outer shaft **138**, into the lumen of the elongate member **106** via the sealed aperture **112**. In some embodiments, the outer shaft **138** of the thrombus extraction catheter **104** can have a diameter so as to dilate the seal of the sealed aperture **112** such that the sealed aperture **112** seals around and seals to the outer shaft **138**.

[0169] After the outer shaft **138** has been inserted into the lumen **1701** of the introducer sheath **102**, a portion of the thrombus extraction catheter **104** can be inserted via the introducer sheath **102** into the blood vessel **2202** as depicted in FIG. **23**-E. In some embodiments, the distal end **132** of the thrombus extraction catheter **104** can be advanced to a position proximate to the thrombus **2200** and/or to a position proximal to the thrombus **2200**. In some embodiments, the insertion and/or advance of the thrombus extraction catheter **104** can be monitored and specifically can be fluoroscopically monitored. In some embodiments, the position of one or several radiopaque markers, including radiopaque marker **222** of the thrombus extraction catheter **104** can be monitored.

[0170] After the portion of the thrombus extraction catheter **104** has been inserted into the blood vessel **2202**, a portion of the thrombus extraction catheter **104** can be distally advanced through the clot **2200** as depicted in FIG. **23**-F. In some embodiments, this distal advance through the clot **2200** can be either with or against the direction of blood flow. In some embodiments, the portion of the thrombus extraction catheter **104** distally advanced through the clot **2000** can contain and/or constrain the thrombus extraction device **202**. In some embodiments, distally advancing the portion of the thrombus extraction catheter **104** through the clot can include advancing the portion of the thrombus extraction catheter **104** until the radiopaque marker **222**, that can be fluoroscopically monitored and that can be located at the distal end **218** of the inner shaft **200**, is distally past the thrombus **2200** and/or a portion of the thrombus **2200**.

[0171] After the portion of the thrombus extraction catheter **104** is distally advanced through the clot **2200**, the thrombus extraction device **202** can be deployed as depicted in FIG. **23**-G. In some embodiments, the thrombus extraction device **202** can be deployed by either advancing the thrombus extraction device **202** beyond the distal end **204** of the outer shaft **138** or by retracting the outer shaft **138**

relative to the thrombus extraction device **202** until the thrombus extraction device **202** is beyond the distal end **204** of the outer shaft **138**. In some embodiments, the thrombus extraction device can be deployed such that the thrombus extraction device **202** is distally past the thrombus **2200** and/or distally past a desired portion of the thrombus **2200**.

[0172] In some embodiments, the thrombus extraction device is advanced beyond the distal end **204** of the outer shaft **138** by distally advancing the intermediate shaft **140** with respect to the outer shaft **138**. In some embodiments, the intermediate shaft **140** can be distally advanced until the lock feature **146** contacts the mating feature **148**, and the lock feature **146** can be mated and/or secured to the mating feature **148** to fix the relative position of the intermediate shaft **140** with respect to the outer shaft **138**.

[0173] In some embodiments, the deployment of the thrombus extraction device **202** can be monitored, and specifically, the deployment of the thrombus extraction device **202** can be fluoroscopically monitored via, for example, the radiopaque marker **222** and the radiopaque marker located at one or both of the distal end **204** of the outer sheath **138** and the distal end **212** of the intermediate sheath **140**. In some embodiments, the deployment of the thrombus extraction device **202**, and specifically the advancing of the thrombus extraction device **202** beyond the distal end **204** of the outer shaft **138** or retracting the outer shaft **138** relative to the thrombus extraction device **202** can be ceased based on a position the distal end **204** of the outer sheath **138** comprising the radiopaque marker (first radiopaque marker) relative to the radiopaque marker **222** located on the thrombus extraction device **202** (second radiopaque marker).

[0174] After the thrombus extraction device **202** is deployed, the thrombus extraction device **202** can be fully expanded as shown in FIG. **23**-H. In some embodiments, this can include allowing the full expansion of the thrombus extraction device **202** such that the thrombus extraction device **202** engages a wall **2220** of the blood vessel **2202**. In some embodiments, the thrombus extraction device **202** can be fully expanded by moving the plunger **154** from the first position to the second position and securing the plunger **154** in the second position to thereby fix the relative position of the inner shaft **200** with respect to the intermediate shaft **140**. In some embodiments, the movement of the plunger **154** from the first position to the second position proximally retracts the inner shaft **200** with respect to the intermediate shaft **140** to thereby fully expand the expandable cylindrical portion **208** of the thrombus extraction device **202**. The proximal retraction of the inner shaft **200** with respect to the intermediate shaft **140** can further bring the stop **702** into engagement with the ring feature **700** to thereby fully expand the self-expanding coring element **206**. In some embodiments, the securing of the plunger **154** in the second position can secure the self-expanding coring element **206** and the thrombus extraction device **202** in full expansion via the engagement of the stop **702** with the ring feature **700**.

[0175] With reference now to FIGS. **24**-A and **24**-B, alternative embodiments of the steps shown in FIGS. **23**-G and **23**-H are shown. In some embodiments, these alternative embodiments can be performed when the diameter of the blood vessel **2202** containing the thrombus **2200** decreases below a desired level distally beyond the thrombus **2200**. In some embodiments, for example, as the distance from the heart increases, the diameter of the blood vessel **2202** can decrease. In some embodiments, this diameter can decrease to a point that use of the thrombus extraction device **202** may no longer be possible.

[0176] In such an embodiment, an extension sheath **2300**, also referred to herein as a popliteal sheath **2300**, can be percutaneously inserted into the blood vessel **2202** through the wall **2220** of the blood vessel **2202** such that at least a portion of the extension sheath **2300** extends from the patient. In some embodiments, the extension sheath **2300** can be percutaneously inserted into the blood vessel **2202** at a position before the blood vessel diameter decreases below a desired value such as, for example, below 1 mm, 2 mm, 3 mm, 4 mm, 5 mm, 6 mm, 8 mm, 10 mm, or any other or intermediate value. In some embodiments the extension sheath **2300** can be inserted into the blood vessel **2202** via an access site such as, for example, the popliteal access site or other venous or arterial access sites.

[0177] The thrombus extraction device **202** can be deployed as depicted in FIG. **24**-A. In some embodiments, the thrombus extraction device **202** can be deployed by either advancing the thrombus extraction device **202** beyond the distal end **204** of the outer shaft **138** and into the extension sheath **2300** or by advancing the outer shaft **138** containing the thrombus extraction device **202** into the extension sheath and then retracting the outer shaft **138** relative to the thrombus extraction device **202** until the thrombus extraction device **202** is beyond the distal end **204** of the outer shaft **138**. In some embodiments, the thrombus extraction device can be deployed such that the thrombus extraction device **202** is distally past the thrombus **2200** and/or distally past a desired portion of the thrombus **2200**. In some embodiments, all or portions of the thrombus extraction device can be contained within the extension sheath **2300**.

[0178] In some embodiments, the outer shaft **138** of the thrombus extraction catheter **104** can be separable into a first piece and a second piece. In some embodiments, this separation can occur at a separation point that can comprise, for example, any feature configured to allow separation of the first and second pieces. These features can include a partial depth slit or score in the outer shaft **138**, an overlapping friction fit in the outer shaft **138**, or the like. In some embodiments, the separable outer shaft **138** can be used in the place of the extension sheath **2300**. In such an embodiment, the outer shaft **138** can exit the blood vessel **2202** via the access site such that the separable portion extends from inside the blood vessel **2202** to outside of the patient's body at the access point. In such an embodiment, the separation portion of the outer sheath **138** can serve as the extension sheath **2300** and can remain in the access point when the thrombus extraction device **202** is retracted. Thus, the thrombus extraction device **202** can be deployed by securing the position of the separation portion of the outer sheath **138** and retracting the thrombus extraction device **202** from that separation portion of the outer sheath **138**.

[0179] In some embodiments, the thrombus extraction device can be advanced beyond the distal end **204** of the outer shaft **138** by distally advancing the intermediate shaft **140** with respect to the outer shaft **138**. In some embodiments, the intermediate shaft **140** can be distally advanced until the lock feature **146** contacts the mating feature **148**. In some embodiments, the lock feature **146** can be mated

and/or secured to the mating feature **148** to fix the relative position of the intermediate shaft **140** with respect to the outer shaft **138**.

[0180] In some embodiments, the deployment of the thrombus extraction device **202** can be fluoroscopically monitored, and specifically, the deployment of the thrombus extraction device **202** can be fluoroscopically monitored via, for example, the radiopaque marker **222** and the radiopaque marker located at one or both of the distal end **204** of the outer sheath **138** and the distal end **212** of the intermediate sheath **140**. In some embodiments, the deployment of the thrombus extraction device **202**, and specifically the advancing of the thrombus extraction device **202** beyond the distal end **204** of the outer shaft **138** or retracting the outer shaft **138** relative to the thrombus extraction device **202** can be seized based on a position the distal end **204** of the outer sheath **138** comprising the radiopaque marker (first radiopaque marker) relative to the radiopaque marker **222** located on the thrombus extraction device **202** (second radiopaque marker).

[0181] After the thrombus extraction device **202** is deployed, the thrombus extraction device **202** can be fully expanded as shown in FIG. **24**-B. in some embodiments, the thrombus extraction device **202** can be fully expanded while all or portions of the thrombus extraction device **202** are contained in the extension sheath **2300**. In such an embodiment, the portions of the thrombus extraction device **202** contained in the extension sheath **2300** can be prevented from reaching full expansion by the extension sheath **2300**. In such an embodiment, the thrombus extraction device **202** can reach full expansion as the thrombus extraction device is proximately retrieved from the extension sheath **2300**.

[0182] In some embodiments, the full expansion of the thrombus extraction device **202** can include allowing the expansion of the thrombus extraction device **202** such that the thrombus extraction device **202** engages a wall **2220** of the blood vessel **2202**. In some embodiments, the thrombus extraction device **202** can be fully expanded by moving the plunger **154** from the first position to the second position and securing the plunger **154** in the second position to thereby fix the relative position of the inner shaft **200** with respect to the intermediate shaft **140**. The movement of the plunger **154** from the first position to the second position can proximally retract the inner shaft **200** with respect to the intermediate shaft **140** to thereby expand the expandable cylindrical portion **208** of the thrombus extraction device **202**. In some embodiments, the proximal retraction of the inner shaft **200** with respect to the intermediate shaft **140** can further bring the stop **702** into engagement with the ring feature **700** to thereby fully expand the self-expanding coring element **206**. In some embodiments, the securing of the plunger **154** in the second position can secure the self-expanding coring element **206** and the thrombus extraction device **202** in full expansion via the engagement of the stop **702** with the ring feature **700**

[0183] In some such embodiments in which the TED **202** is all or wholly contained within the extension sheath **2300**, the TED **202** can be retracted until the self-expanding coring element **206** is outside of the extension sheath **2300**, and which point the inner shaft **200** can be decoupled from the distal end **217** of the expandable cylindrical portion **208** and the plunger **154** can be moved from the first position to the second position to bring the self-expanding coring element **206** to full expansion. The TED **202** can then be further retracted and the expandable cylindrical portion **208** can be expanded by progressively recoupling the distal end **217** of the expandable cylindrical portion **208** with the inner shaft **200** as the expandable cylindrical portion **208** exits the extension sheath **2300** until the expandable cylindrical portion **208** has completely exited the extension sheath **2300** and is at full expansion with the distal end **217** of the expandable cylindrical portion **208** recoupled to the inner shaft **140**. Alternatively, in some embodiments, the distal end **217** of the expandable cylindrical portion **208** can remain uncoupled to the inner shaft **140** until the expandable cylindrical portion **208** has completely exited the extension sheath **2300**. Once the expandable cylindrical portion **208** has completely exited the extension sheath **2300**, the distal end **217** of the expandable cylindrical portion **208** can be recoupled to the inner shaft **200** and the expandable cylindrical portion **208** can be expanded to full expansion.

[0184] With reference now to FIGS. **25**-A to **25**-H a process for removal of thrombus **2200** with an expanded thrombus extraction device **202** is shown. In some embodiments, the thrombus **2200** can be removed via the capture of the thrombus in the thrombus extraction device **202** via the proximal retraction of the thrombus extraction device **202** through the thrombus **2200**, which proximal retraction of the thrombus extraction device **202** can be, for example, in a direction of blood flow through the blood vessel **2202** or against the direction of blood flow through the vessel **2202**. In some embodiments, the proximal retraction of the thrombus extraction device **202** through the thrombus **2200** can result in the capture of the distal end **2206** of the thrombus **2200** before the capture of the proximal end **2204** of the thrombus **2200**.

[0185] In some embodiments, the proximal retraction of the thrombus extraction device **202** can result in the separation and/or coring of at least a portion of the thrombus **2200** from the wall **2220** of the blood vessel **2202** by, for example, the self-expanding coring element **206** and/or the stent portion, and the capture of that separated portion of the thrombus **2200** within the expandable cylindrical portion **208**. In some embodiments, the expandable cylindrical portion **208** can be formed of the braided filament mesh structure that can be, for example, a net-like filament mesh structure. In some embodiments, a portion of the thrombus can be captured within the expandable cylindrical portion **208** by entering the expandable cylindrical portion **208** via the mouth **414** of the self-expanding coring element **206** and/or via one or several of the interstices **404** of the self-expanding coring element **206**.

[0186] As seen in FIG. **25**-A, the distal end **2206** of the thrombus **2200** is separated and/or cored from the walls **2220** of the blood vessel **2202** by the self-expanding coring element **206** via the proximal retraction of the thrombus extraction device **202**. As seen in FIG. **25**-B, the distal end **2206** of the thrombus **2200** is captured in the expandable cylindrical portion **208** of the thrombus extraction device by the continued proximal retraction of the thrombus extraction device through the thrombus **2200**. The separation and capture and/or coring and capture of further portions of the thrombus **2200** by the continued proximal retraction of the thrombus extraction device **202** is shown in FIGS. **25**-C, **25**-D, and **25**-E. As seen in FIG. **25**-E, the proximal end **2204** of the thrombus **2200** is cored and captured as the thrombus extraction device **202** is proximally retracted towards the self-expanding funnel **1708**.

[0187] In some embodiments, the thrombus extraction device **202** can be proximally retracted until a portion of the self-expanding coring element **206** is contained within the self-expanding funnel **1708** as seen in FIG. **25**-F, and specifically until the mouth **414** of the self-expanding coring element **206** is contained within the self-expanding funnel **1708**. In some embodiments, the containment of the mouth **414** within the self-expanding funnel **1708** can be fluoroscopically verified. In some embodiments, the mouth **414** can be determined as wholly contained within the self-expanding funnel **1708** via fluoroscopic monitoring based on the alignment/relative positioning of the distal end **212** of the intermediate shaft **140** comprising a radiopaque marker **2450** and/or the radiopaque marker **222** with respect to the distal end **110** comprising a radiopaque marker **2452** of the elongate member **106** of the introducer sheath **102**.

[0188] When the portion of the self-expanding coring element **206** is contained within the self-expanding funnel **1708**, or specifically when the mouth **414** of the self-expanding coring element **206** is wholly contained within the self-expanding funnel **1708**, the plunger **154** can be unlocked from the second position and can be moved from the second position to the first position to thereby move the thrombus extraction device **202** from and expanded configuration to an unexpanded configuration. In some embodiments, the unlocking of the plunger **154** from the second position can unlock and/or decouple the inner shaft **200** with respect to the intermediate shaft **140**, and the moving of the plunger **154** from the second position to the first position can cause the distal advancing of the inner shaft **200** relative to the intermediate shaft **140**.

[0189] In some embodiments, the thrombus extraction device **202** can be collapsed by moving the thrombus extraction device **202** from the expanded configuration to the unexpanded configuration prior to withdrawing the thrombus extraction device **202** from the patient's body so as to compress the thrombus **2200** captured by the thrombus extraction device **202**. In some embodiments, the compression of the thrombus **2200** by the thrombus extraction device **202** can secure the position of the thrombus within the thrombus extraction device **202** via, in some embodiments, the engagement of one or several of the plurality of circumferential depressions **1000** with the thrombus **2200**.

[0190] After the thrombus extraction device **202** has been collapsed, the thrombus extraction device **202** can be proximally retracted through the self-expanding funnel **1708** and into the elongate member **106** as depicted in FIG. **25**-G. In some embodiments, the collapse of the thrombus extraction device **202** and/or the retraction of the thrombus extraction device **202** into the self-expanding funnel **1708** and/or the elongate member can result in the extrusion of all or portions of the thrombus **2200** through pores of the expandable cylindrical portion **208** of the thrombus extraction device **202** including, for example, some or all of the first plurality of pores **904** and/or the second plurality of pores **906**. In some embodiments, the all or portions of the thrombus **2200** can be extruded through some or all of the second plurality of pores **906** which can be larger than the first plurality of pores **904**. In some embodiments, the pores in the second plurality of pores **906** can be sized to be sufficiently small such that any thrombus portions of the thrombus **2200** extruded through the pores is sufficiently small to have little or no clinical significance. In some embodiments, these extruded all or portions of the thrombus **2200** can be captured by the self-expanding funnel **1708**.

[0191] The thrombus extraction device **202** can continue to be proximally retracted as depicted in FIG. **25**-H until the thrombus extraction device **202** and the captured thrombus **2200** is fully contained within the elongate member **106**. In some embodiments, the seal dilator **170** can be inserted into the sealed aperture **112** and the thrombus extraction device **202** and the captured thrombus **2200** can then be withdrawn or removed from the patient's body and from the elongate member **106** via the sealed aperture **112** in the seal dilator **170**. In some embodiments, thrombus captured by the self-expanding funnel **1708** can then either be guided into the elongate member **106** and specifically into the lumen **1701** of the elongate member **106** or further compressed and/or broken up by the self-expanding funnel **1708** and then allowed to pass through the self-expanding funnel **1708**, and particularly through the mesh of the self-expanding funnel **1708**. In some embodiments, this thrombus can be aspirated through the lumen **1701** of the elongate member **106** and the aspiration port **114**. In some embodiments, the aspiration of the thrombus via the aspiration port **114** can include the opening of the aspiration valve **118**. After the thrombus is captured by the self-expanding funnel **1708** has been aspirated, the introducer sheath **102** can be removed from the patient's body.

[0192] With reference now to FIGS. **26-28**, introduction techniques for accessing the thrombus **2200** are shown. In some embodiments, these introduction techniques can allow the use of a larger sized introducer sheath **102** due to the larger size of the vessels in the path to the thrombus. In some embodiments, this larger size of the introducer sheath **102** can ease the removal of thrombus through the introducer sheath **102** as, in some embodiments, the size of the lumen **1701** of the introducer sheath **102** can increase as the size of the introducer sheath **102** increases. Further, in some embodiments, the user of a larger sized introducer sheath **102** can allow the removal of larger thrombus. In some embodiments, the lengths of the components of the thrombus extraction system **100**, and particularly the lengths of the introducer sheath **102** and the thrombus extraction catheter **104** can vary based on the selected technique for accessing the thrombus and/or based on the location of the thrombus.

[0193] As seen in FIG. **26**, the introducer sheath **102** can be inserted into the patient's body via an internal jugular access site **2500**. The introducer sheath **102** can extend from the internal jugular access site **2500** to the deployment position **2502** which can be proximal to the thrombus **2200**. In embodiments in which the introducer sheath **102** comprises the self-expanding funnel **1708**, the self-expanding funnel **1708** can be deployed at the deployment position **2502**. In the embodiment shown in FIG. **26**, the introducer sheath can extend from the internal jugular access site **2500** through the superior vena cava and the inferior vena cava to the deployment position **2502** in one of the common iliac veins. In some embodiments, the deployment position **2502** can be located in, for example, the inferior vena cava, one of the iliac veins, the femoral vein, the popliteal vein, before or beyond the iliac arch, or any other location proximate to and/or proximal to the thrombus **2200**. In some embodiments, the use of the internal jugular access site **2500** can allow for a larger diameter of the elongate member **106**.

[0194] As seen in FIG. **27**, in some embodiments, use of the internal jugular access site **2500** can be combined with

use of the extension sheath **2300** that can be inserted into the blood vessel **2202** at a popliteal access site **2600**. In some such embodiments, the thrombus extraction device can wholly or partially exit the patient's body while contained in the extension sheath **2300** before being retracted through the thrombus **2200**.

[0195] As seen in FIG. **28**, the introducer sheath can, in some embodiments, be inserted into the patient's body into an access site connected to the blood vessel **2202** containing the thrombus via the common iliac veins. In the specific embodiment shown in FIG. **28**, this can be achieved via insertion into the patient's body via a femoral access site **2700**. In some embodiments, use of an access site connected to the blood vessel **2202** via the common iliac veins, and specifically user of the femoral access site **2700** can be combined with user of the extension sheath **2300** that can be inserted into the blood vessel **2202** at a popliteal access site **2600**. In some such embodiments, the thrombus extraction device can wholly or partially exit the patient's body while contained in the extension sheath **2300** before being retracted through the thrombus **2200**.

[0196] With reference now To FIG. **29**, a side view of another embodiment of the thrombus extraction device **202** is shown. The TED **202** shown in FIG. **29** can be used with other components of the thrombectomy system **100** shown and discussed above. The thrombus extraction device **202** can include the self-expanding coring element **206**, and the expandable cylindrical portion **208** that can be the braided filament mesh structure **704**. The self-expanding coring element **206**, which can include the mouth **414**, also referred to herein as the opening **414**, can be relatively more proximally located on the thrombus extraction catheter **104** than the expandable cylindrical portion **208**. The self-expanding coring element **206** can include a proximal end **210** connecting to a distal end **212** of the intermediate shaft **140** and a distal end **214** connecting to a proximal end **216** of the expandable cylindrical portion **208**.

[0197] The distal end **217** of the expandable cylindrical portion **208** can connect to one of: the second intermediate shaft **3000**, the third intermediate shaft **3002**; and the inner shaft **200**. In some embodiments, this connection can be to a distal end **218** of the one of: the second intermediate shaft **3000**, the third intermediate shaft **3002**; and the inner shaft **200**, and in some embodiments, this connection can be at a location intermediate between the proximal end and the distal end **218** of the one of: the second intermediate shaft **3000**, the third intermediate shaft **3002**; and the inner shaft **200**. In some embodiments, this connection can be a fixed connection and in some embodiments, this connection can be a slidable connection.

[0198] The expandable cylindrical portion **208** can include an everted portion **2900** and a non-everted portion **2902**. In some embodiments, the non-everted portion can be proximate to the proximal end **216** of the expandable cylindrical portion **208** and can connect to the self-expanding coring element **206**. The everted portion **2900** can, in some embodiments, extend proximally through the non-everted portion **2902** and/or through the self-expanding coring element **206**, and particularly through the mouth **414** of the self-expanding coring element **206**. The distal end **217** of the expandable cylindrical portion **208** can be moveable with respect to the self-expanding coring element **206** such that the relative size and/or length of the everted portion **2900** changes with respect to the size and/or length of the non-everted portion **2902**. In embodiments in which the distal end **217** of the expandable cylindrical portion **208** is fixed to one of: the second intermediate shaft **3000**, the third intermediate shaft **3002**; and the inner shaft **200**, the length of the everted portion **2900** relative to the non-everted portion **2902** varies based on the position of the first intermediate shaft **140** relative to the position of the one of: the second intermediate shaft **3000**, the third intermediate shaft **3002**; and the inner shaft **200** to which the self-expanding coring element **206** is connected.

[0199] The distal end **218** of the inner shaft **200** can further include a tip **220** such as an atraumatic tip and/or a radiopaque marker **222**. In some embodiments, the tip **220** can include the radiopaque marker **222**. Further radiopaque markers can be located on, for example, the outer shaft **138** and specifically the distal end **204** of the outer shaft **138** and/or the distal end **212** of the intermediate shaft **140**. In some embodiments, one or both of the distal end **204** of the outer shaft **138** and the distal end **212** of the intermediate shaft **140** can each comprise a radiopaque marker. In some embodiments, the atraumatic tip **220** can define a channel configured to allow the guidewire to pass through the atraumatic tip **220**.

[0200] With reference now to FIGS. **30** and **31**, side, section views of other embodiments of the thrombus extraction device **202** and portions of the thrombus extraction catheter **104** are shown. Specifically, FIG. **30** depicts an embodiment of the thrombus extraction device **202** in which the expandable cylindrical portion **208** everts on itself. As depicted, the everted portion **2900** of the expandable cylindrical portion **208** is everted such that the everted portion **2900** of the expandable cylindrical portion **208** extends through the non-everted portion **2902** and through the self-expanding coring element **206**, and specifically, the everted portion **2900** is everted such that the everted portion **2900** extends proximally through the non-everted portion **2902** and proximally through the self-expanding coring element **206**.

[0201] In FIG. **30**, the thrombus extraction device **202** includes the self-expanding coring element **206**, and the expandable cylindrical portion **208**. The self-expanding coring element **206** includes the mouth **414**. Further, the distal end **217** of the expandable cylindrical portion **208** connects to a distal end **3004** of the third intermediate shaft **3002** that coaxially extends through a lumen of the second intermediate shaft **3000**, which likewise coaxially extends through the first intermediate shaft **140**. As further seen, the thrombus extraction device **202** includes the inner shaft **200** including the atraumatic tip **220**. In one embodiment the inner shaft **200** is not coupled with the expandable cylindrical portion **208**, but rather is independently movable with respect to the expandable cylindrical portion **208**. In another embodiment, the inner shaft **200** is fixed to the proximal end of the expandable cylindrical portion **208** and can be manipulated to purposefully expand or retract the cylindrical portion **208**.

[0202] The second intermediate shaft **3000** includes a stop **702** that, with the ring **700** of the self-expanding coring element **206**, is part of the expansion mechanism **701**. In some embodiments, this stop **702** can be a tab, a protrusion, a flange, a ridge or the like. The expansion mechanism **701** can, with components discussed above with respect to FIGS. **12-14**, be configured to maintain a desired radial force on a vessel wall with the unitary fenestrated structure and/or to

hold the thrombus extraction device **202** and/or the self-expanding coring element **206** at full expansion and/or in full expansion.

[0203] In some embodiments, the stop **702** can directly engage with the ring **700** and in some embodiments, the stop **702** can be coupled with the ring **700** via, for example, a force transfer features such as spring which can be a compression spring or a tension spring. In some embodiments, for example, the stop **702** can be proximally located with respect to the ring **700** can the stop and the ring can be coupled by a tension spring such that a force is applied to the ring **700** via the spring when the stop **702** is in position for full expansion.

[0204] In some embodiments, the expandable cylindrical portion **208** can be coupled and/or connected to a distal end **218** of the one of: the second intermediate shaft **3000**, the third intermediate shaft **3002**; and the inner shaft **200**, and in some embodiments, the expandable cylindrical portion **208** can be coupled and/or connected to a distal end **218** of the one of: the second intermediate shaft **3000**, the third intermediate shaft **3002**; and the inner shaft **200** at a location intermediate between the proximal end and the distal end **218** of the one of: the second intermediate shaft **3000**, the third intermediate shaft **3002**; and the inner shaft **200**. In some embodiments, this connection can be a fixed connection and in some embodiments, this connection can be a slidable connection.

[0205] The expandable cylindrical portion **208** can include an everted portion **2900** and a non-everted portion **2902**. In some embodiments, the non-everted portion **2902** can be proximate to the proximal end **216** of the expandable cylindrical portion **208** and can connect to the self-expanding coring element **206**. The everted portion **2900** can, in some embodiments, extend proximally through the non-everted portion **2902** and/or through the self-expanding coring element **206**, and particularly through the mouth **414** of the self-expanding coring element **206**. The distal end **217** of the expandable cylindrical portion **208** can be moveable with respect to the self-expanding coring element **206** such that the relative size and/or length of the everted portion **2900** changes with respect to the size and/or length of the non-everted portion **2902**. In embodiments in which the distal end **217** of the expandable cylindrical portion **208** is fixed to one of: the second intermediate shaft **3000**, the third intermediate shaft **3002**; and the inner shaft **200**, the length of the everted portion **2900** relative to the non-everted portion **2902** varies based on the position of the first intermediate shaft **140** relative to the position of the one of: the second intermediate shaft **3000**, the third intermediate shaft **3002**; and the inner shaft **200** to which the self-expanding coring element **206** is connected.

[0206] The distal end **218** of the inner shaft **200** can further include a tip **220** such as an atraumatic tip and/or a radiopaque marker **222**. In some embodiments, the tip **220** can include the radiopaque marker **222**. Further radiopaque markers can be located on, for example, the outer shaft **138** and specifically the distal end **204** of the outer shaft **138** and/or the distal end **212** of the intermediate shaft **140**. In some embodiments, one or both of the distal end **204** of the outer shaft **138** and the distal end **212** of the intermediate shaft **140** can each comprise a radiopaque marker. In some embodiments, the atraumatic tip **220** can define a channel configured to allow the guidewire to pass through the atraumatic tip **220**.

[0207] In some embodiments, the thrombus extraction catheter **104** can include an eversion stop **3006**. The eversion stop **3006** can include one or several features that limit the proximal displacement of the distal end **217** of the expandable cylindrical portion **208** to prevent over-eversion of the TED **202**. In some embodiments, the eversion stop **3006** can be configured to limit proximal movement of the one of: the second intermediate shaft **3000**, the third intermediate shaft **3002**; and the inner shaft **200** to which the distal end **217** of the expandable cylindrical portion **208** is coupled. In some embodiments, this can prevent full eversion of the expandable cylindrical portion **208**.

[0208] The eversion stop **3006** can increase the effectiveness of the thrombus extraction device **202**. In some embodiments, for example, the eversion of the expandable cylindrical portion **208** on the self-expanding coring element **206** can result in the inability to distally advance the distal end **217** of the expandable cylindrical portion **208** to fully deploy the expandable cylindrical portion **208**.

[0209] FIG. **31** depicts and embodiment of the thrombus extraction device **202** in which the expandable cylindrical portion **208** everts on the self-expanding coring element **206**. As depicted in FIG. **31**, the everted portion **2900** of the expandable cylindrical portion **208** connects directly to the distal end **214** of the self-expanding coring element **206** and is everted such that the everted portion **2900** of the expandable cylindrical portion **208** extends through the self-expanding coring element **206**, and specifically, the everted portion **2900** is everted such that the everted portion **2900** extends proximally through the self-expanding coring element **206**. As further seen, the thrombus extraction device **202** includes the inner shaft **200** including the atraumatic tip **220**. The inner shaft **200** is coupled with the expandable cylindrical portion **208** via a coupling **3100**, which coupling **3100** can fixedly couple the distal end **217** of the expandable cylindrical portion **208** to the inner shaft **200** and/or which coupling **3100** can slidably couple the distal end **217** of the expandable cylindrical portion **208** to the inner shaft **200**. In some embodiments, the distal end **217** of the expandable cylindrical portion **208** can be similarly coupled to either the second intermediate shaft **3000** or the third intermediate shaft **3002**. In some embodiments in which the coupling **3100** fixedly couples the distal end **217** of the expandable cylindrical portion **208** to the inner shaft **200**, the relative length of the everted portion **2900** and the non-everted portion **2902** can be changed via the relative displacement of the inner shaft **200** with respect to the first intermediate shaft **140**. In embodiments in which the coupling **3100** slidably couples the distal end **217** of the expandable cylindrical portion **208** to the inner shaft **200**, the relative length of the everted portion **2900** and the non-everted portion **2902** can be changed via the application of a force to the expandable cylindrical portion **208** such as, for example, the force applied to the expandable cylindrical portion **208** by the portion of the thrombus when the thrombus extraction device **202** is retracted through the thrombus.

[0210] Although the embodiment of FIG. **31** depicts the expandable cylindrical portion **208** connected to the inner shaft **200**, the expandable cylindrical portion **208** can be coupled and/or connected to a distal end **218** of the one of: the second intermediate shaft **3000**, the third intermediate shaft **3002**; and the inner shaft **200**, and in some embodiments, the expandable cylindrical portion **208** can be coupled and/or connected to a distal end **218** of the one of:

the second intermediate shaft **3000**, the third intermediate shaft **3002**; and the inner shaft **200** at a location intermediate between the proximal end and the distal end **218** of the one of: the second intermediate shaft **3000**, the third intermediate shaft **3002**; and the inner shaft **200**.

[0211] With reference now to FIGS. **32** and **33**, an embodiment of the TED **202** is shown in which the relative sizes and/or lengths of the everted portion **2900** and the non-everted portion **2902** differ. Thus, relative length of the everted portion **2900** with respect to the non-everted portion **2902** is greater in FIG. **32** than in FIG. **33**. As depicted in FIGS. **32** and **33**, the relative length and/or size of the everted portion **2900** with respect to the non-everted portion **2902** is changed via the relative position of the inner shaft **200** with respect to the first intermediate shaft **140** as the inner shaft **200** is distally advanced with respect to the first intermediate shaft **140** in FIG. **33** as compared to FIG. **32** such that the inner shaft **200** distally extends from the first intermediate shaft **140** in FIG. **33**.

[0212] As further seen in FIG. **33**, the length of the everted portion **2900** extends from the most distal inflection point between the everted portion **2900** and the non-everted portion **2902** until the most distal end **217** of the expandable cylindrical portion **208**, which can include, for example, the coupling **3100**. In the embodiment of FIG. **32**, while the distal end **217** is within the first intermediate shaft **140**, and thus not visible, the everted portion **2900** nevertheless extends to this distal end **217** of the expandable cylindrical portion **208**. As further seen the everted portion **2900** extends from the most distal inflection point between the everted portion **2900** and the non-everted portion **2902** until the proximal end **216** of the expandable cylindrical portion **208**.

[0213] With reference now to FIGS. **34**-A to **34**-D views depicting one embodiment of a process for affecting the relative lengths of the everted portion **2900** and the non-everted portion **2902** of a thrombus extraction device in a blood vessel **2202** are shown. In some embodiments, the process of FIGS. **34**-A to **34**-D can be performed as a part of, or in the place of the process shown in FIGS. **23**-A to **23**-H, and particularly in the place of steps **23**-G and **23**-H. In some embodiments, the process of FIGS. **34**-A to **34**-D can be performed as a part of or in the place of the process of FIGS. **24**-A and **24**-B, or of FIGS. **25**-A to **25**-H. In some embodiments, for example, the process of FIGS. **34**-A to **34**-D can advantageously eliminate the necessity of performing the process of FIGS. **24**-A and **24**-B as the expandable cylindrical portion **208** of the thrombus extraction device **202** can be controlled to limit the extension of the thrombus extraction device **202** beyond the thrombus **2200**. This benefit of the process of FIGS. **34**-A to **34**-D is particularly advantageous when the thrombus **2200** forms proximate to a feature **3400** such as the valve **3400**.

[0214] The process for affecting the relative lengths of the everted portion **2900** and the non-everted portion **2902** in a blood vessel **2202** can be performed using all or portions of the thrombus extraction system **100**. In some embodiments, the process for affecting the relative lengths of the everted portion **2900** and the non-everted portion **2902** in a blood vessel **2202** can be performed in connection with a monitoring technique, such as fluoroscopy, angiography, and/or ultrasonic monitoring. In some embodiments, the monitoring technique can be used to monitor the deployment of the thrombus extraction device **202** in the vessel via observation of the one or several radiopaque markers located on the introducer sheath **102** and/or the thrombus extraction catheter **104**.

[0215] The process begins at FIG. **34**-A, wherein the thrombus **2200** is identified in the blood vessel **2202** such as venous vessel. In some embodiments, the thrombus **2200** can be located in the peripheral vasculature of the patient's body. The thrombus **2200** can comprise the proximal end **2204** and the distal end **2206**. In some embodiments, the identification of the blood vessel **2202** can further include the determination of whether the thrombus **2200** in the blood vessel **2202** is suitable for thrombus extraction. In some embodiments, the thrombus **2200** in the blood vessel **2202** can be suitable for extraction when the blood vessel **2202** has a diameter of at least 3 millimeters. In some embodiments, the thrombus **2200** in the blood vessel **2202** can be suitable for extraction when the blood vessel **2202** has a diameter of at least 3 millimeters and is at least one of a femoral vein, an iliac vein, a popliteal vein, a posterior tibial vein, an anterior tibial vein, or a peroneal vein. In some embodiments, and as part of identifying the thrombus **2200**, a feature **3400** can be identified, which feature **3400** can be located distal of the distal end **2206** of the thrombus **2200**.

[0216] After the thrombus **2200** has been identified, a guidewire **3402** can be inserted through the blood vessel **2202**, through the thrombus **2200**, and in some embodiments, through the feature **3400**. In some embodiments, the guidewire **3402** can be inserted into the blood vessel via an access site such as, for example, the internal jugular (IJ) access site, the femoral access site, the popliteal access site, or other venous or arterial access sites. In some embodiments, the guidewire **3402** can be inserted using one or several imaging and/or monitoring techniques including, for example, fluoroscopy, angiography, and/or ultrasonic monitoring.

[0217] After the thrombus **2200** has been identified, a portion of the thrombus extraction catheter **104** such as the outer shaft **138** can be inserted into the blood vessel **2202** as shown in FIG. **34**-B. In some embodiments, the thrombus extraction catheter **104** including the thrombus extraction device can be inserted into the blood vessel via an access site such as, for example, the internal jugular (IJ) access site, the femoral access site, the popliteal access site, or other venous or arterial access sites. In some embodiments, the thrombus extraction catheter **104** including the thrombus extraction device can be inserted into the popliteal access site and distally advanced, towards the feet of the patient. In some embodiments, the thrombus extraction device contained within the thrombus extraction catheter **104** can include the everted portion and the non-everted portion.

[0218] In some embodiments, the insertion of the thrombus extraction catheter **104** such as the outer shaft **138** can be inserted into the blood vessel **2202** can include performing the steps discussed above with respect to FIGS. **23**-B to **23**-D. In some embodiments, inserting a portion of the thrombus extraction catheter **104** into the blood vessel **2202** can include providing the thrombus extraction catheter **104** which comprises the thrombus extraction device **202**. In some embodiments, the thrombus extraction device **202** can be constrained within the outer shaft **138** and can inserted, together with the outer shaft **138**, into the blood vessel **2202** via, for example insertion into lumen of the elongate member **106** via the sealed aperture **112**. In some such embodiments, the outer shaft **138** of the thrombus extraction cath-

eter **104** can have a diameter so as to dilate the seal of the sealed aperture **112** such that the sealed aperture **112** seals around and seals to the outer shaft **138**.

[0219] After the portion of the thrombus extraction catheter **104** has been inserted into the blood vessel **2202**, a portion of the thrombus extraction catheter **104** can be distally advanced through the clot **2200** as depicted in FIG. **34**-B. In some embodiments, this distal advance through the clot **2200** can be either with or against the direction of blood flow. In some embodiments, the portion of the thrombus extraction catheter **104** distally advanced through the clot **2000** can contain and/or constrain the thrombus extraction device **202**. In some embodiments, distally advancing the portion of the thrombus extraction catheter **104** through the clot can include advancing the portion of the thrombus extraction catheter **104** until the tip **220** reaches a desired location proximate and/or proximal to the feature **3400**. In some embodiments, distally advancing the portion of the thrombus extraction catheter **104** through the clot can include advancing the portion of the thrombus extraction catheter **104** until the tip **220** reaches a desired location distal to the feature **3400**.

[0220] In some embodiments, this desired location can be intermediate between with the feature **3400** and the distal end **2206** of the thrombus **2200**. In some embodiments, the desired location can be sufficiently distal from the distal end **2206** of the thrombus to allow the deployment of the thrombus extraction device **202**, and particularly of the self-expanding coring element **206** between the distal end **2206** of the thrombus **2200** and the feature **3400**. In some embodiments, the desired location can be sufficiently distal from the distal end **2206** of the thrombus to allow the deployment of the thrombus extraction device **202**, and particularly of the self-expanding coring element **206** between the distal end **2206** of the thrombus **2200** and the feature **3400** without having all or a portion of the tip **220** or all or a portion of the thrombus extraction device **202** extend through the feature **3400**. In some embodiments such positioning that does not extend through the feature **3400** can protect the valve from potential damage arising from the insertion or retraction of the all or a portion of the tip **220** or all or a portion of the thrombus extraction device **202** through the feature **3400**.

[0221] In some embodiments, the insertion of the portion of the thrombus extraction catheter **104** into the blood vessel **2202** can be fluoroscopically monitored based on, for example, one or several radiopaque markers located in portions of the thrombus extraction catheter **104** including, for example, the radiopaque marker **222** and the radiopaque marker located at one or both of the distal end **204** of the outer sheath **138** and the distal end **212** of the intermediate sheath **140** such as radiopaque marker **2450**.

[0222] After the portion of the thrombus extraction catheter **104** is distally advanced to the desired location, the thrombus extraction device **202** can be deployed as depicted in FIG. **34**-C. In some embodiments, the thrombus extraction device **202** can be deployed by either advancing the thrombus extraction device **202** beyond the distal end **204** of the outer shaft **138** or by retracting the outer shaft **138** relative to the thrombus extraction device **202** until the thrombus extraction device **202** is beyond the distal end **204** of the outer shaft **138**. In some particular embodiments, the position of the tip **220** can be fixed and/or pinned at the desired location and the thrombus extraction device **202** can be deployed by the proximal retraction of the outer shaft **138** relative to the thrombus extraction device **202** until the self-expanding coring element **206** and any portion of the expandable cylindrical portion **208** extending distally from the self-expanding coring element **206** is beyond the distal end **204** of the outer shaft **138**. In some embodiments, the thrombus extraction device can be deployed such that the self-expanding coring element **206** is distally past the thrombus **2200** and/or distally past a desired portion of the thrombus **2200**.

[0223] In some embodiments, the thrombus extraction device **202** deployed when the lock feature **146** contacts the mating feature **148**. In such embodiments, the lock feature **146** can be mated and/or secured to the mating feature **148** to fix the relative position of the intermediate shaft **140** with respect to the outer shaft **138**.

[0224] In some embodiments, the deployment of the thrombus extraction device **202** can be monitored, and specifically, the deployment of the thrombus extraction device **202** can be fluoroscopically monitored via, for example, the radiopaque marker **222** and the radiopaque marker located at one or both of the distal end **204** of the outer sheath **138** and the distal end **212** of the intermediate sheath **140**. In some embodiments, the deployment of the thrombus extraction device **202**, and specifically the advancing of the thrombus extraction device **202** beyond the distal end **204** of the outer shaft **138** or retracting the outer shaft **138** relative to the thrombus extraction device **202** can be ceased based on a position the distal end **204** of the outer sheath **138** comprising the radiopaque marker (first radiopaque marker) relative to the radiopaque marker **222** located on the thrombus extraction device **202** (second radiopaque marker).

[0225] After the thrombus extraction device **202** is deployed, or as a part of that deployment, the thrombus extraction device **202** can be fully expanded. In some embodiments, this can include allowing the full expansion of the self-expanding coring element **206** such that the self-expanding coring element **206** engages a wall **2220** of the blood vessel **2202**. In some embodiments, the thrombus extraction device **202**, and specifically the self-expanding coring element **206** can be fully expanded by engaging the locking mechanism **701**, and in some embodiments by moving the plunger **154** from the first position to the second position and securing the plunger **154** in the second position to thereby fix the relative position of the stop **702** with respect to the ring feature **700**. In some embodiments, the movement of the plunger **154** from the first position to the second position proximally retracts the stop **702** with respect to the ring feature **700** to thereby fully expand the self-expanding coring element **206** of the thrombus extraction device **202**. The proximal retraction of the plunger **154** with respect to the intermediate shaft **140** can further bring the stop **702** into engagement with the ring feature **700** to thereby fully expand the self-expanding coring element **206**. In some embodiments, the securing of the plunger **154** in the second position can secure the self-expanding coring element **206** and the thrombus extraction device **202** in full expansion via the engagement of the stop **702** with the ring feature **700**.

[0226] After the thrombus extraction device **202** is deployed, the thrombus extraction device **202** can be fully expanded as shown in FIG. **23**-H. In some embodiments, this can include allowing the full expansion of the thrombus

extraction device **202** such that the thrombus extraction device **202** engages a wall **2220** of the blood vessel **2202**. In some embodiments, the thrombus extraction device **202** can be fully expanded by moving the plunger **154** from the first position to the second position and securing the plunger **154** in the second position to thereby fix the relative position of the inner shaft **200** with respect to the intermediate shaft **140**. In some embodiments, the movement of the plunger **154** from the first position to the second position proximally retracts the inner shaft **200** with respect to the intermediate shaft **140** to thereby fully expand the expandable cylindrical portion **208** of the thrombus extraction device **202**. The proximal retraction of the inner shaft **200** with respect to the intermediate shaft **140** can further bring the stop **702** into engagement with the ring feature **700** to thereby fully expand the self-expanding coring element **206**. In some embodiments, the securing of the plunger **154** in the second position can secure the self-expanding coring element **206** and the thrombus extraction device **202** in full expansion via the engagement of the stop **702** with the ring feature **700**.

[0227] After the thrombus extraction device **202** has been deployed, the thrombus **2200** can be removed via the capture of the thrombus in the thrombus extraction device **202** via the proximal retraction of the thrombus extraction device **202** through the thrombus **2200** as shown in FIG. **34**-D, which proximal retraction of the thrombus extraction device **202** can be, for example, in a direction of blood flow through the blood vessel **2202** or against the direction of blood flow through the vessel **2202**. In some embodiments, the proximal retraction of the thrombus extraction device **202** through the thrombus **2200** can result in the capture of the distal end **2206** of the thrombus **2200** before the capture of the proximal end **2204** of the thrombus **2200**.

[0228] In some embodiments, the proximal retraction of the thrombus extraction device **202** can result in the separation and/or coring of at least a portion of the thrombus **2200** from the wall **2220** of the blood vessel **2202** by, for example, the self-expanding coring element **206** and/or the stent portion, and the capture of that separated portion of the thrombus **2200** within the expandable cylindrical portion **208**. In some embodiments, the expandable cylindrical portion **208** can be formed of the braided filament mesh structure that can be, for example, a net-like filament mesh structure. In some embodiments, a portion of the thrombus can be captured within the expandable cylindrical portion **208** by entering the expandable cylindrical portion **208** via the mouth **414** of the self-expanding coring element **206** and/or via one or several of the interstices **404** of the self-expanding coring element **206**.

[0229] The distal end **2206** of the thrombus **2200** is separated and/or cored from the walls **2220** of the blood vessel **2202** by the self-expanding coring element **206** via the proximal retraction of the thrombus extraction device **202**, and the thrombus **2200** is captured in the expandable cylindrical portion **208** of the thrombus extraction device **202** by the continued proximal retraction of the thrombus extraction device through the thrombus **2200**. In some embodiments, the everted portion **2900** of the expandable cylindrical portion **208** can be distally advanced relative to and through the self-expanding coring element **206** and/or through the non-everted portion **2902** of the expandable cylindrical portion **208** in connection with the proximal retraction of the thrombus extraction device **202** to elongate the non-everted portion **2902** to allow capture of the thrombus **2200** in the expandable cylindrical portion **208** and particularly within the non-everted portion **2902** of the expandable cylindrical portion **208**. In embodiments in which the distal end **217** of the expandable cylindrical portion **208** is slidably coupled to one of: the second intermediate shaft **3000**, the third intermediate shaft **3002**; and the inner shaft **200**, the relative distal advance of the everted portion **2900** of the expandable cylindrical portion **208** can be achieved via forces applied to the expandable cylindrical portion **208** as the thrombus extraction device **202** is proximally retracted. In some embodiments, these forces can overcome frictional forces and can thus cause the coupling **3100** to displace distally relative to the one of: the second intermediate shaft **3000**, the third intermediate shaft **3002**; and the inner shaft **200** with which the coupling **3100** is coupled.

[0230] In some embodiments, this distal advance of the everted portion **2900** of the expandable cylindrical portion **208** relative to the self-expanding coring element **206** can be accomplished via the relative distal advance of the one of: the second intermediate shaft **3000**, the third intermediate shaft **3002**; and the inner shaft **200** with respect to the first intermediate shaft **140**. In some embodiments in which the distal end **217** of the expandable cylindrical portion **208** is fixedly coupled the one of: the second intermediate shaft **3000**, the third intermediate shaft **3002**; and the inner shaft **200**, the relative distal advance can be achieved by the fixing and/or pining of the position of that one of: the second intermediate shaft **3000**, the third intermediate shaft **3002**; and the inner shaft **200** and the proximal retraction of the first intermediate shaft **140**. In the embodiment of FIG. **34**-D in which the distal end **217** of the expandable cylindrical portion **208** is coupled to the second intermediate shaft **3000**, the position of the second intermediate shaft **3000** can be pinned relative to the blood vessel **2202**, the thrombus **2200** and/or the feature **3400**, and the first intermediate shaft **140** can be proximally retracted with respect to the second intermediate shaft **3000** to increase the length of the non-everted portion **2902**.

[0231] In some embodiments, the length of the non-everted portion **2902** of the expandable cylindrical portion **208** can be increased until the thrombus **2202** and/or portion of the thrombus **2202** is entirely captured with the thrombus extraction device **202** and specifically within the expandable cylindrical portion **208**, or until the length of the non-everted portion **2902** can no longer be increased. In some embodiments, the thrombus **2202** can then be removed from the patient's body as depicted in FIGS. **25**-E through **25**-H.

[0232] With reference now to FIG. **35** a schematic illustration of one embodiment of a funnel catheter **3500** is shown. The funnel catheter **3500** can be part of thrombus extraction system **100**. The funnel catheter **3500** comprises an elongate funnel member **3502**, also referred to herein as an elongate funnel sheath **3502** or the elongate sheath **3502**, having a proximal end **3504** and a distal end **3506**. The elongate funnel member **3502** can be elastic and/or flexible. The elongate funnel member **3502** can comprise any desired length and any desired diameter. In some embodiments, the elongate funnel member **3502** can have an outer diameter of at least 10 French, at least 12 French, at least 14 French, at least 18 French, at least 20 French, at least 22 French, between 14 French and 24 French, between 15 French and 21 French, between 16 French and 22 French, and/or any other or intermediate size.

[0233] The elongate funnel member **3502** can comprise a radiopaque marker that can be, for example, part of the distal end **110** of the elongate funnel member **3502**. The elongate funnel member **3502** defines a lumen extending between the proximal end **3504** and the distal end **3506**. The lumen of the elongate funnel member **3502** can be sized to slidably receive the thrombus extraction catheter **104**. In some embodiments, the lumen of the elongate member **106** can have an internal diameter of at least 2 French, at least 10 French, at least 14 French, at least 18 French, at least 20 French, at least 22 French, between 11 French and 12 French, between 10 French and 22 French, between 14 French and 21 French, between 16 French and 20 French, and/or any other or intermediate size. The lumen can terminate at a sealed aperture **3508**, also referred to herein as a sealed hub **3508**, located at the proximal end **3504** of the elongate funnel member **3502**. In some embodiments, the sealed aperture **3508** can be self-sealing and/or can comprise a self-sealing seal.

[0234] The elongate funnel member **3502** can further include an aspiration port **3510** that can be at the proximal end **3504** of the elongate funnel member **3502** and/or connected to the proximal end **3504** of the elongate funnel member **3502** via, for example, a connecting tube **3512**. In some embodiments, the aspiration port **3510** can be a part of, and/or connected to the sealed hub **3508**. In some embodiments, the aspiration port **3510** can be selectively fluidly connected to the lumen via, for example, a valve **3514**, also referred to herein as an aspiration valve **3514**, which valve **3514** can be a tubing clamp that can be located at a position along the connecting tube **3512** between the lumen and the aspiration port **3510**.

[0235] The elongate funnel member **3502** can further hold a dilator assembly **3516**. The dilator assembly **3516** can be configured to hold the self-expanding funnel **1708** that can be attached to the distal end **3506** of the elongate funnel member **3502** in a constrained configuration, and to release the self-expanding funnel **1708** from that constrained configuration. The dilator assembly **3516**, as shown in FIG. **36**, can comprise a proximal end **3518**, and a distal end **3520**. The dilator assembly **3516** can further include an obturator **3522** having a proximal end **3524**, a distal end **3526**, and an elongate shaft **3528** extending therebetween. In some embodiments, the dilator assembly **3526** can have a length that is greater than a length of the elongate funnel member **3502**, and in some embodiments, the elongate shaft **3528** can have a length that is greater than a length of the elongate member **3502** of the funnel catheter **3500**. The obturator **3522** can further define a lumen extending through the obturator **3522**, which lumen can receive a guidewire. In some embodiments, the guidewire can comprise any desired dimensions and can, in some embodiments, have a diameter of approximately 0.035 inches, a diameter of approximately 0.018 inches, a diameter of less than approximately 0.1 inches, and/or a diameter of less than approximately 0.05 inches. The dilator assembly **3516** can be sized and shaped so as to be able to slidably move through the lumen of the elongate member **3502**.

[0236] The obturator **3522** can include the capture sheath **1500** that can proximally extend from the distal end **3526** of the obturator **3522**, and the tip such as the atraumatic tip **1502** located at the distal end **3526** of the obturator **3522**. The atraumatic tip **1502** can be radiopaque. The obturator **120** can further include the connection fitting **1504** that can be located at the proximal end **1506** of the capture sheath **1500**. In some embodiments, the connection fitting **1504** can be configured to sealingly connect with the distal end **3506** of the elongate funnel member **3502** of the funnel catheter **3500**.

[0237] The obturator **3522** can further include a stop portion **1508** located at the proximal end **3524** of the obturator **3522**. In some embodiments, the stop portion **1508** can have a diameter larger than the lumen of the elongate funnel member **3502** of the funnel catheter **3500** and/or larger than the diameter of the sealed aperture **3508** so as to prevent the stop portion **1508** from entering into the lumen of the elongate funnel member **3502** and/or the sealed aperture **3508**.

[0238] The dilator assembly **3516** can further include an advancing sheath **3530**, also referred to herein as the moveable sheath **3530**, that can, in some embodiments, extend, coaxially along a portion of the elongate shaft **3528** of the obturator **3522** between, for example, the proximal end **3524** and the distal end **3526** of the obturator **3522**, and specifically between the stop portion **1508** and the proximal end **1506** of the capture sheath **1500**. The advancing sheath **3530** can include a proximal end **3532**, a distal end **3534**, and a tubular shaft **3536** extending between the proximal end **3532** and the distal end **3534** of the advancing sheath **3530**. The tubular shaft **3536** can define a lumen that can be sized to receive the obturator **3522** such that the advancing shaft **3530** is axially displaceable along the obturator **3533** from a loading position, as shown in FIG. **36**, to a retracting position, as shown in FIG. **37**. In some embodiments, the advancing sheath **3530** in the loading position is relatively more proximal with respect to the obturator **3522** than the advancing sheath **3530** in the retracting position.

[0239] The advancing sheath **3530** further comprises a stop **3538** located at the proximal end **3532** of the advancing sheath **3530**. The stop **3538** can interact with one or several features of the obturator **3522** to secure the advancing sheath **3530** to the obturator **3522** and secure the relative position of the advancing sheath **3530** with respect to the obturator **3522**. In some embodiments, for example, the stop **3538** can engage with a lock **3540** that can be, for example, connected to the stop portion **1508** of the obturator **3522**.

[0240] The advancing sheath **3530** can further comprise mating features **3542** that can be, for example, located on the distal end **3534** of the advancing sheath **3530**. The mating features **3542** can be sized, shaped, and configured to engage with the proximal end **1506** of the capture sheath **1500**, and specifically with the connection fitting **1504** of the capture sheath **1500**. In some embodiments, the mating features **3542** can be configured to sealingly connect with the connection fitting **1504** of the capture sheath. In some embodiments, the advancing sheath **3530** can have an outside diameter that is equal or approximately equal to an outside diameter of the capture sheath **1500**.

[0241] With reference to FIGS. **38**-A to **38**-D, a process for deploying the self-expanding funnel **1708** is shown. The process can include providing the dilator assembly **3516** and the funnel catheter **3500** with the funnel **1708** affixed to the distal end **3506** of the funnel catheter **3500**. In FIG. **38**-A, the funnel catheter **3500** including the elongate funnel member **3502** is shown. The dilator assembly **3516** including the obturator **3522** and the advancing sheath **3530** in the loading position such that the stop **3538** of the advancing sheath **3530** engages with and/or is engaged with the lock

3540 of the obturator **3522**. As seen in FIG. **38**-A, the funnel **1708** is contained in a constrained configuration within the capture sheath **1500**. When performed in a patient, the funnel catheter **3500** can be used to percutaneously access a venous vessel of a patient through, for example an access site that can be, for example, the popliteal access site, the femoral access site, or the internal jugular access site. In some embodiments, the funnel catheter can percutaneously access the venous vessel via an introducer sheath **102** inserted into the venous vessel at the access site. In some embodiments, percutaneously accessing the venous vessel via the introducer sheath can include inserting the funnel catheter **3500** into the venous vessel through the introducer sheath. The distal end **3506** of the funnel catheter **3500** can be advanced within the venous vessel to a position proximate to a thrombus, and in some embodiments, the distal end **3506** of the funnel catheter **3500** can be advanced within the venous vessel to a position proximal to a thrombus.

[0242] In FIG. **38**-B, the self-expanding funnel **1708** is deployed from the constrained configuration with the capture sheath **1500** to an expanded configuration free of the capture sheath **1500**. This can include distally advancing the capture sheath **1500** relative to the funnel catheter **3500** to unsheathe the self-expanding funnel **1708** from the constrained configuration to the unconstrained configuration. In some embodiments, distally advancing the capture sheath **1500** can include distally advancing the dilator assembly **3516** relative to the funnel catheter **3500**. In some embodiments, the deployment of the self-expanding funnel **1708** can include proximally retracting the elongate sheath **3502** over the obturator **3522** and/or the dilator assembly **3516** to unsheathe the self-expanding funnel **1708** from the constrained configuration to the expanded configuration.

[0243] After the self-expanding funnel **1708** has been deployed, and as depicted in FIG. **38**-C, the advancing shaft **3530** can be displaced from the loading position to the retracting position. In some embodiments, this displacement of the advancing shaft **3530** can occur via the proximal retraction of the obturator **3522** relative to the advancing shaft **3530**, and in some embodiments, this displacement of the advancing shaft **3530** can occur via the distal advance of the advancing shaft **3530** relative to the obturator **3522**. In some embodiments, the advancing shaft can be displaced from the loading position to the retracting position such that the mating features **3542** engage with the proximal end **1506** of the capture sheath **1500**, and specifically with the connection fitting **1504** of the capture sheath **1500**. In some embodiments, the positioning of the advancing sheath **3530** in the retracting position can prevent damage caused by the capture sheath **1500** or other components of the obturator **3522** during retraction of the obturator **3522** from the funnel catheter **3500**. Specifically, the positioning of the advancing sheath **3530** in the retracting position provides a constant diameter of portions of the dilator assembly **3516** that retract through the sealed hub **3508**.

[0244] After moving the advancing shaft **3530** to the retracting position, and as shown in FIG. **38**-D, the dilator assembly **3516** can be retracted from the funnel catheter **3500**. In some embodiments, the dilator assembly **3516** can be proximally retracted through the lumen of the funnel catheter **3500**, and out the sealed hub **3508** of the funnel catheter **3500**. In some embodiments in which the funnel catheter **3500** is used to access the venous vessel, the thrombus extraction catheter **104** constraining the TED **202** can be inserted into the venous vessel through the lumen of the elongate sheath **3502** of the funnel catheter **3500**. In some embodiments, the thrombus extraction catheter **104** can be inserted into the venous vessel and advanced through the venous vessel until a distal tip **132** of the thrombus extraction catheter **104** is proximate to the thrombus, and in some embodiments, until the distal tip **132** of the thrombus extraction catheter **104** is distally past the thrombus or a portion of the thrombus. The TED **202** can then be deployed and proximally retracted relative to the funnel catheter **3500** to separate thrombus from the walls of the venous vessel and to capture thrombus within the TED **202**. The TED **202** can be proximally retracted relative to the funnel catheter **3500** until an opening **414** of the thrombus extraction device **202** is within the self-expanding funnel **1708**. The thrombus extraction device **202** can then be retracted through the funnel catheter **3500**, or in some embodiments, the thrombus extraction device **202** can be maintained such that the opening **414** of the TED **202** remains in the funnel **1708** while the TED **202** and the funnel catheter **3500** are simultaneously withdrawn from the patient through the inserter sheath. In some embodiments, thrombus can be captured within the self-expanding funnel **1708**, and the thrombus can be aspirated out of the patient via the funnel catheter **3500**, and specifically via the lumen of the funnel catheter **3500**, the connecting tube **3512**, and the aspiration port **3510**.

[0245] With reference now to FIG. **39**, a top view of one embodiment of the thrombus extraction device **202** is shown. Specifically, FIG. **39** is a top view of one embodiment of the thrombus extraction device **202** with the expandable cylindrical portion **208** in an at least partially stacked configuration. The self-expanding coring element **206** is connected via the connection member **415** at the proximal end **210** of the self-expanding coring element **206** to the distal end **212** of the coring element shaft **140**. As seen in FIG. **39**, the coring element shaft **140**, which can include radiopaque marker **2450**, extends from the distal end **204** of the outer shaft **138**.

[0246] The proximal end **216** of the expandable cylindrical portion **208** connects to the distal end **214** of the self-expanding coring element **206**. In some embodiments, the expandable cylindrical portion **208** and specifically the proximal end **216** of the expandable cylindrical portion **208** is formed and/or woven on the distal end **214** of the self-expanding coring element **206** to thereby form a unitary thrombus extraction device **202**, also referred to herein as an interwoven thrombus extraction device **202**. The distal end **217** of the expanding cylindrical portion **208** connects to the distal end **218** of the tip shaft **200**.

[0247] In some embodiments, and as seen in FIG. **39**, the self-expanding coring element **206** can engage with all or portions of the stop shaft **3000** to affect the expansion of the self-expanding coring element **206**. Specifically, in some embodiments, the self-expanding coring element **206** can include one or several features that can together form the expansion mechanism. **701**, which expansion mechanism can include the ring **700** and the stop **702**. The ring **700** can, in some embodiments, be the same material as the self-expanding coring element **206** or can be a different material than the self-expanding coring element **206**. The ring **700** can be integrally formed with the self-expanding coring element **206** and/or can be attached to the self-expanding coring element via, for example, one or several welds, adhesive, one or several mechanical fasteners, or the like.

The ring **700** can have a diameter larger than the diameter of the stop shaft **3000** such that the ring **700** is slidable along the stop shaft **3000**, or in some embodiments, the ring **700** can have a diameter less than the diameter of the stop shaft **3000** such that the ring **700** is connected to the stop shaft **3000** via an interference fit that secures and/or partially secures the position of the ring **700** with respect to the stop shaft **3000**.

[0248] The stop **702** can comprise a variety of shapes and sizes and can be made from a variety of materials. In some embodiments, the stop **702** can comprise a polymeric member and/or metallic member that is affixed to a portion of the stop shaft **3000**. The stop **702** can, in some embodiments, have the form of a tab, a protrusion, a flange, a ridge or the like. In some embodiments, the stop **702** can be sized and shaped to engage with the ring **700** to thereby apply proximally directed force to the self-expanding coring element **206** when stop shaft **3000** is proximally displaced relative to the self-expanding coring element **206**. In some embodiments, the stop shaft **3000** can be displaced via, for example movement of the plunger **154** to the second position and/or displacement of the shuttle to a second position. In some embodiments, the shuttle can be attached to a spring, such as a constant force spring, which can cause this displacement of the shuttle. In some embodiments, at least the portion of the self-expanding coring element **206** located between the ring **700** and the connection member **415** can be forcibly expanded by the application of this proximally directed force to ring **700**, thereby moving the self-expanding coring member **206** to full expansion. In other embodiments, the engagement of the ring **700** and the stop **702** can connect the thrombus extraction device **202** to the spring, thereby bringing the TED **202** to full expansion. In another embodiment, the expansion mechanism **701** does not include the ring **700** and the stop **702** is not attached the stop shaft **3000**, rather, the expansion mechanism **701** comprises a wire or filament that can be, for example, a metallic or polymeric material. The wire or filament wraps through the self-expanding coring element **206** and can be attached such as fixedly attached to the stop shaft **3000**. In some embodiments, for example, the terminating end of the filament can be fixed to the stop shaft **3000** via a compression or tension spring, which spring allows the self-expanding coring element **206** to reduce in diameter slightly without disengaging the stop **702**. In some embodiments, the wire or filament is comprised of an elastic material to include the functionality of the compression or tension spring.

[0249] The expandable cylindrical portion **208** can comprise the braided filament mesh structure **704** that can be configured to capture thrombus. In some embodiments, the braided filament mesh structure can be coextensive with the expandable cylindrical portion **208** and thus can share a proximal end **216** and/or a distal end **217**. In the embodiment shown in FIG. **7**, the braided filament mesh structure **704** can be a braid of elastic filaments having a generally tubular, elongated portion **706** and a distal tapered portion **708**. In embodiments in which the expandable cylindrical portion **208** is at least partially stacked, the expandable cylindrical portion **208** can further include a proximal tapered portion **710**. In other embodiments, the braided filament mesh structure **704** can be any porous structure and/or can have other suitable shapes, sizes, and configurations (e.g., the distal portion **708** can be generally cylindrical, etc.).

[0250] In some embodiments, the tip shaft **200** is moveable relative to the coring element shaft **140** to thereby allow the changing of the length of the expandable cylindrical portion **208**. In some embodiments, and as discussed above, the change in the length of the expandable cylindrical portion **208** can result in the movement of the expandable cylindrical portion **208** between two or more of: a stacked configuration; an expanded configuration; and a collapsed configuration. In some embodiments, the change in the configuration of the expandable cylindrical portion **208** can result in a change of diameter of the expandable cylindrical portion **208**. Specifically, in some embodiments, the expandable cylindrical portion **208** can have a diameter in the stacked configuration that is greater than a diameter of the self-expanding coring element **206**. In some embodiments, the diameter of the expandable cylindrical portion **208** can be between 1 mm and 20 mm larger than the diameter of the self-expanding coring element **206**, can be between 2 mm and 10 mm larger than the diameter of the self-expanding coring element **206**, and/or can be between 2 mm and 6 mm larger than the diameter of the self-expanding coring element **206**.

[0251] With reference now to FIG. **40**, a section view of one embodiment of the handle **134** is shown. The handle **134** includes a distal end **142** and a proximal end **144**. The coring element shaft **140** connects to the distal end **142** of the handle **134** and distally extends away from the handle **134**. A lock feature **146** is located at the distal end **142** of the handle **134**. The lock feature **146** can be configured to engage with a component and/or portion of the outer shaft **138** to secure the outer shaft **138** to the handle **134**. In some embodiments, the outer shaft **138** can be proximally slid over the coring element shaft **140** and secured to the handle via the locking feature to deploy and/or partially deploy the thrombus extraction device **202**. The handle can further include the second flush port **156**. The second flush port **156** can be fluidly connected to an internal portion of the handle **134** and thereby connect to the lumen of the coring element shaft **140** so as to allow the flushing of the lumen of the coring element shaft **140**.

[0252] The handle **134** can include a housing **1200** that defines an internal volume **1202**. As seen in FIG. **40**, the stop shaft **3000** extends through the lumen of the coring element shaft **140** into the internal volume **1202** of the handle **134** and connects to, and/or is coupled to a shuttle **4000** that slides along a track **4002** within the housing **1200** of the handle **134**. The shuttle **4000** is moveable between a first position relatively more proximate to the distal end **142** of the handle **134** and a second position relatively more proximate to the proximal end **144** of the handle **134**. In some embodiments, the shuttle **4000** can be located in the first position when the self-expanding coring element **206** is in an undeployed configuration, and the shuttle **4000** can be located in the second position when the self-expanding coring element **206** is at full expansion. In some embodiments, the movement of the shuttle **4000** from the first position to the second position can move the thrombus extraction device **202**, and specifically the self-expanding coring element **206** to an expanded state, which expanded state can be full expansion.

[0253] The shuttle **4000** can be connected to and/or coupled to a force generation component such as, for example, a spring **4004**. The spring **4004** can comprise, for example, a compression spring, a tension spring, a torsion

spring, or a constant force spring such as a watch spring. In some embodiments, the spring **4004** can apply a force to the shuttle **400** to bias the thrombus extraction device **202**, and specifically the self-expanding coring element **206** to the expanded state and more specifically to hold the thrombus extraction device **202**, and specifically the self-expanding coring element **206** in full expansion.

[0254] As seen in FIG. **40**, the tip shaft **200** can extend into and/or through the handle **134**. In some embodiments, for example, the tip shaft **200**, and/or a feature connected to the tip shaft **200** such as a plunger, can extend through the handle **134**. In some embodiments, the extension of the tip shaft **200** and/or feature connected to the tip shaft **200** through the handle **134** can allow the control of the position of the tip shaft **200** with respect to one or more of the other shafts **138**, **140**, **3000**, **3002** and/or with respect to the handle **134** or the self-expanding coring element **206**. In some embodiments, this control of the relative position of the tip shaft **200** likewise controls the expandable cylindrical portion **208**, and specifically controls the braided filament mesh structure **704**. In some embodiments, this control can enable movement of the expandable cylindrical portion **208**, and specifically controls the braided filament mesh structure **704** between collapsed, expanded, and stacked configurations.

[0255] Due to the connection of the braided filament mesh structure **704** to the distal end **218** of the tip shaft **200**, axial movement of the tip shaft **200** radially expands/shortens or collapses/lengthens the braided filament mesh structure **704** of the TED **200**. For example, so long as the coring element shaft **140** is fixed and/or limited to axial movement at a rate less than that of the tip shaft **200**: (1) distal movement of the tip shaft **200** stretches the braided filament mesh structure **704** along its longitudinal axis such that the radius of the braided filament mesh structure **704** decreases and the length of the braided filament mesh structure **704** increases; and (2) proximal movement of the tip shaft **200** compresses the braided filament mesh structure **704** along its longitudinal axis such that the radius of the braided filament mesh structure **704** increases and the length of the braided filament mesh structure **704** decreases. The filament mesh structure **704** can be positioned in a plurality of configurations including, for example, a stacked configuration, a collapsed configuration, and an expanded configuration. The filament mesh structure **704** in the stacked configuration can have a shorter length than the filament mesh structure **704** in the expanded configuration, and the filament mesh structure **704** in the expanded configuration can have a shorter length the filament mesh structure **704** in the collapsed configuration. In certain embodiments, the braided filament mesh structure **704** can have any desired length in the collapsed configuration, including, for example, a length in the collapsed configuration between approximately 1 and 80 inches, between 2 and 60 inches, between 3 and 50 inches, between approximately 5 and 30 inches, between approximately 10 and 20 inches, and/or of approximately 16 inches, and in some embodiments, the braided filament mesh structure **704** can have a length in the expanded configuration of between approximately 1 and 25 inches, between approximately 10 and 20 inches, and/or of approximately 11 inches. In some embodiments, the filament mesh structure **704** can have any desired length in the stacked configuration including, for example, a length between 1 and 50 inches, a length between 1 and 30 inches, a length between 1 and 20 inches, a length of between 1 and 15 inches, between 2 and 10 inches, and/or of approximately 5 inches in the stacked configuration.

[0256] In some embodiments, the braid angles of the filament mesh structure **704** can change between configurations. As the length of the filament mesh structure **704** increases, the braid angle θ can decrease, and as the length of the filament mesh structure **704** decreases, the braid angle θ can increase. In some embodiments, the braid angle θ of the filament mesh structure **704** can be less than approximately 10°, less than approximate 20°, less than approximately 30°, less than approximately 40°, and/or less than approximately 50° when the filament mesh structure **704** is in the collapsed configuration. In some embodiments, the braid angle of the filament mesh structure **704** can be between 20° and 85°, between 30° and 70°, between 35° and 60°, between 40° and 50°, and/or approximately 45° when the filament mesh structure **704** is in the expanded configuration. In some embodiments, the braid angle of the filament mesh structure **704** can be greater than approximately 45°, greater than approximately 60°, greater than approximately 70°, and/or greater than approximately 80° when the filament mesh structure **704** is in the stacked configuration.

[0257] With reference now to FIGS. **41**-A to **41**-F, views depicting one embodiment of a process for expanding a stackable thrombus extraction device **202** in a blood vessel **2200** is shown. In some embodiments, the process of FIGS. **41**-A to **41**-F, can be performed as a part of, or in the place of the process shown in FIGS. **23**-A to **23**-H. In some embodiments, the portion of the process shown in FIGS. **41**-E and **41**-F can be performed in the place of steps **23**, and particularly in the place of steps **23**-G and **23**-H. In some embodiments, the process of FIGS. **41**-A to **41**-F can be performed as a part of or in the place of the process of FIGS. **24**-A and **24**-B, or of FIGS. **25**-A to **25**-H. In some embodiments, for example, the process of FIGS. **41**-A to **41**-F can advantageously eliminate the necessity of performing the process of FIGS. **24**-A and **24**-B as the expandable cylindrical portion **208** of the thrombus extraction device **202** can be controlled to limit the extension of the thrombus extraction device **202** beyond the thrombus **2200**. This benefit of the process of FIGS. **41**-A to **41**-F is particularly advantageous when the thrombus **2200** forms proximate to a feature **3400**.

[0258] The process for expanding a stackable thrombus extraction device **202** in a blood vessel **2200** can be performed using all or portions of the thrombus extraction system **100**. In some embodiments, the process expanding a stackable thrombus extraction device **202** in a blood vessel **2200** can be performed in connection with a monitoring technique, such as fluoroscopy, angiography, and/or ultrasonic monitoring. In some embodiments, the monitoring technique can be used to monitor the deployment of the thrombus extraction device **202** in the vessel via observation of the one or several radiopaque markers located on the introducer sheath **102** and/or the thrombus extraction catheter **104**.

[0259] The process begins at FIG. **41**-A, wherein the thrombus **2200** is identified in the blood vessel **2202** such as venous vessel. In some embodiments, the thrombus **2200** can be located in the peripheral vasculature of the patient's body. The thrombus **2200** can comprise the proximal end **2204** and the distal end **2206**. In some embodiments, the identification of the blood vessel **2202** can further include the determination of whether the thrombus **2200** in the blood

vessel **2202** is suitable for thrombus extraction. In some embodiments, the thrombus **2200** in the blood vessel **2202** can be suitable for extraction when the blood vessel **2202** has a diameter of at least 3 millimeters. In some embodiments, the thrombus **2200** in the blood vessel **2202** can be suitable for extraction when the blood vessel **2202** has a diameter of at least 3 millimeters and is at least one of a femoral vein, an iliac vein, a popliteal vein, a posterior tibial vein, an anterior tibial vein, or a peroneal vein. In some embodiments, and as part of identifying the thrombus **2200**, a feature **3400** can be identified, which feature **3400** can be located distal of the distal end **2206** of the thrombus **2200**.

[0260] After the thrombus **2200** has been identified, a guidewire **3402** can be inserted through the blood vessel **2202**, through the thrombus **2200**, and in some embodiments, through the feature **3400**. In some embodiments, the guidewire **3402** can be inserted into the blood vessel, as shown in FIG. **34**-A, via an access site such as, for example, the internal jugular (U) access site, the femoral access site, the popliteal access site, or other venous or arterial access sites. In some embodiments, the guidewire **3402** can be inserted using one or several imaging and/or monitoring techniques including, for example, fluoroscopy, angiography, and/or ultrasonic monitoring.

[0261] After the thrombus has been identified, and as shown in FIG. **41**-A, the introducer sheath **102** is advanced, either with or against the direction of blood flow in the blood vessel, such that the distal end **110** of the introducer sheath **102** and/or the obturator **120** is proximate to the thrombus **2200**, and particularly is proximate to the thrombus **2200** at a position proximal of the thrombus **2200**. In some embodiments, this can include providing the introducer sheath **102** which can include a dilator shaft **4100** extending through the lumen of the elongate member **106** of the introducer sheath **102**. In some embodiments, the dilator shaft **4100** can seal, or partially seal the lumen of the elongate member **106** at the distal end **110** of the introducer sheath **102**. In some embodiments, the introducer sheath **102** inserted in FIG. **41**-A can be used in connection with the funnel catheter **3500**. In some embodiments, such an introducer sheath **102** used with the funnel catheter **3500** can include a funnel **1708**, and in some embodiments, the introducer sheath **102** used with the funnel catheter **3500** does not include a funnel **1708**. The introducer sheath can percutaneously access the circulatory system of the patient and specifically the peripheral vasculature including, for example, an artery, and a blood vessel or venous vessel of the patient via an access site **2208** which can be one of the above referenced access sites.

[0262] After the introducer sheath **102** has been advanced to a desired position, the self-expanding funnel **1708** can be deployed and/or unsheathed from the constrained configuration to the expanded configuration as depicted in FIG. **41**-B. In some embodiments, this can include percutaneously accessing the venous vessel of the patient by inserting the funnel catheter **3500** into the venous vessel via the access site. In the embodiment of FIG. **41**-B, percutaneously accessing the venous vessel of the patient with the funnel catheter **3500** can include inserting the funnel catheter **3500** into the venous vessel through the introducer sheath. The distal end **3506** of the funnel catheter **3500** can be advanced within the venous vessel to a position proximate to a thrombus, and in some embodiments, the distal end **3506** of the funnel catheter **3500** can be advanced within the venous vessel to a position proximal to a thrombus. After the funnel catheter **3500** has reached the desired position, the funnel **1708** can be deployed as described with respect to FIGS. **38**-A to **38**-D.

[0263] After the self-expanding funnel **1708** has been deployed, a portion of the thrombus extraction catheter **104** such as the outer shaft **138** can be inserted into the lumen **1701** of the introducer sheath **102** via the sealed aperture **112**. In some embodiments, this can include providing the thrombus extraction catheter **104** which comprises the thrombus extraction device **202**. In some embodiments, the thrombus extraction device **202** can be constrained within the outer shaft **138** and can inserted, together with the outer shaft **138**, into the lumen of the elongate member **106** via the sealed aperture **112**. In some embodiments, the outer shaft **138** of the thrombus extraction catheter **104** can have a diameter so as to dilate the seal of the sealed aperture **112** such that the sealed aperture **112** seals around and seals to the outer shaft **138**.

[0264] After the outer shaft **138** has been inserted into the lumen **1701** of the introducer sheath **102**, a portion of the thrombus extraction catheter **104** can be inserted via the introducer sheath **102** into the blood vessel **2202**. In some embodiments, the distal end **132** of the thrombus extraction catheter **104** can be advanced to a position proximate to the thrombus **2200** and/or to a position proximal to the thrombus **2200**. In some embodiments, the insertion and/or advance of the thrombus extraction catheter **104** can be monitored and specifically can be fluoroscopically monitored. In some embodiments, the position of one or several radiopaque markers, including radiopaque marker **222** of the thrombus extraction catheter **104** can be monitored.

[0265] After the portion of the thrombus extraction catheter **104** has been inserted into the blood vessel **2202**, a portion of the thrombus extraction catheter **104** can be distally advanced through the clot **2200** as depicted in FIG. **41**-C. In some embodiments, this distal advance through the clot **2200** can be either with or against the direction of blood flow. In some embodiments, the portion of the thrombus extraction catheter **104** distally advanced through the clot **2000** can contain and/or constrain the thrombus extraction device **202**. In some embodiments, distally advancing the portion of the thrombus extraction catheter **104** through the clot can include advancing the portion of the thrombus extraction catheter **104** until the radiopaque marker **222**, that can be fluoroscopically monitored and that can be located at the distal end **218** of the tip shaft **200**, is distally past the thrombus **2200** and/or a portion of the thrombus **2200**.

[0266] After the portion of the thrombus extraction catheter **104** is distally advanced through the clot **2200**, the thrombus extraction device **202** can be partially deployed as depicted in FIG. **41**-D. In some embodiments, the thrombus extraction device **202** can be partially deployed by either advancing a portion of the thrombus extraction device **202** beyond the distal end **204** of the outer shaft **138** or by retracting the outer shaft **138** relative to the thrombus extraction device **202** until a portion of the thrombus extraction device **202** is beyond the distal end **204** of the outer shaft **138**. In some embodiments, the thrombus extraction device can be partially deployed such that a portion of the thrombus extraction device **202** is distally past the thrombus **2200** and/or distally past a desired portion of the thrombus **2200**.

[0267] In some embodiments, the portion of the thrombus extraction device **202** is advanced beyond the distal end **204**

of the outer shaft **138** by distally advancing the coring element shaft **140** with respect to the outer shaft **138**. In some embodiments, the coring element shaft **140** can be distally advanced until the lock feature **146** contacts the mating feature **148**, and the lock feature **146** can be mated and/or secured to the mating feature **148** to fix the relative position of the coring element shaft **140** with respect to the outer shaft **138**.

[0268] In some embodiments, the partial deployment of the thrombus extraction device **202** can be monitored, and specifically, the deployment of the thrombus extraction device **202** can be fluoroscopically monitored via, for example, the radiopaque marker **222** and the radiopaque marker located at one or both of the distal end **204** of the outer sheath **138** and the distal end **212** of the coring element sheath **140** such as, for example radiopaque marker **2450**. In some embodiments, the partial deployment of the thrombus extraction device **202**, and specifically the advancing of the thrombus extraction device **202** beyond the distal end **204** of the outer shaft **138** or retracting the outer shaft **138** relative to the thrombus extraction device **202** can be ceased based on a position the distal end **204** of the outer sheath **138** comprising the radiopaque marker (first radiopaque marker) relative to the radiopaque marker **222** located on the thrombus extraction device **202** (second radiopaque marker).

[0269] In some embodiments, the coring element shaft **140** and/or the tip shaft **200** can be manipulated so that a desired portion of the thrombus extraction device **202**, and specifically of the expandable cylindrical portion **208** of the thrombus extraction device **202** extends beyond the outer shaft **138**. In some embodiments, this can comprise any desired extension of the thrombus extraction device **202** beyond the outer shaft **138** including, for example, the extension of less than approximately 20 inches of the thrombus extraction device **202** beyond the outer shaft **138**, the extension of less than approximately 16 inches of the thrombus extraction device **202** beyond the outer shaft **138**, the extension of less than approximately 10 inches of the thrombus extraction device **202** beyond the outer shaft **138**, the extension of less than approximately 5 inches of the thrombus extraction device **202** beyond the outer shaft **138**, the extension of less than approximately 2 inches of the thrombus extraction device **202** beyond the outer shaft **138**, or the extension of less than approximately 2 inches of the thrombus extraction device **202** beyond the outer shaft **138**.

[0270] In some embodiments, the thrombus extraction device **202** can be partially deployed until the thrombus extraction device **202**, and specifically until the distal end **217** of the cylindrical portion **208** of the thrombus extraction device **202** reaches a desired position, such as, for example, a desired position with respect to a feature **3400** of the blood vessel **2202** or with respect to an anatomical structure such as, for example, valve. In some embodiments, this feature **3400** of the blood vessel can comprise a transition, such as a branch point, from one blood vessel to another, a desired diameter of the blood vessel, or the like. In some embodiments, the thrombus extraction device **202** can be deployed until the distal end **217** of the cylindrical portion **208** of the thrombus extraction device **202** reaches a desired point beyond a branch point of a vessel such that the cylindrical portion **208** is wholly or partially contained in a different blood vessel, or a blood vessel having a larger diameter than the remaining portions of the thrombus extraction device **202**. In some embodiments, when the distal end **217** of the cylindrical portion **208** of the thrombus extraction device **202** reaches this desired position, the tip shaft **200** can be pinned and the position of the distal end **217** of the cylindrical portion **208** of the thrombus extraction device **202** can be maintained.

[0271] After the thrombus extraction device **202** is partially deployed, a portion of the thrombus extraction device **202** can be stacked. Specifically, in some embodiments, the deployed portion of the thrombus extraction device can include all or portions of the cylindrical portion **208** of the thrombus extraction device **202**, and specifically of the filament mesh structure **704**. In some embodiments, the deployed portions of the cylindrical portion **208** of the thrombus extraction device **202**, and specifically of the filament mesh structure **704** can be stacked, or partially stacked as depicted in FIG. **41**-E. In some embodiments, this stacking can be achieved by relatively distally advancing the coring element shaft **140** with respect to the tip shaft **200**, which can change the braid angle θ, decrease the length of the cylindrical portion **208** of the thrombus extraction device **202**, and specifically of the filament mesh structure **704**, and increase the diameter of the cylindrical portion **208** of the thrombus extraction device **202**, and specifically of the filament mesh structure **704**. In some embodiments, this stacking can occur while the tip shaft **200** is pinned and/or while the position of the distal end **217** of the cylindrical portion **208** of the thrombus extraction device **202** is maintained at a desired location.

[0272] The deployment of the thrombus extraction device **202** can be continued until the thrombus extraction device **202** is deployed from the outer shaft **138** as shown in FIG. **41**-F. In some embodiments, this can be achieved vie the continued distal advancement of the coring element shaft **140** which can be, in some embodiments, a relative distal advancement with respect to the tip shaft **200** and/or the outer shaft **138**. In some embodiments, this continued deployment of the thrombus extraction device **202** can cause the continued stacking of portions of the cylindrical portion **208** of the thrombus extraction device **202**, and specifically of the filament mesh structure **704**.

[0273] With reference now to FIGS. **42**-A and **42**-B, views depicting one embodiment of a process for retracting stackable thrombus extraction device **202** through thrombus in a blood vessel **2200** is shown. The process of FIGS. **42**-A and **42**-B, can be performed as a part of, or in the place of the process shown in FIGS. **25**-A to **25**-H.

[0274] After the thrombus extraction device **202** is deployed, or as part of the deployment of the thrombus extraction device **202**, the thrombus extraction device **202** can be fully expanded. In some embodiments, this can include allowing the full expansion of the thrombus extraction device **202** such that the thrombus extraction device **202** engages a wall **2220** of the blood vessel **2202**. In some embodiments, the thrombus extraction device **202** can be fully expanded by moving the plunger **154** from the first position to the second position and securing the plunger **154** in the second position to thereby fix the relative position of the stop shaft **3000** with respect to the coring element shaft **140**. In some embodiments, the movement of the plunger **154** from the first position to the second position proximally retracts the stop shaft **3000** with respect to the coring element shaft **140** to thereby fully expand the expandable cylindrical portion **208** of the thrombus extraction device **202**. The proximal retraction of the stop shaft **3000** with

respect to the coring element shaft **140** can further bring the stop **702** into engagement with the ring feature **700** to thereby fully expand the self-expanding coring element **206**. In some embodiments, the securing of the plunger **154** in the second position can secure the self-expanding coring element **206** and the thrombus extraction device **202** in full expansion via the engagement of the stop **702** with the ring feature **700**.

[0275] In some embodiments, the thrombus extraction device can be fully expanded by the movement of the shuttle **4000** from the first position to the second position. In some embodiments, the shuttle **4000** can be moved along the track **4002** by the spring **4004** to thereby move the stop shaft **3000** with respect to the self-expanding coring element **206**. In some embodiments, this movement of the stop shaft **3000** can bring the stop **702** into engagement with the ring feature **700** to thereby fully expand the self-expanding coring element **206**. In some embodiments, the spring **4004** can secure the self-expanding coring element **206** and the thrombus extraction device **202** in full expansion via the engagement of the stop **702** with the ring feature **700**. In some embodiments, the shuttle **4000** moves from the first position to the second position until compressive forces applied to the self-expanding coring element **206** equal the expansive forces of the self-expanding coring element **206** and of the spring **4004**. In some embodiments, these compressive forces equal the expansive forces when the self-expanding coring element **206** engages the wall **2220** of the blood vessel **2202**.

[0276] After the thrombus extraction device **202** is at full expansion, the thrombus extraction device **202** can be proximally retracted through the thrombus **2200** as shown in FIG. **42**-B. In some embodiments, the proximal retraction of the thrombus extraction device **202** can be, for example, in a direction of blood flow through the blood vessel **2202** or against the direction of blood flow through the vessel **2202**. In some embodiments, the proximal retraction of the thrombus extraction device **202** through the thrombus **2200** can result in the capture of the distal end **2206** of the thrombus **2200** before the capture of the proximal end **2204** of the thrombus **2200**.

[0277] In some embodiments, the proximal retraction of the thrombus extraction device **202** can result in the separation and/or coring of at least a portion of the thrombus **2200** from the wall **2220** of the blood vessel **2202** by, for example, the self-expanding coring element **206** and/or the stent portion, and the capture of that separated portion of the thrombus **2200** within the expandable cylindrical portion **208**. In some embodiments, the expandable cylindrical portion **208** can be formed of the braided filament mesh structure that can be, for example, a net-like filament mesh structure. In some embodiments, a portion of the thrombus can be captured within the expandable cylindrical portion **208** by entering the expandable cylindrical portion **208** via the mouth **414** of the self-expanding coring element **206** and/or via one or several of the interstices **404** of the self-expanding coring element **206**.

[0278] The distal end **2206** of the thrombus **2200** is separated and/or cored from the walls **2220** of the blood vessel **2202** by the self-expanding coring element **206** via the proximal retraction of the thrombus extraction device **202**, and the thrombus **2200** is captured in the expandable cylindrical portion **208** of the thrombus extraction device **202** by the continued proximal retraction of the thrombus extraction device through the thrombus **2200**. In some embodiments, the expandable cylindrical portion **208** can unstack during the proximal retraction of the thrombus extraction device **202**. In some embodiments, this unstacking can be accomplished by proximally retracting the coring element shaft **140** with respect to the tip shaft **200**. In some embodiments, this can be achieved by merely retracting the coring element shaft **140** and allowing drag caused by the thrombus entering the expandable cylindrical portion **208** to prevent the tip shaft **200** to moving simultaneous with and/or to the same degree as the coring element shaft **140**. In some embodiments, this unstacking can be achieved by maintaining the pinning of the tip shaft **200** while retracting the coring element shaft with respect to the tip shaft **200**.

[0279] The thrombus extraction device **202** can be unstacked until the entire thrombus extraction device **202** is unstacked or until a desired level of unstacking is achieved. The thrombus extraction device **202** can then be retracted via the proximal retraction of the thrombus extraction catheter **104**, the outer shaft **138**, and/or the coring element shaft **140**. In some embodiments, the thrombus extraction device **202** can be retracted until all or a portion of the thrombus extraction device **202** is within the funnel catheter **3500**, and specifically within the funnel **1708**. In some embodiments, for example, the thrombus extraction device can be retracted until the self-expanding coring element **206** is within the funnel **1708** and/or until the mouth **414** is within the funnel. In some embodiments, the containment of the mouth **414** within the self-expanding funnel **1708** can be fluoroscopically verified. In some embodiments, the mouth **414** can be determined as wholly contained within the self-expanding funnel **1708** via fluoroscopic monitoring based on the alignment/relative positioning of the distal end **212** of the intermediate shaft **140** comprising a radiopaque marker **2450** and/or the radiopaque marker **222** with respect to the distal end **110** comprising a radiopaque marker **2452** of the elongate member **106** of the introducer sheath **102**.

[0280] After the mouth **414** of the thrombus extraction device **202** is within the funnel **1708**, the position of the thrombus extraction device **202** can be maintained such that the mouth **414** of the thrombus extraction device **202** remains in the funnel **1708** while the thrombus extraction device **202** and the funnel catheter **3500** are simultaneously withdrawn from the patient through the inserter sheath **102**. In some embodiments, thrombus can be captured within the self-expanding funnel **1708**, and the thrombus can be aspirated out of the patient via the funnel catheter **3500**, and specifically via the lumen of the funnel catheter **3500**, the connecting tube **3512**, and the aspiration port **3510**.

[0281] Other variations are within the spirit of the present invention. Thus, while the invention is susceptible to various modifications and alternative constructions, certain illustrated embodiments thereof are shown in the drawings and have been described above in detail. It should be understood, however, that there is no intention to limit the invention to the specific form or forms disclosed, but on the contrary, the intention is to cover all modifications, alternative constructions, and equivalents falling within the spirit and scope of the invention, as defined in the appended claims.

[0282] In the previous description, various embodiments of the present invention are described. For purposes of explanation, specific configurations and details are set forth in order to provide a thorough understanding of the embodiments. However, it will also be apparent to one skilled in the

art that the present invention may be practiced without the specific details. Furthermore, well-known features may be omitted or simplified in order not to obscure the embodiment being described.

[0283] The use of the terms "a" and "an" and "the" and similar referents in the context of describing the invention (especially in the context of the following claims) are to be construed to cover both the singular and the plural, unless otherwise indicated herein or clearly contradicted by context. The terms "comprising," "having," "including," and "containing" are to be construed as open-ended terms (i.e., meaning "including, but not limited to,") unless otherwise noted. The term "connected" is to be construed as partly or wholly contained within, attached to, or joined together, even if there is something intervening. Recitation of ranges of values herein are merely intended to serve as a shorthand method of referring individually to each separate value falling within the range, unless otherwise indicated herein, and each separate value is incorporated into the specification as if it were individually recited herein. All methods described herein can be performed in any suitable order unless otherwise indicated herein or otherwise clearly contradicted by context. The use of any and all examples, or exemplary language (e.g., "such as") provided herein, is intended merely to better illuminate embodiments of the invention and does not pose a limitation on the scope of the invention unless otherwise claimed. No language in the specification should be construed as indicating any non-claimed element as essential to the practice of the invention.

[0284] Preferred embodiments of this invention are described herein, including the best mode known to the inventors for carrying out the invention. Variations of those preferred embodiments may become apparent to those of ordinary skill in the art upon reading the foregoing description. The inventors expect skilled artisans to employ such variations as appropriate, and the inventors intend for the invention to be practiced otherwise than as specifically described herein. Accordingly, this invention includes all modifications and equivalents of the subject matter recited in the claims appended hereto as permitted by applicable law. Moreover, any combination of the above-described elements in all possible variations thereof is encompassed by the invention unless otherwise indicated herein or otherwise clearly contradicted by context.

[0285] All references, including publications, patent applications, and patents, cited herein are hereby incorporated by reference to the same extent as if each reference were individually and specifically indicated to be incorporated by reference and were set forth in its entirety herein.

1. A method for removal of thrombus from a blood vessel in a body of a patient, the method comprising;

providing a thrombus extraction device comprising a proximal self-expanding member formed of a fenestrated structure, and a substantially cylindrical portion formed of a net-like filament mesh structure having a proximal end coupled to a distal end of the fenestrated structure;

advancing a catheter constraining the thrombus extraction device through a vascular thrombus,

deploying the thrombus extraction device by stacking a portion of the net-like filament mesh structure outside of the catheter by distally advancing the self-expanding member until the self-expanding member is beyond a distal end of the catheter;

retracting the self-expanding member relative to the distal end of the net-like filament mesh structure to unstack the portion of the net-like filament mesh structure and to separate a portion of the thrombus from the vessel wall and to capture the portion of the thrombus within the net-like filament mesh structure; and

withdrawing the thrombus extraction device from the body to remove thrombus from the patient.

2. The method of claim **1**, wherein advancing the catheter through the vascular thrombus comprises inserting the catheter into the blood vessel until a radiopaque distal tip of the catheter is past the thrombus portion.

3. The method of claim **1**, wherein stacking the portion of the net-like filament mesh structure comprises: fixing a position of the distal end of the net-like filament mesh structure; and distally advancing the self-expanding member relative to the distal end of the net-like filament mesh structure.

4. The method of claim **3**, wherein the position of the distal end of the net-like filament mesh structure is fixed proximal relative to a valve in the body of the patient.

5. The method of claim **4**, wherein the valve is located in the blood vessel containing the thrombus.

6. The method of claim **4**, wherein the position of the distal end of the net-like filament mesh structure is fixed in a second blood vessel, wherein the second blood vessel is connected to the blood vessel containing the thrombus.

7. The method of claim **3**, wherein stacking the portion of the net-like filament mesh structure comprises changing a braid angle of portion of the net-like filament mesh structure.

8. The method of claim **7**, wherein the braid angle of the portion of the net-like filament mesh structure is greater than 45° when stacked.

9. The method of claim **1**, wherein a diameter of the portion of the net-like filament mesh structure is greater than a diameter of the fenestrated structure.

10. The method of claim **1**, wherein the catheter is inserted into the blood vessel through a popliteal access site and the catheter is distally advanced from the popliteal access site.

11. The method of claim **1**, wherein the net-like filament mesh structure is interwoven on the fenestrated structure.

12. The method of claim **1**, further comprising moving the fenestrated structure to full expansion.

13. The method of claim **12**, wherein moving the fenestrated structure to full expansion comprises retracting a stop shaft relative to the fenestrated structure.

14. The method of claim **13**, wherein the stop shaft is retracted relative to the fenestrated structure via movement of a plunger from a first position to a second position.

15. The method of claim **13**, wherein the stop shaft is retracted relative to the fenestrated structure via movement of a shuttle from a first position to a second position, wherein the shuttle is moved from a first position to a second position via a force applied to the shuttle by a spring.

16. The method of claim **1**, wherein advancing the catheter through the vascular thrombus comprises inserting the catheter into the blood vessel through a funnel catheter comprising: an elongate sheath; and a self-expanding funnel coupled to a distal end of the elongate sheath.

17. The method of claim **16**, withdrawing the thrombus extraction device from the body to remove thrombus from the patient comprises retracting the thrombus extraction

device until at least a portion of the self-expanding member is contained within the self-expanding funnel.

18. The method of claim **16**, wherein the at least a portion of the self-expanding member contained within the self-expanding funnel comprises an opening of the self-expanding member.

19. The method of claim **18**, further comprising simultaneously proximally retracting the thrombus extraction device and the funnel catheter from the patient.

20. The method of claim **19**, wherein the opening of the thrombus extraction device is maintained within the self-expanding funnel during the simultaneous proximal retraction of the thrombus extraction device and the funnel catheter from the patient.

21-75. (canceled)

76. A method for removal of thrombus from a blood vessel in a body of a patient, the method comprising;

advancing a catheter constraining a thrombus extraction device through a vascular thrombus, the thrombus extraction device comprising a proximal self-expanding member formed of a fenestrated structure, and a substantially cylindrical portion formed of a net-like filament mesh structure having a proximal end coupled to a distal end of the fenestrated structure,

deploying the thrombus extraction device by distally advancing the self-expanding member with respect to the catheter until the self-expanding member is beyond a distal end of the catheter, wherein deploying the thrombus extraction device comprises stacking a portion of the net-like filament mesh structure, wherein stacking a portion of the net-like filament mesh structure comprises:

fixing a position of the distal end of the net-like filament mesh structure; and

distally advancing the self-expanding member relative to the distal end of the net-like filament mesh structure;

retracting the self-expanding member relative to a distal end of the net-like filament mesh structure to increase a distal length of the net-like filament mesh structure and to separate a portion of the thrombus from the vessel wall and to capture the portion of the thrombus within the net-like filament mesh structure; and

withdrawing the thrombus extraction device from the body to remove thrombus from the patient.

77. The method of claim **76**, wherein advancing the catheter through the vascular thrombus comprises inserting the catheter into the blood vessel until a radiopaque distal tip of the catheter is past the thrombus portion.

78. (canceled)

79. The method of claim **76**, wherein stacking a portion of the net-like filament mesh structure comprises changing a braid angle of portion of the net-like filament mesh structure.

80. The method of claim **79**, wherein the braid angle of the portion of the net-like filament mesh structure is greater than 45° when stacked.

81. The method of claim **76**, wherein a diameter of the portion of the net-like filament mesh structure is greater than a diameter of the fenestrated structure.

82. The method of claim **76**, wherein the catheter is inserted into the blood vessel through a popliteal access site and the catheter is distally advanced from the popliteal access site.

83. A method for removal of thrombus from a blood vessel in a body of a patient, the method comprising;

advancing a catheter constraining a thrombus extraction device through a vascular thrombus, the thrombus extraction device comprising a proximal self-expanding member formed of a fenestrated structure, and a substantially cylindrical portion formed of a net-like filament mesh structure having a proximal end coupled to a distal end of the fenestrated structure, wherein the net-like filament mesh structure is interwoven on the fenestrated structure,

deploying the thrombus extraction device by distally advancing the self-expanding member with respect to the catheter until the self-expanding member is beyond a distal end of the catheter;

retracting the self-expanding member relative to a distal end of the net-like filament mesh structure to increase a distal length of the net-like filament mesh structure and to separate a portion of the thrombus from the vessel wall and to capture the portion of the thrombus within the net-like filament mesh structure; and

withdrawing the thrombus extraction device from the body to remove thrombus from the patient.

84. The method of claim **76**, further comprising moving the fenestrated structure to full expansion.

85. A method for removal of thrombus from a blood vessel in a body of a patient, the method comprising;

advancing a catheter constraining a thrombus extraction device through a vascular thrombus, the thrombus extraction device comprising a proximal self-expanding member formed of a fenestrated structure, and a substantially cylindrical portion formed of a net-like filament mesh structure having a proximal end coupled to a distal end of the fenestrated structure, wherein advancing the catheter through the vascular thrombus comprises inserting the catheter into the blood vessel through a funnel catheter comprising: an elongate sheath; and a self-expanding funnel coupled to a distal end of the elongate sheath,

deploying the thrombus extraction device by distally advancing the self-expanding member with respect to the catheter until the self-expanding member is beyond a distal end of the catheter;

retracting the self-expanding member relative to a distal end of the net-like filament mesh structure to increase a distal length of the net-like filament mesh structure and to separate a portion of the thrombus from the vessel wall and to capture the portion of the thrombus within the net-like filament mesh structure; and

withdrawing the thrombus extraction device from the body to remove thrombus from the patient.

* * * * *