US011697011B2

(12) **United States Patent**
Merritt et al.

(10) **Patent No.: US 11,697,011 B2**
(45) **Date of Patent: Jul. 11, 2023**

(54) **HEMOSTASIS VALVES AND METHODS OF USE**

(71) Applicant: **Inari Medical, Inc.**, Irvine, CA (US)

(72) Inventors: **Benjamin E. Merritt**, San Clemente, CA (US); **John C. Thress**, Capistrano Beach, CA (US); **Paul Lubock**, Monarch Beach, CA (US)

(73) Assignee: **Inari Medical, Inc.**, Irvine, CA (US)

(*) Notice: Subject to any disclaimer, the term of this patent is extended or adjusted under 35 U.S.C. 154(b) by 0 days.

(21) Appl. No.: **17/705,189**

(22) Filed: **Mar. 25, 2022**

(65) **Prior Publication Data**

US 2022/0211992 A1 Jul. 7, 2022

Related U.S. Application Data

(63) Continuation of application No. 17/226,318, filed on Apr. 9, 2021, which is a continuation of application (Continued)

(51) **Int. Cl.**
A61M 39/06 (2006.01)
A61B 17/3207 (2006.01)

(52) **U.S. Cl.**
CPC ***A61M 39/0613*** (2013.01); *A61B 17/3207* (2013.01); *A61M 2039/062* (2013.01); *A61M 2039/0673* (2013.01)

(58) **Field of Classification Search**
CPC A61M 2039/062; A61M 2039/0673; A61M 39/0613; F16K 7/02; F16K 7/08; F16K 7/04
See application file for complete search history.

(56) **References Cited**

U.S. PATENT DOCUMENTS

2,846,179 A 8/1958 Monckton
2,955,592 A 10/1960 Maclean
(Continued)

FOREIGN PATENT DOCUMENTS

AU 2015210338 8/2015
CN 102186427 9/2011
(Continued)

OTHER PUBLICATIONS

European Patent Application No. 13838945.7, Extended European Search Report, 9 pages, dated Apr. 15, 2016.
(Continued)

Primary Examiner — Quynh-Nhu H. Vu
(74) *Attorney, Agent, or Firm* — Perkins Coie LLP

(57) **ABSTRACT**

Devices, systems, and methods for sealing medical devices, particularly during intravascular access, are disclosed herein. Some aspects relate to a hemostatic valve for sealing a wide range of medical devices, such as catheters, wires, embolectomy systems. The valve can include an elongate member having a first end, a second end, and a central lumen extending therebetween. A reinforcement structure extends along at least a portion of the elongate member and is coupled to the elongate member. A shell defining a first aperture and a second aperture may be included, which first and second apertures can be fluidly coupled by the elongate member. A tensioning mechanism is coupled to the shell and to the elongate member, the tensioning mechanism can be moveable between a first configuration wherein the tensioning mechanism is collapsed and the central lumen is sealed and a second configuration wherein the central lumen is open.

9 Claims, 10 Drawing Sheets

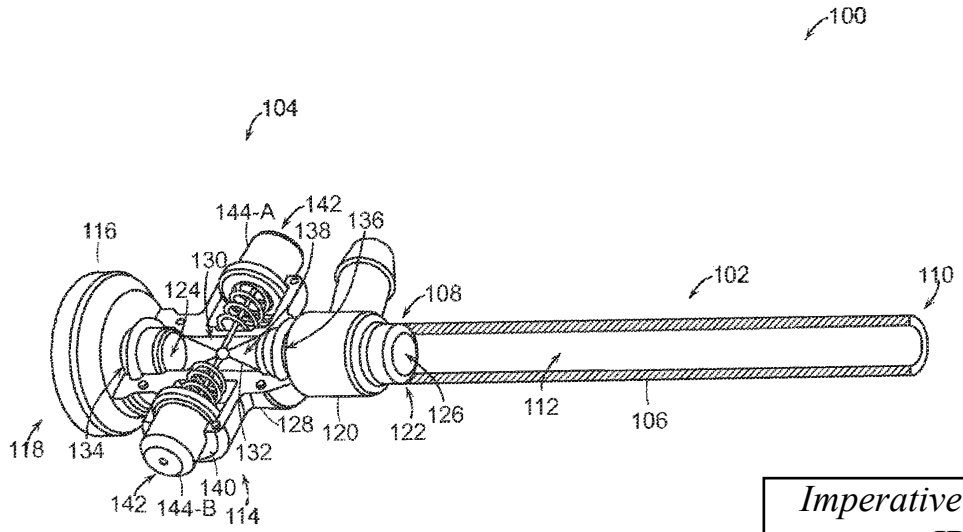

Imperative Care v. Inari Medical
IPR2025-00156
Imperative Care Ex. 1022

Related U.S. Application Data

No. 16/117,519, filed on Aug. 30, 2018, now Pat. No. 11,000,682.

(60) Provisional application No. 62/554,931, filed on Sep. 6, 2017.

(56) **References Cited**

U.S. PATENT DOCUMENTS

3,088,363	A	5/1963	Sparks	
3,197,173	A	7/1965	Taubenheim	
3,435,826	A	4/1969	Fogarty	
3,515,137	A	6/1970	Santomieri	
3,675,657	A *	7/1972	Gauthier	A61B 17/132 606/203
3,892,161	A	7/1975	Sokol	
3,923,065	A	12/1975	Nozick et al.	
4,030,503	A	6/1977	Clark, III	
4,034,642	A	7/1977	Iannucci et al.	
4,222,380	A	9/1980	Terayama	
4,243,040	A	1/1981	Beecher	
4,287,808	A	9/1981	Leonard et al.	
4,324,262	A	4/1982	Hall	
4,393,872	A	7/1983	Reznik et al.	
4,469,100	A	9/1984	Hardwick	
4,523,738	A	6/1985	Raftis et al.	
4,551,862	A *	11/1985	Haber	A61F 2/0036 600/491
4,604,094	A	8/1986	Shook	
4,611,594	A	9/1986	Grayhack et al.	
4,643,184	A	2/1987	Mobin-Uddin	
4,646,736	A	3/1987	Auth et al.	
4,650,466	A	3/1987	Luther	
4,776,337	A	10/1988	Palmaz	
4,790,812	A	12/1988	Hawkins, Jr. et al.	
4,863,440	A	9/1989	Chin et al.	
4,870,953	A	10/1989	DonMichael et al.	
4,883,458	A	11/1989	Shiber	
4,886,062	A	12/1989	Wiktor	
4,890,611	A	1/1990	Monfort et al.	
4,898,575	A	2/1990	Fischell et al.	
4,946,440	A	8/1990	Hall	
4,960,259	A	10/1990	Sunnanvader	
4,978,341	A	12/1990	Niederhauser	
5,059,178	A	10/1991	Ya	
5,100,423	A	3/1992	Fearnot	
5,127,626	A	7/1992	Hilal et al.	
5,129,910	A	7/1992	Phan et al.	
5,135,484	A	8/1992	Wright	
5,154,724	A	10/1992	Andrews	
5,158,533	A	10/1992	Strauss et al.	
5,158,564	A	10/1992	Schnepp-Pesch et al.	
5,192,274	A	3/1993	Bierman	
5,192,286	A	3/1993	Phan et al.	
5,192,290	A	3/1993	Hilal	
5,197,485	A	3/1993	Grooters	
5,329,923	A	7/1994	Lundquist	
5,360,417	A	11/1994	Gravener et al.	
5,364,345	A	11/1994	Lowery et al.	
5,376,101	A	12/1994	Green et al.	
5,383,887	A	1/1995	Nadal	
5,389,100	A	2/1995	Bacich et al.	
5,419,774	A	5/1995	Willard et al.	
5,421,824	A	6/1995	Clement et al.	
5,443,443	A	8/1995	Shiber	
5,456,667	A	10/1995	Ham et al.	
5,476,450	A	12/1995	Ruggio	
5,490,859	A	2/1996	Mische et al.	
5,496,365	A	3/1996	Sgro	
5,527,326	A	6/1996	Hermann et al.	
5,549,626	A	8/1996	Miller et al.	
5,591,137	A	1/1997	Stevens	
5,653,684	A	8/1997	Laptewicz et al.	
5,662,703	A	9/1997	Yurek et al.	
5,746,758	A	5/1998	Nordgren et al.	
5,749,858	A	5/1998	Cramer	
5,769,816	A	6/1998	Barbut et al.	
5,782,817	A	7/1998	Franzel et al.	
5,800,457	A	9/1998	Gelbfish	
5,827,229	A	10/1998	Auth et al.	
5,846,251	A	12/1998	Hart	
5,860,938	A	1/1999	Lafontaine et al.	
5,873,866	A	2/1999	Kondo et al.	
5,873,882	A	2/1999	Straub et al.	
5,876,414	A	3/1999	Straub	
5,895,406	A	4/1999	Gray et al.	
5,908,435	A	6/1999	Samuels	
5,911,710	A	6/1999	Barry et al.	
5,911,733	A	6/1999	Parodi	
5,911,754	A	6/1999	Kanesaka et al.	
5,941,869	A	8/1999	Patterson et al.	
5,947,985	A	9/1999	Imram	
5,954,737	A	9/1999	Lee	
5,971,938	A	10/1999	Hart et al.	
5,972,019	A	10/1999	Engelson et al.	
5,974,938	A	11/1999	Lloyd	
5,989,233	A	11/1999	Yoon	
5,993,483	A	11/1999	Gianotti	
6,030,397	A	2/2000	Moneti et al.	
6,066,158	A	5/2000	Engelson et al.	
6,068,645	A	5/2000	Tu	
6,126,635	A	10/2000	Simpson et al.	
6,142,987	A	11/2000	Tsugita	
6,146,396	A	11/2000	Konya et al.	
6,146,403	A	11/2000	St. Germain	
6,152,946	A	11/2000	Broome et al.	
6,156,055	A	12/2000	Ravenscroft	
6,159,230	A	12/2000	Samuels	
6,165,196	A	12/2000	Stack et al.	
6,168,579	B1	1/2001	Tsugita	
6,179,859	B1	1/2001	Bates et al.	
6,221,006	B1	4/2001	Dubrul et al.	
6,228,060	B1	5/2001	Howell	
6,238,412	B1	5/2001	Dubrul et al.	
6,245,078	B1	6/2001	Ouchi	
6,245,089	B1	6/2001	Daniel et al.	
6,254,571	B1	7/2001	Hart	
6,258,115	B1	7/2001	Dubrul	
6,264,663	B1	7/2001	Cano	
6,306,163	B1	10/2001	Fitz	
6,322,572	B1	11/2001	Lee	
6,350,271	B1	2/2002	Kurz et al.	
6,361,545	B1	3/2002	Macoviak et al.	
6,364,895	B1	4/2002	Greenhalgh	
6,368,339	B1	4/2002	Amplatz	
6,383,205	B1	5/2002	Samson et al.	
6,402,771	B1	6/2002	Palmer et al.	
6,413,235	B1	7/2002	Parodi	
6,423,032	B2	7/2002	Parodi	
6,432,122	B1	8/2002	Gilson et al.	
6,451,036	B1	9/2002	Heitzmann et al.	
6,458,103	B1	10/2002	Albert et al.	
6,475,236	B1	11/2002	Roubin et al.	
6,485,502	B2	11/2002	Don Michael	
6,508,782	B1	1/2003	Evans et al.	
6,511,492	B1	1/2003	Rosenbluth et al.	
6,514,273	B1	2/2003	Voss et al.	
6,530,923	B1	3/2003	Dubrul et al.	
6,530,935	B2	3/2003	Wensel et al.	
6,544,276	B1	4/2003	Azizi	
6,544,278	B1	4/2003	Vrba et al.	
6,544,279	B1	4/2003	Hopkins et al.	
6,551,342	B1	4/2003	Shen et al.	
6,564,828	B1	5/2003	Ishida	
6,569,181	B1	5/2003	Burns	
6,575,995	B1	6/2003	Huter et al.	
6,589,263	B1	7/2003	Hopkins et al.	
6,596,011	B2	7/2003	Johnson et al.	
6,602,271	B2	8/2003	Adams et al.	
6,605,074	B2	8/2003	Zadno-azizi et al.	
6,605,102	B1	8/2003	Mazzocchi et al.	
6,610,077	B1	8/2003	Hancock et al.	
6,620,148	B1	9/2003	Tsugita	
6,620,179	B2	9/2003	Brook et al.	

(56) **References Cited**

U.S. PATENT DOCUMENTS

6,620,182 B1 9/2003 Khosravi et al.
6,623,460 B1 9/2003 Heck
6,635,068 B1 10/2003 Dubrul et al.
6,645,222 B1 11/2003 Parodi et al.
6,660,013 B2 12/2003 Rabiner et al.
6,660,014 B2 12/2003 Demarais et al.
6,663,650 B2 12/2003 Sepetka et al.
6,692,504 B2 2/2004 Kurz et al.
6,699,260 B2 3/2004 Dubrul et al.
6,702,830 B1 3/2004 Demarais et al.
6,719,717 B1 4/2004 Johnson et al.
6,755,847 B2 6/2004 Eskuri
6,767,353 B1 7/2004 Shiber
6,790,204 B2 9/2004 Zadno-azizi et al.
6,800,080 B1 10/2004 Bates
6,818,006 B2 11/2004 Douk et al.
6,824,545 B2 11/2004 Sepetka et al.
6,824,550 B1 11/2004 Noriega et al.
6,824,553 B1 11/2004 Gene et al.
6,830,561 B2 12/2004 Jansen et al.
6,846,029 B1 1/2005 Ragner et al.
6,902,540 B2 6/2005 Porros et al.
6,939,361 B1 9/2005 Kleshinski
6,942,682 B2 9/2005 Vrba et al.
6,945,977 B2 9/2005 Demarais et al.
6,960,189 B2 11/2005 Bates et al.
6,960,222 B2 11/2005 Vo et al.
7,004,931 B2 2/2006 Hogendijk
7,004,954 B1 2/2006 Voss et al.
7,036,707 B2 5/2006 Aota et al.
7,041,084 B2 5/2006 Fotjik
7,052,500 B2 5/2006 Bashiri et al.
7,056,328 B2 6/2006 Arnott
7,063,707 B2 6/2006 Bose et al.
7,069,835 B2 7/2006 Nishri et al.
7,094,249 B1 8/2006 Thomas et al.
7,179,273 B1 2/2007 Palmer et al.
7,223,253 B2 5/2007 Hogendijk
7,232,432 B2 6/2007 Fulton, III et al.
7,244,243 B2 7/2007 Lary
7,285,126 B2 10/2007 Sepetka et al.
7,300,458 B2 11/2007 Henkes et al.
7,306,618 B2 12/2007 Demond et al.
7,320,698 B2 1/2008 Eskuri
7,323,002 B2 1/2008 Johnson et al.
7,331,980 B2 2/2008 Dubrul et al.
7,534,234 B2 5/2009 Fotjik
7,578,830 B2 8/2009 Kusleika et al.
7,621,870 B2 11/2009 Berrada et al.
7,674,247 B2 3/2010 Fotjik
7,691,121 B2 4/2010 Rosenbluth
7,695,458 B2 4/2010 Belley et al.
7,763,010 B2 7/2010 Evans et al.
7,766,934 B2 8/2010 Pal et al.
7,775,501 B2 * 8/2010 Kees F16K 7/065 251/5
7,780,696 B2 8/2010 Daniel et al.
7,905,877 B1 3/2011 Oscar et al.
7,905,896 B2 3/2011 Straub
7,938,809 B2 5/2011 Lampropoulos et al.
7,938,820 B2 5/2011 Webster et al.
7,967,790 B2 6/2011 Whiting et al.
7,976,511 B2 7/2011 Fotjik
7,993,302 B2 8/2011 Hebert et al.
7,993,363 B2 8/2011 Demond et al.
8,043,313 B2 10/2011 Krolik et al.
8,052,640 B2 11/2011 Fiorella et al.
8,057,496 B2 11/2011 Fischer, Jr.
8,057,497 B1 11/2011 Raju et al.
8,066,757 B2 11/2011 Ferrera et al.
8,070,769 B2 12/2011 Broome
8,070,791 B2 12/2011 Ferrera et al.
8,075,510 B2 12/2011 Aklog et al.
8,088,140 B2 1/2012 Ferrera et al.
8,092,486 B2 1/2012 Berrada et al.
8,100,935 B2 1/2012 Rosenbluth et al.
8,109,962 B2 2/2012 Pal
8,118,829 B2 2/2012 Carrison et al.
8,197,493 B2 6/2012 Ferrera et al.
8,246,641 B2 8/2012 Osborne et al.
8,261,648 B1 9/2012 Marchand et al.
8,267,897 B2 9/2012 Wells
8,298,257 B2 10/2012 Sepetka et al.
8,317,748 B2 11/2012 Fiorella et al.
8,337,450 B2 12/2012 Fotjik
RE43,902 E 1/2013 Hopkins et al.
8,357,178 B2 1/2013 Grandfield et al.
8,361,104 B2 1/2013 Jones et al.
8,409,215 B2 4/2013 Sepetka et al.
8,486,105 B2 7/2013 Demond et al.
8,491,539 B2 7/2013 Fotjik
8,512,352 B2 8/2013 Martin
8,535,283 B2 9/2013 Heaton et al.
8,535,334 B2 9/2013 Martin
8,545,526 B2 10/2013 Martin et al.
8,568,432 B2 10/2013 Straub
8,574,262 B2 11/2013 Ferrera et al.
8,579,915 B2 11/2013 French et al.
8,585,713 B2 11/2013 Ferrera et al.
8,608,754 B2 12/2013 Wensel et al.
8,657,867 B2 2/2014 Dorn et al.
8,696,622 B2 4/2014 Fiorella et al.
8,715,314 B1 5/2014 Janardhan et al.
8,721,714 B2 5/2014 Kelley
8,753,322 B2 6/2014 Hu et al.
8,771,289 B2 7/2014 Mohiuddin et al.
8,777,893 B2 7/2014 Malewicz
8,784,441 B2 7/2014 Rosenbluth et al.
8,784,442 B2 7/2014 Jones et al.
8,795,305 B2 8/2014 Martin et al.
8,795,345 B2 8/2014 Grandfield et al.
8,801,748 B2 8/2014 Martin
8,808,259 B2 8/2014 Walton et al.
8,814,927 B2 8/2014 Shin et al.
8,820,207 B2 9/2014 Marchand et al.
8,826,791 B2 9/2014 Thompson et al.
8,828,044 B2 9/2014 Aggerholm et al.
8,833,224 B2 9/2014 Thompson et al.
8,845,621 B2 9/2014 Fotjik
8,852,226 B2 10/2014 Gilson et al.
8,939,991 B2 1/2015 Krolik et al.
8,945,143 B2 2/2015 Ferrera et al.
8,945,172 B2 2/2015 Ferrera et al.
8,956,384 B2 2/2015 Berrada et al.
8,992,504 B2 3/2015 Castella et al.
9,005,172 B2 4/2015 Chung
9,028,401 B1 5/2015 Bacich et al.
9,078,682 B2 7/2015 Lenker et al.
9,101,382 B2 8/2015 Krolik et al.
9,125,683 B2 9/2015 Farhangnia et al.
9,126,016 B2 9/2015 Fulton
9,149,609 B2 10/2015 Ansel et al.
9,155,552 B2 10/2015 Ulm, III
9,161,766 B2 10/2015 Slee et al.
9,173,668 B2 11/2015 Ulm, III
9,186,487 B2 11/2015 Dubrul et al.
9,204,887 B2 12/2015 Cully et al.
9,216,277 B2 12/2015 Myers
9,358,037 B2 1/2016 Farhangnia et al.
9,259,237 B2 2/2016 Quick et al.
9,283,066 B2 3/2016 Hopkins et al.
9,351,747 B2 5/2016 Kugler et al.
9,439,664 B2 9/2016 Sos
9,439,751 B2 9/2016 White et al.
9,456,834 B2 10/2016 Folk
9,463,035 B1 10/2016 Greenhalgh et al.
9,463,036 B2 10/2016 Brady et al.
9,526,864 B2 12/2016 Quick
9,526,865 B2 12/2016 Quick
9,566,424 B2 2/2017 Pessin
9,579,116 B1 2/2017 Nguyen et al.
9,616,213 B2 4/2017 Furnish et al.
9,636,206 B2 5/2017 Nguyen et al.
9,643,035 B2 5/2017 Mastenbroek

(56) **References Cited**

U.S. PATENT DOCUMENTS

9,700,332 B2 7/2017 Marchand et al.
9,717,514 B2 8/2017 Martin et al.
9,717,519 B2 8/2017 Rosenbluth et al.
9,744,024 B2 8/2017 Nguyen et al.
9,757,137 B2 9/2017 Krolik et al.
9,827,084 B2 11/2017 Bonnette et al.
9,844,386 B2 12/2017 Nguyen et al.
9,844,387 B2 12/2017 Marchand et al.
9,848,975 B2 12/2017 Hauser
9,849,014 B2 12/2017 Kusleika
9,962,178 B2 5/2018 Greenhalgh et al.
9,980,813 B2 * 5/2018 Eller F16K 7/06
9,999,493 B2 6/2018 Nguyen et al.
10,004,531 B2 6/2018 Rosenbluth et al.
10,010,335 B2 7/2018 Greenhalgh et al.
10,016,266 B2 7/2018 Hauser
10,028,759 B2 7/2018 Wallace et al.
10,045,790 B2 8/2018 Cox et al.
10,098,651 B2 10/2018 Marchand et al.
10,130,385 B2 11/2018 Farhangnia et al.
10,226,263 B2 3/2019 Look et al.
10,238,406 B2 3/2019 Cox et al.
10,271,864 B2 4/2019 Greenhalgh et al.
10,327,883 B2 6/2019 Yachia
10,335,186 B2 7/2019 Rosenbluth et al.
10,342,571 B2 7/2019 Marchand et al.
10,349,960 B2 7/2019 Quick
10,383,644 B2 8/2019 Molaei et al.
10,478,535 B2 11/2019 Ogle
10,524,811 B2 1/2020 Marchand et al.
10,588,655 B2 3/2020 Rosenbluth et al.
10,695,159 B2 6/2020 Hauser
10,709,471 B2 7/2020 Rosenbluth et al.
10,799,331 B2 10/2020 Hauser
10,912,577 B2 2/2021 Marchand et al.
11,000,682 B2 5/2021 Merritt et al.
11,013,523 B2 5/2021 Arad Hadar
11,058,445 B2 7/2021 Cox et al.
11,058,451 B2 7/2021 Marchand et al.
11,147,571 B2 10/2021 Cox et al.
11,154,314 B2 10/2021 Quick
11,259,821 B2 3/2022 Buck et al.
11,406,801 B2 8/2022 Fojtik et al.
11,433,218 B2 9/2022 Quick et al.
11,439,799 B2 9/2022 Buck et al.
11,457,936 B2 10/2022 Buck et al.
11,529,158 B2 12/2022 Hauser
11,554,005 B2 1/2023 Merritt et al.
11,559,382 B2 1/2023 Merritt et al.
2001/0004699 A1 6/2001 Gittings et al.
2001/0041909 A1 11/2001 Tsugita et al.
2001/0049486 A1 12/2001 Evans et al.
2001/0051810 A1 12/2001 Dubrul et al.
2002/0022858 A1 2/2002 Demond et al.
2002/0022859 A1 2/2002 Hogendijk
2002/0026211 A1 2/2002 Khosravi et al.
2002/0032455 A1 3/2002 Boock et al.
2002/0049452 A1 4/2002 Kurz et al.
2002/0095161 A1 7/2002 Dhindsa
2002/0095171 A1 7/2002 Belef
2002/0111648 A1 8/2002 Kusleika et al.
2002/0120277 A1 8/2002 Hauschild et al.
2002/0147458 A1 10/2002 Hiblar et al.
2002/0151918 A1 10/2002 Lafontaine et al.
2002/0156457 A1 10/2002 Fisher
2002/0161392 A1 10/2002 Dubrul
2002/0169474 A1 11/2002 Kusleika
2002/0173819 A1 11/2002 Leeflang et al.
2002/0188276 A1 12/2002 Evans et al.
2003/0083693 A1 5/2003 Daniel et al.
2003/0100919 A1 5/2003 Hopkins et al.
2003/0114875 A1 6/2003 Sjostrom
2003/0116731 A1 * 6/2003 Hartley F16K 7/06
251/297
2003/0125663 A1 7/2003 Coleman et al.
2003/0135230 A1 7/2003 Massey et al.
2003/0135258 A1 7/2003 Andreas et al.
2003/0153873 A1 8/2003 Luther et al.
2003/0153973 A1 8/2003 Soun et al.
2003/0168068 A1 9/2003 Poole et al.
2003/0176884 A1 9/2003 Berrada et al.
2003/0191516 A1 10/2003 Weldon et al.
2003/0208224 A1 11/2003 Broome
2003/0216774 A1 11/2003 Larson
2004/0039412 A1 2/2004 Isshiki et al.
2004/0068288 A1 4/2004 Palmer et al.
2004/0073243 A1 4/2004 Sepetka et al.
2004/0098033 A1 5/2004 Leeflang et al.
2004/0122359 A1 6/2004 Wenz et al.
2004/0127936 A1 7/2004 Salahieh et al.
2004/0133232 A1 7/2004 Rosenbluth et al.
2004/0138525 A1 7/2004 Saadat et al.
2004/0138692 A1 7/2004 Phung et al.
2004/0167567 A1 8/2004 Cano et al.
2004/0199201 A1 10/2004 Kellett et al.
2004/0199202 A1 10/2004 Dubrul et al.
2004/0260344 A1 12/2004 Lyons et al.
2004/0267272 A1 12/2004 Henniges et al.
2005/0033172 A1 2/2005 Dubrul et al.
2005/0038468 A1 2/2005 Panetta et al.
2005/0054995 A1 3/2005 Barzell et al.
2005/0055047 A1 3/2005 Greenhalgh
2005/0085769 A1 4/2005 MacMahon et al.
2005/0085826 A1 4/2005 Nair et al.
2005/0085846 A1 4/2005 Carrison et al.
2005/0085849 A1 4/2005 Sepetka et al.
2005/0119668 A1 6/2005 Teague et al.
2005/0177132 A1 8/2005 Lentz et al.
2005/0187570 A1 8/2005 Nguyen et al.
2005/0283165 A1 12/2005 Gadberry
2005/0283166 A1 12/2005 Greenhalgh et al.
2005/0283186 A1 12/2005 Berrada et al.
2006/0020286 A1 1/2006 Niermann
2006/0042786 A1 3/2006 West
2006/0047286 A1 3/2006 West
2006/0074401 A1 4/2006 Ross
2006/0089533 A1 4/2006 Ziegler et al.
2006/0100662 A1 5/2006 Daniel et al.
2006/0155305 A1 7/2006 Freudenthal et al.
2006/0173525 A1 8/2006 Behl et al.
2006/0195137 A1 8/2006 Sepetka et al.
2006/0200221 A1 9/2006 Malewicz
2006/0217664 A1 9/2006 Hattier et al.
2006/0224177 A1 10/2006 Finitsis
2006/0229645 A1 10/2006 Bonnette et al.
2006/0247500 A1 11/2006 Voegele et al.
2006/0253145 A1 11/2006 Lucas
2006/0276874 A1 12/2006 Wilson et al.
2006/0282111 A1 12/2006 Morsi
2006/0293696 A1 12/2006 Fahey et al.
2007/0010787 A1 1/2007 Hackett et al.
2007/0038225 A1 2/2007 Osborne
2007/0093744 A1 4/2007 Elmaieh
2007/0112374 A1 5/2007 Paul, Jr. et al.
2007/0118165 A1 5/2007 DeMello et al.
2007/0149996 A1 6/2007 Coughlin
2007/0161963 A1 7/2007 Smalling
2007/0179513 A1 8/2007 Deutsch
2007/0191866 A1 8/2007 Palmer et al.
2007/0198028 A1 8/2007 Miloslavski et al.
2007/0208361 A1 9/2007 Okushi et al.
2007/0208367 A1 9/2007 Fiorella et al.
2007/0213753 A1 9/2007 Waller
2007/0213765 A1 9/2007 Adams et al.
2007/0255252 A1 11/2007 Mehta
2007/0288054 A1 12/2007 Tanaka et al.
2008/0015541 A1 1/2008 Rosenbluth et al.
2008/0088055 A1 4/2008 Ross
2008/0157017 A1 7/2008 Macatangay et al.
2008/0167678 A1 7/2008 Morsi
2008/0183136 A1 7/2008 Lenker et al.
2008/0228209 A1 9/2008 DeMello et al.
2008/0234715 A1 9/2008 Pesce et al.
2008/0234722 A1 9/2008 Bonnette et al.

(56) **References Cited**

U.S. PATENT DOCUMENTS

2008/0262528	A1	10/2008	Martin
2008/0269798	A1	10/2008	Ramzipoor et al.
2008/0300466	A1	12/2008	Gresham
2009/0018566	A1	1/2009	Escudero et al.
2009/0054918	A1	2/2009	Henson
2009/0062841	A1	3/2009	Amplatz et al.
2009/0069828	A1	3/2009	Martin et al.
2009/0076417	A1	3/2009	Jones
2009/0160112	A1	6/2009	Ostrovsky
2009/0163846	A1	6/2009	Aklog et al.
2009/0182362	A1	7/2009	Thompson et al.
2009/0192495	A1	7/2009	Ostrovsky et al.
2009/0281525	A1	11/2009	Harding et al.
2009/0292307	A1	11/2009	Razack
2009/0299393	A1	12/2009	Martin et al.
2010/0016837	A1	1/2010	Howat
2010/0030256	A1	2/2010	Dubrul et al.
2010/0042136	A1	2/2010	Berrada et al.
2010/0087844	A1	4/2010	Fischer, Jr.
2010/0087850	A1	4/2010	Razack
2010/0114113	A1	5/2010	Dubrul et al.
2010/0121312	A1	5/2010	Gielenz et al.
2010/0137846	A1	6/2010	Desai et al.
2010/0190156	A1	7/2010	Van Wordragen et al.
2010/0204712	A1	8/2010	Mallaby
2010/0217276	A1	8/2010	Garrison et al.
2010/0249815	A1	9/2010	Jantzen et al.
2010/0268264	A1	10/2010	Bonnette et al.
2010/0318178	A1	12/2010	Rapaport et al.
2011/0034986	A1	2/2011	Chou et al.
2011/0034987	A1	2/2011	Kennedy
2011/0054405	A1	3/2011	Whiting et al.
2011/0060212	A1	3/2011	Slee et al.
2011/0118817	A1	5/2011	Gunderson et al.
2011/0125181	A1	5/2011	Brady et al.
2011/0144592	A1*	6/2011	Wong A61M 39/0613 604/175
2011/0152823	A1	6/2011	Mohiuddin et al.
2011/0152993	A1	6/2011	Marchand et al.
2011/0160742	A1	6/2011	Ferrera et al.
2011/0160763	A1	6/2011	Ferrera et al.
2011/0190806	A1	8/2011	Wittens
2011/0196309	A1	8/2011	Wells
2011/0196414	A1	8/2011	Porter et al.
2011/0213290	A1	9/2011	Chin et al.
2011/0213403	A1	9/2011	Aboytes
2011/0224707	A1	9/2011	Miloslavski et al.
2011/0245807	A1	10/2011	Sakata et al.
2011/0251629	A1	10/2011	Gaidonik et al.
2011/0264133	A1	10/2011	Hanlon et al.
2011/0265681	A1	11/2011	Allen et al.
2011/0288529	A1	11/2011	Fulton
2011/0288572	A1	11/2011	Martin
2011/0319917	A1	12/2011	Ferrera et al.
2012/0059309	A1	3/2012	di Palma et al.
2012/0059356	A1	3/2012	di Palma et al.
2012/0083824	A1	4/2012	Berrada et al.
2012/0083868	A1	4/2012	Shrivastava
2012/0089216	A1	4/2012	Rapaport et al.
2012/0101480	A1	4/2012	Ingle et al.
2012/0101510	A1	4/2012	Lenker et al.
2012/0138832	A1	6/2012	Townsend
2012/0143239	A1	6/2012	Aklog et al.
2012/0165919	A1	6/2012	Cox et al.
2012/0172918	A1	7/2012	Fifer et al.
2012/0179181	A1	7/2012	Straub et al.
2012/0197277	A1	8/2012	Stinis
2012/0232655	A1	9/2012	Lorrison et al.
2012/0271105	A1	10/2012	Nakamura et al.
2012/0271231	A1	10/2012	Agrawal
2012/0277788	A1	11/2012	Cattaneo
2012/0310166	A1	12/2012	Huff
2013/0030460	A1	1/2013	Marks et al.
2013/0035628	A1	2/2013	Garrison et al.
2013/0046332	A1	2/2013	Jones et al.
2013/0066348	A1	3/2013	Fiorella et al.
2013/0092012	A1	4/2013	Marchand et al.
2013/0096571	A1	4/2013	Massicotte et al.
2013/0102996	A1	4/2013	Strauss
2013/0116708	A1	5/2013	Ziniti et al.
2013/0116721	A1	5/2013	Takagi et al.
2013/0126559	A1	5/2013	Cowan et al.
2013/0144326	A1	6/2013	Brady et al.
2013/0165871	A1	6/2013	Fiorella et al.
2013/0184703	A1	7/2013	Shireman et al.
2013/0197454	A1	8/2013	Shibata et al.
2013/0197567	A1	8/2013	Brady et al.
2013/0226196	A1	8/2013	Smith
2013/0281788	A1	10/2013	Garrison
2013/0289608	A1	10/2013	Tanaka et al.
2013/0317589	A1	11/2013	Martin et al.
2013/0345739	A1	12/2013	Brady et al.
2014/0005712	A1	1/2014	Martin
2014/0005713	A1	1/2014	Bowman
2014/0005715	A1	1/2014	Casteiia et al.
2014/0005717	A1	1/2014	Martin et al.
2014/0025048	A1	1/2014	Ward
2014/0031856	A1	1/2014	Martin
2014/0046133	A1	2/2014	Nakamura et al.
2014/0046243	A1	2/2014	Ray et al.
2014/0052161	A1	2/2014	Cully et al.
2014/0074144	A1	3/2014	Shrivastava et al.
2014/0121672	A1	5/2014	Folk
2014/0155830	A1	6/2014	Bonnette et al.
2014/0155980	A1	6/2014	Turjman
2014/0180397	A1	6/2014	Gerberding et al.
2014/0155908	A1	7/2014	Rosenbluth et al.
2014/0188127	A1	7/2014	Dubrul et al.
2014/0188143	A1	7/2014	Martin et al.
2014/0236219	A1	8/2014	Dubrul et al.
2014/0243882	A1	8/2014	Ma
2014/0257253	A1	9/2014	Jemison
2014/0257363	A1	9/2014	Lippert
2014/0276403	A1	9/2014	Follmer et al.
2014/0296868	A1	10/2014	Garrison et al.
2014/0303658	A1	10/2014	Bonnette et al.
2014/0318354	A1	10/2014	Thompson et al.
2014/0324091	A1	10/2014	Rosenbluth
2014/0330286	A1	11/2014	Wallace et al.
2014/0336691	A1	11/2014	Jones et al.
2014/0343593	A1	11/2014	Chin et al.
2014/0364896	A1	12/2014	Consigny
2014/0371779	A1	12/2014	Vale et al.
2015/0005781	A1	1/2015	Lund-Clausen et al.
2015/0005792	A1	1/2015	Ahn
2015/0018859	A1	1/2015	Quick
2015/0018860	A1	1/2015	Quick
2015/0018929	A1	1/2015	Martin et al.
2015/0025555	A1	1/2015	Sos
2015/0032144	A1	1/2015	Holloway
2015/0059908	A1	3/2015	Mollen
2015/0088190	A1	3/2015	Jensen
2015/0127035	A1	5/2015	Trapp et al.
2015/0133990	A1	5/2015	Davidson
2015/0150672	A1	6/2015	Ma
2015/0164523	A1	6/2015	Brady et al.
2015/0164666	A1	6/2015	Johnson et al.
2015/0173782	A1	6/2015	Garrison et al.
2015/0190155	A1	7/2015	Ulm, III
2015/0190156	A1	7/2015	Ulm, III
2015/0196380	A1	7/2015	Berrada et al.
2015/0196744	A1	7/2015	Aboytes
2015/0209058	A1	7/2015	Ferrera et al.
2015/0209165	A1	7/2015	Grandfield et al.
2015/0238207	A1	8/2015	Cox et al.
2015/0250578	A1	9/2015	Cook et al.
2015/0265299	A1	9/2015	Cooper et al.
2015/0305756	A1	10/2015	Rosenbluth
2015/0305859	A1	10/2015	Eller
2015/0352325	A1	12/2015	Quick
2015/0360001	A1	12/2015	Quick
2015/0374391	A1	12/2015	Quick
2016/0022293	A1	1/2016	Dubrul et al.
2016/0058540	A1	3/2016	Don Michael

(56) **References Cited**

U.S. PATENT DOCUMENTS

2016/0074627	A1	3/2016	Cottone
2016/0106448	A1	4/2016	Brady et al.
2016/0106449	A1	4/2016	Brady et al.
2016/0113663	A1	4/2016	Brady et al.
2016/0113664	A1	4/2016	Brady et al.
2016/0113665	A1	4/2016	Brady et al.
2016/0113666	A1	4/2016	Quick
2016/0143721	A1	5/2016	Rosenbluth
2016/0151605	A1	6/2016	Welch et al.
2016/0206344	A1	7/2016	Bruzzi et al.
2016/0008014	A1	8/2016	Rosenbluth
2016/0220741	A1	8/2016	Garrison et al.
2016/0228134	A1	8/2016	Martin et al.
2016/0262774	A1	9/2016	Honda
2016/0262790	A1	9/2016	Rosenbluth et al.
2016/0287276	A1	10/2016	Cox et al.
2016/0367285	A1	12/2016	Sos
2017/0014560	A1	1/2017	Minskoff et al.
2017/0037548	A1	2/2017	Lee
2017/0042571	A1	2/2017	Levi
2017/0049942	A1	2/2017	Conlan et al.
2017/0056032	A1	3/2017	Look et al.
2017/0058623	A1	3/2017	Jaffrey et al.
2017/0079672	A1	3/2017	Quick
2017/0086864	A1	3/2017	Greenhalgh et al.
2017/0100142	A1	4/2017	Look et al.
2017/0105743	A1	4/2017	Vale et al.
2017/0105745	A1	4/2017	Rosenbluth et al.
2017/0112514	A1	4/2017	Marchand et al.
2017/0112513	A1	7/2017	Marchand et al.
2017/0189041	A1	7/2017	Cox et al.
2017/0196576	A1	7/2017	Long et al.
2017/0233908	A1	8/2017	Kroczynski et al.
2017/0252057	A1	9/2017	Bonnette et al.
2017/0265878	A1	9/2017	Marchand et al.
2017/0303939	A1	10/2017	Greenhalgh et al.
2017/0303942	A1	10/2017	Greenhalgh et al.
2017/0303947	A1	10/2017	Greenhalgh et al.
2017/0303948	A1	10/2017	Wallace et al.
2017/0319221	A1	11/2017	Chu
2017/0325839	A1	11/2017	Rosenbluth et al.
2017/0340867	A1	11/2017	Accisano, II
2017/0348014	A1	12/2017	Wallace et al.
2018/0042623	A1	2/2018	Batiste
2018/0042624	A1	2/2018	Greenhalgh et al.
2018/0042626	A1	2/2018	Greenhalgh et al.
2018/0064453	A1	3/2018	Garrison et al.
2018/0064454	A1	3/2018	Losordo et al.
2018/0070968	A1	3/2018	Wallace et al.
2018/0092652	A1	4/2018	Marchand et al.
2018/0104404	A1	4/2018	Ngo-Chu
2018/0105963	A1	4/2018	Quick
2018/0125512	A1	5/2018	Nguyen et al.
2018/0184912	A1	7/2018	Al-Ali
2018/0193043	A1	7/2018	Marchand et al.
2018/0236205	A1	8/2018	Krautkremer et al.
2018/0256177	A1	9/2018	Cooper et al.
2018/0256178	A1	9/2018	Cox et al.
2018/0296240	A1	10/2018	Rosenbluth et al.
2018/0344339	A1	12/2018	Cox et al.
2018/0361116	A1	12/2018	Quick et al.
2019/0000492	A1	1/2019	Casey et al.
2019/0046219	A1	2/2019	Marchand et al.
2019/0070401	A1	3/2019	Merritt et al.
2019/0117244	A1	4/2019	Wallace et al.
2019/0133622	A1	5/2019	Wallace et al.
2019/0133623	A1	5/2019	Wallace et al.
2019/0133624	A1	5/2019	Wallace et al.
2019/0133625	A1	5/2019	Wallace et al.
2019/0133626	A1	5/2019	Wallace et al.
2019/0133627	A1	5/2019	Wallace et al.
2019/0150959	A1	5/2019	Cox et al.
2019/0231373	A1	8/2019	Quick
2019/0239910	A1	8/2019	Brady et al.
2019/0321071	A1	10/2019	Marchand et al.
2019/0336142	A1	11/2019	Torrie et al.
2019/0336148	A1	11/2019	Greenhalgh et al.
2020/0046368	A1	2/2020	Merritt et al.
2020/0113412	A1	4/2020	Jensen
2021/0022843	A1	1/2021	Hauser
2021/0113224	A1	4/2021	Dinh
2021/0137667	A1	5/2021	Bonnette et al.
2021/0186541	A1	6/2021	Thress
2021/0236148	A1	8/2021	Marchand et al.
2021/0290925	A1	9/2021	Merritt et al.
2021/0315598	A1	10/2021	Buck et al.
2021/0330344	A1	10/2021	Rosenbluth et al.
2021/0378694	A1	12/2021	Thress et al.
2022/0000505	A1	1/2022	Hauser
2022/0000506	A1	1/2022	Hauser
2022/0000507	A1	1/2022	Hauser
2022/0015798	A1	1/2022	Marchand et al.
2022/0022898	A1	1/2022	Cox et al.
2022/0039815	A1	2/2022	Thress et al.
2022/0125451	A1	4/2022	Hauser
2022/0142638	A1	5/2022	Enright et al.
2022/0151647	A1	5/2022	Dolendo et al.
2022/0152355	A1	5/2022	Dolendo et al.
2022/0160381	A1	5/2022	Hauser
2022/0160382	A1	5/2022	Hauser
2022/0160383	A1	5/2022	Hauser
2022/0211400	A1	7/2022	Cox et al.
2022/0240959	A1	8/2022	Quick
2022/0346800	A1	11/2022	Merritt et al.
2022/0346801	A1	11/2022	Merritt et al.
2022/0346813	A1	11/2022	Quick
2022/0346814	A1	11/2022	Quick
2022/0347455	A1	11/2022	Merritt et al.
2022/0362512	A1	11/2022	Quick et al.
2023/0046775	A1	2/2023	Quick

FOREIGN PATENT DOCUMENTS

CN	103764049		4/2014
CN	103932756		7/2014
CN	104068910		10/2014
CN	108348319		7/2018
CN	110652645		1/2020
CN	111281482		6/2020
DE	102017004383		7/2018
EP	1254634		11/2002
EP	1867290		2/2013
GB	1588072		4/1981
GB	2498349		7/2013
JP	H6190049		7/1994
JP	H07323090	A	12/1995
JP	2001522631		5/1999
JP	2004097807		4/2004
JP	2005-095242		6/2005
JP	2005230132		9/2005
JP	2005323702		11/2005
JP	2006094876		4/2006
JP	2011526820		1/2010
WO	WO1997017889		5/1997
WO	WO9833443		8/1998
WO	WO9838920		9/1998
WO	WO9839053		9/1998
WO	WO9851237		11/1998
WO	WO1999044542		9/1999
WO	WO0032118		6/2000
WO	WO2000053120		9/2000
WO	WO0202162		1/2002
WO	WO03015840		2/2003
WO	WO2004018916		3/2004
WO	WO2004093696		11/2004
WO	WO2005046736		5/2005
WO	WO2006110186		10/2006
WO	WO2006124307		11/2006
WO	WO2007092820		8/2007
WO	WO2009082513		7/2009
WO	WO2009086482		7/2009
WO	WO2009155571		12/2009
WO	WO2010002549		1/2010
WO	WO2010010545		1/2010

(56) **References Cited**

FOREIGN PATENT DOCUMENTS

WO	WO2010023671	3/2010
WO	WO2010049121	5/2010
WO	WO2010102307	9/2010
WO	WO2011032712	3/2011
WO	WO2011054531	5/2011
WO	WO2011073176	6/2011
WO	WO2012009675	1/2012
WO	WO2012011097	1/2012
WO	WO2012049652	4/2012
WO	WO2012065748	5/2012
WO	WO2012120490	9/2012
WO	WO2012162437	11/2012
WO	WO2014047650	3/2014
WO	WO2014081892	5/2014
WO	WO2015006782	1/2015
WO	WO2015061365	4/2015
WO	WO2015121424	8/2015
WO	WO2015189354	12/2015
WO	WO2015191646	12/2015
WO	WO2017024258	2/2017
WO	WO2017058280	4/2017
WO	WO2017070702	4/2017
WO	WO2017106877	6/2017
WO	WO2017189535	11/2017
WO	WO2017189550	11/2017
WO	WO2017189591	11/2017
WO	WO2017189615	11/2017
WO	WO2017210487	12/2017
WO	WO2018049317	3/2018
WO	WO2018080590	5/2018
WO	WO2018148174	8/2018
WO	WO2019010318	1/2019
WO	WO2019050765	3/2019
WO	WO2019075444	4/2019
WO	WO2019094456	5/2019
WO	WO2019222117	11/2019
WO	WO2019246240	12/2019
WO	WO2020036809	2/2020
WO	WO2021067134	4/2021
WO	WO2021076954	4/2021
WO	WO2021127202	6/2021
WO	WO2021248042	12/2021
WO	WO2022032173	2/2022
WO	WO2022103848	5/2022
WO	WO2022109021	5/2022
WO	WO2022109034	5/2022

OTHER PUBLICATIONS

Gibbs, et al., "Temporary Stent as a bail-out device during percutaneous transluminal coronary angioplasty: preliminary clinical experience," British Heart Journal, 1994, 71:372-377, Oct. 12, 1993, 6 pgs.

Gupta, S. et al., "Acute Pulmonary Embolism Advances in Treatment", JAPI, Association of Physicians India, Mar. 2008, vol. 56, 185-191.

International Search Report and Written Opinion for International App. No. PCT/US13/61470, dated Jan. 17, 2014, 7 pages.

International Search Report and Written Opinion for International App. No. PCT/US2014/046567, dated Nov. 3, 2014, 13 pages.

International Search Report and Written Opinion for International App. No. PCT/US2014/061645, dated Jan. 23, 2015, 15 pages.

International Search Report for International App. No. PCT/US13/71101, dated Mar. 31, 2014, 4 pages.

Konstantinides, S. et al., "Pulmonary embolism hotline 2012—Recent and expected trials", Thrombosis and Haemostasis, Jan. 9, 2013:33; 43-50.

Konstantinides, S. et al., "Pulmonary embolism: risk assessment and management", European Society of Cardiology; European Heart Journal, Sep. 7, 2012:33, 3014-3022.

Kucher, N. et al., "Percutaneous Catheter Thrombectomy Device for Acute Pulmonary Embolism: In Vitro and in Vivo Testing", Circulation, Sep. 2005:112:e28-e32.

Kucher, N., "Catheter Interventions in Massive Pulmonary Embolism", Cardiology Rounds, Mar. 2006 vol. 10, Issue 3, 6 pages.

Kucher, N. et al., "Management of Massive Pulmonary Embolism", Radiology, Sep. 2005:236:3 852-858.

Kucher, N. et al., "Randomized, Controlled Trial of Ultrasound-Assisted Catheter-Directed Thrombolysis for Acute Intermediate-Risk Pulmonary Embolism." Circulation, 2014, 129, pp. 9 pages.

Kuo, W. et al., "Catheter-directed Therapy for the Treatment of Massive Pulmonary Embolism: Systematic Review and Meta-analysis of Modern Techniques", Journal of Vascular and Interventional Radiology, Nov. 2009:20:1431-1440.

Kuo, W. et al., "Catheter-Directed Embolectomy, Fragmentation, and Thrombolysis for the Treatment of Massive Pulmonary Embolism After Failure of Systemic Thrombolysis", American College of CHEST Physicians 2008: 134:250-254.

Kuo, W. MD, "Endovascular Therapy for Acute Pulmonary Embolism", Continuing Medical Education Society of Interventional Radiology ("CME"); Journal of Vascular and Interventional Radiology, Feb. 2012: 23:167-179.

Lee, L. et al., "Massive pulmonary embolism: review of management strategies with a focus on catheter-based techniques", Expert Rev. Cardiovasc. Ther. 8(6), 863-873 (2010).

Liu, S. et al, "Massive Pulmonary Embolism: Treatment with the Rotarex Thrombectomy System", Cardiovascular Interventional Radiology; 2011: 34:106-113.

Muller-Hulsbeck, S. et al. "Mechanical Thrombectomy of Major and Massive Pulmonary Embolism with Use of the Amplatz Thrombectomy Device", Investigative Radiology, Jun. 2001:36:6:317-322.

Reekers, J. et al., "Mechanical Thrombectomy for Early Treatment of Massive Pulmonary Embolism", CardioVascular and Interventional Radiology, 2003: 26:246-250.

Schmitz-Rode et al., "New Mesh Basket for Percutaneous Removal of Wall-Adherent Thrombi in Dialysis Shunts," Cardiovasc Intervent Radiol 16:7-10 1993 4 pgs.

Schmitz-Rode et al., "Temporary Pulmonary Stent Placement as Emergency Treatment of Pulmonary Embolism," Journal of the American College of Cardiology, vol. 48, No. 4, 2006 (5 pgs.).

Schmitz-Rode, T. et al., "Massive Pulmonary Embolism: Percutaneous Emergency Treatment by Pigtail Rotation Catheter", JACC Journal of the American College of Cardiology, Aug. 2000:36:2:375-380.

Spiotta, A et al., "Evolution of thrombectomy approaches and devices for acute stroke: a technical review," J NeuroIntervent Surg 2015, 7, pp. 7 pages.

Svilaas, T. et al., "Thrombus Aspiration During Primary Percutaneous Coronary Intervention." The New England Journal of Medicine, 2008, vol. 358, No. 6, 11 pages.

Tapson, V., "Acute Pulmonary Embolism", The New England Journal of Medicine, Mar. 6, 2008:358:2037-52.

The Penumbra Pivotal Stroke Trial Investigators, "The Penumbra Pivotal Stroke Trial: Safety and Effectiveness of a New Generation of Mechanical Devices for Clot Removal in Intracranial Large Vessel Occlusive Disease." Stroke, 2009, 40: pp. 9 pages.

Truong et al., "Mechanical Thrombectomy of Iliocaval Thrombosis Using a Protective Expandable Sheath," Cardiovasc Intervent Radiol27-254-258, 2004, 5 pgs.

Turk et al., "ADAPT FAST study: a direct aspiration first pass technique for acute stroke thrombectomy." J NeuroIntervent Surg, vol. 6, 2014, 6 pages.

Uflacker, R., "Interventional Therapy for Pulmonary Embolism", Journal of Vascular and Interventional Radiology, Feb. 2001: 12:147-164.

Verma, R., MD et al. "Evaluation of a Newly Developed Percutaneous Thrombectomy Basket Device in Sheep With Central Pulmonary Embolisms", *Investigative Radiology*, Oct. 2006, 41, 729-734.

International Search Report and Written Opinion for International App. No. PCT/US2015/034987 filed Jun. 9, 2015, Applicant: Inceptus Medical, LLC, dated Sep. 17, 2015, 12 pages.

English translation of Japanese Office Action received for JP Application No. 2016-564210, Applicant: Inceptus Medical, LLC, dated Sep. 4, 2017, 4 pages.

(56) **References Cited**

OTHER PUBLICATIONS

Australian Exam Report received for AU Application No. 2015274704, Applicant: Inceptus Medical, LLC, dated Sep. 7, 2017, 3 pages.
European Search Report received for EP Application No. 15805810.7, Applicant: Inceptus Medical, LLC, dated Sep. 4, 2017, 6 pages.
International Search Report and Written Opinion for International App. No. PCT/US2016/067628 filed Dec. 19, 2016, Applicant: Inari Medical, Inc., dated Apr. 10, 2017, 11 pages.
Goldhaber, S. et al. "Percutaneous Mechanical Thrombectomy for Acute Pulmonary Embolism—A Double-Edged Sword," American College of CHEST Physicians, Aug. 2007, 132:2, 363-372.
Goldhaber, S., "Advanced treatment strategies for acute pulmonary embolism, including thrombolysis and embolectomy," Journal of Thrombosis and Haemostasis, 2009: 7 (Suppl. 1): 322-327.
International Search Report and Written Opinion for International App. No. PCT/US2017/029696, Date of Filing: Apr. 26, 2017, Applicant: Inari Medical, Inc., dated Sep. 15, 2017, 19 pages.
International Search Report and Written Opinion for International App. No. PCT/US2016/058536, Date of Filing: Oct. 24, 2016, Applicant: Inari Medical, Inc., dated Mar. 13, 2017, 14 pages.
European First Office Action received for EP Application No. 13838945.7, Applicant: Inari Medical, Inc., dated Oct. 26, 2018, 7 pages.
International Search Report and Written Opinion for International App. No. PCT/US2018/048786, Date of Filing: Aug. 30, 2018, Applicant: Inari Medical, Inc., dated Dec. 13, 2018, 12 pages.
International Search Report and Written Opinion for International App. No. PCT/US2018/055780, Date of Filing: Oct. 13, 2018, Applicant: Inceptus Medical LLC., dated Jan. 22, 2019, 8 pages.
European Search Report for European Application No. 16876941.2, Date of Filing: Dec. 19, 2016, Applicant: Inari Medical, Inc., dated Jul. 18, 2019, 7 pages.
Extended European Search Report for European Application No. 16858462.1, Date of Filing: Oct. 24, 2016, Applicant: Inari Medical, Inc., dated Jun. 3, 2019, 10 pages.
International Search Report and Written Opinion for International App. No. PCT/US2019/045794, Date of Filing: Aug. 8, 2019, Applicant: Inari Medical, Inc., dated Nov. 1, 2019, 17 pages.
Partial Supplementary European Search Report for European Application No. 17864818.4, Date of Filing: May 21, 2019, Applicant: Inari Medical, Inc., dated Apr. 24, 2020, 11 pages.
International Search Report and Written Opinion for International App. No. PCT/US2020/056067, Date of Filing: Oct. 16, 2020; Applicant: Inari Medical, Inc., dated Jan. 22, 2021, 8 pages.
Extended European Search Report for European Application No. 20191581.6, Applicant: Inari Medical, Inc., dated Mar. 31, 2021, 11 pages.
International Search Report and Written Opinion for International App. No. PCT/US2020/055645, Date of Filing: Dec. 17, 2020; Applicant: Inari Medical, Inc., dated Apr. 14, 2021, 12 pages.
Extended European Search Report for European Application No. 18853465.5, Applicant: Inari Medical, Inc., dated May 7, 2021, 2021, 7 pages.
Vorwerk, D. MD, et al., "Use of a Temporary Caval Filter to Assist Percutaneous Iliocaval Thrombectomy: Experimental Results." SCVIR, 1995, 4 pages.
PCT International Search Report and Written Opinion for International Appln. No. PCT/US2020/014854, dated Oct. 5, 2020 (13 pages).
PCT International Search Report and Written Opinion for International Appln. No. PCT/US2020/018655, dated Dec. 16, 2020 (22 pages).
PCT International Search Report and Written Opinion for International Appln. No. PCT/US2020/017684, dated Nov. 30, 2020 (19 pages).
Extended European Search Report for EP Patent Appln. No. 20185092.2 dated Sep. 11, 2020, 6 pages.
EP Examination Report for EP Patent Appln. No. 18745794.0 dated Jul. 20, 2020, 4 pages.
Wikipedia; Embolectomy; retrieved from the internet: https://en.wikipedia.org/wiki/Embolectomy; 4 pgs.; retrieved/printed: Mar. 24, 2016.
O'Sullivan; Thrombolysis versus thrombectomy in acute deep vein thrombosis; Interventional Cardiology; 3(5); pp. 589-596; Oct. 2011.
Capture Vascular Systems; (company website); retrieved from the internet: http://www.capturevascular.com; 3 pgs.; retrieved/printed: Mar. 24, 2016.
Edwards Lifesciences; Fogarty® Occlusion Catheters (product brochure); retrieved from the internet: http://web.archive.org/web/20150228193218/http://www.edwards.com/products/vascular/atraumaticocclusion/pages/occlusioncatheter.aspx; © 2011; 2 pgs.; retrieved/printed: Mar. 24, 2011.
Boston Scientific; Fetch(TM) 2 Aspiration Catheter (product information);retrieved from the internet: http://www.bostonscientific.com/en-US/products/thrombectomy-systems/fetch2-aspiration-catheter.html; 2 pgs.; retrieved/printed: Mar. 24, 2016.
Penumbra, Inc.; Indigo® System (product information); retrieved from the internet: http://www.penumbrainc.com/peripherallpercutaneous-thromboembolectomy/indigo-system; 7 pgs.; retrieved/printed: Mar. 24, 2016.
YouTube; Merci Retrieval System X Series Animation; uploaded Mar. 16, 2009 (product information); posted on May 7, 2009 by SSMDePAUL, time 1:09, retrieved from the internet: https://www.youtube.com/watch?v=MGX7deuFkhc; 3 pgs.; retrieved/printed: Mar. 24, 2016.
Covidien; Solitaire(TM) AS Neurovascular Remodeling Device (product information): retrieved from the internet: http://www.ev3.net/neuro/intl/remodeling-devices/solitaire-ab. htm; © 2015; 2 pgs.; retrieved/printed: Mar. 24, 2016.
PCT International Search Report and Written Opinion for International Patent Appln. No. PCT/US2019/050467, Applicant Stryker Corporation, dated Dec. 18, 2019 (17 pages).
PCT International Search Report and Written Opinion for International Appln. No. PCT/US2017/029440, Applicant Stryker Corporation, dated Jul. 7, 2017.
PCT International Search Report and Written Opinion for International Appln. No. PCT/US2017/029472, Applicant Stryker Corporation, dated Jul. 7, 2017.
PCT International Search Report and Written Opinion for International Appln. No. PCT/US2017/035543, Applicant Stryker Corporalion, dated Aug. 14, 2017.
PCT International Search Report and Written Opinion for International Appln. No. PCT/US2017/029366, Applicant Stryker Corporation, dated Aug. 29, 2017.
PCT International Search Report and Written Opinion for International Appln. No. PCT/US2017/050933, Applicant Stryker Corporation, forms PCT/ISA/210, 220, and 237, dated Nov. 10, 2017 (16 pages).
International search report and written opinion dated Feb. 28, 2018 for PCT/US2017/029345, Applicant Stryker Corporation 26 pages.
Extended European Search Report dated Aug. 22, 2018 for European patent appln No. 16852212.6, 6 pages.
Extended European Search Report dated Oct. 5, 2018 for European patent appln No. 18174891.4, 6 pages.
International search report and written opinion dated Nov. 14, 2018 for PCT/US2018/040937, Applicant Stryker Corporation 16 pages.
International Search Report and Written Opinion dated Mar. 28, 2019 for International Appln. No. PCT/US2018/059607.
International Search Report and Written Opinion dated May 6, 2016 for PCT/US2016/017982.
PCT International Search Report and Written Opinion for International Patent Appln. No. PCT/US2019/032601, Applicant Stryker Corporation, dated Jul. 23, 2019 (12 pages).
Extended European Search Report dated Oct. 8, 2019 for European Patent Application No. 19191925.7.
International Search Report and Written Opinion for International Patent Appln. No. PCT/US2019/050410 dated Oct. 25, 2019.
International Search Report and Written Opinion for International App. No. PCT/US21/35965, Date of Filing: Jun. 4, 2021, Applicant: Inari Medical, Inc., dated Sep. 28, 2021, 12 pages.

(56) **References Cited**

OTHER PUBLICATIONS

International Search Report and Written Opinion for International App. No. PCT/US21/45072 Date of Filing: Aug. 6, 2021, Applicant: Inari Medical, Inc., dated Jan. 20, 2022, 10 pages.
International Search Report and Written Opinion for International App. No. PCT/US21/58793; Date of Filing: Nov. 10, 2021, Applicant: Inari Medical, Inc., dated Mar. 16, 2022, 13 pages.
International Search Report and Written Opinion for International App. No. PCT/US21/59718; Date of Filing: Nov. 17, 2021, Applicant: Inari Medical, Inc., dated Mar. 22, 2022, 13 pages.
International Search Report and Written Opinion for International App. No. PCT/US21/59735; Date of Filing: Nov. 17, 2021, Applicant: Inari Medical, Inc., dated Mar. 22, 2022, 11 pages.

* cited by examiner

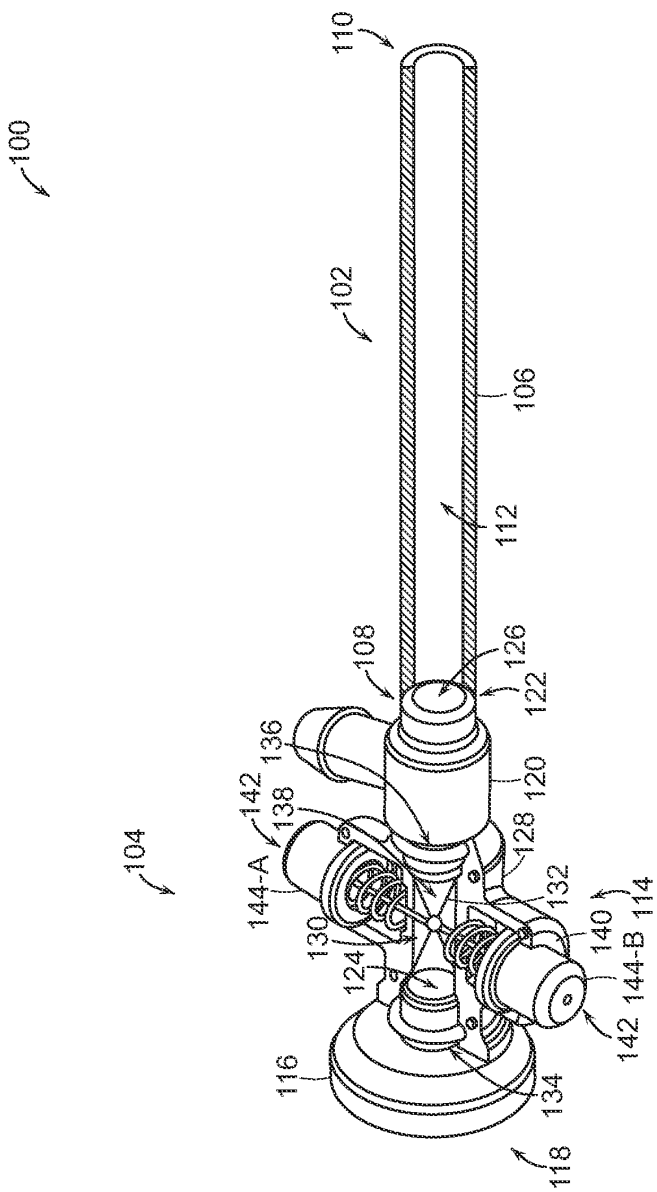
100
110
102
106
112
108
126
122
136
120
142
138
128
104
144-A
132
114
140
130
124
144-B
142
116
134
118

FIG. 1

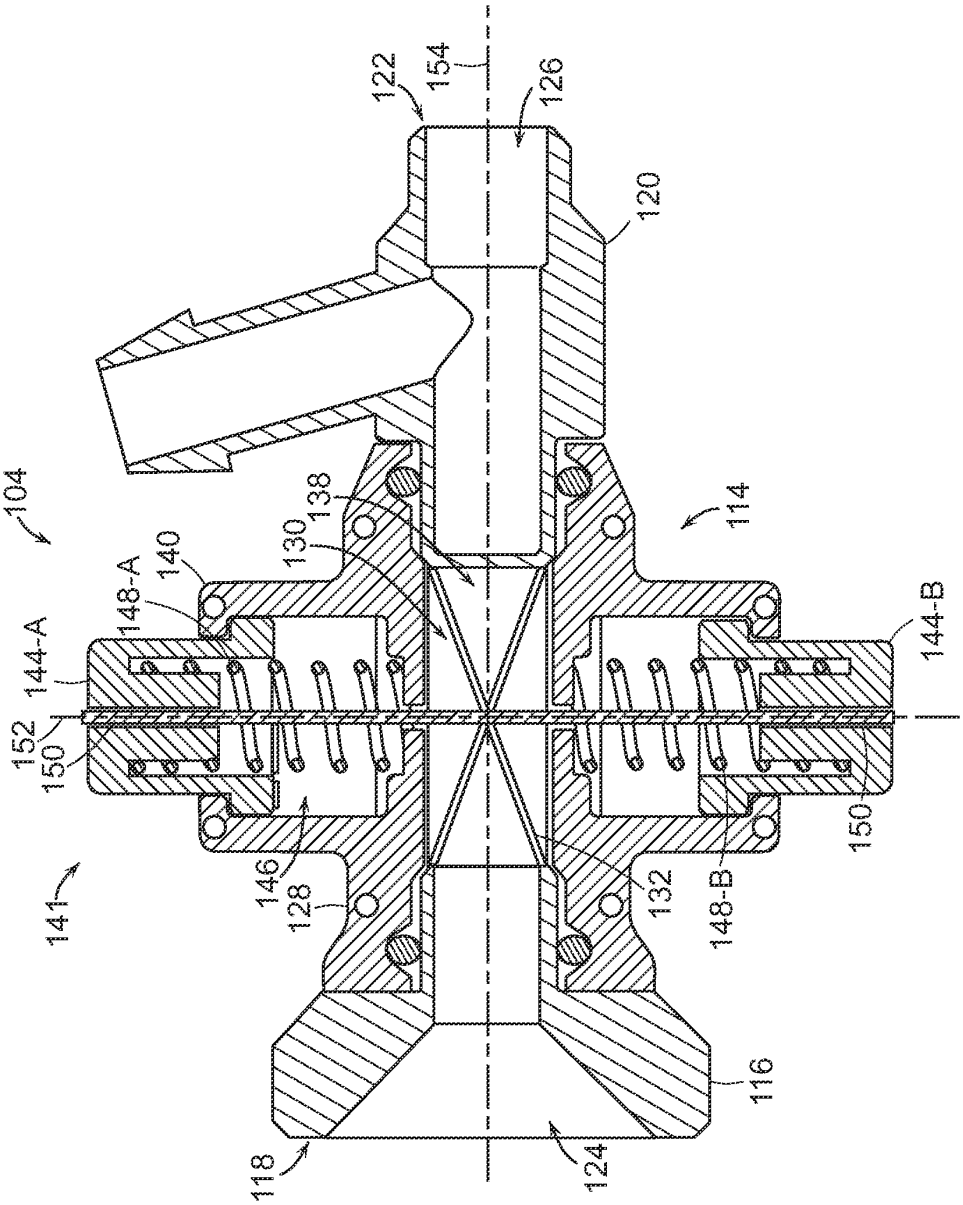
104
122
154
126
120
114
138
130
140
148-A
144-A
152
150
144-B
150
146
128
132
148-B
141
116
118
124

FIG. 2

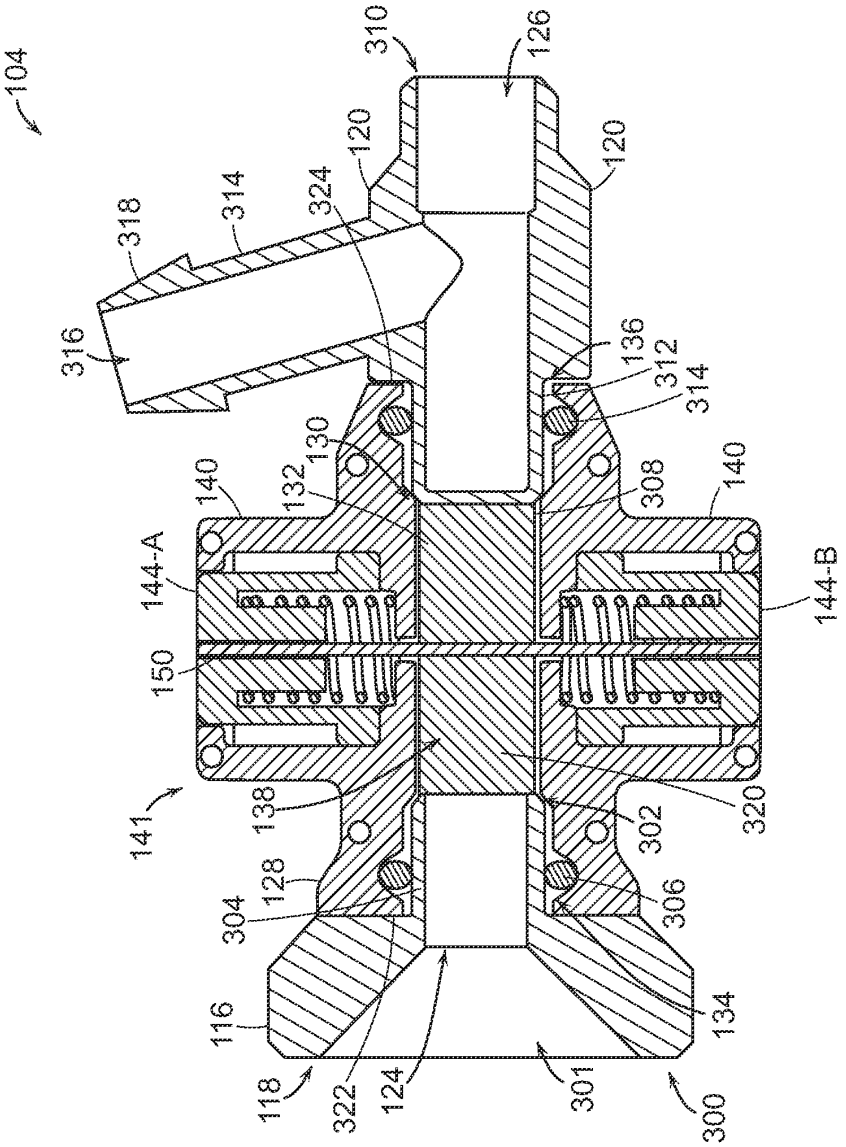
104
310
126
120
120
318
314
324
316
136
312
314
130
140
132
308
140
144-A
144-B
150
141
138
320
302
128
304
306
116
134
118
322
124
301
300

FIG. 3

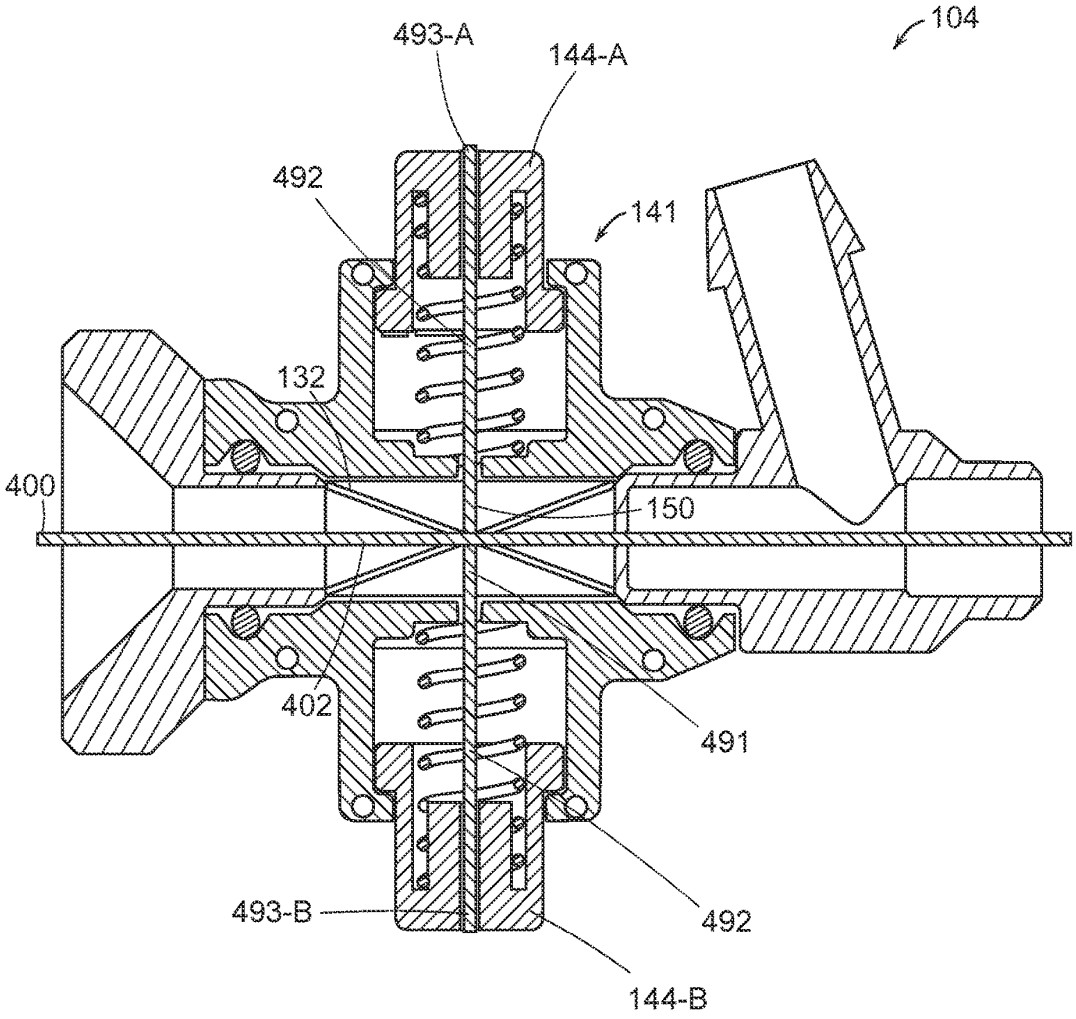

FIG. 4

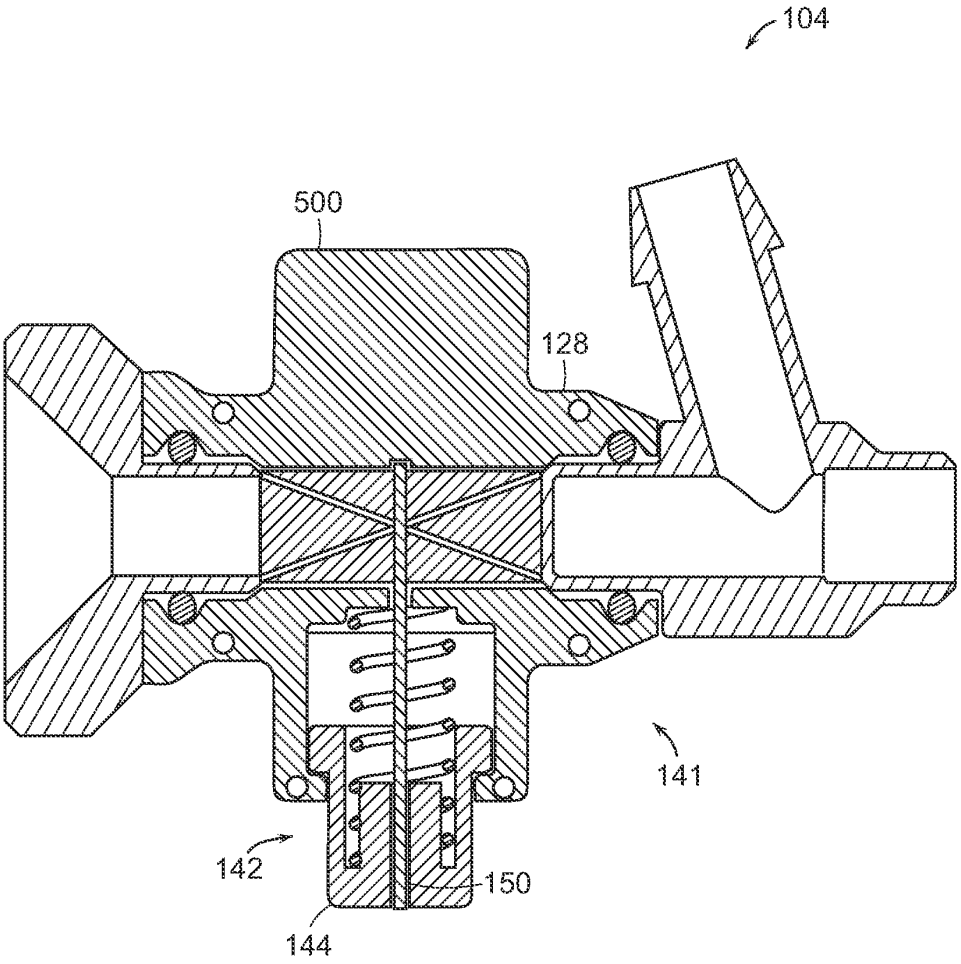

FIG. 5

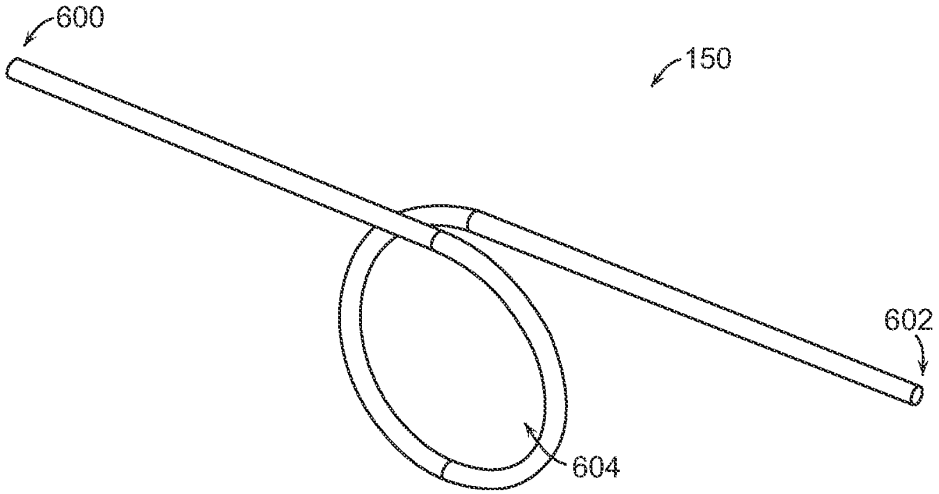

FIG. 6

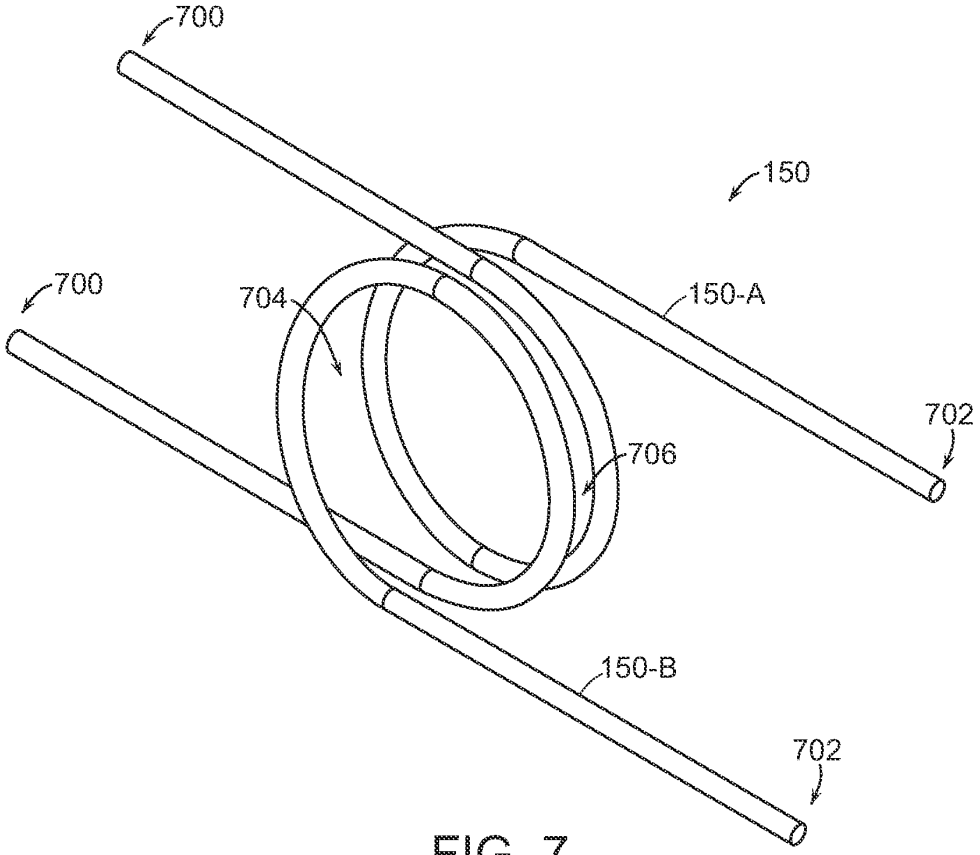

FIG. 7

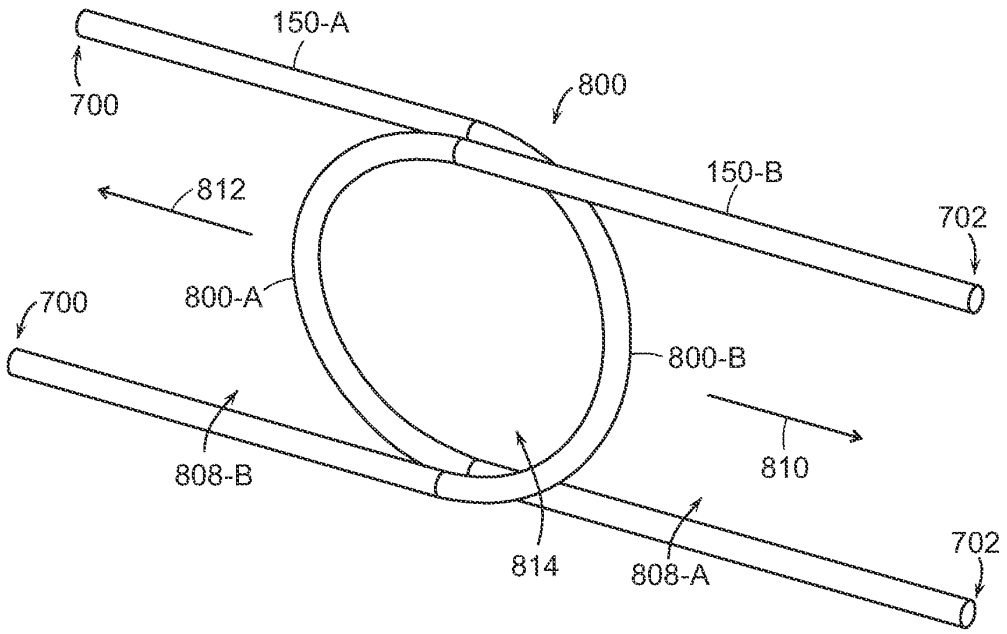
150-A
700
800
150-B
812
702
700
800-A
800-B
808-B
810
814
808-A
702

FIG. 8

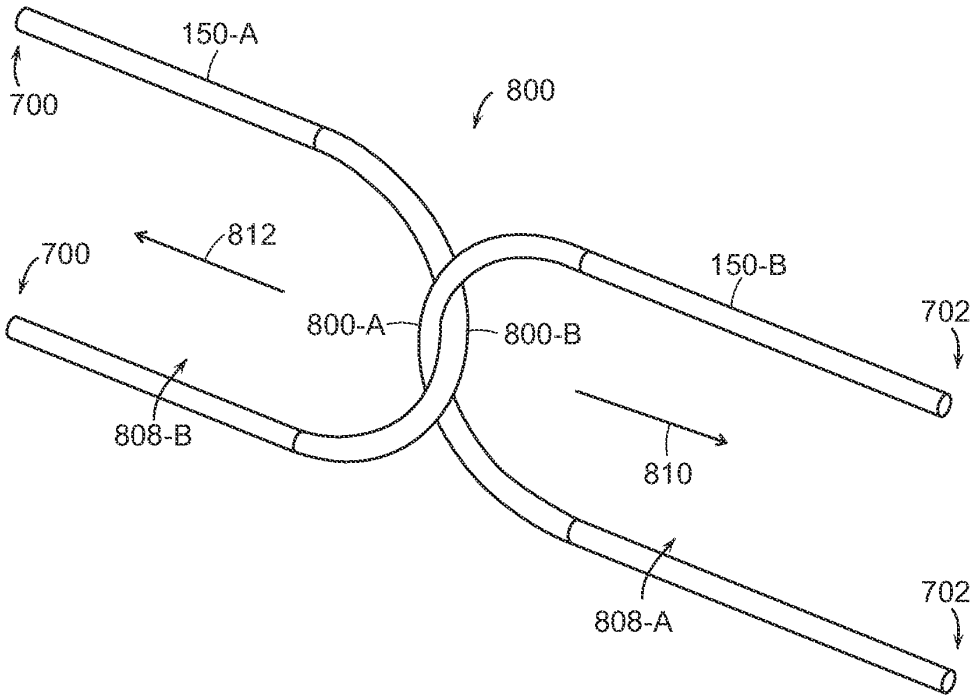
150-A
700
800
812
700
150-B
800-A
800-B
702
808-B
810
808-A
702

FIG. 9

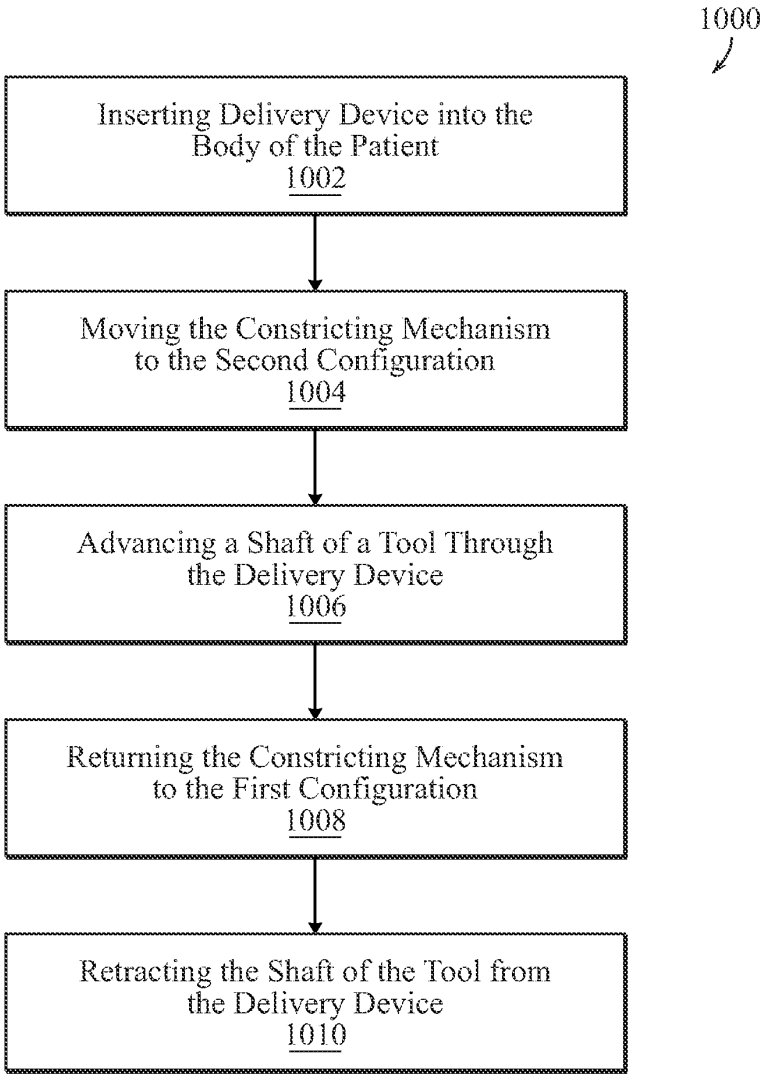
1000
Inserting Delivery Device into the Body of the Patient
1002
Moving the Constricting Mechanism to the Second Configuration
1004
Advancing a Shaft of a Tool Through the Delivery Device
1006
Returning the Constricting Mechanism to the First Configuration
1008
Retracting the Shaft of the Tool from the Delivery Device
1010

FIG. 10

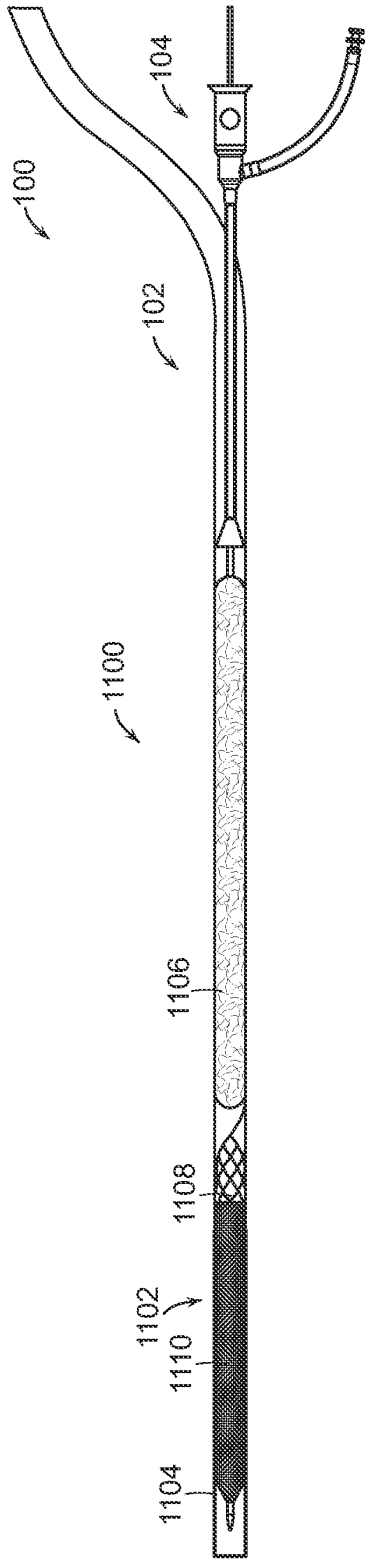

FIG. 11

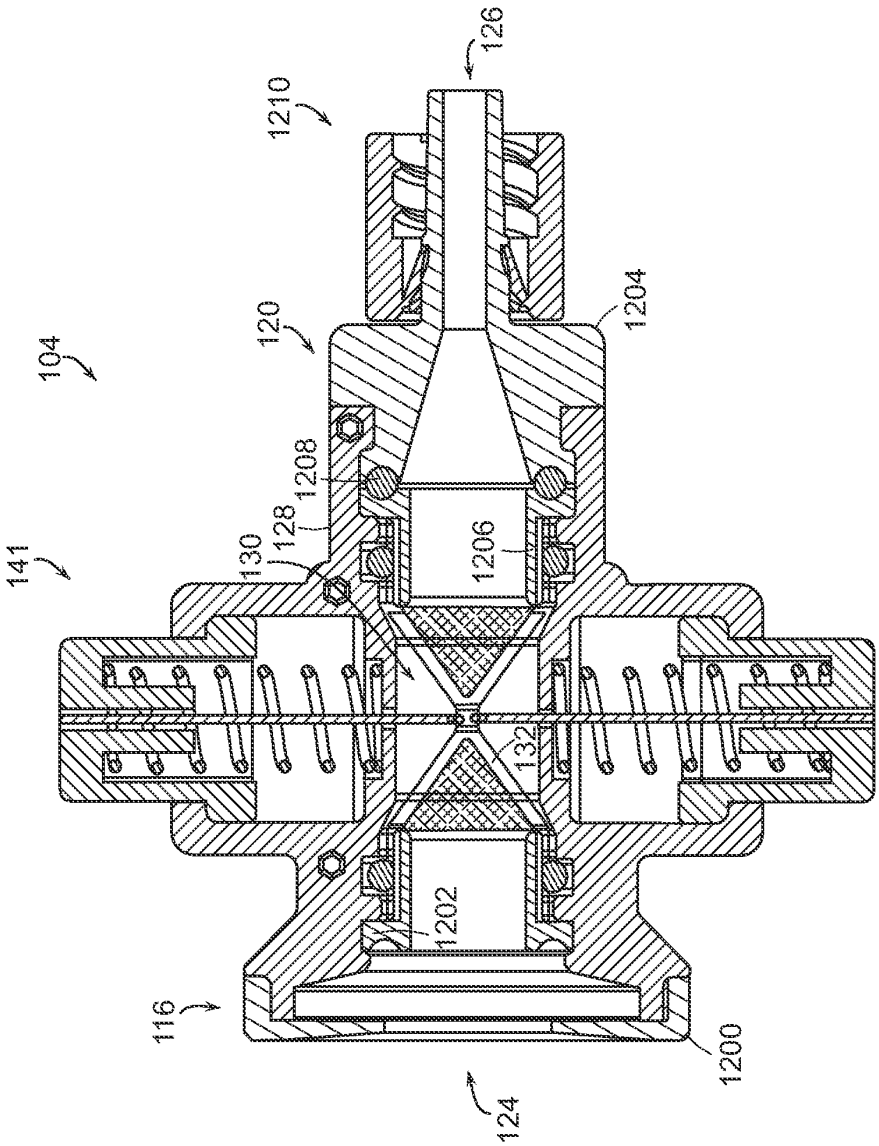
126
1210
120
1204
104
1208
128
130
141
1206
132
1202
116
1200
124

FIG. 12

HEMOSTASIS VALVES AND METHODS OF USE

CROSS-REFERENCE TO RELATED APPLICATIONS

This application is a continuation of U.S. patent application Ser. No. 17/226,318, filed on Apr. 9, 2021, entitled "HEMOSTASIS VALVES AND METHODS OF USE," which is a continuation of U.S. patent application Ser. No. 16/117,519, filed on Aug. 30, 2018, now issued as U.S. Pat. No. 11,000,682, and entitled "HEMOSTASIS VALVES AND METHODS OF USE," which claims the benefit of U.S. Provisional Patent Application No. 62/554,931, filed on Sep. 6, 2017, and entitled "HEMOSTASIS VALVES AND METHODS OF USE," each of which is herein incorporated by reference in its entirety.

BACKGROUND

During a surgical procedure, a portion of a patient's body (e.g., vasculature) is accessed to allow for performance of a desired intervention or treatment. During such surgical procedures, it is desired to minimize patient blood loss, prevent delivery of air into the vasculature, and to maintain the sterility of the accessed portions or sites of the patient's body so as to prevent issues such as infection. Further, the desire for improved patient outcomes has led to the development of hemostasis valves that facilitate minimally invasive surgery.

In minimally invasive surgery, small incisions are created through a blood vessel which one or several catheters are inserted. Each of these one or several catheters can define a lumen extending longitudinally through that catheter. These catheters are moved to a position proximate to tissue, nerves, or other body structures targeted by the surgery, and then tools for performing the procedure are inserted through the lumens of some or all of these catheters.

To minimize blood loss, prevent delivery of air into the vasculature, and to facilitate maintenance of sterility within the patient's body (e.g., blood vessel), these catheters are equipped with hemostasis valves. These valves seal or selectably seal the lumens of the catheters. In many instances, these valves can seal the lumen of the catheter when a tool extends through the catheter, and specifically through the valve. Additionally the valves can seal the lumen when a tool is removed or does not extend through the catheter.

While such traditional hemostasis valves are greatly beneficial for intravascular access, they have some drawbacks. For example, some valves may not seal adequately for all interventional applications or tools, and/or the operation of some valves may be complicated for operator use. The drawbacks of such valve designs may in turn increase the complexity of any surgery performed therewith and/or reduce patient safety (e.g., bleeding, infection, and/or other detrimental complications). Accordingly, new and improved hemostasis valves and methods of use are desired.

SUMMARY

The following relates to valves, medical systems incorporating valves, and methods of using the same. The valve can include a tubular member that can be constricted, collapsed, and/or sealed by one or several tensioning mechanisms. The tensioning mechanism can include at least one filament that extends around at least a portion of the tubular member. The filament can interact with the tubular member to constrict, collapse, and/or seal the tubular member via manipulation of the tensioning mechanism(s). A tool can be inserted through the valve to gain access to a patient's body and specifically to gain access to a blood vessel. Through the use of the tensioning mechanism and filament to constrict, collapse, and/or seal the tubular member, the valve can seal around a wide range of tool sizes and shapes, as well as multiple tools of differing sizes simultaneously. Additionally, such a valve creates a robust seal that maintains its seal when a vacuum is applied such as occurs during aspiration.

Aspects of the present disclosure relate to a hemostatic valve for sealing a medical device. The hemostatic valve includes an elongate member having a first end, a second end, and a central lumen extending therebetween. In some embodiments, the elongate member is pliable. The hemostatic valve can include a reinforcement structure extending along at least a portion of the elongate member, such that the reinforcement structure is coupled to the elongate member. The hemostatic valve includes an active tensioning mechanism coupled to the elongate member. In some embodiments, the tensioning mechanism is moveable between a first configuration in which the central lumen is constricted and sealed and a second configuration in which the central lumen is open. Optionally, the valve may be manually adjusted by the user to intermediate positions between fully open and fully closed. Additionally, an instrument (e.g. catheter) may provide an intermediate position where the valve creates hemostasis without user adjustment.

In some embodiments, the elongate member can be a compliant polymer tube. In some embodiments, the tensioning mechanism can include at least one filament extending at least partially around the elongate member. In some embodiments, the reinforcement structure is positioned between the at least one filament and the elongate member. In some embodiments, the reinforcement structure can be a braided mesh. In some embodiments, the reinforcement structure is coupled to the elongate member at a position proximate to the first end of the elongate member and at a position proximate to the second end of the elongate member. In some embodiments, the reinforcement structure is not coupled to the elongate member at a position between the first end of the elongate member and the second end of the elongate member. In some embodiments, the central portion of the compliant polymer tube that is constrained or collapsed by the tensioning mechanism, and at least one filament, is not coupled to the reinforcement structure.

In some embodiments, the tensioning mechanism can include an actuator coupled to the at least one filament. In some embodiments there are two tensioning mechanisms coupled to the at least one filament that operate in opposite directions. In some embodiments the two tensioning mechanisms are attached to the same filament. In some embodiments the two tensioning mechanisms are attached to opposing filaments. In some embodiments, the actuator can be moveable to control movement of the at least one filament from a first position in which the central lumen is constricted and sealed to a second position in which the central lumen is open. In some embodiments, the at least one filament is in the first position when the tensioning mechanism is in the first configuration. In some embodiments, the actuator is biased towards the first position. In some embodiments, the actuator is biased toward the second position. In some embodiments, the actuator can be a manual actuator.

In some embodiments, the at least one filament forms a loop around the elongate member. In some embodiments, the at least one filament forms a bight around a portion of the elongate member. In some embodiments, the at least one

filament can include a first filament and a second filament. In some embodiments, each of the first filament and the second filament are coupled to the same actuator. In some embodiments, each of the first filament and the second filament are coupled to different actuators. In some embodiments, the first filament and the second filament are moveable from the first position to the second position. In some embodiments, each of the first filament and the second filament form a loop around the elongate member. In some embodiments, the first filament forms a first bight around a first portion of the elongate member, and the second filament forms a second bight around a second portion of the elongate member. In some embodiments, the first bight extends through the second bight.

In some embodiments, the hemostatic valve can include a shell defining a first aperture and a second aperture. In some embodiments, the elongate member extends from the first aperture to the second aperture and fluidly couples the first aperture and the second aperture. In some embodiments, the tensioning mechanism is self-adjustable to seal around tools of different sizes extending through the hemostatic valve. In some embodiments, the central lumen can comprise a single lumen, and in some embodiments, the central lumen can comprise a plurality of lumens.

One aspect of the present disclosure relates to a delivery system for intravascular access of a blood vessel within a patient's body. The delivery system includes a catheter having a first end, a second end, and a catheter lumen extending therebetween and a hemostatic valve coupled to the first end of the catheter. The hemostatic valve includes a tubular member having a first end, a second end, and a central lumen extending therebetween. In some embodiments, the central lumen of the tubular member is fluidly coupled with the catheter lumen. The hemostatic valve includes an active tensioning mechanism coupled to the tubular member, the tensioning mechanism can be moveable between a first configuration in which the tensioning mechanism constricts on the central lumen and the central lumen is sealed and a second configuration in which the central lumen is open.

In some embodiments, the hemostatic valve further includes a reinforcement structure extending along at least a portion of the tubular member. In some embodiments, the reinforcement structure is located between the tensioning mechanism and the tubular member. In some embodiments, the reinforcement structure can be a braided mesh. In some embodiments, the reinforcement structure is coupled to the tubular member at a position proximate to the first end of the tubular member and at a position proximate to the second end of the tubular member. In some embodiments, the reinforcement structure is adhered to the tubular member at the first end of the tubular member and at the second end of the tubular member. In some embodiments, the reinforcement structure is uncoupled to the tubular member between the first end of the tubular member and the second end of the tubular member.

In some embodiments, the tensioning mechanism can include at least one filament extending at least partially around the tubular member. In some embodiments, the tensioning mechanism can include an actuator coupled to the at least one filament. In some embodiments, moving the tensioning mechanism from the first configuration to the second configuration can include moving the actuator and the thereto coupled at least one filament from a first position to a second position. In some embodiments, the filament constricts and seals the central lumen of the tubular member when the filament is in the first position.

In some embodiments, the actuator can be a manual actuator. In some embodiments, the actuator can include a pair of opposing and depressible buttons, which buttons can be biased towards an undepressed position. In some embodiments, the central lumen is sealed when the buttons are in the undepressed position. In some embodiments, the filament can be a monofilament. In some embodiments, the filament can be at least one of: a polymer filament; or a metallic filament. In some embodiments, the catheter can include a thrombus extraction device.

One aspect of the present disclosure relates to a method of sealing a delivery device accessing a blood vessel of a patient. The method includes inserting the delivery device including a catheter and a hemostatic valve into the blood vessel of the patient. In some embodiments, the catheter can have a first end, a second end, and a catheter lumen extending therethrough. In some embodiments, the hemostatic valve can be coupled to the first end and can have a tubular member defining a central lumen fluidly coupled with the catheter lumen and a tensioning mechanism coupled with the tubular member. In some embodiments, the tensioning mechanism collapses and seals the central lumen in a first configuration and thereby seals access to the blood vessel. The method can include moving the tensioning mechanism of the hemostatic valve to a second configuration. In some embodiments, the central lumen is open and access to the blood vessel is unsealed when the tensioning mechanism is in the second configuration. The method can include advancing a shaft of a tool through the delivery device until a first end of the tool reaches a desired position within the blood vessel of the patient and a portion of the shaft is positioned within the central lumen of the tubular member. The method can include returning the tensioning mechanism of the hemostatic valve to the first configuration such that the tubular member collapses on the shaft of the tool and seals around the shaft of the tool.

In some embodiments, the method includes retracting the shaft of the tool from the delivery device. In some embodiments, the tensioning mechanism is maintained in the first configuration during and after the retracting of the shaft of the tool from the delivery device. In some embodiments, the tensioning mechanism is moved to the second configuration during the retracting of the shaft of the tool from the delivery device, and the tensioning mechanism is returned to the first configuration after the shaft of the tool is retracted from the delivery device.

In some embodiments, the tensioning mechanism can include at least one filament extending at least partially around the tubular member. In some embodiments, the at least one filament collapses the tubular member when the tensioning mechanism is in the first configuration. In some embodiments, the at least one filament circumferentially constricts the tubular member to collapse the tubular member when the tensioning mechanism is in the first configuration. In some embodiments, the hemostatic valve can include a reinforcement structure located between the at least one filament and the tubular member.

In some embodiments, the at least one filament forms a loop around the elongate member, and moving the tensioning mechanism from the second configuration to the first configuration reduces a size of the loop to thereby constrict the tubular member within the loop. In some embodiments, the filament forms at least one bight around a portion of the elongate member. In some embodiments, the filament can include a first filament and a second filament. In some embodiments, the at least one bight can include a first bight oriented in a first direction and formed by the first filament

and a second bight oriented in a second direction and formed by the second filament. In some embodiments, the first and second bights overlap to encircle a portion of the tubular member within a constricting area.

In some embodiments, moving the tensioning mechanism from the second configuration to the first configuration can include moving the first bight in the first direction and the second bight in the direction to reduce the size of the constricting area and collapse and seal the central lumen of the tubular member. In some embodiments, the tensioning mechanism can include an actuator. In some embodiments, moving the tensioning mechanism to the second configuration can include manipulating the actuator. In some embodiments, the method includes applying a vacuum to the delivery device and/or delivery system to aspirate material through the catheter. In some embodiments, the central lumen remains sealed during the aspiration. In some embodiments, the tool can include a thrombus extraction device.

BRIEF DESCRIPTION OF THE DRAWINGS

FIG. **1** is a perspective view of one embodiment of a delivery device.

FIG. **2** is a side-section view of one embodiment of a hemostasis valve in a first configuration.

FIG. **3** is a side-section view of one embodiment of the valve in a second configuration.

FIG. **4** is a side-section view of one embodiment of the valve in the first configuration and with a tool extending through the valve.

FIG. **5** is a side-section view of one embodiment of a single-button hemostasis valve in a first configuration.

FIG. **6** is a perspective view of a filament of a valve forming a loop.

FIG. **7** is a perspective view of two filaments of a valve, each of the filaments forming a loop.

FIG. **8** is a perspective view of two overlapping and interlocked bights in an open configuration.

FIG. **9** is a perspective view of two overlapping and interlocked bights in a closed configuration.

FIG. **10** is a flowchart illustrating one embodiment of a method for sealing a valve and/or catheter.

FIG. **11** is a side view of one embodiment of a thrombectomy system including the delivery device.

FIG. **12** is a side-section view of another embodiment of a hemostasis valve having two-piece caps.

DETAILED DESCRIPTION

The present disclosure relates to a valve that can be used a hemostasis valve. This valve, also referred to herein as a garrote valve can seal with or without a tool extending through the valve. The garrote valve provides convenient, single-handed operation for a wide range of medical devices including catheters, wires, embolectomy systems, or the like. This single-handed operation of the garrote valve allows the user to easily and quickly swap different tools being used through the valve without compromising hemostasis and therefore simplifying the procedure. Combined with single-handed operation, the garrote valve provides robust sealing either with or without a tool extending through the valve. This robust sealing minimizes leakage in applications with a pressure differential on different sides of the valve. This pressure differential can arise, for example, during the application of vacuum aspiration in a procedure. Even under such conditions, as well as under other conditions, the garrote valve maintains seal integrity and prevents leakage in one or both directions.

The garrote valve includes a tubular member. The tubular member is a flexible member that defines a central lumen, which can, in some embodiments, define a single lumen, and in some embodiments, defines a plurality of lumens. In some embodiments, each of the plurality of lumens can comprise the same size and shape, and in some embodiments, some or all of the plurality of lumens can comprise different sizes and shapes. In some embodiments, for example, the plurality of lumens can comprise a lumen sized and/or shaped to receive a guide wire and a lumen sized and/or shaped to receive a tool. The tubular member extends at least partially through a constricting mechanism. The constricting mechanism can be moved from a first configuration to a second configuration, and the constricting mechanism can collapse and/or seal the central lumen of the tubular member when the constricting mechanism is in the first configuration. The constricting mechanism creates the above-discussed robust seal of the tubular member and thus of the valve.

With reference now to FIG. **1**, a perspective view of one embodiment of a delivery system **100**, also referred to herein as a delivery device **100**, is shown. The delivery system **100** can include a catheter **102** and a garrote valve **104**, also referred to herein as valve **104**. The catheter **102** can comprise a shaft **106**, also referred to herein as an elongate sheath **106**, having a proximal end **108**, also referred to herein as a first end **108**, that can connect to the valve **104** and a distal end **110**, also referred to herein as a second end **110**. The shaft **106** can define a catheter lumen **112** extending from the proximal end **108** of the shaft **106** to the distal end **110** of the shaft **106**. The catheter **102** and specifically the shaft **106** can comprise a variety of shapes and sizes and can be made from a variety of materials. In some embodiments, the catheter **102** can be flexible and/or can be made from a biocompatible material. The elongate sheath **106** can have an outer diameter of at least 4 French, at least 6 French, at least 8 French, at least 10 French, at least 12 French, at least 14 French, at least 18 French, at least 20 French, at least 22 French, between 4 French and 30 French, between 8 French and 24 French, between 12 French and 20 French, and/or any other or intermediate size.

The valve **104** can include an outer shell **114**. The outer shell **114** can comprise a variety of shapes and sizes and can be made from a variety of materials. In some embodiments, the outer shell **114** can be made from one or several polymers or composites. The outer shell **114** can include features that allow interaction with and/or control of the valve **104** to move the valve **104** between the first configuration and the second configuration.

The outer shell **114** can include a proximal cap **116** located at a proximal end **118** of the outer shell **114** and a distal cap **120** located at a distal end **122** of the shell **114**. The proximal cap **116** can include and/or house a proximal aperture **124**, also referred to herein as a proximal channel **124**, a first channel **124**, or a first aperture **124**, that extends through the proximal cap **116**, and the distal cap **120** can include and/or house a distal aperture **126**, also referred to herein as a distal channel **126**, a second channel **126**, or second aperture **126**, that extends through the distal cap **120**. As seen in FIG. **1**, the distal cap **120** connects to the shaft **106** of the catheter **102** at the distal end **122** of the valve **104**.

The proximal cap **116** and the distal cap **120** are connected via a housing **128**. The housing **128** can be a one-piece housing **128** or a multi-piece housing **128**. In the embodiment depicted in FIG. **1**, the housing comprises a two-piece housing **128**. The housing **128** can be configured to receive

and couple with each of the proximal cap **116** and the distal cap **120**, and as seen in FIG. **1**, the housing **128** is coupled with each of the proximal cap **116** and the distal cap **120** to secure the relative position of the proximal cap **116** and the distal cap **120** with respect to each other.

The housing **128** can define an interior channel **130** through which an elongate member **132**, also referred to herein as a tubular member **132**, a septum **132**, or a tubular septum **132**, can extend and connect the proximal cap **116** and the distal cap **120**. The elongate member **132** can comprise a variety of shapes and sizes and can be made from a variety of materials. In some embodiments, the elongate member **132** can comprise a compliant tubular structure that can be, for example, a thin-walled compliant tubular structure. The thin-walled structure of the elongate member **132** can facilitate the collapse, and specifically the uniform collapse of the elongate member **132** and the sealing of the elongate member **132**. In some embodiments, the elongate member **132** is an elastic, resilient material that may comprise a polymer including either a natural or synthetic polymer. In some embodiments, the elongate member can comprise an elastic, resilient material that may comprise silicone, urethane, ethylene-vinyl acetate, natural or synthetic rubber or other elastomers known in the art. In some embodiments, the elongate member **132** can comprise a silicone tube.

The elongate member **132** can comprise a proximal end **134**, also referred to herein as a first end **134**, that can couple to the proximal cap **116**, and a distal end **136**, also referred to herein as a second end **136**, that can couple to the distal cap **120**. The elongate member **132** can define a central lumen **138** that can extend from the first end **134** to the second end **136** of the elongate member **132**. The elongate member **132** can be coupled to the proximal cap **116** such that the central lumen **138** is fluidly coupled with the proximal aperture **124** of the proximal cap **116**, and the elongate member **132** can be coupled to the distal cap **120** such that the central lumen **138**, as seen in FIG. **2** and in FIG. **3**, is fluidly coupled with the distal aperture **126** of the distal cap **120**.

The central lumen **138** of the elongate member **132** can be defined by a wall of the elongate member **132** that can have a thickness that is uniform along the length of the elongate member **132** between the first end **134** and the second end **136**, or that is non-uniform along the length of the elongate member **132** between the first end **134** and the second end **136**. In some embodiments, the wall can have a thickness that is approximately between 0.005 inches and 0.05 inches, and/or approximately between 0.010 inches and 0.030 inches. As used anywhere herein, "approximately" refers to a range of +/−10% of the value and/or range of values for which "approximately" is used.

In some embodiments, the elongate member **132** can be cylindrically shaped, and specifically can be circular-cylindrically shaped. In some embodiments, the elongate member **132** can be dog-bone shaped to facilitate, for example, connection to each of the proximal cap **116** and the distal cap **120**. In some embodiments, the elongate member **132** can include one or several outward-extending protuberances that engage with all or portions of a constricting mechanism **141**, also referred to herein as a tensioning mechanism **141**, of the valve **104** to secure a position of all or portions of the constricting mechanism **141** with respect to the elongate member **132**. In some embodiments, the constricting mechanism **141** can be self-adjusting to seal around tools of different sizes extending through the valve **104**.

The constricting mechanism **141** can, in some embodiments, collapse and seal the elongate member **132** via compression and/or constriction, and specifically via constriction with at least one filament **150**. The constricting mechanism **141** can comprise: an actuator **142** which can be a manual actuator such as one or several buttons **144**; and the at least one filament **150** that can extend at least partially around the elongate member **132**. In some embodiments, the use of the constricting mechanism **141** can facilitate sealing of the valve around tools or instruments of a wide range of sizes and/or diameters, and particularly around tools or instruments that fit through the elongate member **132**.

The housing **128** can further include one or several retention features **140**. The one or several retention features **140** of the housing can engage with and retain all or portions of the constricting mechanism **141** of the valve **104**. In some embodiments, the one or several retention features **140** of the housing **128** can retain the actuator **142** and/or can couple the actuator **142** to the housing **128**. The actuator **142** can comprise any desired type of actuator including, for example, a manual actuator and/or an automated actuator such as, for example, an electromechanical actuator including a solenoid-based actuator. In some embodiments, the actuator can comprise one or several buttons **144**, and specifically, as depicted in FIG. **1**, the actuator **142** can comprise a first button **144**-A and a second button **144**-B. Alternatively, and as depicted in FIG. **5**, the actuator **142** can comprise a single button **144**. In such an embodiment, the filament **150** can be coupled to the single button **144** and to a portion of the housing **128** such as, for example, to grip portion **500** of the housing **128** such that the movement of the single button **144** causes the sealing and/or opening of the elongate member **132** and of the valve **104**.

The actuator **142** can be biased towards a configuration such as, for example, biased towards the first configuration or biased towards the second configuration. As depicted in FIG. **2**, which shows the constricting mechanism **141** in the first configuration, the actuator **142** can be biased towards the first configuration wherein the elongate member **132** is collapsed and/or sealed by a bias feature **146**. In this first configuration, the buttons **144** can be in a first position, also referred to herein as an undepressed position. This bias feature **146** can, as shown in FIG. **2**, include a first spring **148**-A configured to bias the first button **144**-A towards the first position corresponding to the first configuration of the constricting mechanism **141**, and a second spring **148**-B configured to bias the second button **144**-B towards a first position corresponding to the first configuration of the constricting mechanism **141**. One or both of the first spring **148**-A and the second spring **148**-B can comprise a tension spring, compression spring, a torsion spring, a coil spring, or any other desired type of spring.

In some embodiments, one or both of the first spring **148**-A and the second spring **148**-B can generate sufficient force so as to allow actuation of the actuator **142** with a single hand and so as to collapse and seal the elongate member **132** when the constricting mechanism **141** is in the first configuration. In some embodiments, one or both of the first spring **148**-A and the second spring **148**-B can generate a force of: at least 0.1 pounds, at least 0.2 pounds, at least 0.3 pounds, at least 0.4 pounds, at least 0.5 pounds, at least 0.6 pounds, at least 0.7 pounds, at least 0.8 pounds, at least 0.9 pounds, at least 1 pound, at least 1.5 pounds, at least 2 pounds, at least 3 pounds, at least 5 pounds, and/or at least 10 pounds and in some embodiments one or both of the first spring **148**-A and the second spring **148**-B can generate a

force approximately between: 0.1 and 10 pounds, 0.1 and 5 pounds, 0.1 and 1.5 pounds, 0.2 and 1 pounds, and/or 0.4 and 0.8 pounds.

The constricting mechanism **141** can include at least one filament **150** that extends at least partially around the elongate member **132**. In some embodiments, the at least one filament **150** can circumferentially constrict the elongate member **132** to collapse and seal the elongate member **132** when the constricting mechanism **141** is in the first configuration. The filament can be made from a variety of materials including, for example, a polymer, a synthetic, and/or a metal. In some embodiments, the filament **150** can be nylon, stainless steel, nitinol, silicone, or the like. In some embodiments, the filament can comprise a single strand such as, for example, a monofilament, and in some embodiments, the filament can comprise a plurality of strands that can be, for example, twisted, woven, grouped, and/or fused to form the filament. In some embodiments, the filament **150** can comprise one or several threads, lines, cords, rope, ribbon, flat wire, sheet, or tape.

The filament **150** can be coupled to the actuator **142** such that the filament **150** selectively constricts, collapses, and/or seals the elongate member **132**, and specifically the central lumen **138** of the elongate member **132** based on the movement and/or position of the actuator **142**. In some embodiments, the filament **150** can be connected to one or both of the buttons **144**-A, **144**-B such that the filament **150** collapses, constricts, and/or seals the elongate member **132** and specifically the central lumen **138** of the elongate member **132** when the buttons **144**-A, **144**-B are in the first position, and the filament **150** can be connected to one or both of the buttons **144**-A, **144**-B such that the elongate member **132** and specifically the central lumen **138** of the elongate member **132** is open and uncollapsed when the buttons **144**-A, **144**-B are in the second position. In some embodiments in which the actuator **142** comprises a single button **144**, as depicted in FIG. **5**, the filament **150** can be connected to the button **144** and to the housing **128** such that the filament **150** is tightened when the button **144** moves to the first position.

In some embodiments, the at least one filament **150** can extend along an axis **152** that can be perpendicular to a central axis **154** of the elongate member **132** and/or of the apertures **124**, **126**. In some embodiments, the axis **152** of the at least one filament **150** can intersect and be perpendicular to the central axis **154** of the elongate member **132** and/or of the apertures **124**, **126**. In some embodiments, the actuator **142**, and specifically the buttons **144**-A, **144**-B can move along this axis **152** when moved from the first position to the second position.

In FIG. **3**, an embodiment of the valve **104** with the constricting mechanism **141** in the second configuration is shown. As specifically shown, both of the first and second buttons **144**-A, **144**-B are in the second position, depressed into the retention features **140** of the housing **128**. In this second position, the filament **150** is loosened, thereby allowing the expansion of the elongate member **132** and the unsealing of the central lumen **138** of the elongate member **132**.

As further seen in FIG. **3**, the proximal cap **116** has a proximal end **300** and a distal end **302**. The proximal cap **116** can include a funnel portion **301** of the proximal aperture **124**, which funnel portion **301** can facilitate insertion of a tool into the proximal aperture **124**. The distal end **302** of the proximal cap **116** can partially extend into the interior channel **130** of the housing **128**. The proximal cap **116** can include a mating feature **304** that can mate with the proximal end **134** of the elongate member **132**. In some embodiments, the proximal end **134** of the elongate member **132** can fit over the mating feature **304** of the proximal cap **116**. The proximal end **134** of the elongate member **132** can be compressed between the mating feature **304** of the elongate member **132** and a portion of the interior channel **130** of the housing **128** into which the mating feature **304** is inserted to thereby secure the proximal end **134** of the elongate member **132** on the mating feature **304**. In some embodiments, the proximal end **134** of the elongate member **132** can be further secured on the mating feature **304** by a proximal O-ring **306** that can be compressed between the housing **128** and the mating feature **304** of the proximal cap **116** to sealingly couple the elongate member **132** to the proximal cap **116**.

The distal cap **120** has a proximal end **308** and a distal end **310**. The distal cap can include a mating feature **312** located on the proximal end **308** of the distal cap **120**, which mating feature **312** can mate with the distal end **136** of the elongate member **132**. In some embodiments, the distal end **136** of the elongate member **132** can fit over the mating feature **312** of the distal cap **123**. The distal end **136** of the elongate member **132** can be compressed between the mating feature **312** of the elongate member **132** and a portion of the interior channel **130** of the housing **128** into which the mating feature **312** is inserted to thereby secure the distal end **136** of the elongate member **132** on the mating feature **312**. In some embodiments, the distal end **136** of the elongate member **132** can be further secured on the mating feature **312** by a distal O-ring **314** that can be compressed between the housing **128** and the mating feature **312** of the proximal cap **116** to sealingly couple the elongate member **132** to the distal cap **120**.

The distal cap **120** can, in some embodiments, further include a side port barb **314** that can extend laterally away from the distal cap **120** and specifically away from the distal aperture **126** of the distal cap **120**. The side port barb **314** can define a side port channel **316** that can extend through the side port barb **314** and fluidly connect to the distal aperture **126**. In some embodiments, the side port barb **314** can include a securement feature **318** such as a barb that can secure coupling of a hose or tube to the side port barb **314**.

In some embodiments, the side barb **314** can be used to apply a vacuum to the portions of the delivery device **100**, and particularly to portions of the delivery device **100** that are distal of the axis **152** along which the elongate member **132** seals. This vacuum can be applied to aspirate a material through the delivery device **100**, and specifically through the catheter **102** of the delivery device. This aspirated material can be a biological material including, for example, bodily fluids, multi-phase bodily materials that can include, for example, a fluidic portion and at least one solid portion, or the like.

In some embodiments, due to the narrowing shape of the elongate member **132** when the constricting mechanism **141** is in the first configuration, a vacuum applied to the portions of the delivery device **100** distal to the axis **152** draws the elongate member **132** towards the first configuration and can, in some embodiments, increase the strength, robustness, and/or strength of the seal of the valve **104**. This attribute of the valve **104** can provide benefits over other valve designs in which a vacuum can compromise the seal of the valve, and thus the ability to draw a vacuum and aspirate can be limited.

In some embodiments, the valve **104** can further include a reinforcement structure **320** that can extend along all or portions of the elongate member **132**. The reinforcement structure **320** can facilitate the uniform collapse of the

elongate member **132**, can prevent the at least one filament **150** from cutting through and/or tearing the elongate member **132**, and can assist in guiding one or several tools through the elongate member **132**. The reinforcement structure **320** can be tubular, can extend along and around the elongate member **132**, and can be positioned so as to be between the elongate member **132** and the at least one filament **150**.

The reinforcement structure **320** can include a proximal end **322** and a distal end **324**. In some embodiments, the reinforcement structure **320** extends along and around the elongate member **132**, and is positioned such that the proximal end **322** of the reinforcement structure **320** is proximate to the first end **134** of the elongate member **132** and the distal end **324** of the reinforcement structure **320** is proximate to the second end **136** of the elongate member **132**.

The reinforcement structure **320** can be coupled to the elongate member **132**. In some embodiments, the reinforcement structure **320** is coupled to the elongate member **132** along the length of the reinforcement structure **320**, and in some embodiments, the reinforcement structure **320** is coupled to the elongate member **132** and distinct positions along the length of the elongate member **132** and/or the reinforcement structure **320**. In one embodiment, for example, the reinforcement structure **320** can be coupled to the elongate member **132** at one or both of the proximal end **322** of the reinforcement structure **320** and the distal end **324** of the reinforcement structure **320** and/or at one or both of the first end **134** and the second end **136** of the elongate member **132**. In some embodiments, the reinforcement structure **320** can be coupled to the elongate member **132** via one or several other components of the valve **104**. In some embodiments, the reinforcement structure **320** can be coupled to the elongate member **132** via the compression of the reinforcement structure **320** and the elongate member **132** between the housing **128** and one or both of the proximal **116** and the distal **120**.

In some embodiments, the reinforcement structure **320** can be adhered to the elongate member **132** via, for example, an adhesive such as silicone adhesive. In some embodiments, the adhesive can be circumferentially applied to the reinforcement structure **320** and/or the elongate member **132** in an adhesive ring that can, for example, a have a length approximately between: 0.010 inches and 0.5 inches; 0.02 and 0.4 inches; 0.050 inches and 0.0250 inches, or any other or intermediate range.

In one embodiment, each of the proximal end **322** and the distal end **324** of the reinforcement structure **320** can be adhered via an adhesive to the elongate member **132**. In such an embodiment, the reinforcement structure **320** may be uncoupled to the elongate member **132** at positions other than the coupling at one or both of the proximal end **322** and the distal end **324** of the reinforcement structure **320**, and thus the reinforcement structure **320** is uncoupled to the elongate member **132** at a position between the first end **134** and the second end **136** of the elongate member **134** and/or between the proximal end **322** and the distal end **324** of the reinforcement structure **320**.

The lack of coupling of the reinforcement structure **320** to the elongate member **132** can facilitate and improve the collapse of the elongate member **132** around a tool **400**, also referred to herein as instrument **400** or device **400**, inserted through the valve **104** as shown in FIG. **4**. The tool **400** can be any device inserted through the valve **104** including, for example, one or several additional catheters, lines, wires, grippers, punches, cutters, or the like. As seen in FIG. **4**, the tool **400** is inserted through the valve **104** and specifically through the elongate member **132** of the valve. As shown, the constricting mechanism **141** is in the first configuration and the elongate member **132** and the central lumen **138** of the elongate member **132** is collapsed around the tool **400**, and specifically around a shaft **402** of the tool **400** to thereby seal the valve **104** around the tool **400** and specifically around the shaft **402** of the tool **400**. The constricting mechanism **141** can seal around tools **400** that fit through the elongate member **132**, regardless of the size of the tool **400**. Thus, the valve can be used with a wide variety of tools. More specifically, the at least one filament **150** can include (i) a first portion **491** extending around at least a portion of the elongate member **132** and (ii) a second portion **492** having a first end **493**-A extending from the first portion **491** in one direction and a second end **493**-B extending from the first portion **491** in another direction. The first button **144**-A can be coupled to the first end **493**-A of the at least one filament **150** and the second button **144**-B can be coupled to the second end **493**-B of the at least one filament **150**. In the illustrated first configuration, the at least one filament **150** circumferentially constricts the elongate member **132** to create a seal between the elongate member **132** and the tool **400**. The buttons **144**-A, **144**-B are moveable to the second configuration wherein the at least one filament **150** is moved to at least partially open the central lumen **138** of the elongate member **132**.

The reinforcement structure **320** can comprise a variety of designs, shapes, sizes, and materials. In some embodiments, the reinforcement structure **320** can be sized and shaped so as to receive elongate member **132** and to be positioned between the elongate member **132** and the at least one filament **150**. In some embodiments, the reinforcement structure **320** can be made from a material sufficiently strong to prevent the cutting of the at least one filament **150** through the elongate member **132**.

In some embodiments, the reinforcement structure can comprise a coil or a mesh sheath. The mesh sheath can, in some embodiments, comprise a braided mesh. The braided mesh can be made from any desired number of wires in any desired configuration. In some embodiments, the braided mesh can comprise a 4 wire braided mesh, an 8 wire braided mesh, a 12 wire braided mesh, a 16 wire braided mesh, a 20 wire braided mesh, a 24 wire braided mesh, a 32 wire braided mesh, a 48 wire braided mesh, a 64 wire braided mesh, a 72 wire braided mesh, an 80 wire braided mesh, a 96 wire braided mesh, or any other or intermediate braided mesh. In some embodiments, the braided mesh can comprise: a 1×1 configuration. In some embodiments, the wire in the braided mesh can be any desired material including, for example, a metal wire such as a nitinol wire or a stainless steel wire, a polymer wire, or a natural wire. In one embodiment, the braided mesh can comprise a 48 wire mesh in a 1×1 configuration made with a nitinol wire having a diameter of 0.003 inches.

With reference now to FIGS. **6** through **9**, different embodiments and/or configurations of the filament **150** are shown. The filament **150** can comprise a single filament **150** having a first end **600** and a second end **602** as shown in FIG. **6**. The filament **150**, and specifically which first and second ends **600**, **602** can be coupled to the actuator **142** to move the filament **150** between the first and second configurations or positions and/or from the first configuration or position to the second configuration or position. In some embodiments, both of the first end **600** and the second end **602** can be coupled to a single button **144**, in some embodiments, each of the first end **600** and the second end **602** can be coupled

to different buttons **144**, and in some embodiments, one of the first end **600** and the second end **602** can be coupled to a button **144** and the other of the first end **600** and the second end **602** can be coupled to the housing **128** or other portion of the valve **104**.

In some embodiments, the filament **150** can comprise multiple filaments, and specifically, as shown in FIGS. **7** through **9**, the filament **150** can comprise a first filament **150**-A and a second filament **150**-B. In embodiments in which the filament **150** comprises multiple filaments, each of the multiple filaments can have a first end **700** and a second end **702**. The first and second filaments **150**-A, **150**-B can be coupled to the actuator **142**. In such embodiments, the first and second ends **700**, **702** can be coupled to the actuator **142** to move the filaments **150**-A, **150**-B between the first and second configurations and/or from the first configuration to the second configuration. In some embodiments, both of the first end **700** and the second end **702** of one or more of the multiple filaments **150** can be coupled to a single button **144**, in some embodiments, each of the first end **700** and the second end **702** of one or more of the multiple filaments **150** can be coupled to different buttons **144**, and in some embodiments, one of the first end **700** and the second end **702** of one or more of the multiple filaments **150** can be coupled to one button **144** and the other of the first end **700** and the second end **702** of those one or more filaments **150** can be coupled to the housing **128** or other portion of the valve **104**.

The filament **150** can be arranged in a variety of configurations. In some embodiments, the filament **150** can be configured to form a single loop **604** that can extend around the elongate member **132** and/or through which the elongate member **132** can be received as shown in FIG. **6**, and in some embodiments, the filament **150** can be configured to form multiple loops, and specifically a first loop **704** and a second loop **706** as shown in FIG. **7**. The first and second loops **704**, **706** can each receive the elongate member **132**. In some embodiments, a diameter or size of the loop **604**, or of the loops **704**, **706** can decrease when the constricting mechanism **141** is moved from the second configuration to the first configuration.

In some embodiments, the filament **150** can be configured to form a bight **800**, which bight **800** can be a single bight or multiple bights. As used herein, a "bight" refers to a U-shaped section between the two ends of the filament **150**. As depicted in FIGS. **8** and **9**, the bight **800** can comprise multiple bights, and specifically a first bight **800**-A and a second bight **800**-B. In some embodiments, the first bight **800**-A can extend through the second bight **800**-B such that the first and second bights **800**-A, **800**-B interlock, whereas in other embodiments, the first and second bights **800**-A, **800**-B can be non-interlocking. Similarly, in embodiments containing the filament **150** having multiple loops, one or several of the multiple loops can be interlocking.

In some embodiments, the bight **800**, and specifically one or both of the first bight **800**-A and the second bight **800**-B can be formed around a portion of the elongate member **132** and/or can extend around a portion of the elongate member **132**. Each bight **800** can define a partially enclosed receiving area **808** wherein the elongate member **132** can be received. Thus, the first bight **800**-A can define a first receiving area **808**-A and the second bight **800**-B can define a second receiving area **808**-B.

As seen in FIGS. **8** and **9**, multiple bights, and specifically the first and the second bights **800**-A, **800**-B can be positioned and oriented such that the first bight **800**-A has a first orientation or first direction as indicated by arrow **810**, and the second bight has a second orientation or second direction as indicated by the arrow **812**. In some embodiments, the first orientation is different from the second orientation such that the first and second receiving areas **808**-A, **808**-B overlap and define an encircled area **814**, also referred to herein as a constricting area **814**. The elongate member **132** can be received within the encircled area **814**. In embodiments in which bights **800**-A, **800**-B overlap to define the encircled area **814**, the movement of the constricting mechanism **141** to the first configuration can result in and/or include the first bight **800**-A moving in the direction indicated by the arrow **810** and/or the second bight **800**-B moving in the direction indicated by the arrow **812**, which movement of the bights **800**-A, **800**-B decreases the size of the encircled area **814** and constricts, collapses, and/or seals the elongate member **132** extending through the encircled area **814**.

The filament(s) **150** forming the bights **800** can each apply an arcuate line or narrow longitudinal zone of pressure to the elongate member **132**. If the filament(s) are circular in cross-section, the zone of pressure can be very small, and can, in some embodiments, be less than the diameter or thickness of the filament. In some embodiments, the filaments have a diameter or width less than about 2.5 mm, less than about 2 mm, less than about 1.5 mm, less than about 1.25 mm, less than about 1 mm, less than about 0.75 mm, less than about 0.5 mm, and/or less than about 0.25 mm. In some embodiments, the filaments can have a diameter or width of between about 0.01 mm and 2.5 mm, between about 0.05 mm and 2 mm, between about 0.1 mm and 1 mm, and/or between about 0.125 mm and 0.70 mm. In some embodiments, the arcuate line or zone of pressure may form two opposing arcs and in other embodiments, the arcuate line of pressure may be a singular substantially circular line or zone that encircles the elongate member at least once. The longitudinal length of the of the line or zone of pressure may be very short compared to other valves known in the art. In some embodiments, the longitudinal length of the zone of pressure applied to the elongate member **132** by the filament (s) **150** may be less than about 2.0 mm and in some embodiments less than about 0.5 mm. In some embodiments, the filament(s) **150** can have any desired cross-sectional shape including, for example, a circular cross-section, a rectangular cross-section, an oval cross-section, a square cross-section, a polygonal cross-section, a triangular cross-section, or any other desired shape of cross-section.

With reference now to FIG. **10**, a flowchart illustrating one embodiment of a process **1000** for sealing a valve **104** and/or catheter **102** accessing a body of a patient is shown. The process **1000** can be performed using the valve **104** and/or the delivery system **100**. The process **1000** begins at block **1002**, wherein the delivery device **100**, and specifically the catheter **102** of the delivery device **100** is inserted into the body of the patient. In some embodiments, this can include inserting the catheter **102** into a portion of the circulator system of the patient such as, for example, a blood vessel including an artery or a venous vessel. In some embodiments, the delivery device **100** can be inserted into the body of the patient directly through an aperture or incision in the patient, and in some embodiments, the delivery device **100** can be inserted into the body of the patient via another catheter or device. In some embodiments, the constricting mechanism **141** can be in the first configuration while the delivery device **100** and/or the catheter **102** is inserted into the patient's body.

After the delivery device **100** is inserted into the body of the patient, the process **1000** proceeds to block **1004**,

wherein the constricting mechanism **141** is moved from the first configuration to the second configuration. As described above, the central lumen **138** of the elongate member **132** is unsealed when the constricting mechanism **141** is in the second configuration. In some embodiments, the moving of the constricting mechanism **141** from the first configuration to the second configuration can include the manipulation of the actuator **142** and/or the control of the actuator **142**, and specifically the depressing of the one or several buttons **144** to move the filament **150** from the first position to the second position to allow the expansion and opening of the central lumen **138** of the elongate member **132**.

After the constricting mechanism **141** is moved from the first configuration to the second configuration, the process **1000** proceeds to block **1006**, wherein the tool **400**, and specifically the shaft **402** of the tool **400** is advanced through the delivery device **100** and specifically through the valve **104** until a first end of the tool reaches a desired position within the body of the patient. In some embodiments, a portion of the shaft **402** can be positioned within the central lumen **138** of the elongate member **132** after the advancing of the tool **400** through the delivery device **100**. In some embodiments, after the tool **400** is advanced through the delivery device **100**, the desired procedure can be performed with the tool.

After the tool **400** is advanced through the delivery device **100**, or while the tool **400** is being advanced through the delivery device **100**, the process **1000** proceeds to block **1008**, wherein the constricting mechanism **141** is returned to the first configuration. In some embodiments, the returning of the constricting mechanism **141** to the first configuration can include the release of the one or several buttons **144** and/or the control of the actuator **142** to reconfigure the constricting mechanism **141** to the first configuration. In some embodiments, the return of the constricting mechanism **141** to the first configuration can result in the collapse and/or sealing of the elongate member **132** and specifically the central lumen **138** of the elongate member **132** around the tool **400** and specifically around the shaft **402** of the tool **400**. The return of the constricting mechanism **141** to the first configuration, or the movement of the constricting mechanism **141** to the first configuration can include the decreasing of the size and/or diameter of one or several loops formed by the filament **150** and/or the movement of one or several bights **800** such as, for example, the movement of the first bight **800**-A in the first direction indicated by arrow **810** and the movement of the second bight **800**-B in the second direction indicated by arrow **812** to reduce the size of the constricting area **814**. In some embodiments, after the constricting mechanism is returned to the first configuration, the desired procedure can be performed with the tool.

After the constricting mechanism is returned to the first configuration, the process **1000** proceeds to block **1010**, wherein the tool **400**, and specifically the shaft **402** of the tool **400** is retracted from the delivery device **100**, and more specifically from the valve **104**. In some embodiments, the valve **104** can remain sealed during the retracing of the tool **400** and/or the shaft **402** of the tool. In some embodiments, the valve **104** remains sealed during the retracting of the tool **400** and/or the retracting of the shaft **402** of the tool **400** as the constricting mechanism **141** can remain in the first configuration during the retracing of the tool **400** and/or the shaft **402** of the tool **400**.

In some embodiments, the constricting mechanism **141** can be moved to the second configuration to allow the retraction of the tool **400** and/or the shaft **402** of the tool **400** from the valve **104**, and the constricting mechanism **141** can be returned to the first configuration when the tool **400** and/or the shaft **402** of the tool **400** is removed from the valve **104**. In some embodiments, the retraction of the tool **400** and/or shaft **402** of the tool **400** from the valve **104** can be performed with the constricting mechanism **141** left in the first configuration. In some embodiments, the constricting mechanism **141** can be moved to the second configuration, and then returned to the first configuration via the manipulation and/or control of the actuator **142**, which manipulation and/or control of the actuator **142** can include the depressing of the one or several buttons **144** to move the constricting mechanism **141** to the second configuration, and the release of the one or several buttons **144** to return the constricting mechanism **141** to the first configuration. In some embodiments, if the procedure is complete, the delivery device **100** can then be removed from the body of the patient, and any incision created for the procedure can be closed.

With reference now to FIG. **11**, a side view of one embodiment of a thrombectomy system **1100** including the delivery device **100** and a thrombus extraction device **1102** is shown. In some embodiments, the thrombectomy system **1100** can be used to access a blood vessel **1104** to treat and/or extract a thrombus **1106** from the blood vessel **1104**. The thrombus extraction device **1102** can include a self-expanding coring element **206** and expandable cylindrical portion **208**. In some embodiments, and as shown in FIG. **11**, the thrombus extraction device **1102** can be the tool **400** that can extend through the valve **104**, and in some embodiments, the valve **104** can be a part of the thrombus extraction device **1102**. Further details of thrombectomy systems, thrombus extraction devices, and methods of using the same are disclosed in: U.S. application Ser. No. 15/268,296, filed Sep. 16, 2016, and entitled "INTRAVASCULAR TREATMENT OF VASCULAR OCCLUSION AND ASSOCIATED DEVICES, SYSTEMS, AND METHODS"; U.S. application Ser. No. 15/498,320, filed Apr. 26, 2017, and entitled "DEVICES AND METHODS FOR TREATING VASCULAR OCCLUSION"; and U.S. application Ser. No. 15/466,740, filed on Mar. 22, 2017, and entitled "DEVICE AND METHOD FOR TREATING VASCULAR OCCLUSION", the entirety of each of which is hereby incorporated by reference herein.

With reference now to FIG. **12**, a side-section view of another embodiment of the hemostasis valve **104** having two piece caps **116**, **120** is shown. The valve **104** can include a housing **128** defining an interior channel **130** through which the tubular member **132** can extend. The valve **104** can include the proximal cap **116** and the distal cap **120**. In some embodiments, the proximal cap **116** can comprise a two piece cap and can include a proximal exterior member **1200** and a proximal channel member **1202**. In some embodiments, the distal cap **120** can comprise a two-piece cap and can include a distal exterior member **1204** and a distal channel member **1206**. In some embodiments, this coupling between the proximal exterior member **1200** and the proximal channel member **1202** and/or the coupling between the distal exterior member **1204** and the distal channel member **1206** can be a sealed coupling so as to prevent the leakage of material including fluid or gas between the respective ones of the proximal exterior member **1200** and the proximal channel member **1202** and/or the distal exterior member **1204** and the distal channel member **1206**. In some embodiments, this sealing coupling can be achieved and/or maintained via a seal such as an O-ring **1208** that can be positioned between the proximal exterior member **1200** and

the proximal channel member **1202** and/or between the distal exterior member **1204** and the distal channel member **1206**.

In some embodiments, the proximal exterior member **1200** can be coupled, and in some embodiments, rotatingly coupled to the proximal channel member **1202** in a manner to allow the rotation of the proximal exterior member **1200** without rotating the proximal channel member **1202**. Similarly, in some embodiments, the distal exterior member **1204** can be rotatingly coupled to the distal channel member **1206** in a manner to allow the rotation of the distal exterior member **1204** without the rotating of the distal channel member **1206**. In some such embodiments, the channel members **1202**, **1206** can be non-rotatable with respect to the housing **128** and/or the tubular member **132**, and one or both of the exterior members **1200**, **1204** can be rotatable with respect to the housing **128** and/or the tubular member **132**. In such an embodiment, the maintaining of the rotational position of the channel members **1202**, **1206** with respect to the housing **128** and/or the tubular member **132** can prevent the twisting of the tubular member **132** which can result in the sealing of the tubular member **132** regardless of the configuration of the constructing mechanism **141**.

The exterior members **1200**, **1204** can comprise a variety of shapes and sizes and can include a variety of features. In some embodiments, one or both of the exterior members **1200**, **1204** can be coupled to, for example, a shaft similar to the shaft **106** shown in FIG. **1**. In some embodiments, for example, the distal exterior member **1204** can be coupled to a shaft **106**, including, for example, can be non-detachably coupled to the shaft **106**. In some embodiments, one or both of the exterior members can include one or several features configured to facilitate coupling with the valve **104**. These one or several features can include, for example, one or several male or female: connectors; couplers; attachment mechanisms; or the like. In some embodiments, these one or several features can facilitate use of the valve with other existing components, instruments, tools, or the like. In some embodiments, for example, one or both of the exterior members **1200**, **1204** can comprise either a male or female luer fitting, and specifically as shown in FIG. **12**, the distal exterior member **1204** can comprise a male luer fitting **1210**.

Several aspects of the present technology are set forth in the following examples.

1. A hemostatic valve for sealing a medical device, the hemostatic valve comprising:
   - an elongate member having a first end, a second end, and a central lumen extending therebetween, wherein the elongate member is pliable;
   - a reinforcement structure extending along at least a portion of the elongate member, wherein the reinforcement structure is coupled to the elongate member; and
   - an active tensioning mechanism coupled to the elongate member, wherein the tensioning mechanism is moveable between a first configuration wherein the central lumen is constricted and sealed and a second configuration wherein the central lumen is open.

2. The hemostatic valve of example 1, wherein the elongate member comprises a compliant polymer tube.

3. The hemostatic valve of example 1 or 2, wherein the tensioning mechanism comprises at least one filament extending at least partially around the elongate member.

4. The hemostatic valve of example 3, wherein the reinforcement structure is positioned between the at least one filament and the elongate member.

5. The hemostatic valve of example 4, wherein the reinforcement structure comprises a braided mesh.

6. The hemostatic valve of example 4 or 5, wherein the reinforcement structure is coupled to the elongate member at a position proximate to the first end of the elongate member and at a position proximate to the second end of the elongate member.

7. The hemostatic valve of example 6, wherein the reinforcement structure is not coupled to the elongate member at a position between the first end of the elongate member and the second end of the elongate member.

8. The hemostatic valve of any one of examples 3-7, wherein the tensioning mechanism comprises an actuator coupled to the at least one filament, wherein the actuator is moveable to control movement of the at least one filament from a first position wherein the central lumen is constricted and sealed to a second position wherein the central lumen is open, wherein the at least one filament is in the first position when the tensioning mechanism is in the first configuration.

9. The hemostatic valve of example 8, wherein the actuator is biased towards the first position.

10. The hemostatic valve of example 8 or 9, wherein the actuator is biased toward the second position.

11. The hemostatic valve of any one of examples 8-10, wherein the actuator comprises a manual actuator.

12. The hemostatic valve of any one of examples 8-11, wherein the at least one filament forms a loop around the elongate member.

13. The hemostatic valve of any one of examples 8-12, wherein the at least one filament forms a bight around a portion of the elongate member.

14. The hemostatic valve of any one of examples 8-13, wherein the at least one filament comprises a first filament and a second filament, wherein each of the first filament and the second filament are coupled to the actuator, and wherein the first filament and the second filament are moveable from the first position to the second position.

15. The hemostatic valve of example 14, wherein each of the first filament and the second filament form a loop around the elongate member.

16. The hemostatic valve of example 14 or 15, wherein the first filament forms a first bight around a first portion of the elongate member, and wherein the second filament forms a second bight around a second portion of the elongate member.

17. The hemostatic valve of example 16, wherein the first bight extends through the second bight.

18. The hemostatic valve of any one of examples 1-17, further comprising a shell defining a first aperture and a second aperture, wherein the elongate member extends from the first aperture to the second aperture and fluidly couples the first aperture and the second aperture.

19. The hemostatic valve of any one of examples 1-18, wherein the tensioning mechanism is self-adjustable to seal around tools of different sizes extending through the hemostatic valve.

20. The hemostatic valve of any one of examples 1-19, wherein the central lumen comprises a single lumen.

21. The hemostatic valve of any one of examples 1-20, wherein the central lumen comprises a plurality of lumens.

22. A delivery system for intravascular access of a blood vessel within a patient's body, the delivery system comprising:
   - a catheter having a first end, a second end, and a catheter lumen extending therebetween;
   - a hemostatic valve coupled to the first end of the catheter, the hemostatic valve comprising:
     - a tubular member having a first end, a second end, and a central lumen extending therebetween, wherein the

central lumen of the tubular member is fluidly coupled with the catheter lumen; and

an active tensioning mechanism coupled to the tubular member, the tensioning mechanism moveable between a first configuration wherein the tensioning mechanism constricts on the central lumen and the central lumen is sealed and a second configuration wherein the central lumen is open.

23. The delivery system of example 22, wherein the hemostatic valve further comprises a reinforcement structure extending along at least a portion of the tubular member.

24. The delivery system of example 22 or 23, wherein the reinforcement structure is located between the tensioning mechanism and the tubular member.

25. The delivery system of example 24, wherein the reinforcement structure comprises a braided mesh.

26. The delivery system of example 24 or 25, wherein the reinforcement structure is coupled to the tubular member at a position proximate to the first end of the tubular member and at a position proximate to the second end of the tubular member.

27. The delivery system of example 26, wherein the reinforcement structure is adhered to the tubular member at the first end of the tubular member and at the second end of the tubular member.

28. The delivery system of example 27, wherein the reinforcement structure is uncoupled to the tubular member between the first end of the tubular member and the second end of the tubular member.

29. The delivery system of any one of examples 22-28, wherein the tensioning mechanism comprises at least one filament extending at least partially around the tubular member.

30. The delivery system of example 29, wherein the tensioning mechanism comprises an actuator coupled to the at least one filament, wherein moving the tensioning mechanism from the first configuration to the second configuration comprises moving the actuator and the thereto coupled at least one filament from a first position to a second position, wherein the filament constricts and seals the central lumen of the tubular member when the filament is in the first position.

31. The delivery system of example 30, wherein the actuator comprises a manual actuator.

32. The delivery system of example 31, wherein the actuator comprises a pair of opposing and depressable buttons, wherein the buttons are biased towards an undepressed position.

33. The delivery system of example 31 or 32, wherein the central lumen is sealed when the buttons are in the undepressed position.

34. The delivery system of any one of examples 30-33, wherein the filament comprises a monofilament.

35. The delivery system of any one of examples 30-34, wherein the filament comprises at least one of: a polymer filament; or a metallic filament.

36. The delivery system of any one of examples 22-35, wherein the catheter comprises a thrombus extraction device.

37. A method of sealing a delivery device accessing a blood vessel of a patient, the method comprising:

inserting the delivery device comprising a catheter and a hemostatic valve into the blood vessel of the patient, the catheter having a first end, a second end, and a catheter lumen extending therethrough, and the hemostatic valve coupled to the first end and having a tubular member defining a central lumen fluidly coupled with the catheter lumen and a tensioning mechanism coupled with the tubular member, wherein the tensioning mechanism collapses and seals the central lumen in a first configuration and thereby seals access to the blood vessel;

moving the tensioning mechanism of the hemostatic valve to a second configuration, wherein the central lumen is open and access to the blood vessel is unsealed when the tensioning mechanism is in the second configuration;

advancing a shaft of a tool through the delivery device until a first end of the tool reaches a desired position within the blood vessel of the patient and a portion of the shaft is positioned within the central lumen of the tubular member; and

returning the tensioning mechanism of the hemostatic valve to the first configuration such that the tubular member collapses on the shaft of the tool and seals around the shaft of the tool.

38. The method of example 37, further comprising retracting the shaft of the tool from the delivery device.

39. The method of example 38, wherein the tensioning mechanism is maintained in the first configuration during and after the retracting of the shaft of the tool from the delivery device.

40. The method of example 38 or 39, wherein the tensioning mechanism is moved to the second configuration during the retracting of the shaft of the tool from the delivery device, and wherein the tensioning mechanism is returned to the first configuration after the shaft of the tool is retracted from the delivery device.

41. The method of any one of examples 37-40, wherein the tensioning mechanism comprises at least one filament extending at least partially around the tubular member, wherein the at least one filament collapses the tubular member when the tensioning mechanism is in the first configuration.

42. The method of example 41, wherein the at least one filament circumferentially constricts the tubular member to collapse the tubular member when the tensioning mechanism is in the first configuration.

43. The method of example 41 or 42, wherein the hemostatic valve comprises a reinforcement structure located between the at least one filament and the tubular member.

44. The method of any one of examples 41-43, wherein the at least one filament forms a loop around the elongate member, and wherein moving the tensioning mechanism from the second configuration to the first configuration reduces a size of the loop to thereby constrict the tubular member within the loop.

45. The method of any one of examples 41-44, wherein the filament forms at least one bight around a portion of the elongate member.

46. The method of example 45, wherein the filament comprises a first filament and a second filament, and wherein the at least one bight comprises a first bight oriented in a first direction and formed by the first filament and a second bight oriented in a second direction and formed by the second filament, wherein the first and second bights overlap to encircle a portion of the tubular member within an constricting area.

47. The method of example 46, wherein moving the tensioning mechanism from the second configuration to the first configuration comprises moving the first bight in the first direction and the second bight in the direction to reduce the size of the constricting area and collapse and seal the central lumen of the tubular member.

48. The method of any one of examples 37-47, wherein the tensioning mechanism comprises an actuator, and wherein moving the tensioning mechanism to the second configuration comprises manipulating the actuator.

49. The method of any one of examples 37-48, further comprising applying a vacuum to the delivery device to aspirate material through the catheter, wherein the central lumen remains sealed during the aspiration.

50. The method of any one of examples 37-49, wherein the tool comprises a thrombus extraction device.

51. A hemostatic valve for sealing a medical device, the hemostatic valve comprising:

an elongate member having a first end, a second end, and a central lumen comprising a plurality of lumens extending therebetween, wherein the elongate member is pliable; and

an active tensioning mechanism coupled to the elongate member, wherein the tensioning mechanism is moveable between a first configuration wherein the central lumen is constricted and sealed and a second configuration wherein the central lumen is open.

Other variations are within the spirit of the present invention. Thus, while the invention is susceptible to various modifications and alternative constructions, certain illustrated embodiments thereof are shown in the drawings and have been described above in detail. It should be understood, however, that there is no intention to limit the invention to the specific form or forms disclosed, but on the contrary, the intention is to cover all modifications, alternative constructions, and equivalents falling within the spirit and scope of the invention, as defined in the appended claims.

In the previous description, various embodiments of the present invention are described. For purposes of explanation, specific configurations and details are set forth in order to provide a thorough understanding of the embodiments. However, it will also be apparent to one skilled in the art that the present invention may be practiced without the specific details. Furthermore, well-known features may be omitted or simplified in order not to obscure the embodiment being described.

The use of the terms "a" and "an" and "the" and similar referents in the context of describing the invention (especially in the context of the following claims) are to be construed to cover both the singular and the plural, unless otherwise indicated herein or clearly contradicted by context. The terms "comprising," "having," "including," and "containing" are to be construed as open-ended terms (i.e., meaning "including, but not limited to,") unless otherwise noted. The term "connected" is to be construed as partly or wholly contained within, attached to, or joined together, even if there is something intervening. Recitation of ranges of values herein are merely intended to serve as a shorthand method of referring individually to each separate value falling within the range, unless otherwise indicated herein, and each separate value is incorporated into the specification as if it were individually recited herein. All methods described herein can be performed in any suitable order unless otherwise indicated herein or otherwise clearly contradicted by context. The use of any and all examples, or exemplary language (e.g., "such as") provided herein, is intended merely to better illuminate embodiments of the invention and does not pose a limitation on the scope of the invention unless otherwise claimed. No language in the specification should be construed as indicating any non-claimed element as essential to the practice of the invention.

Preferred embodiments of this invention are described herein, including the best mode known to the inventors for carrying out the invention. Variations of those preferred embodiments may become apparent to those of ordinary skill in the art upon reading the foregoing description. The inventors expect skilled artisans to employ such variations as appropriate, and the inventors intend for the invention to be practiced otherwise than as specifically described herein. Accordingly, this invention includes all modifications and equivalents of the subject matter recited in the claims appended hereto as permitted by applicable law. Moreover, any combination of the above-described elements in all possible variations thereof is encompassed by the invention unless otherwise indicated herein or otherwise clearly contradicted by context.

All references, including publications, patent applications, and patents, cited herein are hereby incorporated by reference to the same extent as if each reference were individually and specifically indicated to be incorporated by reference and were set forth in its entirety herein.

The invention claimed is:

1. A valve, comprising:

a tubular member defining a lumen configured to slidably receive a catheter;

a constricting mechanism including at least one filament and an actuator coupled to the filament, the filament comprising a first portion extending around at least a portion of the tubular member and a second portion having a first end extending from the first portion in one direction and a second end extending from the first portion in another direction, and the actuator comprises a first member coupled to the first end of the filament and a second member coupled to the second end of the filament, wherein the first member and the second member of the actuator are moveable between (a) a first position wherein the filament circumferentially constricts the lumen to create a seal and (b) a second position wherein the filament is moved to at least partially open the lumen; and

a biasing system configured to bias the first member and the second member to the first position.

2. The valve of claim **1** wherein the tubular member is pliable.

3. The valve of claim **1** wherein the first portion of the filament extends in a loop completely around the tubular member.

4. The valve of claim **1** wherein the first member of the actuator comprises a first button and the second member of the actuator comprises a second button, wherein the first button and the second button are undepressed in the first position, and wherein the first button and the second button are depressed in the second position.

5. The valve of claim **1** wherein, when the first member and the second member of the actuator are in the first position, the lumen of the tubular member is configured to remain constricted and sealed when a pressure differential exists between (a) a first volume outside the lumen and adjacent to a first end of the tubular member and (b) a second volume outside the central lumen and adjacent to a second end of the tubular member.

6. The valve of claim **1** wherein, when the first member and the second member of the actuator are in the first position, the lumen of the tubular member is configured to remain constricted and sealed when vacuum pressure is applied to a volume outside the lumen and adjacent to either a first end or a second end of the tubular member.

7. The valve of claim **1** wherein the lumen of the tubular member extends a long a first longitudinal axis, wherein the first member and the second member of the actuator are

movable between the first and second positions along a second longitudinal axis, and wherein the first longitudinal axis is orthogonal to the second longitudinal axis.

8. The valve of claim **1** wherein the biasing system comprises a first compression spring coupled to the first member and a second compression spring coupled to the second member.

9. The valve of claim **1** wherein, in the first position, the first member and the second member of the actuator pull the filament to circumferentially constrict the tubular member such that the lumen is constricted and sealed.

* * * * *