Trials@uspto.gov
571-272-7822

Paper: 33
Date: April 7, 2026

UNITED STATES PATENT AND TRADEMARK OFFICE

BEFORE THE PATENT TRIAL AND APPEAL BOARD

IMPERATIVE CARE, INC.,
Petitioner,

v.

INARI MEDICAL, INC.,
Patent Owner.

IPR2025-00156
Patent 11,697,012 B2

Before JEFFREY N. FREDMAN, ERIC C. JESCHKE, and TIMOTHY G. MAJORS, *Administrative Patent Judges.*

MAJORS, *Administrative Patent Judge*.

JUDGMENT
Final Written Decision
Determining All Challenged Claims Unpatentable
35 U.S.C. § 318(a)

I. INTRODUCTION

Imperative Care, Inc. ("Petitioner") filed a Petition (Paper 2, "Pet.") requesting *inter partes* review of claims 1–9 of U.S. Patent No. 11,697,012 B2 (Ex. 1001, "the '012 patent"). Pet. 1, 20–21. Inari Medical, Inc. ("Patent Owner") filed a Preliminary Response (Paper 5).

We instituted trial on April 22, 2025. Paper 6 ("Inst. Dec."). During trial, Patent Owner filed a Patent Owner Response. Paper 12 ("PO Resp."). Petitioner filed a Reply (Paper 17 ("Pet. Reply")) and Patent Owner filed a Sur-reply (Paper 24 ("PO Sur-reply")). We held an oral hearing on January 20, 2026, and a transcript of that hearing is of record. Paper 32 ("Tr.").

We have jurisdiction under 35 U.S.C. § 6(b). After considering the full record through trial, we determine that Petitioner has proved by a preponderance of the evidence that the challenged claims are unpatentable. *See* 35 U.S.C. § 316(e). Our reasoning is explained below, and we issue this Final Written Decision under 35 U.S.C. § 318(a).

II. BACKGROUND

A. Real Parties-in-Interest

Petitioner identifies itself as the real party-in-interest. Pet. 95. Patent Owner identifies itself as the real party-in-interest and states that it is a wholly-owned subsidiary of Stryker Corporation. Paper 8, 2.

B. Related Matters

The parties identify several related IPR proceedings. Pet. 95–96; Paper 8, 2–3. The related matters include the following: IPR2024-01157 (Final Written Decision entered Jan. 16, 2026, finding all challenged claims unpatentable; notice of appeal filed); IPR2024-01257 (institution denied); IPR2025-00289 (instituted and pending); IPR2025-00728 (instituted and pending); IPR2025-00989 (instituted and pending); IPR2025-01021

(instituted and pending) IPR2025-01025 (instituted and pending); IPR2025-01264 (instituted and pending); IPR2025-01562 (instituted and pending).

The parties also identify the following lawsuit involving assertion of the ’012 patent (and other related and unrelated patents): *Inari Medical Inc. v. Imperative Care, Inc.*, No. 24-cv-3117 (N.D. Cal.). Pet. 95; Paper 8, 2.[1]

In the above-referenced lawsuit, the district court denied Patent Owner’s motion for a preliminary injunction on two asserted patents, including one—the ’921 patent—in the same family as the ’012 patent. Ex. 1017 (Sept. 29, 2025, order denying motion).[2] In opposing that motion, defendant Imperative Care (i.e., Petitioner) argued that the ’921 patent’s claims are invalid as anticipated by Schaffer and/or obvious over Schaffer in combination with other prior art, including Hartley. *Id.* at 14–16. In its order, the court found that Petitioner had raised “a substantial question of validity” of the ’921 patent’s claims based on the alleged anticipation and obviousness. *Id.* at 15–17 (finding merit in Petitioner’s anticipation and obviousness challenges “alone” sufficient to preclude Patent Owner from prevailing on its motion for a preliminary injunction). That lawsuit is now stayed with the district court requiring periodic updates from the parties about the status of the related IPRs. Ex. 1027.

---

[1] Patent Owner further states that *Inari Medical, Inc. v. Inquis Medical, Inc.*, No. 24-1023-CFC (D. Del.) “may involve related issues.” Paper 8, 2.

[2] Patent Owner moved for a preliminary injunction on U.S. Patent No. 11,844,921 (“the ’921 patent”) and U.S. Patent No. 11,974,910 (“the ’910 patent”). Ex. 1017, 3 (explaining that, “[a]lthough Inari asserts many more patents in this case, for purposes of this motion,” Inari asserted infringement of only the ’921 and ’910 patents). The ’921 and ’910 patents are challenged, respectively, in related IPR2025-00728 and IPR2025-01025.

In the present IPR, Petitioner raises similar patentability challenges (e.g., anticipation by Schaffer, and obviousness over the combination of Schaffer and Hartley) against similar claims of the ’012 patent. *See infra* Section II.E. As discussed in related proceedings, there is no unexplained inconsistency between the Board’s unpatentability determinations and the district court’s ruling on the motion for preliminary injunction. IPR2024-01157 (“the 1157 IPR”), Paper 35 (Final Written Decision) at 3–4. That discussion, which we adopt, applies here as well. *Id.*

C. The ’012 Patent (Ex. 1001)

The ’012 patent is titled “Hemostasis Valves and Methods of Use.” Ex. 1001, code (54). The patent issued July 11, 2023, from an application filed July 14, 2022, and claims the priority benefit of earlier non-provisional applications and a provisional application that was filed September 6, 2017. *Id.* at codes (22), (45), (60), (63).

According to the ’012 patent, “the desire for improved patient outcomes has led to the development of hemostasis valves that facilitate minimally invasive surgery.” *Id.* at 1:30–32. “In minimally invasive surgery, small incisions are created through a blood vessel [into] which one or several catheters are inserted.” *Id.* at 1:33–35. “These catheters are moved to a position proximate to tissue, nerves, or other body structures targeted by the surgery, and then tools for performing the procedure are inserted through the lumens of some or all of these catheters.” *Id.* at 1:36–40. “To minimize blood loss, prevent delivery of air into the vasculature, and to facilitate maintenance of sterility within the patient’s body . . . , these catheters are equipped with hemostasis valves.” *Id.* at 1:41–44. The patent cites a desire for “new and improved” hemostasis valves. *Id.* at 1:59–60.

The ’012 patent discloses that “[t]he valve can include a tubular [elongate] member that can be constricted, collapsed, and/or sealed by one or several tensioning mechanisms.” *Id.* at 1:65–2:1. According to the patent, “[t]he tensioning mechanism can include at least one filament that extends around at least a portion of the tubular member,” and such “filament can interact with the tubular member to constrict, collapse, and/or seal the tubular member via manipulation of the tensioning mechanism(s).” *Id.* at 2:1–2:11 (disclosing that such valve, by action of the tensioning mechanism and filament, “can seal around a wide range of tool sizes and shapes” that are passed through the tubular member). The patent further discloses that, in embodiments, the tensioning mechanism can include an actuator coupled to the filament, which actuator can be operated to control movement of the filament from a first position (where the central lumen is constricted and sealed) to a second position (where the central lumen is un-constricted and open). *Id.* at 2:51–62. Moreover, the patent explains, an actuator can be biased toward the first or second positions. *Id.* at 2:64–67.

We reproduce below the ’012 patent’s Figure 2 including annotations provided by Petitioner, with an additional annotation from the Board.

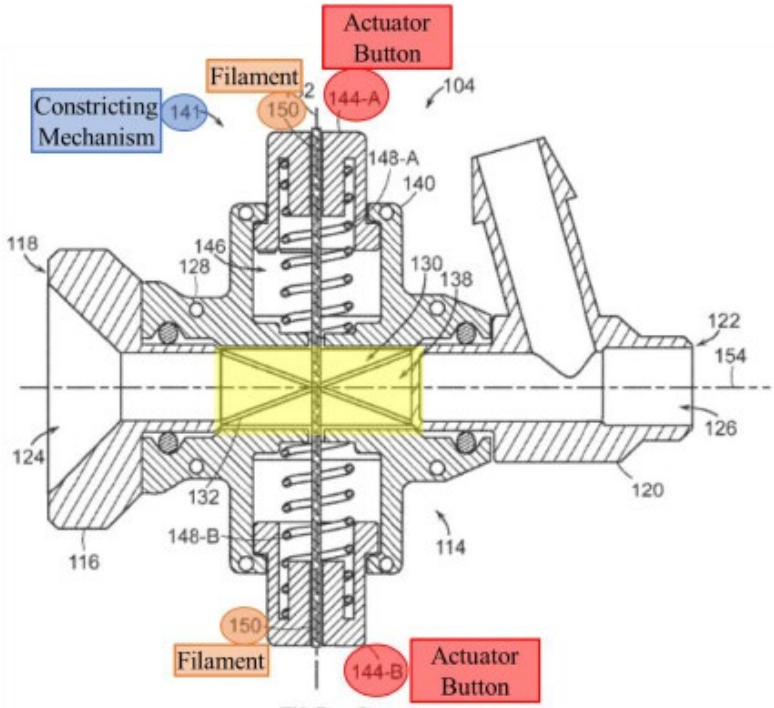

FIG. 2

Pet. 9 (yellow highlight added by Board); Ex. 1001, 8:5–56, Fig. 2.

Figure 2, as shown above, is a side cross-sectional view of an embodiment of valve (104) described in the ’012 patent. Ex. 1001, 5:29–30. The valve includes housing 128, elongate member 132 defining a central lumen 138 and having a central axis 154, constricting mechanism 141 (blue), filament 150 (orange), and oppositely disposed actuator buttons 144-A and 144-B (red). *Id.* at 8:5–9:38. In this embodiment, the filament is disposed around the elongate member and the opposing ends of the filament are coupled, respectively, to the opposing actuator buttons, which buttons are undepressed; the buttons are biased towards a first (i.e., closed) configuration by a bias feature (e.g., coil springs 148A, 148B) wherein the elongate member is collapsed and sealed in the region highlighted yellow (central lumen 138) by a tension applied to the filament by the spring-actuated buttons. *Id.* Although not shown in the figure above, when the actuator buttons are depressed, the constricting mechanism moves to a

second (i.e., open) configuration where the filament is loosened, allowing expansion of the elongate member and unsealing of the central lumen. *Id.* at 9:54–62, Fig. 3 (showing open configuration).

According to the ’012 patent, the “filament 150 can be arranged in a variety of configurations.” Ex. 1001, 13:17–18. In embodiments, the filament can comprise a “single loop 604 that can extend around the elongate member 132 and/or through which the elongate member 132 can be received as shown in FIG. 6,” or a filament may be configured to form a “U-shaped section” or “bight” as depicted in Figures 8 and 9. *Id.* at 13:30–42 (disclosing that “filament 150 can be configured to form a bight 800, which bight 800 can be a single bight or multiple bights” and “[a]s used herein, a ‘bight’ refers to a U-shaped section between the two ends of the filament 150”). The patent further discloses that the “filament can be made from a variety of materials including, for example, a polymer, a synthetic, and/or a metal.” *Id.* at 9:13–16.

Figures 6–9 of the ’012 patent are reproduced below and depict multiple filament configurations.

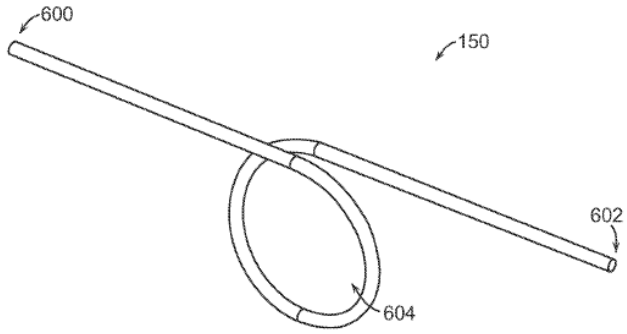

FIG. 6

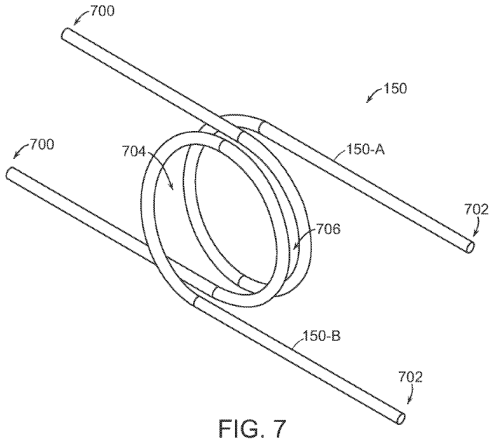

FIG. 7

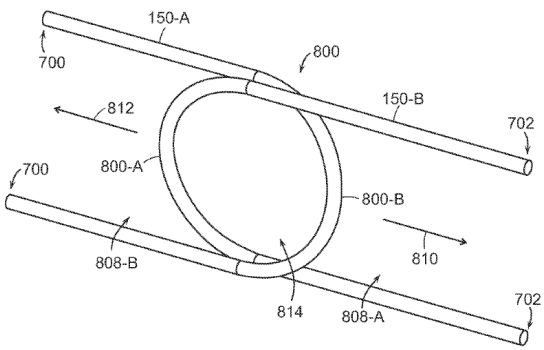

FIG. 8

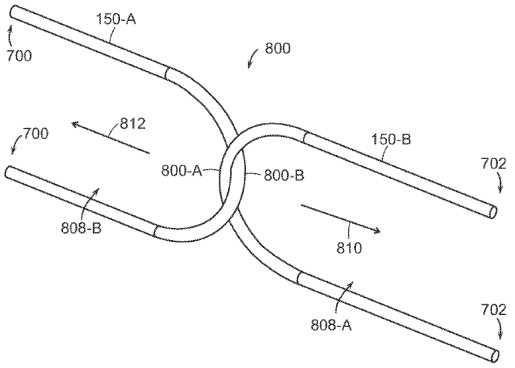

FIG. 9

Ex. 1001, Figs. 6–9. Figures 6–9 above show a variety of filament configurations, including a "single loop" (Fig. 6), or "the filament 150 can comprise multiple filaments . . . as shown in FIGS. 7 through 9." *Id.* at 13:17–25, 13:61–63 (describing "single loop 604" and "multiple loops" (704, 706) embodiments as depicted in Figs. 6 and 7, respectively).

The '012 patent discloses that, in "loop" embodiments like shown in Figures 6 and 7, a filament can be configured to form a "loop" (or "loops") "that can extend around the elongate member 132 [(not shown)] and/or through which the elongate member can be received." *Id.* at 13:19–21. Further, the patent discloses, "a diameter or size of the loop 604, or of the loops 704, 706 can decrease when the constricting mechanism 141 is moved from the second configuration to the first configuration." *Id.* at 13:26–29.

Figures 8 and 9 above depict a filament comprising first and second "bights" 800A, 800B for receiving and extending around respective portions of an elongate member. *Id.* at 13:30–51 (disclosing that the first and second bights can "interlock" or be "non-interlocking"). The "bights" 800A and 800B define an "encircled area 814" into which the elongate member can be received; movement of those bights in the directions indicated by arrows 812 and 810 "decreases the size of the encircled area 814 and constricts,

collapses, and/or seals the elongate member 132 extending through the encircled area." *Id.* at 14:1–5.

D. Illustrative Claims

Petitioner challenges claims 1–9. Claim 1 is the only independent claim. It reads:

> 1. An aspiration catheter, comprising:
>
> an elongate, flexible tubular body, having a proximal end, a distal end and a central lumen;
>
> a hemostasis valve on the proximal end of the catheter, the hemostasis valve comprising
>
> (a) a collapsible tubular sidewall defining a valve lumen in communication with the central lumen; and
>
> (b) a constricting mechanism having at least a first actuator, a first filament formed into a loop around the collapsible tubular sidewall, the filament having at least a first end portion extending away from the loop and connected to the first actuator, and a first spring configured to move the first actuator in a direction that pulls the first end portion such that a diameter of the valve lumen decreases in response to reducing a diameter of the loop.

Ex. 1001, 22:10–25.

Claim 2 depends from claim 1 and adds, *inter alia*, that "the constricting mechanism further comprises a second actuator and a second spring coupled to the second actuator" and "the filament further comprises a second end portion extending away from the loop in a different direction than the first end portion and connected to the second actuator." *Id.* at 22:26–42 (reciting further that the first and second actuator are moveable between a first (sealed) position where the filament circumferentially constricts the valve lumen, and a second (open) position).

E. Prior Art and Asserted Grounds

Petitioner asserts that claims 1–9 are unpatentable based on the following grounds:

Grounds	Claims Challenged	35 U.S.C. §[3]	Reference(s)/Basis
1	1–9	102	Schaffer[4]
2	1–9	103	Schaffer
3	1–9	103	Schaffer, Hartley[5]
4	1–9	103	Schaffer, Eller[6]
5	1–9	103	Schaffer, Garrison[7]
6	1–9	103	Schaffer, Hartley, Garrison
7	1–9	103	Schaffer, Eller, Garrison

[3] The Leahy-Smith America Invents Act ("AIA"), Pub. L. No. 112–29, 125 Stat. 284, 285–88 (2011), revised 35 U.S.C. §§ 102, 103 effective March 16, 2013. Based on the uncontested assertion that September 6, 2017, is the earliest possible priority date for the '012 patent, we apply the AIA versions of §§ 102 and 103 in this Decision. Pet. 15.

[4] Schaffer et al., US 2003/0225379 A1, published Dec. 4, 2003 (Ex. 1005 ("Schaffer")).

[5] Hartley, US 2003/0116731 A1, published June 26, 2003 (Ex. 1006 ("Hartley")).

[6] Eller, US 9,980,813 B2, issued May 29, 2018 (Ex. 1007 ("Eller")). Petitioner notes that Eller published October 29, 2015. Pet. 21; *see* Ex. 1007, code (65).

[7] Garrison et al., US 2015/0173782 A1, published June 25, 2015 (Ex. 1011, ("Garrison")).

Petitioner also relies on testimony from Troy L. Thornton in support of its challenge. Exs. 1003, 1020. In response, Patent Owner relies on testimony from Paul J. Zalesky, Ph.D. Ex. 2008.

Deposition testimony from Mr. Thornton and Dr. Zalesky is also of record. Exs. 1019, 1021 (Zalesky transcripts), 2010 (Zalesky errata); Exs. 2005, 2006, 2007, 2013, 2014 (Thornton transcripts).

III. ANALYSIS

A. Legal Standards

"In an [*inter partes* review], the petitioner has the burden from the onset to show with particularity why the patent it challenges is unpatentable." *Harmonic Inc. v. Avid Tech., Inc.*, 815 F.3d 1356, 1363 (Fed. Cir. 2016) (citing 35 U.S.C. § 312(a)(3)).

"[T]he dispositive question regarding anticipation [i]s whether one skilled in the art would reasonably understand or infer from the [prior art reference's] teaching that every claim element was disclosed in that single reference." *Dayco Prods., Inc. v. Total Containment, Inc.*, 329 F.3d 1358, 1368 (Fed. Cir. 2003) (quoting *In re Baxter Travenol Labs.*, 952 F.2d 388, 390 (Fed. Cir. 1991)) (emphasis omitted). "Because the hallmark of anticipation is prior invention, the prior art reference—in order to anticipate under 35 U.S.C. § 102—must not only disclose all elements of the claim within the four corners of the document, but must also disclose those elements arranged as in the claim." *Net MoneyIN, Inc. v. VeriSign, Inc.*, 545 F.3d 1359, 1369 (Fed. Cir. 2008) (internal quotation marks omitted).

A claim is unpatentable under 35 U.S.C. § 103 if the differences between the claimed invention and the prior art are such that the claimed invention as a whole would have been obvious before the effective filing

date of the claimed invention[8] to a person having ordinary skill in the relevant art. *KSR Int'l Co. v. Teleflex Inc.*, 550 U.S. 398, 406 (2007). The question of obviousness is resolved on the basis of underlying factual determinations including: (1) the scope and content of the prior art; (2) any differences between the claimed subject matter and the prior art; (3) the level of ordinary skill in the art; and (4) secondary considerations (i.e., objective indicia) of nonobviousness when presented.[9] *Graham v. John Deere Co.*, 383 U.S. 1, 17–18 (1966). To show unpatentability based on a combination of teachings, "[a]n obviousness determination [also] requires finding both that a skilled artisan would have been motivated to combine the teachings of the prior art references to achieve the claimed invention, and that the skilled artisan would have had a reasonable expectation of success in doing so." *CRFD Rsch., Inc. v. Matal*, 876 F.3d 1330, 1340 (Fed. Cir. 2017) (internal quotation marks omitted).

B. Level of Ordinary Skill in the Art

Petitioner proposes that the person of ordinary skill in the art ("POSA") in September 2017 "would have had an undergraduate degree in mechanical engineering or a related engineering discipline and 2–4 years of product design or engineering experience." Pet. 15 (citing Ex. 1003 ¶ 35).

---

[8] Although *KSR* addressed pre-AIA § 103, which set the timing of the obviousness inquiry at the time the invention was made, *KSR* and other pre-AIA obviousness precedents cited herein still apply.

[9] Petitioner states that it is not aware of any objective indicia of nonobviousness (Pet. 94) and Patent Owner does not provide argument about any objective indicia. *See generally* PO Resp.; Ex. 2008 ¶ 165 (indicating no opinions on secondary considerations).

Patent Owner counters that a POSA "would have had an undergraduate degree in mechanical engineering or a related engineering discipline and 2-4 years of product design or engineering experience designing medical devices in the field of the '012 Patent." PO Resp. 31 (citing Ex. 2008 ¶ 76). Patent Owner critiques Petitioner's proposed POSA level as lacking specificity because it "omits any requirement of experience in designing medical devices generally, let alone in the field of the '012 Patent." *Id.* Patent Owner urges that "experience in the field of the invention . . . is a critical component of the skills a POSA would need." *Id.*[10] According to Patent Owner, Petitioner's arguments relying on a declaration from Mr. Thornton based on an allegedly "incomplete perspective" should be given little or no weight. *Id.* at 32.

The parties propose essentially the same formal educational background for the POSA, but we agree with Patent Owner that Petitioner's proposed POSA definition lacks some specificity concerning the POSA's work experience. That definition, if interpreted generically, could mean that a person qualifies as a POSA if they had, for example, a B.S. in mechanical engineering and only two years of experience with *any type of product in any field*. That is too broad.

We find that a POSA would have had the agreed-upon educational credentials—an undergraduate degree in mechanical engineering or a related engineering discipline. Ex. 1003 ¶ 35; Ex. 2008 ¶ 76.

---

[10] Although unspecified in this proceeding, in the related 1157 IPR, Patent Owner stated that the field of the invention is "hemostasis valves for use during intravascular procedures." IPR2024-01157, Paper 13 at 22.

We also find that a POSA would have had 2–4 years of design or engineering experience related to products in the field of the invention, which involves endovascular devices and the surgical procedures that use such devices. Ex. 1001, 1:24–60 (background of the invention). Such devices include, but are not necessarily limited to, hemostasis valves and catheters for minimally-invasive vascular surgeries. *Id.*

Furthermore, as pointed out by Petitioner and consistent with the testimony of the parties' experts, the POSA need not have had firsthand experience *designing* relevant medical devices, including hemostasis valves. Pet. Reply 28; *see, e.g.*, Ex. 1019 (Zalesky Tr.), 72:11–73:7 (testifying direct experience "designing" hemostasis valves or aspiration catheters is not necessary, but "general experience with vascular devices and procedures" is required); Ex. 2006 (Thornton Tr.), 180:13–19. As Dr. Zalesky testified, the POSA's experience related to such devices "could be as simple as bench testing and looking at clinical data." Ex. 1019, 74:5–75:1; *see also id.* at 82:3–6 (testifying a POSA need not "have specific experience with different methodologies of hemostasis"). Lastly, a POSA would have had an understanding of such devices' design requirements as determined by the needs of the physician, patient, and procedure, which understanding may be informed by work experience and/or study. Ex. 2006, 24:5–21.

The parties' declarants both possess at least the qualifications of a POSA and each is capable of credibly testifying about the issues in dispute from the POSA's standpoint as defined above. Ex. 1003 ¶¶ 5–14 (describing background and qualifications); Ex. 2008 ¶¶ 8–20 (same). Although Patent Owner argues Mr. Thornton opines about unpatentability by applying a proposed POSA level that is lower (i.e., invoking more general engineering experience or principles), allegedly entitling Mr. Thornton's testimony to

less weight, we have considered Patent Owner's argument when weighing the experts' competing opinions.[11]

C. Claim Construction

In *inter partes* review, we construe claims using the same claim construction standard used to construe claims in a civil action before the courts under 35 U.S.C. § 282(b), including construing claim language in accordance with its ordinary and customary meaning as understood by the POSA, in view of the patent's specification and considering the patent's prosecution history. 37 C.F.R. § 42.100(b). We need only construe terms where the parties dispute the terms' meanings and only to the extent needed to resolve the controversy. *Realtime Data, LLC v. Iancu*, 912 F.3d 1368, 1375 (Fed. Cir. 2019).

Petitioner provides argument on the meaning of two claim terms: "aspiration catheter" and "filament." Pet. 16–20. Those terms appear in independent claim 1 (e.g., "a first *filament* formed into a loop"). We address those terms in turn below.

1. "aspiration catheter"

Claim 1's preamble recites "[a]n aspiration catheter." Ex. 1001, 22:10. Petitioner contends that, as a general rule, a preamble does not limit the scope of a claim, and that the term "aspiration" here merely describes a non-limiting "intended use" of an otherwise structurally-complete invention defined by the body of the claim. Pet. 18–19. Patent Owner responds that

[11] In the related 1157 IPR, Patent Owner moved to exclude Mr. Thornton's testimony, which motion we denied. IPR2024-01157, Paper 35 at 70–72. Patent Owner filed no motion to exclude here.

whether the term "aspiration" limits claim 1 is "not germane to Patent Owner's arguments here." PO Resp. 30.

We need not further construe "aspiration catheter" as no dispute turns on that term's meaning or whether it is limiting. *Realtime Data*, 912 F.3d at 1375 (explaining that claims need only be construed to the extent necessary to resolve matters in dispute).

2. "filament"

The parties dispute the meaning of the term "filament," which appears in each of the challenged claims. Pet. 16–17; PO Resp. 22–30. Petitioner argues that a filament "mean[s] at least 'one or more threads, lines, cords, ropes, ribbons, flat wires, sheets, or tapes.'" Pet. 16. In response, Patent Owner contends that the claimed filament "should be accorded its plain and ordinary meaning: 'a thin, flexible length of material formed by one or more strands of material." PO Resp. 22.

As we discuss in more detail below, the core claim construction dispute is whether the filament must be flexible. This dispute is especially relevant to Grounds 1 and 2, where Schaffer is the only asserted reference. *See supra* Section II.E.[12] According to Patent Owner, because a filament is flexible, Schaffer's "rigid" actuating members are not a filament and, thus, Petitioner has not shown that Schaffer discloses all elements of the claimed valves. *See, e.g.*, PO Resp. 32–42. Conversely, for Grounds 3, 4, 6, and 7, which rely on additional disclosures from Hartley or Eller, there is no dispute that a "filament" is disclosed in the art supporting those grounds.

[12] The dispute is also relevant to Ground 5 (combining Schaffer and Garrison) because, like in Grounds 1 and 2, Petitioner relies on Schaffer as allegedly disclosing the claimed "filament." Pet. 83–94.

See, e.g., Pet. 40–46 (citing Hartley's "string" as the alleged filament (Ex. 1006 ¶ 31, Fig. 3 (depicting string 14)); Ex. 1006 ¶ 17 ("The flexible member may be a string, suture or band or other suitable material.")).

Claim 1 requires, among other limitations, a hemostasis valve that includes a "collapsible tubular sidewall defining a valve lumen" and a constricting mechanism comprising "a first ***filament*** formed into a loop around the collapsible tubular sidewall." Ex. 1001, 22:18–19 (emphasis added). Further, claim 1 recites, the "constricting mechanism" includes at least one actuator "that pulls the first end portion [of the filament] such that a diameter of the valve lumen decreases in response to reducing a diameter of the loop." *Id.* at 22:23–25.[13]

According to Petitioner, the '012 patent's claims provide little information to shed light on the meaning of the term "filament" yet the Specification provides "explicit examples" of filaments. Pet. 16. Petitioner cites the Specification's disclosure that "[t]he filament can be made from a variety of materials including, for example, a polymer, a synthetic, and/or a metal," that "the filament can comprise a single strand . . . [or] a plurality of strands that can be, for example, twisted, woven, grouped, and/or fused to form the filament," and that "the filament 150 can comprise one or several threads, lines, cords, rope, ribbon, flat wire, sheet, or tape." *Id.* at 16–17

[13] The '012 patent uses "tensioning mechanism" and "constricting mechanism" interchangeably. *See, e.g.*, Ex. 1001, 2:25–28 ("[T]he tensioning mechanism is moveable between a first configuration in which the central lumen is constricted and sealed and a second configuration in which the central lumen is open."), 6:19–23 ("The constricting mechanism can be moved from a first configuration to a second configuration, and the constricting mechanism can collapse and/or seal the central lumen when the constricting mechanism is in the first configuration.").

(citing, e.g., Ex. 1001, 9:13–15, 9:21–23). From those disclosures, Petitioner argues a "filament" should be construed to mean "one or more threads, lines, cords, ropes, ribbons, flat wires, sheets, or tapes." *Id.*

Patent Owner does not dispute that the term "filament" may comprise the structures listed in Petitioner's proposed construction (one or more threads, wires, etc.). PO Resp. 25–26. Patent Owner contends, however, that the plain meaning of the claimed filament, as supported by the intrinsic and extrinsic evidence, requires flexibility. *Id.* at 22–28 (citing, e.g., the claims' recitation that the filament forms a loop, and the Specification's description of loop embodiments (Figs. 6 and 7), which necessarily must be flexible to function as intended); Ex. 2005 (Thornton Tr.), 122:17–21, 123:1–3 (agreeing the plain meaning of a filament is something thin and flexible)).

As an initial matter, we agree with Petitioner that a "filament" as claimed encompasses one or more threads, lines, cords, rope, ribbon, flat wire, sheet, or tape. The '012 patent lists those as example structures. Ex. 1001, 9:21–23 ("In some embodiments, the filament 150 can comprise one or several threads, lines cords, rope, ribbon, flat wire, sheet, or tape.").

That does not, however, resolve the dispute about "flexibility." On that issue, after considering the full record developed through trial, we agree with Patent Owner that a "filament" as claimed is flexible.

The claims support Patent Owner's interpretation. Patent Owner cites the claim language, including the recitation that "the first filament [is] formed into a loop around the collapsible tubular sidewall defining a valve lumen" and that "a diameter of the valve lumen decreases in response to reducing a diameter of the loop." As Patent Owner argues, and as we recognized at the institution stage, the claimed filament "must be flexible to

be able to be drawn tighter to decrease the loop's diameter to [thereby] constrict the valve lumen." PO Resp. 23; Inst. Dec. 15–16; Ex. 2008 ¶ 68 (testifying that a POSA would understand this property of flexibility is essential to achieving the claimed loop formation and function).

The Specification supports this understanding. Consider the "loop" embodiments as illustrated in Figures 6 or 7. Ex. 1001, Figs. 6–7. If the filament forming each depicted loop was somehow rigid, applying a force that seeks to pull the respective ends of the filament in opposing directions would not decrease the size of the loop—the loop would stay the same size and the filament would not circumferentially constrict and seal the elongate member's lumen as described in the patent. Ex. 1001, 13:18–29.

The Specification also describes the filament as being selectively "tightened" and "loosened" about the elongate member (i.e., the tubular sidewall). Ex. 1001, 9:41–43, 9:58–62 (teaching "the filament 150 is tightened" when the actuator is released and "the filament 150 is loosened" when the actuator is pressed to open the valve). Dr. Zalesky opines that a POSA would have understood the patent's description of loosening and tightening as indicating that the filament must be able to flex and slacken around the tubular sidewall to allow the valve lumen to be variably expanded and constricted. Ex. 2008 ¶ 70. This evidence is more consistent with an interpretation where the claimed filament is flexible, not rigid.[14]

---

[14] Petitioner cites another patent where Patent Owner specifically claimed a filament that "is flexible," which, Petitioner contends, shows that filaments are not inherently flexible. Pet. 17–18 (citing Ex. 1016, claim 1). We found this argument unpersuasive in a related proceeding and reiterate the same here. IPR2025-00728, Paper 13 at 17–18 (explaining that that claim in question appeared to be an instance of redundancy in certain claim language

The extrinsic evidence also supports Patent Owner's interpretation of a "filament" as requiring flexibility. Both parties' experts testify that a filament is, according to its plain and ordinary meaning, flexible. Ex. 2008 ¶ 66 (testifying the "plain and ordinary meaning" is "a 'thin, flexible length of material formed by one or more strands of material'"); Ex. 2005 (Thornton Tr.), 123:1–3 ("Q. Does a filament have to be flexible? A. I think in the ordinary meaning of filament, it has flexibility."). And Patent Owner cites dictionaries defining a filament as "a single thread or a thin flexible threadlike object, process, or appendage" and "a slender threadlike object or fiber." PO Resp. 28 (citing Ex. 2002 (Merriam-Webster Collegiate Dictionary), 467; Ex. 2003 (New Oxford American Dictionary), 644).

Petitioner criticizes Patent Owner's reliance on dictionary definitions and contends that such definitions do not justify Patent Owner's proposed construction. Pet. Reply 20 (arguing one definition (Ex. 2003) does not mention "flexibility" and the other (Ex. 2002) excludes structures in the '012 patent, like ribbon and tape). This criticism is unavailing. A "slender threadlike object or fiber" suggests flexibility without expressly stating it. Ex. 2003, 644. We also see no adequate evidentiary basis to conclude that a POSA would have interpreted the structures (e.g., ribbon, wire, or tape) allegedly excluded from another dictionary definition as comprising rigid structures. Patent Owner's cited dictionary definitions are consistent with an interpretation of the term filament that requires flexibility and Petitioner provides no persuasive evidence to the contrary.

---

chosen, and did not demonstrate that the plain and ordinary meaning of a filament encompasses inflexible structures).

Petitioner argues that claim 1's recitation of "a first filament formed into a loop" encompasses not just the '012 patent's "loop" embodiments, but the "bight" embodiments as well. Pet. Reply 15–18. According to Petitioner, the "bight" embodiments could be considered as forming a "loop" as claimed because "the [two] bights collectively form a loop and pulling on the ends of the bights reduces the loop diameter." *Id.* (citing Ex. 1001, Figs. 8–9).

We disagree. The Specification repeatedly describes the two types of filament configurations separately—using different terminology to describe how loops and bights are formed, and how loops and bights interface with an elongate, collapsible tubular member to provide the collapsing/constricting function. The following disclosures are illustrative:

> In ***some embodiments***, the at least one filament ***forms a loop around the elongate member***, and moving the tensioning mechanism from the second configuration to the first configuration ***reduces the size of the loop to thereby constrict the tubular member within the loop***. In ***some embodiments***, the ***filament forms at least one bight around a portion of the elongate member***. . . . In some embodiments, the at least one bight can include a first bight oriented in a first direction . . . and a second bight oriented in a second direction . . . . In ***some embodiments***, the ***first and second bights overlap to encircle a portion of the tubular member within a constricting area***.

Ex. 1001, 4:62–5:8 (emphases added); *see also id.* at 13:17–61 (describing filaments that form "loops" around the elongate member (as shown in Figs. 6 and 7) distinctly from filaments that form "bights" that define an "encircled area" or "constricting area" around the elongate member (as shown in Figs. 8 and 9)); *see also* Inst. Dec. 17–19 (citing additional disclosures in the '012 patent distinguishing between bights and loops). These disclosures suggest that filaments that form *loops with a loop*

diameter that can be decreased when the filament is under tension are not the same as filaments that form *bights defining an encircled or constricting area with a size that can be reduced* when the bights are placed under tension. And, even assuming the claimed "filament formed into a loop" encompassed two overlapping or interlocking bights, Petitioner provides insufficient evidence through trial to persuade us that filaments forming such bights would nonetheless embrace inflexible structures.[15]

Lastly, Petitioner argues that Patent Owner's proposed construction requiring that the filament be flexible injects ambiguity into the claims (as a relative term) and, thus, should be rejected. Pet. Reply 18–20 (citing the Board's reluctance at the institution stage of the 1157 IPR to adopt Patent Owner's interpretation due to potential ambiguity); *see also id.* (citing, e.g., Ex. 1019 (Zalesky Tr.), 108:9–11 ("I don't believe that [the patent] teaches a very specific measurement of the tensile properties."), 107:7–108:14 (testifying on "qualitative," "trial and error" means to determine if a material had flexibility sufficient to function as the claimed filament)).

The evidence developed through trial indicates, however, that a POSA would have reasonably understood the flexibility needed for the claimed filaments and valves to work as described. *See, e.g.*, Ex. 2008 ¶ 74

---

[15] In the Final Written Decision in the related 1157 IPR, we interpreted the term "filament" as requiring flexibility even for those claims that did not expressly recite that the filament forms a "loop." *See* IPR2025-01157, Paper 35 at 14–24 (explaining that, even for the "bight" embodiments, little beyond conjecture suggests that a filament includes inflexible structures); *SightSound Techs., LLC v. Apple Inc.*, 809 F.3d 1307, 1316 (Fed. Cir. 2015) ("Where multiple patents derive from the same parent application and share many common terms, we must interpret the claims consistently across all asserted patents.") (internal quotation marks omitted). The '011 patent in the 1157 IPR is an immediate parent to the '012 patent.

(testifying the filament would be flexible to the degree needed to loosen and reduce in diameter when formed into a loop around the collapsible tubular sidewall). Indeed, Mr. Thornton admitted that a POSA would have had the skill needed to determine an appropriate level of flexibility for the filament (along with the material properties for the other components):

> Q . . . So that level of flexibility, in this context of a hemostasis valve for an aspiration catheter, one skilled in the art would be able to determine what the level of flexibility is, wouldn't they?
>
> THE WITNESS: I think a person skilled in the art would be able to engineer the right balance of material properties for the filament, the compression tube, or tubular sidewall, the springs, et cetera, in order to make the design work well.

Ex. 2007 (Thornton Tr.), 38:22–39:7 (objection omitted); *see also id.* at 44:14–20 (testifying, in response to the question "a person of ordinary skill in the art in 2017 would [have] understood what that level of flexibility would be, wouldn't they?," that "I think they could figure it out").

For the reasons above, we conclude that the evidence supports Patent Owner's position and a POSA would have understood the plain and ordinary meaning of the claimed "filament" as a flexible length of material (e.g., one or more string(s), wire(s), tape(s)).[16]

D. Asserted References

Petitioner asserts, and Patent Owner does not dispute, that Schaffer, Hartley, Eller, and Garrison are each prior art under 35 U.S.C. § 102(a)(1). Pet. 21.

---

[16] We need not adopt Patent Owner's inclusion of the words "thin" or "strands" in its proposed construction to resolve the controversy before us. PO Resp. 22.

In describing and applying Schaffer, Petitioner also cites certain drawings submitted during prosecution of the Schaffer application due to those drawings' improved clarity versus the versions of the drawings that appear in Schaffer as published. Exhibit 1008 (drawings dated June 18, 2003, submitted during Schaffer's prosecution). In this Decision, we may likewise cite the prosecution drawings in Exhibit 1008 because those drawings are clearer than the comparable drawings in Exhibit 1005.[17]

1. Schaffer (Ex. 1005)

Schaffer is a U.S. patent application that published December 4, 2003. Ex. 1005, code (43). Schaffer is titled "Composite Stasis Valve" and describes a "valve for blocking the flow of gas or fluid with or without an instrument in place within the gas/fluid path." *Id.* at Abstr.; *see also id.* ¶¶ 2–3 (disclosing that Schaffer "relates to catheters, in particular to composite fluid-stasis valves for use with catheters" and "[f]luid stasis mechanisms are commonly used to prevent loss of fluids from the insertion site of a catheter").

An embodiment of Schaffer's fluid-stasis valve, including Petitioner's uncontested annotations, is shown below.

[17] Patent Owner, in a footnote, questions Petitioner's use of the drawings in Exhibit 1008 and states that those drawings "taint" Petitioner's arguments about Schaffer's teachings. PO Resp. 33 n.2. We disagree. Exhibit 1008 is helpful in evidencing how a POSA would have understood the dark-shaded drawings reproduced in the Schaffer application as published. We also denied Patent Owner's motion to exclude Exhibit 1008 in the 1157 IPR (which motion Patent Owner does not file here) and noted that, under 37 C.F.R. § 1.11, the clearer prosecution drawings were publicly available once Schaffer published and, at a minimum, could be appropriately used for Petitioner's obviousness analyses. IPR2024-01157, Paper 35 at 72–74.

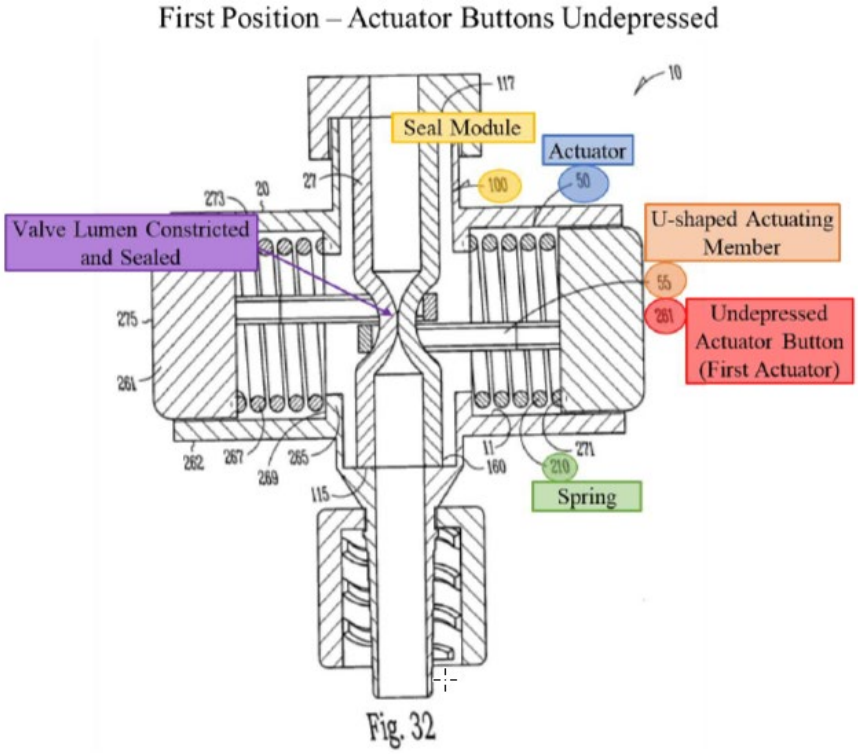

Pet. 35 (Ex. 1008, Fig. 32[18] (annotated)); Ex. 1005, Fig. 32, ¶ 75 ("FIGS. 30–34 illustrate one embodiment of the stasis valve 10 including a seal module 100 having a lumen sized to allow the passage of fluids or gases."); Ex. 1008, 16–19 (Figs. 30–34). Schaffer's Figure 32, above, is a cross-sectional view of a stasis valve 10 in a "first position," where actuator button(s) 261 (red highlight) are undepressed, allowing seal module 100 (yellow highlight) to take on a collapsed configuration such that a valve lumen (purple highlight) is at least partially collapsed/constricted and sealed by a compressive force provided by spring(s) (green highlight), which force is applied to actuating member(s) 55 (orange highlight) and transferred to a central portion of seal module 100. Ex. 1005, Fig. 32, ¶¶ 75–77; Ex. 1008, 17. Schaffer discloses that actuator 50 (dark blue highlight) "include[s] an

[18] Petitioner cites drawings from Schaffer submitted during prosecution of that application due to those drawings' improved clarity. Ex. 1008.

actuating member 55 which, in one option, is U-shaped" (orange highlight). Ex. 1005 ¶ 76; *see also* Ex. 1008, 18 (perspective view of valve 10, showing valve with two U-shaped actuating members 55). Schaffer discloses that, in the first position, the actuating members 55 "are, in one option, disposed at least partially circumferencially [*sic*] disposed about" the seal module "depressing and at least partially collapsing a portion 108 of the containment structure 160 by a compressive force 67 (e.g., by a spring 210)." Ex. 1005 ¶ 77. Schaffer teaches that actuating members may optionally comprise aluminum or plastic. Ex. 1005 ¶¶ 81, 82 (actuating members and buttons may, for example, be machined from aluminum).

Although not shown in Figure 32 above, when the actuator buttons of this illustrated embodiment are pressed, the stasis valve takes on a "second [open or unsealed] position." Ex. 1005 ¶ 77, Fig. 34 (showing the valve with both buttons depressed such that central portion of the valve lumen/seal module retracts to an unsealed configuration). According to Schaffer:

> In the second position, the actuators 50 are disposed away from a portion 108 of the seal module 100 by a compressive force 67 (e.g., by depressing the distal end 275 of the actuator button 261). As each actuator button 261 is depressed, each actuator 50 slides along the cylindrical interior wall 11 of the housing 20. The proximal end 273 of each actuator button 261 compresses the distal end 271 of each resilient member 267 which in turn, the proximal end 269 of each resilient member 267 compresses against the inner flange wall 265 of the housing 20. Such movement allows each engaged actuating member 55 to forcibly disengage opposing outer walls 27 of seal module 100 allowing the portion 108 of the containment structure 160 to retract to an uncollapsed configuration where gases and fluids can pass therethrough.

Id. ¶ 77, Fig. 34.

2. Hartley (Ex. 1006)

Hartley is a U.S. patent application that published June 26, 2003. Ex. 1006, code (43). Hartley is titled "Access Valve" and, in general, relates to an access valve for laparoscopic or intralumenal deployment devices. *Id.* at Abstr., code (54); *see also id.* ¶ 3 ("The invention will be discussed in . . . relation to fluid flow prevention and access valves in medical applications for instance where it is desired to seal around a catheter or other instrument . . . to prevent loss of blood or other fluid.").

Hartley's Figure 5 is reproduced below.

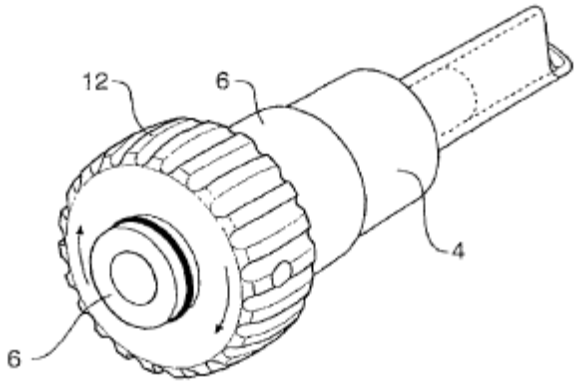

Fig 5

Ex. 1006, Fig. 5. Figure 5 above is a perspective view of an illustrative delivery catheter and constriction valve described in Hartley. *Id.* ¶ 29. The valve includes, *inter alia*, catheter body 4, cylindrical housing 6, and rotary actuator 12. *Id.* ¶ 31.

The action of Hartley's valve is more clearly seen in Figures 3 and 4, reproduced side-by-side below.

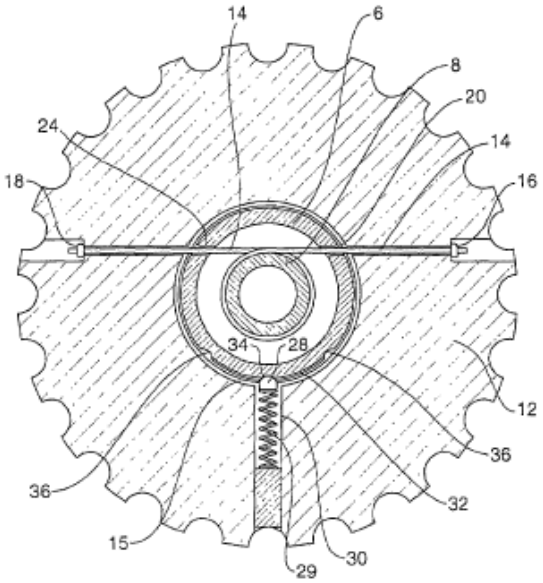

Fig 3

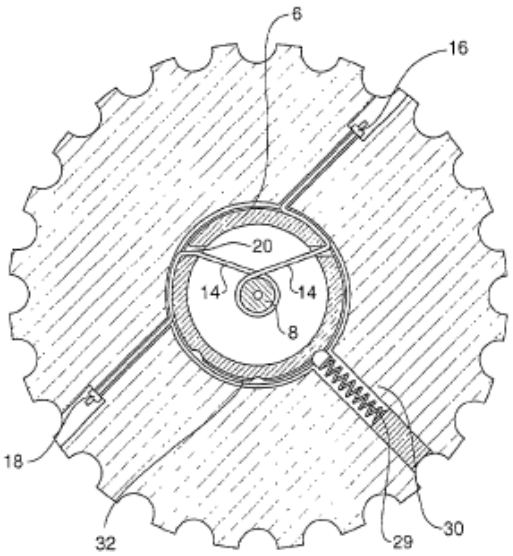

Fig 4

Ex. 1006, Figs. 3–4. Figures 3 and 4 of Hartley are top, cross-sectional views of a constriction valve, showing, respectively, the valve in an open and closed configuration. *Id.* ¶¶ 27–28, 31–34. In the open configuration (above left), rotary actuator 12 is mounted to cylindrical housing 6, and a string 14 mounted to portions of rotary actuator with knots 16, 18. *Id.* ¶ 31. String 14 (or another suitable flexible member) is wound around a cylindrical elastomeric diaphragm 8. *Id.*; *see also id.* ¶¶ 16–17 ("The flexible member may be a string, suture or band or other suitable material").

Hartley teaches that "[r]otation of the rotary actuator 12 with respect to the cylindrical housing 6 will cause the string 14 to be pulled in both directions at once and hence the cylindrical diaphragm 8 to be constricted" and sealed as shown in Figure 4 (above right). *Id.* ¶¶ 31, 34. According to Hartley, its invention provides "an access or constriction valve arrangement which will close over a range of diameters of devices passed through the valve or can close completely down to be self[-]sealing." *Id.* ¶ 37.

3. Eller (Ex. 1007)

Eller is a U.S. patent that issued May 29, 2018, and indicates a publication date of October 29, 2015. Ex. 1007, codes (45), (65). Eller relates, in general, to "[s]elective fluid barrier valve devices" and methods of treatment using such medical devices. *Id.* at Abstr., 1:13–16.

Eller discloses that "[a]n embodiment of a selective fluid barrier device comprises a housing, an actuator, a sleeve, a wire member, and a connector." *Id.* at Abstr. "The sleeve defines a passageway that extends through the [valve]" and [t]he actuator is movable between a first position and a second position" where the first position allows fluid to pass through the sleeve and, in the second position, fluid is prevented from passing. *Id.*

An embodiment of Eller's selective fluid barrier valve device is shown in Figure 15 below.

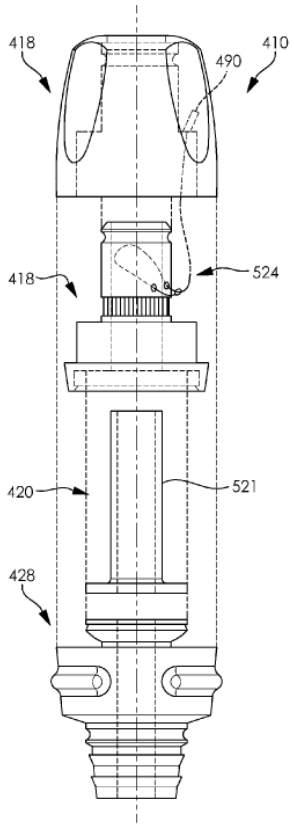

FIG. 15

Ex. 1007, Fig. 15; *see also id.* Figs. 1–2 (perspective and exploded views of similar valve device). Figure 15, reproduced above, is an exploded view of an illustrative selective fluid barrier valve of Eller. The valve device 410 includes, among other features, actuator 418, sleeve 420, and a wire member 422 (not labeled) with a first end 524 attached to actuator 418 within cavity 490. *Id.* at 21:37–22:24 ("wire member can be positioned such that it extends at least one full revolution around the outer surface of the sleeve"); *see also id.* at Figs. 16–17 (showing wire 422 looped around sleeve 420 within housing 416). As disclosed in Eller, movement (e.g., rotation) of the actuator from its first position to its second position pulls the wire member to constrict and close sleeve 420. *See, e.g.*, *id.* at 22:25–31, 1:55–2:6 (disclosing that, in the second configuration, "the sleeve passageway is closed and prevents fluid from passing"). Eller further teaches that the valve device can "be biased to the second [(closed)] configuration" by, for example, using a spring. *Id.* at 19:22–30.

Eller teaches that its disclosure can be applied to many types of actuators and is not limited to rotary actuators. *Id.* at 8:27–44. According to Eller, "while a rotatable member 29 has been illustrated, a selective fluid barrier valve device can include any suitable actuator capable of moving . . . between a first configuration and a second configuration. Skilled artisans will be able to select a suitable actuator" and "[e]xample actuators . . . include rotatable actuators, linear actuators, slidable actuators . . . and any other actuator considered suitable for a particular embodiment." *Id.*

Eller discloses that a "wire member . . . can have any suitable structure and comprise any suitable number of strands and/or fibers that are twisted, or otherwise interconnected to one another." *Id.* at 15:61–16:6 (teaching "wire member can comprise a suture or a cable"). Eller further

discloses that "[a]ttachment between a wire member and a housing and/or an actuator can be accomplished using any suitable method or technique" including, for example, "adhesives, welding, [or] fusing." *Id.* at 14:37–53.

4. Garrison (Ex. 1011)

Garrison is a U.S. patent application that published on June 25, 2015. Ex. 1011, code (43). Garrison is titled "Methods and Systems for Treatment of Acute Ischemic Stroke" and relates to a system for treating an artery, especially the cerebral arterial vasculature. *Id.* at Abstr., code (54); *see also id.* ¶¶ 2 ("[T]he present disclosure relates to methods and systems for transcarotid access of the cerebral arterial vasculature and treatment of cerebral occlusions."), 7 ("Disclosed are methods and devices that enable safe, rapid and relatively short transcarotid access to the cerebral and intracranial arteries to treat acute ischemic stroke . . . [and] include one or more transcarotid access devices, catheters, and thrombectomy devices to remove the occlusion.").

Garrison discloses embodiments having "aspiration and flow control elements configured to be used with an arterial access device, a guide catheter, and/or a catheter of the disclosed system." *Id.* ¶ 130. An embodiment of Garrison's system is shown in Figure 34 below, which figure includes Petitioner's added labeling and color-coding. Pet. 85 (Ex. 1011, Fig. 34 (annotated by Petitioner)); Ex. 1011, Fig. 34.

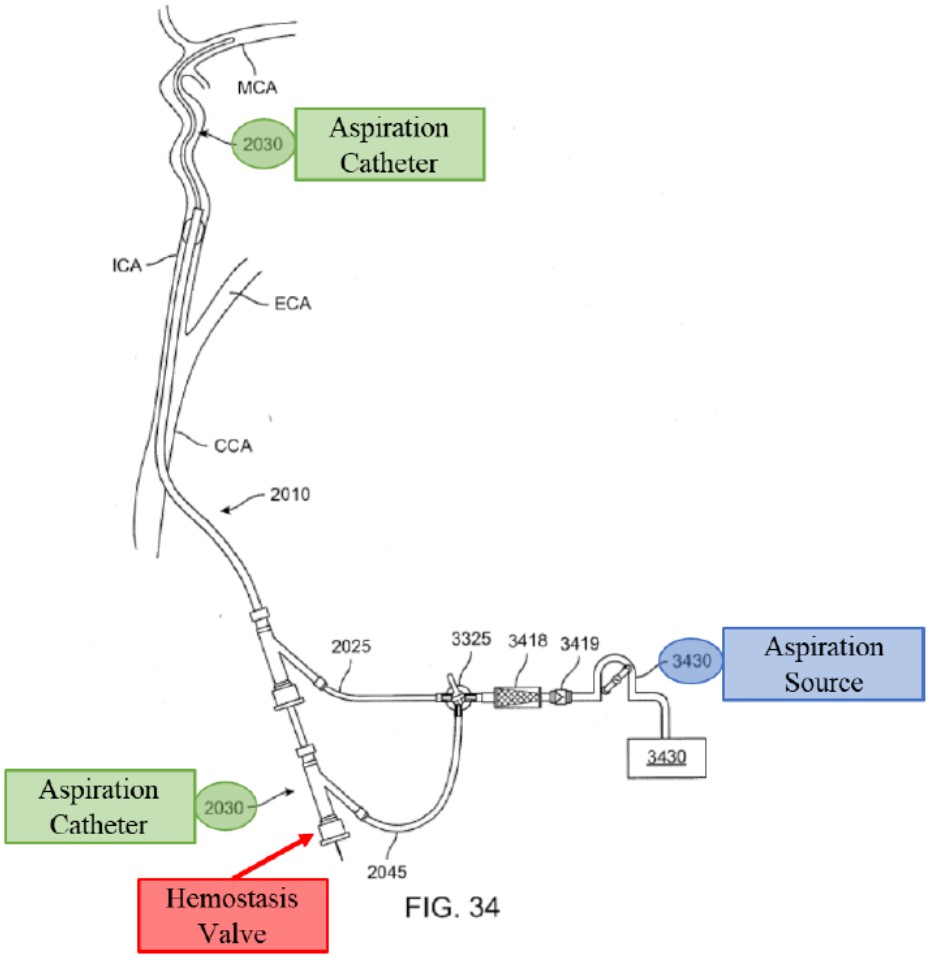

FIG. 34

Garrison's Figure 34, above, "shows a system whereby both the arterial access device 2010 and catheter 2030 [(highlighted green)] are connected to the same aspiration source 3430 [(highlighted blue)] via flow lines 2025 and 2045, respectively." Ex. 1011 ¶ 132. Moreover, Garrison discloses that the system may include valves (e.g., hemostasis valves (unnumbered but highlighted red in Fig. 34 above)) to allow introduction of devices while also preventing or minimizing blood loss during procedures. *See, e.g.*, *id.* ¶ 53, Fig. 3 (showing proximal port 2015 with hemostasis valve).

E. Ground 1: Anticipation by Schaffer

1. Summary of the Parties' Contentions

Petitioner contends that Schaffer discloses an aspiration catheter and hemostasis valve having all the elements of claims 1–9, including the filament-related limitations, and, thus, anticipates those claims. Pet. 22–40, (claim 1, preamble, tubular body, hemostasis valve, collapsible tubular sidewall, constricting mechanism, including the "actuator" and "filament" limitations), 54–57 (first spring limitation), 57–83 (dependent claims); Ex. 1003 ¶¶ 61–68, 70, 71–75, 77–79, 82–89, 90–95, 122–125 (Thornton testimony for claim 1's limitations). We focus on claim 1 below, noting again that all the challenged claims require a valve comprising, among other features, a "first ***filament*** formed into a loop around the collapsible tubular sidewall" that is configured such that, when the first end portion of the filament is pulled, "a diameter of the valve lumen decreases in response to reducing a diameter of the loop." *See supra* Section II.D.

According to Petitioner, Schaffer discloses a hemostasis valve with the "same components, in the same arrangement, as the valve claimed in the '012 patent." Pet. 4. Petitioner provides a side-by-side comparison of illustrative valves of the '012 patent and Schaffer as shown below.

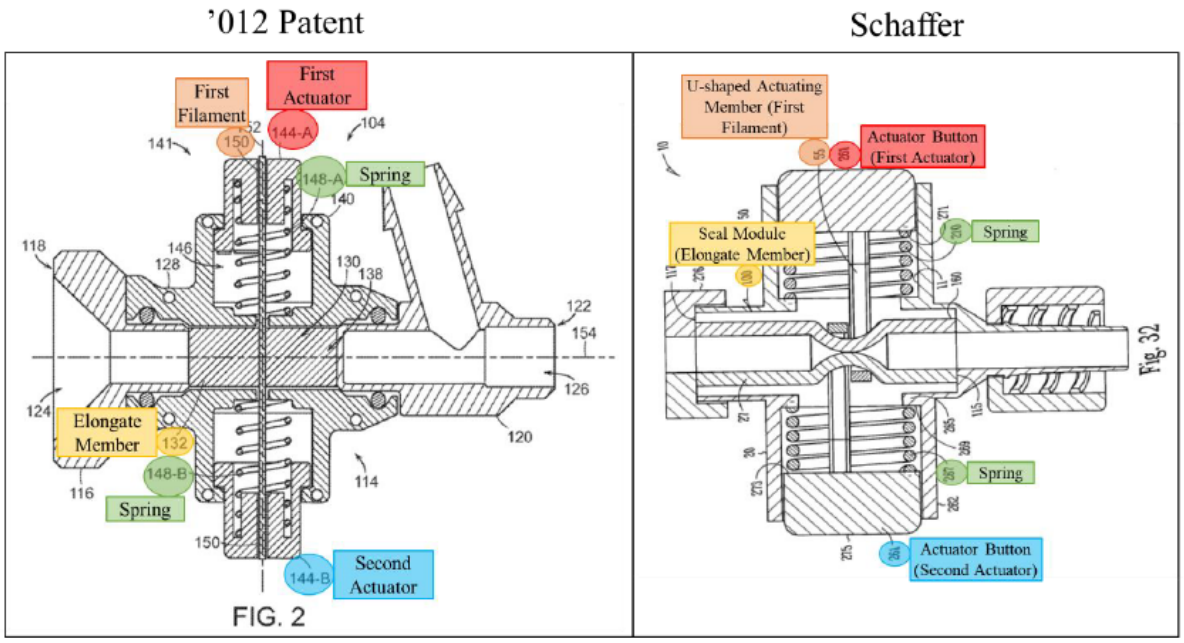

Id. (Petitioner's annotated versions of Fig. 2 of the '012 patent and Schaffer's Fig. 32).[19] The image above includes cross-sectional views of two valves—the valve of Figure 2 of the '012 patent (above left) compared to the valve in Schaffer's Figure 32 (above right), with Petitioner's highlighting of an alleged elongate member (yellow), filament (orange), actuator buttons (red), and springs (green) in the respective valves.

The parties' dispute for Ground 1 centers on whether Schaffer's valve includes a "filament" as claimed. Pet. 35–40, 56–57 (addressing Schaffer's alleged teaching of a "filament formed into a loop" that "decreases in diameter" when Schaffer's actuating members (as the alleged filament) are pulled by a spring force); PO Resp. 32–41 (arguing that Schaffer's U-shaped

[19] As noted above, Petitioner, throughout its analysis, uses a version of the Schaffer drawings (Ex. 1008) filed during prosecution of the published Schaffer application (Ex. 1005) because those drawings are clearer than the drawings in the published application. Pet. 25 n.14; *compare* Ex. 1005, Fig. 32, *with* Ex. 1008, Fig. 32.

actuating members would be understood as "rigid" and do not meet claim 1's filament limitations because such members are inflexible and further do not form a loop as claimed).

Petitioner contends that "Schaffer's U-shaped actuating members are a 'filament.'" Pet. 36 (citing Ex. 1005 ¶ 76, Fig. 31; Ex. 1003 ¶¶ 90–91). And, Petitioner contends, Schaffer's two U-shaped actuating members "collectively loop" around the seal module. *Id.* at 37–38. Petitioner's annotation to Schaffer's Figures 31 and 32, below, helps to illustrate Petitioner's position.

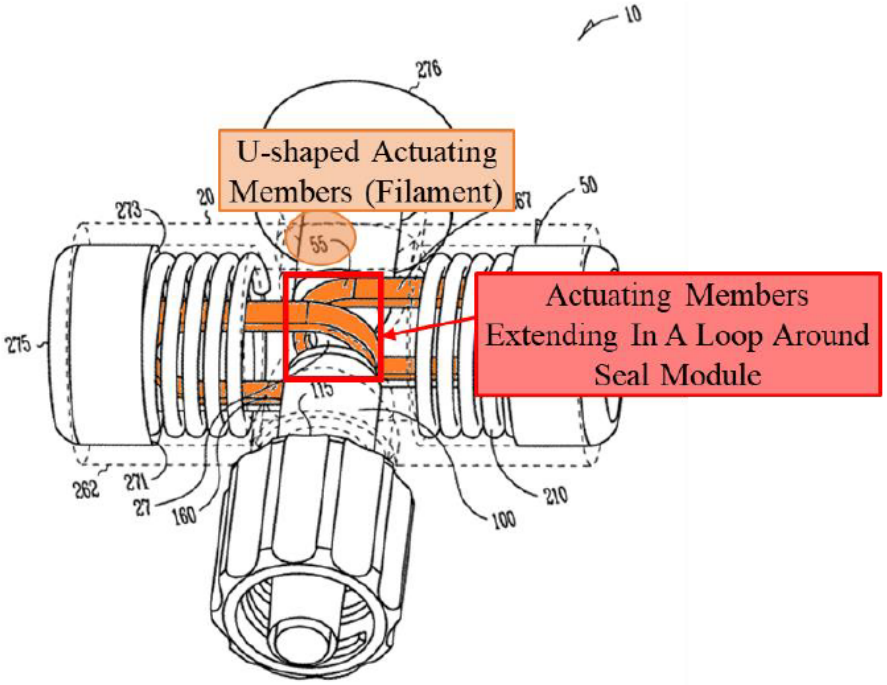

Fig. 31

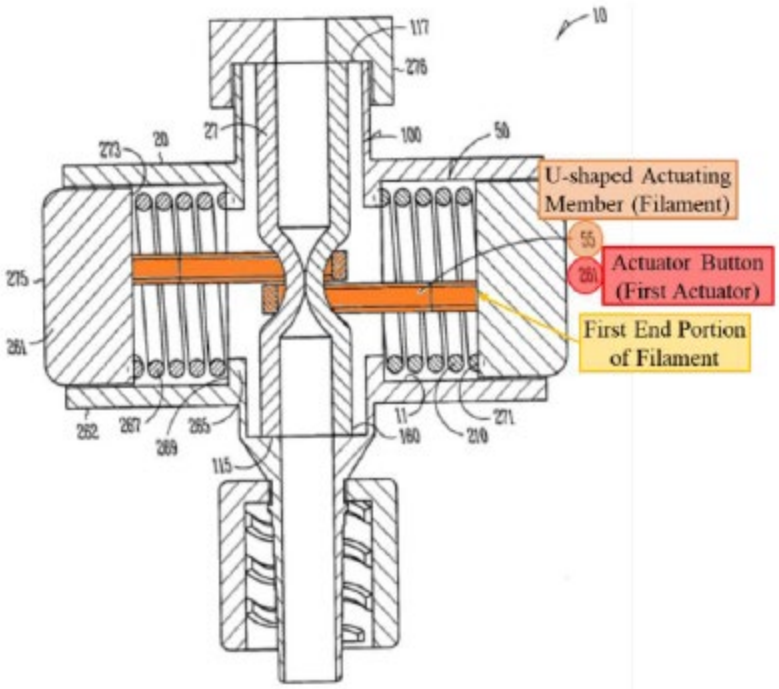

Fig. 32

Id. at 38, 40 (Ex. 1005, Figs. 31, 32; Ex. 1008, Figs. 31, 32 (annotated by Petitioner)). Figure 31 above is a perspective view of a valve described in Schaffer in a closed/sealed configuration, and Figure 32 is a cross-sectional view of that valve. Ex. 1005 ¶ 41. Figure 31 of Schaffer above depicts valve 10 in a perspective view with housing 20 represented with hashed lines (i.e., phantom view) so that the valve's internal features are shown. As shown, two U-shaped actuating members 55 (orange highlights) receive and at least partially surround a collapsible portion of seal module 100. *See* Ex. 1005 ¶ 77 ("actuating members 55 of the actuators 50, are, in one option, disposed and at least partially circumferencially [*sic*] disposed about the portion 108 of seal module 100"). Petitioner adds a red box to Figure 31, which box Petitioner labels "actuating members extending in a loop around seal module." Pet. 38 (citing Ex. 1003 ¶¶ 93–94) (capitalization omitted).

According to Petitioner, "[t]hat Schaffer depicts two actuating members" as comprising the alleged filament that forms the alleged loop is "of no moment here." Pet. 36–39. In support, Petitioner argues that the '012 patent discloses that a "filament" can comprise "multiple filaments" and Petitioner compares Schaffer's U-shaped actuating members to the '012 patent's embodiments with two overlapping U-shaped sections or "bights." *Id.* (citing Ex. 1001, 12:61–13:16, Fig. 8). Petitioner argues that "the loop formed by the actuating members decreases in diameter as the first end portion of the actuating member is pulled by the spring." Pet. 56–57 (citing Ex. 1005 ¶ 77; Ex. 1003 ¶ 125).

2. Analysis

Based on the preponderance of the evidence, and given our claim interpretation of "filament" as discussed above, Petitioner has not shown persuasively that Schaffer anticipates claim 1. The claimed filament requires flexibility to form a loop that decreases in diameter when the ends (or end) of the filament are pulled. *See supra* Section III.C.2. We find that Schaffer does not describe this feature of the challenged claims. Patent Owner argues, and we agree, a POSA would more likely have understood the U-shaped actuating members described in Schaffer as being substantially "rigid." *See, e.g.*, PO Resp. 34–35 (noting, e.g., that Schaffer discloses that its actuators and actuating members can be made by machining pre-existing amounts of metals and/or plastics); Ex. 1005 ¶ 82; Ex. 2008 ¶ 85 (testifying that a POSA would recognize that machined parts like described in Schaffer would result in rigid members).

The Petition provides no persuasive explanation to support the notion that a POSA would have understood Schaffer's U-shaped members as being "flexible," much less that such members would have sufficient flexibility to

loop around a collapsible tubular sidewall.[20] We agree with Patent Owner that Petitioner "implicitly admits" that Schaffer's U-shaped members are rigid when Petitioner asserts that actuation of those members to constrict the seal module could create gaps and routes for possible leakage compared to alternative uses of the flexible string or wire member disclosed in Hartley and Eller. PO Resp. 34 (citing Pet. 40–46). Indeed, Mr. Thornton's opinion initially given in support of Petitioner, that, "if a tool did not ***fit the size*** of Schaffer's U-shaped members, small gaps could form," is more consistent with a determination that those members are inflexible and, thus, unable to dynamically change their size or shape to conform to the dimensions of an inserted tool when actuated. Ex. 1003 ¶ 115 (emphasis added).

We credit Dr. Zalesky's interpretation of Schaffer on whether the POSA would have understood Schaffer as describing *rigid* actuating members. Dr. Zalesky testifies, for example, that a POSA would have understood from Schaffer's disclosures about the actuating members being "machined" from metal or plastic, that such actuating members would be rigid. Ex. 2008 ¶ 85 (explaining "machining is a manufacturing process in which the desired part . . . is created using the controlled removal of bulk material" to produce a "rigid material"); Ex. 1005 ¶ 82 ("The actuating member 55 and the actuating button 261 is machined from aluminum" and

[20] The Petition, after acknowledging Patent Owner's argument in related proceedings that Schaffer's actuating members are "rigid," states only that "PO's arguments are inconsistent with Schaffer." Pet. 36 (citing Ex. 1003 ¶¶ 89–91). This threadbare contention, which is undeveloped in the Petition, does not demonstrate that Schaffer discloses a flexible filament. *SmithKline Beecham Corp. v. Apotex Corp.*, 439 F.3d 1312, 1320 (Fed. Cir. 2006) ("A skeletal argument, really nothing more than an assertion, does not preserve a claim.") (internal quotation marks omitted).

"[i]n another example, the actuating member 55 and the actuating button 261 are machined from plastic"); Ex. 2008 ¶¶ 86–87 (testifying that a disclosed valve assembly technique in Schaffer (Ex. 1005 ¶ 83) also indicates that "rigid" actuating members are used). Mr. Thornton opines (without citation to a persuasive supporting disclosure) that a POSA "would have understood that Schaffer's U-shaped actuating members would have preferably been formed from a thin, flexible material." Ex. 1003 ¶ 91. But, at deposition, Mr. Thornton conceded that machined plastics and aluminum, like expressly described in Schaffer, are rigid. Ex. 2005, 168:2–6 ("Q. And you said that plastic that would be machined would be rigid, correct? A. I think that's a fair statement."). Although Mr. Thornton opines that Schaffer's actuating members would "preferably" have been flexible, he cites no disclosure or example in Schaffer—preferred or unpreferred—where that is shown.

In its Reply, Petitioner argues that Schaffer's manufacturing techniques are just examples and that other methods were available and would have allowed the POSA to make flexible metallic or polymeric materials. Pet. Reply 25 (citing Ex. 1020 ¶ 23). Ground 1 is based on alleged anticipation. That a POSA might have employed other known techniques (not described in Schaffer) to make flexible lengths of metallic or polymeric material for hypothetical use as actuating members in Schaffer's valves invokes, at best, obviousness-based reasoning. *Net MoneyIN*, 545 F.3d at 1371 ("[D]ifferences between the prior art reference and a claimed invention, however slight, invoke the question of obviousness, not anticipation.").

Petitioner also argues in its Reply that the U-shaped actuating members in Schaffer's Figures 31 and 32 "would be flexible" because those actuating members "hav[e] a thickness substantially less than their length."

Pet. Reply 21–22 (citing Ex. 1005, Figs. 31, 32; Ex. 1020 ¶¶ 17–27). Petitioner's argument is unavailing. A steel beam or a plastic broom handle are longer than they are wide and yet conventionally rigid. And, specific to the subject matter here, as Mr. Thornton admits, machining the valve's actuating members from plastic or metal, which Schaffer actually describes, would produce rigid members. Ex. 2005, 168:2–6; *see also* Ex. 2006, 152:8–10 (testifying a flexible aluminum wire would not be made from machining aluminum). Moreover, considering Schaffer's cited drawings—Figure 32, in particular—does not show the actuating members changing shape or dynamically conforming to the outer surface of the seal module that those members are compressing, which, had that been shown, might indicate flexibility. Maybe the absence of any dynamic conformance of the surface of the actuating members is an unintended limitation or artifact of the drawing. Or maybe not, and what is shown is a rigid structure consistent with Schaffer's other disclosures as already explained. We decline to find anticipation where Schaffer does not, with sufficient clarity and detail, describe a valve with a "filament" as claimed.[21]

Ultimately, on whether Schaffer describes rigid or flexible U-shaped actuating members, Dr. Zalesky's interpretation of the reference is more plausible and we find greater evidentiary support for Patent Owner's position on this issue. Notwithstanding Mr. Thornton's testimony in his rebuttal declaration that a POSA reading Schaffer would have understood

---

[21] *Wasica Fin. GmbH v. Cont'l Auto. Sys., Inc.*, 853 F.3d 1272, 1284 (Fed. Cir. 2017) ("Anticipation requires that a single reference describe the claimed invention with *sufficient precision and detail* to establish that the subject matter existed in the prior art.") (emphasis added and internal quotation marks omitted).

that flexible actuating members are described (*see* Ex. 1020 ¶¶ 21–22), his testimony on cross-examination was equivocal—he admitted "[i]t's not clear" whether Schaffer's U-shaped actuating members are flexible or rigid. Ex. 2006, 115:16–23 (testifying "[t]he material properties of the U-shaped actuating members are not clearly defined in the Shafer [*sic*] application"). Dr. Zalesky, in contrast, has consistently testified that a POSA would have understood that Schaffer describes rigid actuating members. *See, e.g.*, Ex. 2008 ¶¶ 66–74 (citing, *inter alia*, Schaffer's illustrations of the valve in operation, and the disclosed manufacturing and assembly methods as indicating that "the actuating members 55 are rigid rather than flexible").

Insofar as Petitioner relies on the '012 patent's "bight" embodiments to support its anticipation arguments, as we explained above, those embodiments are distinct from "loop" embodiments encompassed by the claims here. Pet. Reply 22–23; *see supra* Section III.C.2. As Patent Owner contends, "Petitioner's annotations to Figures 8 and 9 [of the patent] does not change that the intrinsic evidence clearly demonstrates that the claimed 'loop' embodiment does not encompass a structure with only 'bight(s).'" PO Sur-Reply 4–5, 7 (arguing loop and bight embodiments are distinct and that, even if Schaffer's actuating members were seen as analogous to bights, such bights do not form a loop as claimed).

For the reasons above, we find Petitioner has not shown by a preponderance of the evidence that Schaffer anticipates claim 1. If Schaffer does not anticipate claim 1, Schaffer does not anticipate claims 2–8. *RCA Corp. v. Applied Digital Data Sys., Inc.*, 730 F.2d 1440, 1446 (Fed. Cir. 1984) (holding that, if prior art does not anticipate an independent claim, it cannot anticipate an associated dependent claim).

F. Grounds 2 & 5: Obviousness over Schaffer, and Obviousness over Schaffer and Garrison

Petitioner alleges that claims 1–9 would have been obvious over Schaffer alone (Ground 2) or over the combination of Schaffer and Garrison (Ground 5). Pet. 21. The Petition provides no separate analysis under Ground 2—apparently resting on the contention that Schaffer anticipates the claims. Thus, Ground 2 carries at least the same flaws identified above for Ground 1. PO Resp. 42 ("Petitioner does not allege that it would have been obvious for a POSA to have modified Schaffer alone to arrive at those limitations of Claim 1 [(e.g., a 'first filament formed into a loop,' etc.)"]).[22] The same is true for Ground 5, which combines Schaffer with Garrison but identifies no disclosure in Garrison of claim 1's filament limitations that Patent Owner argues are absent in Schaffer. Pet. 83–91 (arguing that it would have been obvious to use Schaffer's valve on Garrison's aspiration catheter system); PO Resp. 77 (arguing Garrison does not make up for the deficiencies in Schaffer).

We thus determine that Petitioner has not proved by a preponderance of the evidence that claims 1–9 would have been obvious over Schaffer alone, or over the combination of Schaffer and Garrison.

---

[22] As we noted above (*supra* n.20), Petitioner's assertion (Pet. 36) that Schaffer is "inconsistent" with "rigid" actuating members is a position undeveloped in the Petition; also, this barebones assertion does not constitute separate argument under Ground 2 that a POSA would have been motivated to modify Schaffer's actuating members based on Schaffer alone. *Netflix, Inc. v. DivX, LLC*, 84 F.4th 1371, 1382 (Fed. Cir. 2023) ("It was reasonable for the Board to consider only the theory encapsulated in the plain words of [the Petition] and decline to discern another theory from the citations alone.").

G. Grounds 3 & 4: Obviousness over Schaffer and Hartley, or Schaffer and Eller

Petitioner argues that claims 1–9 would have been obvious over the combinations of Schaffer with Hartley (Ground 3) and Schaffer with Eller (Ground 4). Pet. 40–47 (modification of Schaffer in view of Hartley), 47–54 (modification of Schaffer in view of Eller), 57–83 (dependent claims).

Because of the overlap in Petitioner's arguments for Grounds 3 and 4, as well as the overlap in Patent Owner's rebuttal arguments for those grounds, our discussion below addresses both grounds together, and we focus on claim 1 as illustrative. In general, the parties' remaining dispute for Grounds 3 and 4 centers on whether a POSA would have had sufficient reasons for combining the teachings of Schaffer with Hartley or Eller in the manner proposed. *See* PO Resp. 42–76 (arguing, *inter alia*, no motivation to modify Schaffer because no problem is solved and arguing that the modification is not a simple substitution).

1. Petitioner's Contentions

Grounds 3 and 4 propose substituting the U-shaped actuating members used with valves disclosed in Schaffer with another structural sealing feature used in the hemostasis valves of Hartley or Eller. More specifically, Petitioner proposes replacing the two actuating members with a flexible string (as described in Hartley) or a flexible wire member (as described in Eller) and, thereby, arriving at a valve with all of claim 1's limitations, including the recited "filament." *See generally* Pet. 40–54.[23]

---

[23] Grounds 3 and 4 rely on Schaffer's undisputed disclosures, discussed above under Ground 1, as meeting claim 1's preamble, tubular body, hemostasis valve, tubular sidewall, constricting mechanism (including the "actuator"), and the first spring limitations. Pet. 22–40, 54–57.

For Ground 3, Petitioner contends that a skilled artisan "would have found it obvious to substitute Hartley's string for Schaffer's [U-shaped] actuating members," arguing, *inter alia*, that such modification would have "merely entailed substitution of one known element (Hartley's string) for another (Schaffer's actuating members) to yield the predictable result of constricting Schaffer's valve to form a seal." *Id.* at 41–45 (arguing a POSA would have recognized Hartley's flexible "string encircles the central lumen and precisely conforms to the diameter" of "inserted devices" (e.g., other catheters or tools) and, thus, may seal more effectively across a wider range of diameters for such inserted devices compared to Schaffer's U-shaped members and avoid formation of small gaps between the valve's lumen and the outer surface of the inserted devices); Ex. 1003 ¶¶ 99–103; Ex. 1006 ¶¶ 31, 37, Figs. 1–4.

Furthermore, Petitioner contends, POSAs had "a finite number of materials to select from to constrict a tubular member in a hemostasis valve in 2017." Pet. 43 (citing Ex. 1003 ¶ 102). According to Petitioner, Hartley and Schaffer disclose two such options: Hartley's string and Schaffer's plastic or metal U-shaped actuating members. *Id.* And, Petitioner contends, "Eller discloses a third option: one or more wire members." *Id.* Petitioner contends that a POSA "would have found it obvious to select from these finite, predictable options" and done so with a reasonable expectation of success. *Id.*; *see also id.* at 43–46 (explaining the design and operation of the modified valve of Schaffer and Hartley and arguing that a POSA would have reasonably expected success in such modification to arrive at the claimed subject matter); Ex. 1003 ¶¶ 103–108.

The image below illustrates Petitioner's proposed combination of Schaffer and Hartley.

Demonstrative Illustration
Schaffer + Hartley's String

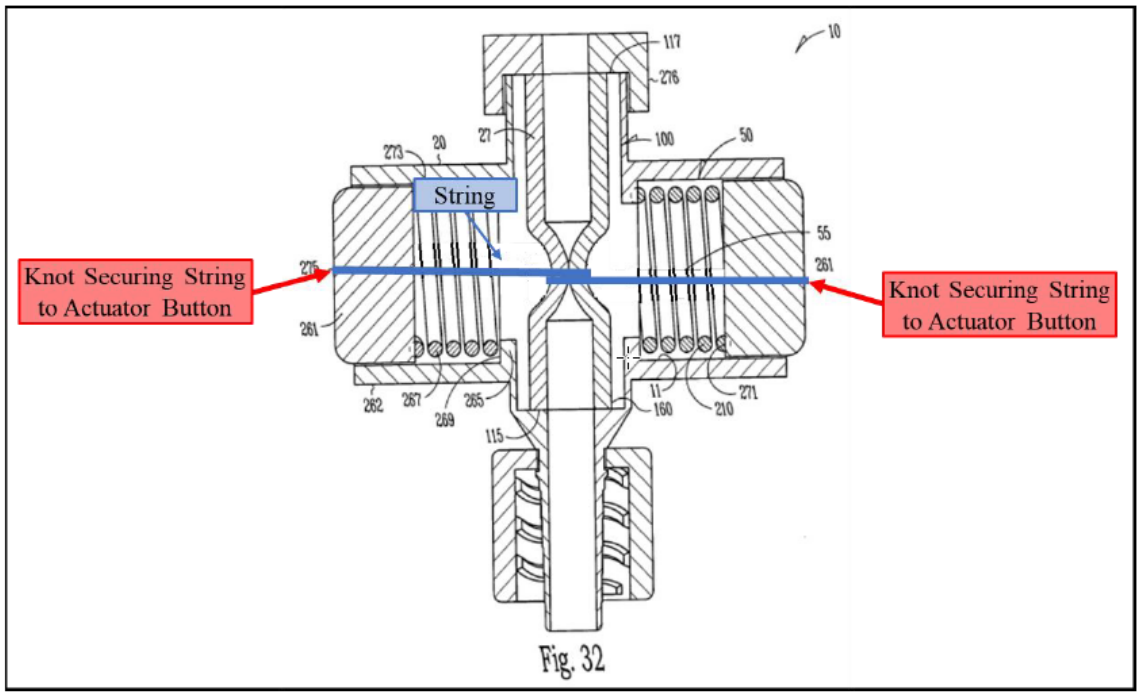

Pet. 43–45. The above image is a demonstrative that shows Schaffer's valve (from Schaffer's Figure 32) modified to substitute the two U-shaped actuating members for Hartley's single continuous string (blue highlight), which string loops around an outer wall 27 of seal module 100 and is secured at the string's ends (e.g., by knots) to the respective actuator buttons (red highlights). *Id.* (citing Ex. 1003 ¶¶ 103–108). Petitioner contends the skilled artisan would have reasonably expected success in this modification because, for example, Hartley's string would function in a similar way to Schaffer's U-shaped actuating member—constricting and collapsing the central valve lumen due to a force applied by the opposing springs and actuator buttons that pulls the string in opposite directions. *Id.* (citing, e.g., Ex. 1005 ¶ 77; Ex. 1006 ¶ 31; Ex. 1003 ¶¶ 105–106).

As noted, Petitioner contends that a skilled artisan would have recognized that, depending on the diameter and shape of the tool inserted

into the valve's central lumen during surgical procedures, Hartley's string may provide a more effective seal than Schaffer's U-shaped actuating members. Pet. 42–43 (citing Ex. 1003 ¶¶ 99–100). The graphic below helps illustrate Petitioner's reasoning.

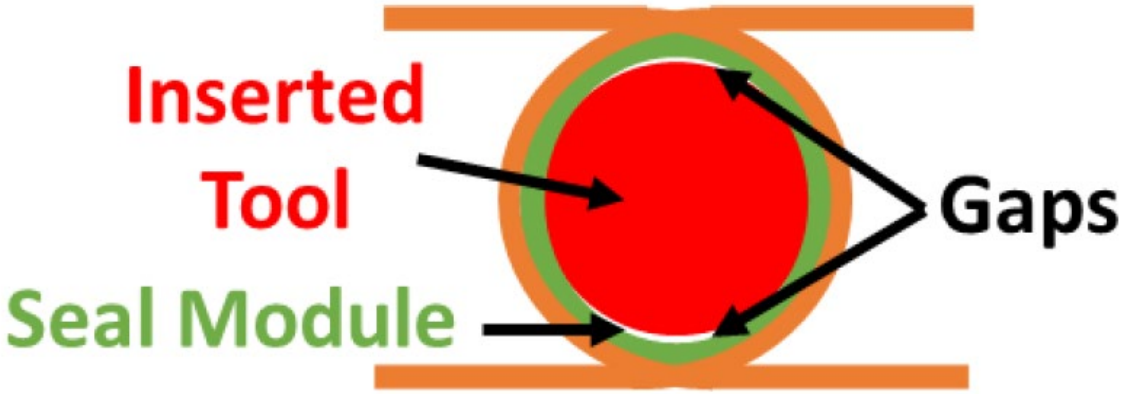

Id. The above graphic shows a longitudinal view of a seal module (i.e., tubular body with a tubular sidewall) defining a lumen (green) with a tool/device (red) with a circular diameter inserted through that lumen. *Id.* The graphic shows two opposing and overlapping U-shaped features (orange) that represent Schaffer's U-shaped actuating members as they are being pulled against the outer walls of the tubular member (e.g., seal module) to form a fluid seal in the lumen. *Id.* But, as Petitioner argues and the graphic shows, "small gaps" (white space labeled "Gaps") may form "between the valve's lumen and the outer surface" of the inserted tool or device in this arrangement, possibly allowing fluid/blood to leak through such gaps. *Id.*

According to Petitioner and Mr. Thornton, "Hartley's string would not suffer from this potential issue because the string encircles the central lumen and precisely conforms to the diameter of the inserted devices" when its ends are pulled in opposite directions and the string placed under tension. *Id.* (citing Ex. 1006 ¶ 37 (teaching Hartley's string "will close over a range

of diameters of devices passed through the valve or can close completely down to be self[-]sealing")); Ex. 1003 ¶¶ 99–100 (testifying a POSA "would have known that multiple tools of varying sizes could be required for a medical procedure, so Hartley's ability to seal around a range of diameters would have been beneficial" and "Hartley's flexible string may better conform to varying diameters or shapes of tools inserted into the valve than Schaffer's U-shaped actuating members").

Petitioner's proposed combination of Schaffer and Eller (Ground 4) is similar, but uses Eller's flexible "wire member" as the alleged "filament" in essentially the same way as Hartley's string is used and depicted above in the modified Schaffer valve. Pet. 40–49. The stated reasons for making the wire member substitution and reasonable expectation of success echo the Schaffer-Hartley combination discussed above. *Id.* at 47–54 (citing, e.g., Ex. 1007, 8:27–39, 14:37–49, 15:21–40, 17:47–18:3; Ex. 1003 ¶¶ 109–121). Further, Petitioner points out, Eller teaches that any suitable wire-attachment technique (e.g., welding, friction fit, adhesives) can be used, and that Eller's disclosures can be applied with any suitable actuator, including rotatable actuators or linear actuators like Schaffer. *Id.*; *see, e.g.*, Ex. 1007, 8:27–39.

2. Patent Owner's Counterargument

Patent Owner argues that Petitioner's reasoning for modifying Schaffer's valve based on the alleged formation of small gaps (potential leak paths for fluid) is flawed because Schaffer's valve allegedly has no leakage problem requiring any solution. PO Resp. 42–52. According to Patent Owner, Schaffer teaches that its valves form a complete fluid seal. *Id.* at 44–47 (citing, e.g., Ex. 1005 ¶¶ 6, 8, 60, 77; Ex. 2008 ¶¶ 58, 106–111). Patent Owner points to Schaffer's disclosure related to a need for "a durable stasis valve that blocks the flow of gas or fluid completely and immediately with

or without an instrument in place within the gas/fluid path," which teachings Petitioner and Mr. Thornton have cited. Ex. 1005 ¶¶ 6, 8; PO Resp. 47–48 (citing Pet. 70–71; Ex. 1003 ¶¶ 69–70). If Schaffer's valve provided a complete seal, Patent Owner reasons, there would have been no need to make any changes based on Hartley's string or Eller's wire. PO Resp. 44–49. In support, Patent Owner cites Mr. Thornton's admission that "[i]f it [(Schaffer's valve)] worked perfectly for all the ranges of tools, then there probably wouldn't be a need to make adjustments and move to a string-type member." *Id.* (quoting Ex. 2006, 116:18–117:2); Ex. 2008 ¶ 112 (Zalesky opining that there would have been no reason to modify Schaffer).

Patent Owner further argues that, in fact, Schaffer's valve does form a complete seal with or without instruments inserted, and even around multiple instruments. PO Resp. 44–47, 49–51. According to Patent Owner, Schaffer, through the use of rigid U-shaped members and inclusion of a highly-compliant third seal member (165), which may be comprised of a material that can be compared to a sticky or gelatinous substance, produces a complete fluid seal. *Id.* (citing, e.g., Ex. 1005 ¶ 58 (disclosing valve creates "nearly fluid/gas tight seal under very light compression" using material that "can be compared to a gelatinous substance"), ¶ 68 (disclosing "seal member 165 is so compliant that it forms a seal around [multiple] instruments 260 even if the instruments are irregularly shaped"), Figs. 16–19). In contrast, Patent Owner argues, Petitioner's proposed combination would actually seal less effectively around multiple instruments if, for example, "two circular instruments were inserted side-by-side through Schaffer's seal module." *Id.* at 52–53 (depicting a hypothetical two-instrument scenario and illustrating "Gaps" if Hartley's string or Eller's wire were used); Ex. 2008 ¶ 118; PO Sur-reply 12–15 (arguing the "alleged problem (gaps)" Petitioner's

combinations purport to solve is created by Petitioner by omitting Schaffer's highly compliant third seal member material). Thus, Patent Owner argues the proposed modification would be regarded as an unsuitable solution to a non-existent problem.

Patent Owner also argues that there would have been no motivation to modify Schaffer as proposed because doing so would change Schaffer's principle of operation. PO Resp. 71–76; PO Sur-reply 25–26. According to Patent Owner, Schaffer uses "rigid" U-shaped actuating members and replacing those members with a string or wire would "prevent forcible disengagement" from the seal module, as described in Schaffer. PO Resp. 72–73 (arguing Hartley's string "would never disengage" Schaffer's seal module); Ex. 1005 ¶ 77 (disclosing that depressing the two buttons in Schaffer's valve, such as shown in Figs. 30–34, "allows each engaged actuating member 55 to forcibly disengage outer walls 27 of the seal module 100 allowing the portion 108 of the containment structure 160 to retract to an uncollapsed configuration where gases and fluids can pass"). Patent Owner also argues the proposed change to a string or wire would make manufacturing the valve more difficult and undermine its durability. PO Resp. 73–76 (citing Ex. 2008 ¶¶ 143–154). Patent Owner cites Schaffer's exemplary manufacturing and assembly techniques that produce, or benefit from use of, rigid actuating members. *Id.* (citing Ex. 1005 ¶¶ 82–83). And, Patent Owner argues, "Schaffer's construction enables the valve to endure operational demands and maintain its performance and structural integrity over time." *Id.* at 75 (arguing "Hartley's string/Eller's wire could weaken the valve's durability given the flexible nature of these components") (citing Ex. 2008 ¶ 154).

Patent Owner argues that Petitioner's proposed modification of Schaffer to include a flexible string or wire is "not a simple substitution" of one known element for another. PO Resp. 53–68; PO Sur-reply 16–23. Patent Owner argues that, in Schaffer, each U-shaped actuator is attached to a single actuator button. PO Resp. 54–58. In Hartley and Eller, however, Patent Owner contends the string and wire are not attached to *two* independently controllable actuators. *Id.* at 57–60 (explaining that Hartley's string is wound around a diaphragm/lumen and its ends are attached to a single rotary actuator that places tension on the string; explaining that Eller's wire is disposed around a collapsible sleeve and has one end attached to a stationary point (e.g., a valve housing) and the other end attached to a movable (e.g., rotatable) actuator). According to Patent Owner, Petitioner's arrangement including a string/wire member having both ends attached to two separate actuators is not known in the art and, thus, the modification proposed by Petitioner is not simple. *Id.* at 60 (Ex. 2008 ¶¶ 139–140).

Patent Owner further argues that, even if a POSA would have understood that Schaffer's valve could form gaps for fluid leakage, simpler or more plausible alternatives existed that would have improved Schaffer's seal and solved the problem. PO Resp. 61–65; PO Sur-reply 20–22. Patent Owner contends that "simple modifications," including options suggested in Schaffer, would address any sealing issue, including adjusting the spring strength to apply more force, or modifying the resilience or compressibility of the seal module. *Id.* at 62–65 (citing, e.g., Ex. 2008 ¶¶ 159–160; Ex. 1005 ¶ 59; Ex. 2007 (Thornton Tr.), 130:22–131:1, 131:15–132:1 (testifying potential options for modifying the properties of a seal module existed, like compounding with C-Flex)). Thus, Patent Owner argues, a POSA would have understood that "simple properties of Schaffer's existing

valve" could have been modified without resort to wholesale substitution of Schaffer's rigid actuating members for a string or wire. PO Resp. 62–63.

Lastly, Patent Owner argues that the possible options for constricting a tubular member in a hemostasis valve were not finite, identifiable, or known, and, thus, Petitioner cannot establish that it would not have been "obvious to try" the proposed Schaffer/Hartley or Schaffer/Eller modifications. PO Resp. 68–71 (citing precedents). According to Patent Owner, Mr. Thornton admitted at deposition that there were more than three ways of sealing a hemostasis valve, undermining his initial testimony that the options were limited. *Id.* (citing, e.g., Ex. 2007, 107:3–13).

3. Analysis

a) Teaching or Suggestion of All Limitations

Petitioner provides evidence-backed and essentially uncontested argument that explains where each of claim 1's limitations is taught or suggested in the combination of Schaffer and Hartley. *See supra* Section III.E (analysis for Ground 1 noting Petitioner's uncontested argument for all but the "filament" limitations), Pet. 22–35 (citing, e.g., Schaffer's hemostasis valve as described and depicted in Figs. 31–32), 54–57; Ex. 1003 ¶¶ 57–89, 122–125; *see also* Pet. 40–46 (addressing Hartley's flexible string as the "filament" that forms a loop as claimed); Ex. 1006 ¶¶ 5, 17 ("flexible member may be a string, suture or band or other suitable material"), 31, Figs. 1–4; Ex. 1003 ¶¶ 96–108; Pet. Reply 1 ("PO does not dispute Schaffer combined with Hartley or Eller discloses every limitation of the challenged claims."), 12 (repeating citation to evidence supporting that the art's combined teachings satisfy each claim limitation).

Petitioner likewise provides evidentiary support showing where each of claim 1's limitations is taught or suggested in the proposed combination

of Schaffer and Eller. Pet. 47–54 (citing Eller's flexible wire member as the "filament"); Ex. 1007, 15:41–60 (wire members "can be formed of any suitable material . . . and skilled artisans will be able to select a suitable material" appropriate to the embodiment, including "metals such as steel, stainless steel, titanium" and "polymers" such as "polypropylene" and "Nylon"), 15:61–16:6 (a "wire member . . . can have any suitable structure and comprise any suitable number of strands and/or fibers that are twisted, or otherwise interconnected to one another"); Ex. 1003 ¶¶ 109–121 (citing, *inter alia*, Eller's teachings that, when the wire member is pulled and placed in a tensioned state around the sleeve, the sleeve moves from a relaxed to a constricted state).

Petitioner persuades us that the subject matter of claim 1 is taught or suggested in the combined disclosures of Schaffer and Hartley, as well as in Schaffer and Eller, based on the argument and evidence set forth in the Petition, as summarized above.

Patent Owner never explicitly contends that any limitation of claim 1 is missing in the combination of Schaffer and Hartley or Schaffer and Eller. But, even if some of Patent Owner's argument against the reasons for modifying Schaffer with Hartley or Eller is construed as an argument that a limitation is missing, such argument is unavailing. PO Resp. 54–60 (arguing the modification is not "simple" because none of Schaffer, Hartley, or Eller alone show a string/wire attached to two separate actuators); *see also* PO Resp. 78 (arguing, for dependent claims 2–9, that "Petitioner cites no reference that discloses a string/wire attached to and controlled by two independently movable actuators"). When obviousness is the issue, the question is whether each limitation is taught or suggested in the prior art *as combined*. *See Fleming v. Cirrus Design Corp.*, 28 F.4th 1214, 1222 (Fed.

Cir. 2022); *Bradium Techs. LLC v. Iancu*, 923 F.3d 1032, 1050 (Fed. Cir. 2019) (finding patentee's arguments on absence of a limitation "lack merit because they attack the disclosures of the two references individually"). As Petitioner and Mr. Thornton explain persuasively, Schaffer discloses a valve with two opposing spring-activated buttons that control Schaffer's U-shaped actuating members that, when those members are substituted by Hartley's string or Eller's wire as proposed, would meet the limitations of claim 1. *See, e.g.*, Pet. Reply 11–12 (citing evidence and arguing "PO fails to show that combining Schaffer's valve with Hartley's string . . . would involve any 'unknown' elements"). Hence, the claimed subject matter is found in the art's *combined* teachings.

We have also considered Petitioner's argument and evidence in support of the challenge to dependent claims 2–9 under Grounds 3 and 4. Pet. 57–83; Ex. 1003 ¶¶ 122–171. That argument and evidence is persuasive in establishing by a preponderance of the evidence that the subject matter of claims 2–9 is taught in the combined teachings of Schaffer and Hartley, or Schaffer and Eller. Insofar as Patent Owner argues (e.g., PO Sur-reply 27) that Petitioner's challenge to claim 2 is flawed because no single reference describes a string/wire attached to two separately moveable actuators, that argument fails for the reasons given above—the *combination* of Schaffer with Hartley or Eller teaches or suggests that subject matter.

b) Reasons for Combining the Art & Reasonable Expectation of Success

We agree with Petitioner that a POSA would have had reasons for combining the teachings of Schaffer and Hartley (or Eller) in the manner proposed, and with a reasonable expectation of success in producing valves as recited in claims 1–9.

We find, on balance, that a POSA would have considered the modification of Schaffer's valve to include Hartley's string or Eller's wire to involve little more than combining known prior art features according to those features' known functions to yield a predictable result. Hartley's string and Eller's wire were known in the art and used for a similar purpose to Schaffer's U-shaped actuating members—to constrict a tubular member and lumen and provide a fluid seal in hemostasis valves, with or without instruments inserted therethrough. *See, e.g.*, Ex. 1005 ¶ 77 (disclosing actuating members "at least partially circumferencially [*sic*] disposed about the portion 108 of the seal module 100 depressing and at least partially collapsing" the seal module); Ex. 1006 ¶¶ 5 ("flexible member [is] passed circumferentially around the cylindrical diaphragm and extending radially and/or tangentially therefrom and an extension arrangement to pull the flexible member . . . to constrict the diaphragm to at least partially close off the longitudinal aperture"), 17 ("The flexible member may be a string, suture or band or other suitable material"), 37 (describing a "constriction valve arrangement which will close over a range of diameters of devices passed through the valve or can close down completely to be self[-]sealing"), Figs. 3–4 (showing flexible member constricting central diaphragm/lumen); Ex. 1003 ¶¶ 99–101 (testifying use of Hartley's string for its known purpose would have yielded the predictable result of constricting the lumen of Schaffer's valve to form a seal), 114–116 (similar testimony on Eller's wire); Ex. 1007, 15:21–40, 17:38–43 (describing Eller's wire selectively actuated to put the wire under tension around a sleeve to alternatively close and open the fluid passageway defined by the sleeve), 18:3–8 (disclosing "the material that forms the sleeve . . . contacts a portion of one or more of

the medical devices [passed through the passageway] to close the passageway . . . such that fluid is prevented from passing").

That Hartley and Eller contemplate use of their respective string and wire for constricting a lumen and providing a seal against leakage of bodily fluids during surgical procedures also suggests that the disclosed strings and wires would have been regarded as suitable and sufficiently durable for medical devices—and hemostasis valves, in particular. *See, e.g.*, Ex. 1007, 1:13–16, 15:41–56 (listing suitable biocompatible materials for the wire member, such as polypropylene, stainless steel, and titanium).

We further agree with Petitioner that a POSA would have considered the proposed modification to be relatively straightforward, and within the ordinary capabilities of the skilled artisan. For example, as proposed by Petitioner, the ends of Hartley's string or Eller's wire could have been (and predictably would have been) attached to Schaffer's opposing actuator buttons according to known techniques, such as knotting or welding. Ex. 1003 ¶ 104 (proposing a "simple" knotting attachment); Ex. 1006 ¶ 31 ("string 14 is mounted into the rotary actuator with a knot 16"), Fig. 3 (showing string 14 connected to actuator at both ends with knots); *see also* Ex. 1007, 14:37–54 (disclosing "skilled artisans will be able to select any suitable method or technique" for attaching a flexible wire to an actuator of a fluid stasis valve; describing use of "adhesives, welding, fusing, [and] providing a friction fit" for attaching a wire to an actuator). That a POSA would have likely recognized that Hartley's string or Eller's wire could be used more broadly including with valves of the type described in Schaffer—and not limited to rotary valves—is supported by at least Eller's teachings. Ex. 1007, 8:27–44 (disclosing "[s]killed artisans will be able to select any suitable actuator to include on a selective fluid barrier device" and

identifying "rotatable actuators, ***linear actuators***, slidable actuators, [and] pivotable actuators" among others) (emphasis added). As Mr. Thornton explains, a POSA "would have understood that Schaffer's actuator is an example of a linear and slidable actuator" and Eller's teaching about the range of suitable actuators "would have reinforced" the reasonable expectation that Eller's wire could be successfully used in Schaffer's valve with its linear actuator buttons. Ex. 1003 ¶ 114.

Petitioner also persuades us that the proposed modification of Schaffer's valve to include a single flexible string or wire that replaces the two U-shaped actuating members would have been seen by the POSA as potentially advantageous—giving further reason for the POSA to have made that change. Pet. 41–43. We credit Mr. Thornton's testimony that a POSA would have understood that Schaffer's U-shaped actuating members may form small gaps for fluid leakage around the exterior of certain tools inserted into the lumen. Ex. 1003 ¶ 100. On the other hand, a POSA would have recognized that a single flexible string or wire that is looped completely around the exterior of the seal module/lumen would have provided more uniform and precise constriction around the entire outer diameter of some commonly-used tools, and including tools with diverse shapes and sizes. Ex. 1003 ¶¶ 99–108, 114–121.

As we pointed out in related proceedings, Patent Owner's expert, Dr. Zalesky, agrees that a flexible string or wire would have carried this advantage. *See* IPR2024-01157, Paper 35 at 54 (citing testimony (Ex. 2008 ¶ 75) that a "filament changes shape dynamically, allowing for better adaptability to the contours of the valve lumen as it is constricted"). Indeed, Dr. Zalesky admitted that a POSA in 2017 would have recognized that the "cinching" effect provided by a filament would be more effective for sealing

around inserted tools like large-bore catheters based on "simple mechanical engineering and physics." Ex. 1019 (Zalesky Tr.), 86:19–87:4.

Petitioner also argued what amounts to an obvious-to-try rationale for modifying Schaffer's valve as proposed to include Hartley's string or Eller's wire. Pet. 43, 50 (citing Ex. 1003 ¶¶ 102, 117) (arguing a POSA had "a finite number of materials to select from to constrict a tubular member in a hemostasis valve in 2017" and identifying materials, including Schaffer's actuating members, Hartley's string, and Eller's wire). Through trial in this matter, we find essentially four known options for constricting a hemostasis valve lumen: the U-shaped actuating members of Schaffer; the string or wire of Hartley and Eller; a pressure-assisted collapse valve; and pinch or clamp-type valves like described in references like Wong and Kees (and some other Schaffer embodiments).[24] PO Sur-reply 24–25. Mr. Thornton's admission at deposition that he did not know how many other ways might exist for compressing a tube does somewhat weaken Petitioner's rationale. *Id.* (citing Ex. 2007, 107:2–13). Nonetheless, Patent Owner's suggestion that there are innumerable, unknown ways to constrict a hemostasis valve's lumen appears, on this record, to be exaggerated. In any case, even if we rejected the obvious-to-try rationale, we are persuaded that other reasons given by Petitioner (discussed above) support the modification of Schaffer to include Hartley's string or Eller's wire.

In sum, we find that the reasons given by Petitioner, collectively and individually, support Petitioner's rationale for modifying Schaffer to include

[24] As cited by Patent Owner, Mr. Thornton discussed the other techniques, like the pressure-assisted approach and the pinch/clamp valves described in Wong and Kees during cross-examination. *See* PO Sur-reply 24 (citing, e.g., Ex. 2010, 105:24–106:19, 108:14–20, 110:7–19, 112:5–114:24).

Hartley's flexible string or Eller's flexible wire, and that such modification would have been made with a reasonable expectation of success in arriving at the subject matter of the challenged claims. We further address Patent Owner's counterarguments in more detail below, explaining why those arguments are insufficient to undermine Petitioner's challenge.

Patent Owner argues that Schaffer's *unmodified* valve produces a complete seal and, thus, there is allegedly no reason to change it. PO Resp. 43–53. We disagree. First, Schaffer references an alleged "complete" seal in Schaffer's "Background," from which Schaffer cites a *need* for a valve that completely blocks fluid flow. *Id.* at 47; Ex. 1005 ¶¶ 6, 8 ("Accordingly, what is needed is a durable stasis valve that blocks the flow of gas or fluid completely and immediately with or without an instrument in place within the gas/fluid path.").

Second, even if Schaffer is interpreted as describing valves aimed at addressing a need for a complete seal—and that at least some embodiments do so—that does not mean that a POSA would forego efforts to improve on Schaffer's teachings. *Pro-Mold & Tool Co., Inc. v. Great Lakes Plastics, Inc.*, 75 F.3d 1568, 1573 (Fed. Cir. 1996) ("We start from the self-evident proposition that mankind, in particular, inventors, strive to improve that which already exists."). Even in Schaffer's preferred embodiments that use a highly-compliant, "sticky" or "gelatinous" material that "exhibits a 'self closing' nature" for the third seal member, Schaffer teaches that such embodiments are capable of "forming a *nearly* fluid/gas tight seal." Ex. 1005 ¶ 59 (emphasis added). Schaffer does not, thus, teach that its valves provide a perfect seal in all embodiments and under all circumstances. So, Mr. Thornton's testimony that, if Schaffer's valve was hypothetically perfect, there would be no reason to modify it, does not

materially undercut Petitioner's challenge. PO Resp. 49 (citing Ex. 2006, 116:18–117:2). Indeed, Dr. Zalesky did not agree that Schaffer's valve left no room for improvement. Pet. Reply 4–5 (citing, e.g., Ex. 1021, 131:17–25 (Q: "And is it your opinion that Schaffer's valve will seal perfectly regardless of the diameter of the device that's inserted through the valve?"; A. "That wasn't really part of my assignment and I certainly wouldn't say perfectly")).[25]

As discussed above, Petitioner and Mr. Thornton present scenarios (that we find persuasive) where Schaffer's valves may not seal completely or perfectly, suggesting such valves would have been ready for improvement. *See, e.g.*, Pet. 42–43; Ex. 1003 ¶¶ 99–100 (addressing formation of potential gaps with Schaffer's U-shaped actuating members around certain tools). The improvement, as explained above, is the substitution of a flexible string or wire that would completely surround the tubular member and provide more precise and uniform constriction.

Patent Owner further argues that any improvement from Petitioner's proposed modification would only arise if one assumes Schaffer's highly-compliant third central seal member material was not used in Schaffer's valves. PO Resp. 49–53 (citing Ex. 2008 ¶ 116); PO Sur-reply 8–9 (arguing Schaffer's valve already seals completely via the highly compliant seal member 165 that can conform to the shape of one or more inserted instruments (citing Ex. 2008 ¶¶ 110–111; Ex. 1005 ¶¶ 60, 68)). Yet Patent

[25] Dr. Zalesky also testified on cross-examination, in a manner at odds with his declaration, that he had no opinions on, and had not considered, whether Schaffer's unmodified valve would leak when non-round tools are inserted through the lumen. Ex. 1021, 134:4–18; *see* PO Sur-reply 9–10 (citing, e.g., Ex. 2008 ¶ 108).

Owner argues that Schaffer requires the highly-compliant third central seal member material and omitting it is unreasonable. PO Sur-reply 8–9 (citing testimony allegedly confirming the third seal member 165 is included in every illustrated embodiment in Schaffer, including Figures 30–34 (e.g., Ex. 2007, 69:12–70:3, 70:5–71:23, 73:13–77:3)).

We disagree with Patent Owner's argument because, when obviousness is the issue, the prior art's teachings are not limited to the art's examples and preferred embodiments. *Merck & Co., Inc. v. Biocraft Labs., Inc.*, 874 F.2d 804, 807 (Fed. Cir. 1989). The third central seal member comprising a highly-compliant material is preferred, but not required, in Schaffer. *See, e.g.*, Ex. 1005 ¶ 59 ("In one embodiment, the third central seal member 165 includes material 166 that is highly elastic, deformable, compliant and yet virtually non-compressible," and "in one option" such material "is extremely soft and compliant and intrinsically 'sticky'"); *see also id.* (describing the highly-compliant material forming the third central seal member "[f]or illustrative purposes only"). Moreover, in introducing the embodiment of Figures 30–34, Schaffer discloses that the valve's "seal module 100 is formed of *one or more seal members*" and "[i]n another option, *the seal module 100 and/or any of its respective seal members can be formed of one or more materials*, including their relative properties, as discussed above." *Id.* ¶ 75 (emphasis added). We find that Schaffer suggests that the third central seal member with its highly compliant seal member material is optional (even if preferred). Ex. 1003 ¶ 100 (testifying that Schaffer's seal module may be made of various materials, including modified vinyl, silicone, polyurethane, and combinations or modifications thereof); Ex. 1020 ¶ 32 (testifying the highly-compliant materials for the third seal member are optional and, according to Schaffer, the same portion

of the valve could be made from, e.g., silicone or polyurethane that would lack such characteristics (citing Ex. 1005 ¶¶ 59, 81))[26]; Ex. 1019 (Zalesky Tr.), 163:7–13 ("Q. Is it your opinion that Schaffer's seal member must be made from a sticky or gelatinous substance? . . . A. My understanding is a gelatinous material is one embodiment but not necessary.").

Patent Owner's argument that Petitioner's proposed modification could provide a less effective seal in certain scenarios is unavailing. PO Resp. 52–53 (showing alleged "Gaps" when a string is used and two instruments are inserted side-by-side). First, obviousness does not require that a proposed modification of the prior art provide superior performance in all possible circumstances in which the modified device might be used. Combinations that "may be inferior for certain purposes" may still be obvious. *In re Mouttet*, 686 F.3d 1322, 1334 (Fed. Cir. 2012) ("This court has further explained that just because better alternatives exist in the prior art does not mean that an inferior combination is inapt for obviousness

[26] Mr. Thornton also credibly testifies that a POSA would have recognized potential downsides to using a highly-compliant sticky material for the seal member. Pet. Reply 5 (citing Ex. 1020 ¶ 33 (testifying that a sticky material would also have disadvantages insofar as it could impede the lumen from retracting to an uncollapsed configuration when the constricting force is released as intended in Schaffer (Ex. 1005 ¶¶ 54, 77)); Ex. 1005 ¶ 59 (describing "material 166" for a third seal member 165 that "sticks occlusively to itself"). Moreover, Schaffer's broader listing of materials that may be used to form the seal module overlaps with materials used for the similar collapsible elongate members in other asserted art and in the '012 patent. Ex. 1006 ¶ 16 ("cylindrical diaphragm of the valve may be constructed from a[n] elastomeric material such as silicone rubber"); Ex. 1001, 7:26–29 ("elongate member . . . can comprise an elastic, resilient material that may comprise silicone, urethane, ethylene-vinyl acetate, natural or synthetic rubbers or other elastomers known in the art").

purposes"); *In re Fulton*, 391 F.3d 1195, 1200 (Fed. Cir. 2004) ("[O]ur case law does not require that a particular combination must be the preferred, or the most desirable, combination described in the prior art in order to provide motivation for the current invention.").

Second, Patent Owner's suggestion that Schaffer's valve could provide a better seal in the illustrated two-instrument example presumes that Schaffer's valve includes the highly compliant seal module material that is capable of deforming to fill in those interstices between the two instruments. *Id.* (citing Ex. 1005 ¶ 68). That material is optional, as discussed above. Without that material, it is not evident that Schaffer's two U-shaped actuating members would outperform Hartley's string or Eller's wire in the hypothetical two-instrument scenario. Ex. 1020 ¶ 35 (testifying "Patent Owner does not explain how the illustration would be any different if the string/wire were replaced with two U-shaped actuating members" and "[b]ecause of the non-compliant seal depicted in the illustration, the same gaps would exist with U-shaped actuating members").[27]

Patent Owner's suggestion that Petitioner (based on argument in a related proceeding) agrees gaps will form whether rigid U-shaped actuating members or a string/wire is used misunderstands Petitioner's argument in

[27] The '012 patent, with the use of its filament (e.g., one or more strings or wires), discloses that it provides a "robust" seal around a wide range of tool sizes and shapes, "as well as around multiple tools of differing sizes simultaneously." *See, e.g.*, Ex. 1001, 2:7–14. We do not see why the proposed modification of Schaffer to include a flexible string/wire would provide a seal any less effective than what the patent purports to describe when single or multiple tools are used. Any suggestion by Patent Owner that a flexible string or wire would be unable to provide at least a suitable seal in these circumstances is, thus, also at odds with its own patent.

support of obviousness based on the combination of Schaffer with Hartley or Eller. PO Sur-reply 11–13 (citing certain assertions by Petitioner in IPR2024-01157, Paper 1 at 32; Ex. 1020 ¶ 35). Petitioner, in the 1157 IPR, was addressing gaps that might exist if Schaffer's U-shaped members were made to be flexible and yet each member otherwise remained fixed to its respective actuator button at two points of attachment. *See* IPR2024-01157, Paper 18 at 23–24 (arguing the two fixed attachment points for each actuator "can prevent the U-shaped actuating members from completely conforming to the exterior of a tool" in some cases (e.g., tool with smaller diameter than the distance between the points of attachment on a single button)). That is not germane to Grounds 3 and 4, where Hartley's string or Eller's wire replaces Schaffer's actuating members and is looped at least one time around the central lumen and the opposing ends of that string/wire are attached at one point to opposing actuator buttons. *See, e.g.*, Pet. 43–46 (demonstrative illustrating the combination); Ex. 1003 ¶¶ 104–108 (testifying how this modification would be made and why the POSA would have reasonably expected success with it).[28] For reasons already explained above, we find that the proposed modification would have provided an expected benefit

[28] Patent Owner also characterizes Petitioner's argument here as a "flip-flop" from what Petitioner argued in the 1157 IPR. PO Sur-reply 11–12, 17–18; Tr. 36:16–37:14 (colloquy between counsel and the Board about the alleged flip-flop). That is not accurate. In the 1157 IPR, Petitioner advanced one obviousness theory where Schaffer's two actuating members are made to "resemble" two flexible ribbons (a theory that we rejected and not raised here), and another obviousness theory based on the proposed modification of Schaffer valve with Hartley's string or Eller's wire (the same as argued here), which theory we found persuasive. *See* IPR2024-01157, Paper 35 at 38–40 (addressing Ground 2), 41–68 (addressing Grounds 3 and 4). Presenting multiple, alternative theories in a related case does not undermine Petitioner's argument here.

insofar as the string or wire can more precisely and uniformly constrict the lumen around its entire circumference against various tools, such as a large-bore, round cross-sectioned catheter.

We also find unpersuasive Patent Owner's argument that the proposed modification of Schaffer changes its principle of operation. PO Resp. 71–76. Patent Owner addresses Schaffer's disclosures related to "forcible disengagement" and further references "durability" and "ease of manufacturing," but does not explain persuasively why those considerations constitute Schaffer's principle of operation. *Id.*; Pet. Reply 8 ("PO presumes that forcible disengagement, easy assembly, and durability define Schaffer's 'principle of operation'" but "PO identifies no part of Schaffer that supports this presumption and none exists"). For reasons discussed below, we define Schaffer's principle of operation differently and, in any event, find that the proposed modification of Schaffer is not materially at odds with the considerations noted by Patent Owner: durability; forcible disengagement; and easy manufacture/assembly.

We generally agree with Petitioner's articulation of Schaffer's principle of operation. Pet. Reply 8–9. As Petitioner notes, Schaffer's abstract and background explain that Schaffer describes valves intended to seal with or without an instrument in place. *Id.* (citing Ex. 1005, Abstract, ¶ 8). The valves do so by applying a constricting or compressing force on a tube to seal against the passage of fluid or gas. *See, e.g.*, Ex. 1005 ¶¶ 75–77 (describing aspects of the embodiment in Figs. 30–34). Some embodiments use, for example, spring-actuated buttons to apply that force to the tube, with that force being transferred to the tube by U-shaped actuating members. *Id.* Other embodiments use, for example, a separate tool such as a "clamp" or "forceps" to provide an occlusive side force or "squeezing" on the seal

module to provide a seal. *See, e.g.*, *id.* ¶ 74, Fig. 27 (showing clamp 300). Schaffer explains that the compressed tube can "retract to an uncollapsed configuration" when the force is released, thereby reestablishing fluid flow. *See, e.g.*, *id.* ¶ 77. Thus, we find that Schaffer's principle of operation is to use spring-actuated buttons (or another modality, such as a clamp) to apply a constricting or compressing force (e.g., via U-shaped members like shown in Figs. 30–34) to selectively collapse and release the tube, thereby selectively closing and opening the valve to fluid flow. Ex. 1020 ¶¶ 38–39. This principle of operation is materially unchanged if Hartley's string or Eller's wire is substituted for Schaffer's U-shaped actuating members. Ex. 1003 ¶¶ 101–108; Ex. 1020 ¶¶ 38–39.

Turning to the three considerations raised by Patent Owner, we start with "durability." As we discussed above, Schaffer discloses a need for a "durable" stasis valve. Ex. 1005 ¶ 8. Beyond this background mention, it is not clear that durability defines Schaffer's principle of operation. But assuming it did, there is insufficient evidence here to suggest that the proposed modification of Schaffer would lack durability. Ex. 2008 ¶ 154. The evidence, on balance, supports the opposite conclusion. Eller, for instance, teaches that its flexible wire can be comprised of braided materials, polypropylene, polyurethane, stainless steel, or titanium. Ex. 1007, 15:41–56. Materials such as these would have been considered extremely durable. *See, e.g.*, Ex. 1020 ¶ 48 (testifying a POSA in 2017 would have known of many durable materials usable for forming a string or wire in a medical device, "such as polypropylene or other suture material"); Ex. 1019 (Zalesky Tr.), 169:16–170:11 (testifying that "polypropylene, polyurethane, suture catgut are amazingly durable" as well as "small-braid" wire, and a POSA would have had access to those materials before 2017).

Turning to "forcible disengagement," this phrase (or a derivative thereof) is, by our count, mentioned only twice in Schaffer. Ex. 1005 ¶¶ 77 ("Such movement allows each engaged actuating member 55 to *forcibly disengage* opposing outer walls 27 of seal module 100 allowing the portion 108 of the containment structure 160 to retract to an uncollapsed configuration.") (emphasis added), 80 (substantially the same disclosure). We are skeptical that this phrase, which appears scarcely and without any special emphasis in Schaffer, somehow defines the principle of operation.

Regardless, we are unpersuaded that Hartley's string or Eller's wire—in the modified valve of Schaffer—would not "forcibly disengage" the seal module. When the buttons are pressed, a force is applied that releases the actuating members (or the string/wire in the case of the modification) to disengage the seal module, allowing it to return to an open configuration. Ex. 1020 ¶ 41. Patent Owner appears to interpret "forcibly disengage" as meaning that the actuating members must physically separate and come out of contact with the seal module. PO Resp. 72 (stating that, if Schaffer's seal module expands against Hartley's string when tension is released, the string would never forcibly disengage the seal module). Schaffer never shows that. "Schaffer always depicts the actuating members in contact with the seal module," whether the valve is open or closed. Pet. Reply 9; Ex. 1005, Figs. 32–34; Ex. 1008, Figs. 32–34; Ex. 1021 (Zalesky Tr.), 144:15–146:8 (admitting, "[a]s depicted here, the compressive elements appear to be in contact" with the seal module). And, even if "forcible disengagement" or other disclosure in Schaffer tends to show that the actuating members are rigid, Petitioner persuades us that a POSA would have understood the substitution of flexible structures—Hartley's string or Eller's wire—as potentially beneficial, rendering the *claimed subject matter* obvious.

Axonics, Inc. v. Medtronic, Inc., 73 F.4th 950, 957 (Fed. Cir. 2023) (noting the "inquiry is not whether a relevant artisan would combine a first reference's feature with a second reference's feature to meet requirements of the first reference that are not requirements of the claims at issue"); *Intel Corp. v. Qualcomm Inc.*, 21 F.4th 784, 800 (Fed. Cir. 2021) (holding "the intended purpose of [the prior art] does not control" the § 103 inquiry).

Turning to the last consideration offered by Patent Owner that allegedly defines Schaffer's principle of operation, easier manufacture and assembly, we disagree that such a consideration undermines Petitioner's challenge in Grounds 3 and 4. The manufacture and assembly techniques cited by Patent Owner are only examples in Schaffer. Ex. 1005 ¶¶ 82–83 (describing "valve 10, *in one option*, is made from machining pre-existing amounts of metals and/or plastics"; describing, "[i]n an example where the stasis valve 10 includes two actuators" that actuator buttons may be completely compressed and held while a seal module is inserted through the valve's housing). We are unpersuaded that such optional manufacturing or assembly techniques translate into a definition of Schaffer's principle of operation for its valves.

Patent Owner contends that substituting Hartley's string or Eller's wire would make valve assembly more challenging. PO Resp. 73–76 (citing Ex. 2008 ¶¶ 143–154). We credit Mr. Thornton's testimony, however, that a skilled artisan would have been aware of other manufacturing and assembly methods that could have been employed to substitute a flexible string or wire without much difficulty. Ex. 1020 ¶¶ 45–47 (testifying, *inter alia*, that a tapered fixture could have been used to introduce the seal module through the looped string/wire already attached to the buttons, or Schaffer's housing could be formed in two pieces that are assembled and closed after the

internal components (springs, string, etc.) are configured). Moreover, as discussed above, Hartley and Eller disclose that many ways were known for attaching the ends of the string or wire to an actuator (knotting, welding, friction fit, adhesives) in a hemostasis valve, and Eller suggests that such teachings are not limited to rotary actuators like exemplified in Hartley or Eller. Ex. 1006, Figs. 3–4; Ex. 1007, 8:27–44, 14:37–53. We find that the preponderance of the evidence supports Petitioner and that the engineering techniques needed to implement the proposed modifications would have been routine and straightforward.

In its Sur-reply, Patent Owner contends that Schaffer's principle of operation and purpose is a device that seals yet provides "balance" across many considerations: closing force, opening force, friction, compression, and durability. PO Sur-reply 26. Petitioner's proposed combination allegedly ignores Schaffer's purpose and fundamentally changes how Schaffer seals. *Id.* Patent Owner's shifting-sands definition of what represents Schaffer's purpose and principle of operation aside, we disagree that the purpose of Schaffer's valve would be fundamentally changed by Petitioner's combination of the art. To the contrary, the cited art suggests that skilled artisans would have known how to use flexible strings and wires in a balanced way to the constrict and seal a compressible fluid lumen in hemostasis valves—with or without instruments in place. *See, e.g.*, Ex. 1006 ¶ 37 (describing a constriction valve using a flexible string that "will close over a range of diameters of devices . . . or can close completely down to be self sealing"); Ex. 1007, 17:47–18:8 (describing a valve using a flexible wire that can provide a seal around one or more medical devices passed through a fluid sleave); *see also id.* at 8:27–44 (suggesting the skilled artisan would be able to select and apply to "any suitable actuator" that is capable of moving

between first and second configurations). And, to the extent Schaffer's valve is being changed as proposed, such changes would have been expected to provide potential advantages for the reasons discussed above.

Patent Owner's argument that the modifications proposed under Grounds 3 and 4 are not "simple" because no single prior art reference shows a hemostasis valve with a flexible string or wire attached to two actuators is unavailing. Patent Owner's argument is tantamount to a complaint that none of Schaffer, Hartley, or Eller is anticipating. The challenge is obviousness and "it suffices . . . that a person of ordinary skill in the art would have been motivated to combine the prior art in a way such that the combination discloses the claim limitation." *Masimo Corp. v. Apple Inc.*, No. 2022-1894, 2024 WL 111647 at *3 (Fed. Cir. Jan. 10, 2024) (internal quotation marks omitted); *Fleming*, 28 F.4th at 1222. As explained above, we find that a POSA would have been motivated to make the proposed changes and that the implementation details needed to effectuate those changes would have drawn on known techniques (e.g., knotting, etc.), obviously extended to a linear actuator valve like shown in Schaffer. Altogether, we find that Petitioner's proposed modification would require no more than ordinary skill, and we credit Mr. Thornton's testimony on that issue. *See, e.g.*, Ex. 1003 ¶¶ 104–108, 118–121. Further, even assuming the modifications made some aspects of manufacturing more challenging as argued by Patent Owner, the tradeoff is a valve that would have been expected to more precisely constrict the lumen around at least some types of inserted surgical tools—yielding a worthwhile benefit, as discussed above.

Finally, Patent Owner's argument that "more plausible" changes would have been made if there was a sealing problem with Schaffer's valve is flawed and fails to undermine Petitioner's challenge. PO Resp. 61–65

(arguing a POSA could have more simply adjusted Schaffer's spring force or the properties of the seal module). That a POSA might have considered the alternative changes to Schaffer's valve suggested by Patent Owner—or even considered those changes to be superior to those proposed by Petitioner—does not negate a showing of obviousness. Obviousness is not limited to the best or simplest solution. *Intel*, 21 F.4th at 800 ("[It is] not necessary to show that a combination is the *best* option, only that it be a *suitable* option.") (internal quotation marks omitted). For the reasons explained by Petitioner and Mr. Thornton, which we discussed above, we find the POSA would have had reasons to modify Schaffer's valve as proposed and reasonably expected the modified valve would be, not only suitable, but improved.[29]

c) Conclusion

Upon considering all arguments and evidence presented through trial, we determine that Petitioner has shown by a preponderance of the evidence that claims 1–9 would have been obvious under Grounds 3 and 4.

H. Grounds 6 & 7: Obviousness over Schaffer, Hartley, and Garrison, or Schaffer, Eller, and Garrison

For essentially the reasons provided above under Grounds 3 and 4, we determine that Petitioner has shown by a preponderance of the evidence that

[29] The repeated assertion in Patent Owner's papers (e.g., PO Resp. 4, 42, 65) that Petitioner's modification of Schaffer invokes impermissible hindsight does not amount to separate argument. *In re Cree, Inc.*, 818 F.3d 694, 702 n.3 (Fed. Cir. 2016) (viewing an "impermissible hindsight" argument as "essentially a repackaging of the argument that there was insufficient evidence of a motivation to combine the references"). The reasons for modifying Schaffer with the disclosures of Hartley or Eller are supported in the evidence cited by Petitioner and not based on knowledge gleaned only from the '012 patent's disclosure. *In re McLaughlin*, 443 F.2d 1392, 1395 (CCPA 1971).

claims 1–9 would have been obvious over Schaffer, Hartley, and Garrison (Ground 6), and Schaffer, Eller, and Garrison (Ground 7). Petitioner's reliance on Garrison is as further evidence that, if the preamble of claim 1 is interpreted as limiting, the use of aspiration catheters in combination with hemostasis valves was well known and would have been obvious prior to the effective date of the '012 patent. *See* Pet. 83–93 (citing, e.g., Ex. 1011, Fig. 34, ¶¶ 48, 98, 131–134; Ex. 1003 ¶¶ 175–199). We credit this additional evidence from Petitioner related to Garrison and its combination with Schaffer and Hartley or Eller.

Patent Owner does not contest Petitioner's arguments and evidence related to Garrison, arguing only that Garrison, even if considered in combination with the other asserted art, does not make up for the alleged deficiencies of Schaffer, Hartley, and Eller. PO Resp. 77. Because we are unpersuaded that the combinations of Schaffer and Hartley, or Schaffer and Eller are deficient in the manner argued by Patent Owner, we similarly reject Patent Owner's argument under Grounds 6 and 7.

IV. CONCLUSION[30]

Petitioner has shown by a preponderance of the evidence that the challenged claims are unpatentable as summarized in the table below.

Claims	35 U.S.C. §	Reference(s)/Basis	Claims Shown Unpatentable	Claims Not shown Unpatentable
1–9	102	Schaffer		1–9
1–9	103	Schaffer		1–9
1–9	103	Schaffer, Hartley	1–9	
1–9	102	Schaffer, Eller	1–9	
1–9	103	Schaffer, Garrison		1–9
1–9	103	Schaffer, Hartley, Garrison	1–9	
1–9	103	Schaffer, Eller, Garrison	1–9	
Overall Outcome			1–9	

[30] Should Patent Owner wish to pursue amendment of the challenged claims in a reissue or reexamination proceeding subsequent to the issuance of this decision, we draw Patent Owner's attention to the April 2019 *Notice Regarding Options for Amendments by Patent Owner Through Reissue or Reexamination During a Pending AIA Trial Proceeding*. *See* 84 Fed. Reg. 16,654 (Apr. 22, 2019). If Patent Owner chooses to file a reissue application or a request for reexamination of the challenged patent, we remind Patent Owner of its continuing obligation to notify the Board of any such related matters in updated mandatory notices. *See* 37 C.F.R. § 42.8(a)(3), (b)(2).

V. ORDER

In consideration of the foregoing, it is hereby:

ORDERED that Petitioner has proved by a preponderance of the evidence that claims 1–9 are unpatentable;

FURTHER ORDERED that, because this is a Final Written Decision, parties to the proceeding seeking judicial review of the decision must comply with the notice and service requirements of 37 C.F.R. § 90.2.

FOR PETITIONER:

Joshua J. Stowell
Joseph R. Re
Brian C. Barnes
KNOBBE, MARTENS, OLSON & BEAR, LLP
Joshua.Stowell@knobbe.com
Joe.Re@knobbe.com
Brian.Barnes@knobbe.com

FOR PATENT OWNER:

Joseph Hamilton
Paul Parker
PERKINS COIE LLP
hamilton-ptab@perkinscoie.com
parker-ptab@perkinscoie.com