Clin Chest Med 24 (2003) 315–342

CLINICS IN CHEST MEDICINE

Continuous positive airway pressure: new generations

Francoise J. Roux, MD, PhD[a,b,*], Janet Hilbert, MD[a,c]

[a]*Section of Pulmonary and Critical Care Medicine, Yale University School of Medicine, 333 Cedar Street, Post Office Box 208057, New Haven, CT 06520-8057, USA*
[b]*West Haven VA Medical Center Sleep Laboratory, 950 Campbell Avenue, West Haven, CT 06516, USA*
[c]*Yale Center for Sleep Medicine, 333 Cedar Street, Post Office Box 208057, New Haven, CT 06520-8057, USA*

Continuous positive airway pressure (CPAP) therapy for obstructive sleep apnea (OSA) was first described in 1981 [1]. Since that time, CPAP has become the mainstay of therapy for OSA [2]. CPAP effectively prevents repetitive upper airway obstruction, most likely by acting as a pneumatic splint [3], and is associated with improved respiratory [1,4] and sleep parameters [5] and clinical outcomes [5–15]. CPAP therapy continues to evolve, and, since the last review of positive airway pressure therapy in this *Clinics* issue [16], further advancements have been made in newer generations of CPAP. Automatic (also known as automated, autotitrating, or autoadjusting) positive airway pressure (APAP) devices detect and respond to changes in upper airway resistance by variably increasing or decreasing the pressure generated. As such, APAP potentially may be able to (1) assist with the initial diagnosis of OSA, (2) act therapeutically in patients with OSA instead of conventional CPAP, and (3) assist with CPAP titration to determine an effective conventional CPAP pressure in patients with confirmed OSA. In this article, the authors present an updated review of the technical aspects of APAP and the diagnostic, therapeutic, and titrating capabilities. They also discuss the current clinical recommendations for use of these devices.

* Corresponding author. Section of Pulmonary and Critical Care Medicine, Yale University School of Medicine, 333 Cedar Street, PO Box 208057, New Haven, CT 06520-8057.

E-mail address: francoise.roux@yale.edu (F.J. Roux).

Technical aspects of automatic positive airway pressure

Background

The original CPAP device described by Sullivan et al in 1981 [1] (Fig. 1) consisted of a vacuum cleaner blower motor with variable speed control installed in a box lined with acoustic material. This was connected to a wide bore tube, into which were inserted soft plastic tubes to fit into the patient's nares and which then distally narrowed with mechanical resistance. A range of pressures could be generated. Although effective in maintaining the patency of the upper airway in patients with OSA, the original CPAP machines in the 1980s were heavy (approximately 15–20 lbs), loud, and fairly simple, with limited capabilities.

Over the past 20 years, machines have become lighter (typically ranging from 3.5–6 lbs), quieter, and more sophisticated. In some CPAP machines, microprocessors allow compliance data (most currently using mask-on-time rather than the earlier machine-on-time) to be stored for variable amounts of time and downloaded. Various options, including specialized filters, ramps, automatic altitude adjustment, automatic leak compensation, internal power adaptors, and internal humidification, have been incorporated into various machines. Options for CPAP accessories, including nasal and oronasal masks, headgear, and humidification, also have increased, seemingly exponentially.

Another level of sophistication has been added with the development of APAP devices. APAP devices

0272-5231/03/$ – see front matter © 2003, Elsevier Inc. All rights reserved.
doi:10.1016/S0272-5231(03)00017-0

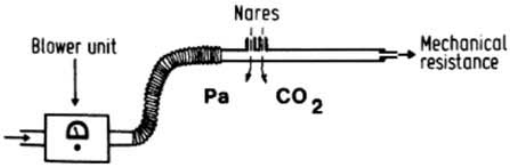

Fig. 1. Diagram of apparatus used to provide CPAP from the nares. In the experimental system, pressure (P_a) was measured via a catheter in one nasal tube, and airway CO_2 (CO_2) was sampled via a catheter in the other nasal tube. (*From* Sullivan CE, Issa FG, Berthon-Jones M, Eves L. Reversal of obstructive sleep apnoea by continuous positive airway pressure applied through the nares. Lancet 1981;1:862; with permission.)

use noninvasive methods to detect evidence of upper airway obstruction, including snoring, apneas, hypopneas, or airflow limitation. As shown in Fig. 2, a diagram of prototype device that detects and responds to pharyngeal wall vibration [17], APAP devices incorporate one or more sensors to detect a signal (in this case, a pressure transducer to detect pharyngeal wall vibration) and a central processing unit to interpret the signal(s) (according to specific diagnostic algorithms) and determine the resultant voltage for the APAP blower in response to the signal(s) (according to specific therapeutic algorithms). Additional band filters and rectifiers are needed to process the signal, and analog-digital and digital-analog converters also are required downstream and upstream of the central processing unit. Technology does not come without a price; the cost of currently available APAP devices can be 1.5 to 3 times that of conventional CPAP machines, depending on incorporated features. APAP devices can function exclusively in a diagnostic mode and recognize and record abnormal respiratory events without correcting them. APAP devices also function in a therapeutic mode, responding to events (or lack of them) by adjusting the positive airway pressure accordingly.

Detection of upper airway obstruction by automatic positive airway pressure

As shown in Table 1, current APAP devices detect multiple abnormalities, such as snoring, apneas, hypopneas, or flow limitation, which are surrogates of upper airway obstruction. Clinical studies have been published in the peer-reviewed literature to date on versions of the Autoset (ResMed, Sydney, Australia) [18–32], Goodknight 418A (Puritan Benett/Malinckrodt, Les Ulis, France) [33] and its precursor, REM + auto (SEFAM/Nellcor Puritan Benett, Nancy, France) [34–37], Horizon AutoAdjust (DeVilbiss/Sunrise Medical, Somerset, PA) [38–42], Morphee Plus/Cloudnine (Pierre Medical/Nellcor Puritan Benett, Verrieres-Le-Buisson, France, and Minneapolis, MN) [41,43–46], REM + with MC + (SEFAM/Nellcor Puritan Benett) [47], Somnosmart (Weimann, Ham-

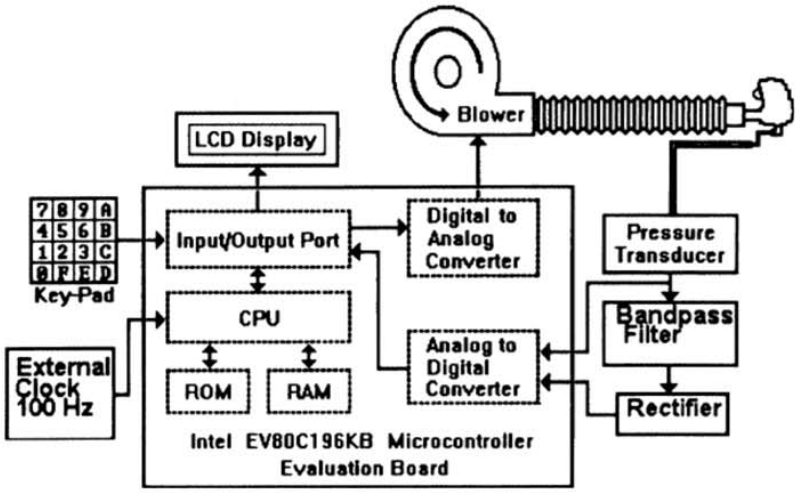

Fig. 2. Diagram of prototype APAP system's major components. LCD, liquid crystal display; CPU, central processing unit; ROM, read only memory; RAM, random access memory. (*From* Behbehani K, Yen FC, Burk JR, Lucas EA, Axe JR. Automatic control of airway pressure for treatment of obstructive sleep apnea. IEEE Trans Biomed Eng 1995;42:1007; with permission.)

Table 1
Comparison of parameters detected by automatic positive airway devices

Device	Manufacturer	Parameters detected			
		Sn	A/H (flow)	A/H (FOT)	FL
Autoset Autoset Clinical Autoset Portable Autoset T Autoset Spirit	ResCare/ResMed, Sydney, Australia, San Diego, CA, Saint Priest, France	+	+		+
Eclipse Auto	Taema, Antony, France	+	+		
Goodknight TM418A	Puritan Benett, Pleasanton, CA/Mallinckrodt, Les Ulis, France	+	+		
Goodknight TM418P	Puritan Benett, Pleasanton, CA/Mallincrodt, Les Ulis, France	+	+		+
Horizon AutoAdjust	DeVilbiss Healthcare,Inc./Sunrise Medical, Somerset, PA, Parcay Meslay, France	+	+		
Morphee Plus Cloudnine	Pierre Medical, Verrieres-Le-Buisson, France/Nellcor-Puritan Benett, Minneapolis, MN		+		
REM + with MC + REM + Auto	SEFAM/Nellcor-Puritan Benett, Nancy, France	+	+		
REMstar Auto	Respironics Inc., Murrysville, PA	+	+		+
Somnosmart	Weiman, Hamburg,Germany			+	
Tranquility Auto	Respironics Inc., Murrysville, PA		+		+
Virtuoso LX	Respironics Inc., Murrysville,PA	+			

Abbreviations: Sn, snoring (detected by mask pressure vibration); A, apnea; H, hypopnea; flow, airflow detected by pneumotachograph, nasal pressure, or changes in compressor speed; FOT, forced oscillation technique; FL, flow limitation (detected by flow versus time profile).

burg, Germany) [48–53], and Virtuoso (Respironics, Murrysville, PA) [33,54–56]. Sensors used to detect evidence of upper airway obstruction and diagnostic algorithms vary among devices.

Most, but not all, APAP devices have the capability of detecting snoring. Snoring is typically detected by a high frequency response pressure transducer in the presence of mask pressure vibration [17,25, 34,37,47,54,57]. The signal is then band-pass filtered using high pass and low pass filters specific to the device (eg, 30 Hz and 280 Hz in the REM + auto [34,37] and the REM + with MC plus [47] devices and 20 Hz and 120 Hz in another prototype [17]), and the amplitude is then analyzed to detect amplitude variations, such as snoring.

Many APAP devices also can identify apneas, as indicated by absence of flow or pressure, and hypopneas, as indicated by decrements of flow or pressure. Early versions of the Autoset in diagnostic mode detected apneas (and later, apneas and hypopneas) by analyzing the pressure tracing from nasal prongs [19], whereas later therapeutic models detected changes in flow with a built-in pneumotachograph [30]. The Horizon AutoAdjust [40] also uses a pneumotachograph to detect apneas and hypopneas. The Morphee Plus determines patency of the upper airway by monitoring the breath-by-breath difference between maximal inspiratory and expiratory flow based on machine compressor speed [43]. The default definitions of apneas or hypopneas used by the detection software vary with the specific device and software version, as does the ability for the clinician or investigator to change the detection algorithm. For example, on the Horizon Autoadjust, the criteria for

hypopnea (eg, percent flow decrement and duration) can be programmed [39].

Forced oscillation technique (FOT), initially described by DuBois et al in 1956 [58], is a unique noninvasive method that detects changes in airway resistance or impedance [59]. Since the initial description, this technique has been validated in a research model of airway obstruction [60] and in patients with OSA [61,62]. A pump, connected to the CPAP system, generates a sinusoidal pressure signal at a constant frequency during spontaneous breathing; respiratory impedance (Z) or respiratory system resistance (R_{rs}) is derived from the oscillatory pressure and flow signal at the nasal mask. In patients with OSA, apneas are associated with sustained increases in impedance throughout the respiratory cycle, whereas hypopneas are associated with intermittent increases in impedance (Fig. 3). With CPAP treatment, as CPAP is progressively increased to the effective range (Fig. 4), breathing flow normalizes, esophageal pressure swings become less negative, and respiratory resistance or impedance decreases to normal. This technique has since been used to control the pressure algorithm in several devices, including the Somnosmart [48–53] and other prototypes [60,63].

As shown in Table 1, few of the currently available devices can detect flow limitation. The characteristic inspiratory airflow flattening seen with increased upper airway resistance [64] may be the most sensitive indicator of upper airway obstruction [65,66]. In the Autoset, the flow-time profile (with flow measured by pressure transducer or pneumotachograph) is expressed as a curvature index (Fig. 5) [25]. A low curvature index suggests inspiratory airflow limitation, whereas a higher curvature index suggests more normal airflow.

Adjustment of positive airway pressure by automatic positive airway pressure

Once a respiratory event is detected, APAP devices increase the pressure automatically in a progressive fashion until an effective therapeutic pressure is reached. Conversely, in the absence of respiratory events, the pressure level decreases until evidence of upper airway obstruction recurs. APAP devices are inherently unstable [67]. The algorithms for pressure adjustment vary among specific APAP devices. Even within a specific device, the amount of pressure increase and the time course of pressure change vary

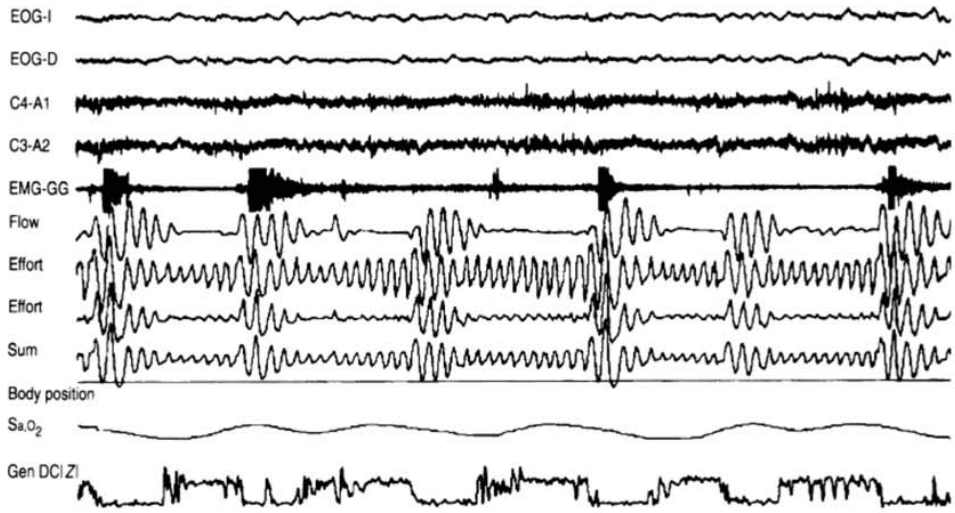

Fig. 3. Representative compressed polysomnographic recording (6 epochs, 3 minute). Note that impedance (Z) increases during apnea and is low during arousal. The pattern of Z shows a cyclic increase before apnea and during hypopnea (the last event in this figure). EOG, electrooculogram; C4-A1 and C4-A2, electroencephalogram channels; EMG-GC, chin electromyogram; Flow, flow by pneumotachograph; Effort, effort by thoraco-abdominal bands; Sum, thoraco-abdominal sum; SaO_2, arterial oxygen saturation; Gen DC Z, respiratory impedance. (*From* Badia JR, Farre R, Montserrat JM, Ballester E, Hernandez L, Rotger M, et al. Forced oscillation technique for the evaluation of severe sleep apnoea/hypopnoea syndrome: a pilot study. Eur Respir J 1998;11:1128; with permission.)

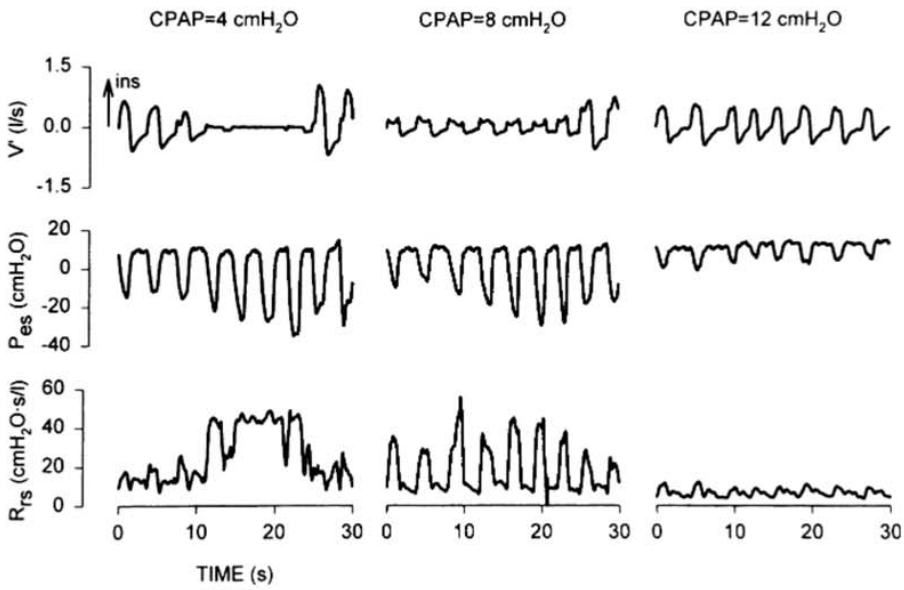

Fig. 4. Breathing flow (V), esophageal pressure (P_{es}), and respiratory resistance (R_{rs}) in a patient at different levels of CPAP. Note that at low subtherapeutic CPAP levels (CPAP = 4 cm H_20), obstructive apnea—characterized by minimal V, wide swings in P_{es}, and high R_{rs}—occurs. With increasing, but still suboptimal CPAP (CPAP = 8 cm H_20), hypopnea occurs, characterized by variable R_{rs}. With therapeutic CPAP (CPAP = 12 cm H_20) and return of normal V and P_{es}, R_{rs} decreases to normal. (*From* Navajas D, Farre R, Rotger M, Badia R, Puig-de-Morales M, Montserrat JM. Assessment of airflow obstruction during CPAP by means of forced oscillation in patients with sleep apnea. Am J Respir Crit Care Med 1998;157:1526; with permission.)

with the specific respiratory event detected, with larger changes for apneas and smaller changes for more subtle upper airway obstruction, such as snoring or flow limitation. For example, in the Autoset device, positive pressure increases in response to snoring, apneas, and flow limitation [25]: snoring (depending on the loudness of the snoring) results in an increase in pressure by 1 cm H_2O/breath; flow limitation (depending on the curvature index) results in an increase in pressure by 1.5 cm H_2O/minute; apneas (depending on calculated airway conductance) result in an increase in pressure by 1 cm H_2O/

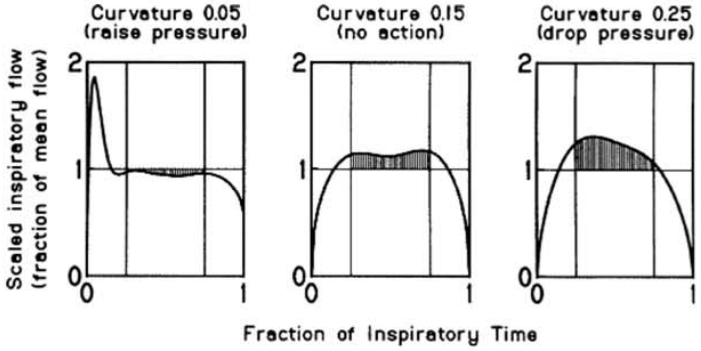

Fig. 5. Schematic of Autoset software response to various flow versus time curves. The curvature index is a measure of the deviation from unit scaled flow over the middle 50% of inspiratory time (indicated by shading). (Left) A severely flattened curve with a low curvature index typical of inadequate CPAP pressure. The software responds by increasing CPAP pressure. (Center) A breath showing slight flattening. The CPAP pressure remains unchanged. (Right) Rounded curve with high curvature index; the software assumes that this breath represents hyperadequate CPAP pressure. The software reduces the CPAP pressure. (*From* Teschler H, Berthon-Jones M, Thompson AB, Henkel A, Henry J, Konietzko N. Automated continuous positive airway pressure titration for obstructive sleep apnea syndrome. Am J Respir Crit Care Med 1996;154:734; with permission.)

15 second of apnea. If no further abnormalities are detected, pressure decreases with a time constant of 20 minutes for snoring and flow limitation and 40 minutes for apnea. In contrast, in the Morphee Plus, if upper airway obstruction is detected (based on changes in compressor speed), the pressure increases between 1 and 3 cm H_2O at a rate of 1 cm H_2O/second depending on the severity of the respiratory abnormality. In the absence of a respiratory abnormality, pressure decreases at a rate of 1 cm H_2O / 30 seconds [43]. In some devices, the clinician can change the default algorithms [39].

Most APAP devices operate in the range of 3 to 4 to 18 to 20 cm H_2O pressure, and the upper and lower limits of acceptable pressure usually can be set by the clinician. Typically, the pressure starts low and auto adjusts depending on the therapeutic algorithm. Some devices, such as the Morphee Plus [43] and the REM + auto [35], operate around an acceptable range (such as $+2$ cm and -4 cm H_2O) of a reference pressure (with the reference pressure set by the clinician using either a previous CPAP titration or a formula); the clinician also can set the acceptable range or use the default settings for range.

Special issues: detection of leaks, central apneas, and hypoventilation

Mask and mouth leaks and mouth breathing are not uncommon in conventional CPAP titrations, with continuous leaks occurring in 7 of 14 patients in one study [68] and lasting from 4% to 70% of total sleep time. Mouth leaks limited APAP therapy in 2 of 15 patients with OSA using a device based on snoring detection (REM + Control with MC +, with apnea/hypopnea detection disabled) [47]. With the Autoset, leaks in excess of 0.4 L/second occur for an average of 10% of a supervised night and 15% of an unsupervised night [27]. Leaks tend to be interpreted by many APAP systems as apneas or hypopneas and result in increases in pressure, which, in turn, increase leak [69]. Examining the raw flow signal can allow for the detection of leaks [42]. Some devices have algorithms that limit pressure increases when mask pressure goes to zero, which indicates that the mask is off or when there are excessive leaks as detected by mean mask flow [25]. Leak alarms have been incorporated into some units. Some devices, such as the Autoset and the Goodknight 418P, can record leaks during the night for later use in interpretation. In devices that use FOT, mouth leaks can induce false low impedance values and lead to an underestimate of upper airway obstruction, whereas mouth expiration or change in the route of breathing can lead to a false increase in impedance and an overestimate of upper airway obstruction. Incorporating a pneumotachograph along with FOT can be helpful in avoiding misinterpretation of the FOT signal [68].

Another problem for APAP devices is the distinction between central and obstructive apneas. The Autoset software classifies apneas as having closed and open airways through the calculation of airway conductance by modulating the mask pressure during apnea and measuring the resultant induced airflow. The pressure increases for obstructive apneas and for central apneas in which the airway is closed [25]. Using FOT, whereas obstructive apneas are associated with sustained increases in impedance, central apneas can be associated with high or low impedance values, which suggests that different mechanisms may be involved [61]. Cardiac oscillations may be visible in the FOT signal to help distinguish central from obstructive apneas [70]. Many clinical trials of APAP devices have excluded patients at risk for central apnea, such as persons with congestive heart failure [69].

Current APAP devices do not incorporate oximetry and cannot detect sustained oxygen desaturation in the absence of upper airway obstruction. Many clinical trials of APAP have excluded patients at risk for hypoventilation, including persons with chronic obstructive pulmonary disease or other respiratory disease/respiratory failure [69].

Comparison of commercially available automatic positive airway pressure devices

Few studies have been published that directly compare the available APAP devices listed in Table 1. Farre et al [71] used a bench model with a waveform generator to simulate normal breathing, apneas, hypopneas, and flow limitation, with or without snoring, and tested the response of five different APAP devices (AutoAdjust LT, Autoset Portable II Plus, Autoset T, Virtuoso LX, and Goodknight 418P) to different combinations of signals. All these devices responded to snoring; however, they responded differently to various degrees of hypopneas, and some did not even respond to repetitive apneas. The time course of pressure adjustment after normalization of breathing also varied with devices, as did the behavior after a simulated leak. Lofaso et al [33] also used a bench model to study the performance of six commercially available devices (Horizon AutoAdjust, Goodknight 418A, Goodknight 418P, Autoset T, Virtuoso LX, and Eclipse Auto), this time in response to simulated

snoring at varying frequencies and at different CPAP pressures. Threshold pressure-amplitude differences of up to threefold were found across devices, and the sensitivity of snoring detection decreased as CPAP increased in all devices.

A follow-up study was performed in six patients with OSA to test the clinical significance of these findings. The percentage of snoring events followed by a pressure increase was higher in the device that was more sensitive in the bench study (Goodknight 418P) than in the less sensitive device (Virtuoso LX). The only other comparative study in patients reported to date [41] compared the response of two different devices to nasal obstruction induced by local instillation of histamine. One device was regulated by analysis of changes in compressor speed (Morphee Plus), and the other device was regulated by analysis of changes in flow determined with a pneumotachograph (Horizon); neither device analyzed flow versus time curves. The authors found that increases in nasal resistance occurred with histamine and that flow limitation and arousals generally accompanied the increase in nasal resistance. The behavior of the two devices differed and was sometimes paradoxical, however. Mask pressure initially decreased as nasal resistance increased in the Morphee Plus and sometimes subsequently increased, whereas mask pressure did not change with the Horizon. Whether and to what extent these differences between devices impact long-term clinical outcomes is not known.

Role of automatic positive airway pressure in diagnosis of obstructive sleep apnea

Rationale for use of automatic positive airway pressure in diagnosis of obstructive sleep apnea

The diagnosis of OSA is conventionally made by level 1 polysomnography (PSG) performed by a trained technologist who attends the patient (usually in a sleep laboratory), with recording or documentation of sleep and respiratory variables including electroencephalogram, electrooculogram, chin electromyogram, airflow, respiratory effort, arterial oxygen saturation (SaO_2), and body position, with or without leg movement recording [72,73]. In general, the number of respiratory disturbances per hour of sleep (RDI) or the sum of apneas and hypopneas per hour of sleep (AHI) is used as the summary statistic to diagnose OSA and determine the severity of sleep-disordered breathing. It has become increasingly clear that the RDI can vary as much as tenfold [74] depending on the technique used to measure airflow [75] and the definitions used to define specific respiratory events (eg, percent flow change, degree of oxygen desaturation, presence/absence of arousal on encephalogram). The best metric to define OSA and the cutoff between normal and abnormal is controversial [76,77]. The RDI can have internight and intranight variability, and it is possible for OSA to be missed on one night of monitoring [78,79]. Despite these limitations, in the United States, level I PSG is the gold standard for diagnosing OSA and guiding treatment options, and it is against this standard that other options must be compared.

In light of the growing clinical recognition of OSA [80], there have been attempts in the United States and elsewhere [81–83] to perform unattended home monitoring for OSA to reduce the diagnostic waiting time. Portable and generally unattended studies may range from comprehensive portable PSG (level II) to modified portable sleep apnea testing (level III) to continuous single or dual bioparameter recording (level IV). The benefits and limitations of portable monitoring have been reviewed elsewhere in this issue and are not discussed herein. APAP devices have inherent diagnostic capability that is consistent with a level IV recording (or even a level III recording if additional monitoring such as respiratory effort, oximetry, and electrocardiogram or heart rate, with or without body position is added to assessment of airway patency by APAP), and APAP theoretically could be helpful in diagnosing OSA. The rationale for the use of APAP in the diagnosis of OSA is that it might provide an accurate enough diagnosis in some patient groups, it might reduce diagnostic waiting time, and it might reduce health care costs.

Studies that evaluate automatic positive airway pressure for the diagnosis of obstructive sleep apnea

A limited number of published studies have evaluated whether APAP is reliable enough in the diagnostic mode to recognize sleep-disordered breathing (Table 2). All [19–23,28,29,70] except one [42] of these studies were performed in a supervised environment, with concurrent PSG, with airflow during PSG usually [19,21–23,28,29,70] but not always [20] monitored with thermistor. Sometimes these studies were conducted with unselected consecutive patients [19,21,23], but often they were conducted in patients who were suspected of having OSA [20,22,28,29,42,70]. Exclusions were not always stated, but several groups excluded technically unsatisfactory recordings [20,22] or technically unsatisfac-

Table 2
Summary of diagnostic studies of automatic positive airway pressure devices

Author	Device *n*	AHI Mean (SE or SD)	Correlation APAP:PSG (AI:AI) AHI:AHI	Limits of agreement APAP-PSG (AI-AI^{diff}) (95% CI) AHI-AHI^{diff} (95% CI)	Sensitivity at threshold AHI(AI) >5 AHI(AI) >10 AHI(AI) >15 AHI(AI) >20	Specificity at threshold AHI(AI) >5 AHI(AI) >10 AHI(AI) >15 AHI(AI) >20
Gugger et al [19]	Autoset	—	(r = 0.85)	—	—	—
	"Autumn"		—	—	—	—
	27				—	—
					82%	90%
Bradley et al [21]	Autoset	25	—	—	—	—
	Version 2.0	(SE = 4)	r = 0.85	+3.1 (+8.4, −1.6)	—	—
	37				100%	92%
					—	—
Kiely et al [22]	Autoset	19.4	(r = 0.85)	−(−15.5, +10.5)	—	—
	Version 3.03	(SD = 24.7)	r = 0.92	−(−15.5, +13)	85%	87%
	36				100%	92%
					88%	93%
Fleury et al [20]	Autoset	—	(r = 0.98)	+2.6 (−11.6, +6.4)	(100%)	76%
	—		—	—	(100%)	87%
	44				(100%)	—
					(100%)	88%
Mayer et al [29]	Autoset	43.3 (SD = 33.4)	—	—	97%	50%
	—		r = 0.87	−9.6 (−2.2, +23.7)	92%	79%
	95				86%	86%
					79%	93%

Gugger [23]	Autoset	26.2 (SE = 2.9)	(r = 0.95)	(+2.5) (+15.6, −10.6)	—	—
	Version 3.03		r = 0.95	+4.2 (+18.7,10.3)	—	—
	67				—	—
					97%	100%
Rees et al [28]	Autoset	39 (SD = 26)	—	—	—	—
	Version 3.03		r = 0.9[a]	−3.1[a] (+11.2, −17.4)[a]	—	—
	27				—	—
					—	—
Fletcher et al [42]	Horizon	—	—	—	—	—
	63		r = 0.85[b]	—	—	—
					—	—
					—	—
Steltner et al [70]	Prototype	AHI^1= 34.2	—	K_w^1 = 0.45	—	—
	(FOT)	(SD = 17.4)			—	—
	19	AHI^2= 25.4	—	K_w^2 = 0.5	—	—
		(SD = 19.6)			—	—

Abbreviations: AHI, apneas plus hypopneas per hour (AHI determined by APAP per recording time and determined by PSG per hour of sleep except where noted); $AHI\text{-}AHI^{diff}$, mean difference between AHI determined by APAP and AHI determined by PSG; AHI^1 and AHI^2, apneas plus hypopneas per hour of sleep for scorer 1 and scorer 2, respectively; AI, apneas per hour; $AI\text{-}AI^{diff}$, mean difference between AI determined by APAP and AHI determined by PSG; APAP, automatic positive airway pressure; CI, confidence interval; FOT, forced oscillation technique; K_w^1 and K_w^2, weighted kappa for apneas plus hypopneas per hour of sleep computed on second-by-second basis to evaluate agreement between APAP and scorer 1 and scorer 2, respectively; PSG, polysomnography; r, correlation coefficient; SD, standard deviation; SE, standard error.

[a] This study compared AHI as detected by APAP to AHI per time in bed on PSG.

[b] This study compared AHI as detected by APAP to AHI determined from visual analysis of flow from APAP study.

tory portions of recordings [28] from analysis. Chronic obstructive pulmonary disease [22], respiratory failure [70], awake hypoxemia [22], complicating medical illnesses [42], severe arrhythmia [70], or suspicion for complicating sleep disorders [42] were exclusions in several reports.

Most of the diagnostic studies of APAP have been conducted with the Autoset device, with early studies using devices that detected only apneas [19,20] and later studies using devices that detected apneas and hypopneas, with [20,22,28,29] or without [21] differentiating different types of respiratory events. In general, as noted in Table 2, the correlation between respiratory events detected by APAP and those detected by PSG was good, with correlation coefficients of 0.85 to 0.98. The limits of agreement between APAP and PSG were wide, however, with mean differences in AHI detected by APAP compared with PSG ranging from −9.6 to +4.2, with 95% of the true values for the difference ranging from −15.5 to +23.7. Often, APAP overscored respiratory events compared with PSG [19–23], but two groups found that APAP underscored events [28,29]. In part, this may be related to different denominators for the AHI determined from APAP (ie, time in bed) and AHI determined from PSG (ie, total sleep time in usual practice and in most of the noted comparative studies). APAP devices cannot detect sleep. Irregular breathing in wakefulness may be detected as respiratory disturbances and may increase artificially the AHI determined by APAP, whereas long periods of wakefulness with regular breathing or time off the device artificially may decrease the AHI.

The use of thermistors to monitor airflow in PSG also may lead to a lower AHI than the nasal pressure used by this APAP device [23]. Sensitivity and specificity varied with the AHI threshold used to define disease, with increased specificity with increasing severity of OSA. In one multicenter study [29], a high pretest probability added—not unexpectedly—to the diagnostic accuracy of APAP. In two studies, APAP was found to be superior to oximetry alone in diagnosing OSA [21,23]. In a study that used a different prototype APAP device incorporating FOT to monitor upper airway obstruction [70], Steltner et al found that APAP yielded diagnostic results similar to visual analysis of standard PSG performed by two scorers.

In the only unattended (home) study reported to date [42], Fletcher et al studied 63 patients (screened for the presence of symptoms of OSA and the absence of complicating illnesses) using a device that monitors airflow with a built in pneumotachograph (Horizon). No gold standard PSG was performed, although analog flow tracings were examined in an unblinded fashion by the investigators. The RDIs determined by APAP correlated with the RDIs determined by visual analysis (r = 0.85), although the former were systematically lower than the latter, in part because the APAP software did not correct for time off the device. Nine patients could not complete the study because of failure to tolerate the mask, inability to hook up the equipment properly, or failure to return for follow-up. Of the 53 remaining patients with successful studies, 45 were diagnosed with OSA by APAP, 35 of whom ultimately returned for APAP titration studies. The authors reported an average of 1.4 diagnostic studies and 2.4 titration studies to establish the diagnosis and reach satisfactory treatment pressures. Cost analysis showed that in this group of patients, the estimated cost for all in-home APAP studies was less than one fourth the estimated cost for in-laboratory PSG. There are no published data on subsequent compliance with CPAP therapy when the diagnosis of OSA is made using APAP in an unattended setting. Kreiger et al reported a lower subsequent objective compliance with CPAP in a group of patients diagnosed in the ambulatory setting with a MESAM IV ambulatory monitoring device, however, as compared with patients diagnosed by PSG [84].

Taken together, these studies suggest that APAP in diagnostic mode, after examination of the raw data to exclude technical problems [19,23], can diagnose severe OSA effectively, particularly in the presence of high clinical suspicion and in the absence of complicating factors. Given the wide limits of agreement between APAP and conventional PSG, the use of APAP to diagnose less severe OSA is problematic [21,22]. In the presence of a high clinical suspicion for OSA and a negative result on APAP, conventional PSG still plays a role [29]. Although APAP studies are less expensive than conventional PSG studies [21,42] and could potentially save costs in some patients, the overall health care cost-benefit of this approach on a large scale remains to be clarified.

Role of automatic positive airway pressure in therapy for obstructive sleep apnea

Rationale for the use of automatic positive airway pressure in therapy for obstructive sleep apnea

Conventional CPAP, used at an effective pressure in patients with OSA, has been shown to reduce nocturnal respiratory disturbances and improve nocturnal oxygenation [1,4] and sleep architecture [5]. Regarding longer term clinical outcomes, CPAP

improves neurocognitive function, including daytime sleepiness [5–8], cognitive performance [9], driving performance [10,11], and perceived health status [7,8,12]. Treatment with CPAP also may be associated with improvement in mortality [13] and cardiovascular endpoints, such as systemic hypertension [14,15], cardiac arrhythmias [85], nocturnal ischemia [86], and left ventricular function [87]. Finally, patients with OSA who are treated with CPAP have decreased health care use compared with untreated patients [88].

Despite these benefits, conventional CPAP is not accepted by all patients [89,90]. An early study using covert monitoring demonstrated that 35 patients who were followed over 3 months attempted to use CPAP only 66% of the monitored days, with a median use of 4.9 hours [89]. "Inconvenience" and "stuffy nose" were frequently cited problems, but only a complaint of "claustrophobia" distinguished regular users from irregular users; CPAP pressure was similar in the two groups. In a larger long-term study of 1211 patients in Edinburgh followed for a median of 22 months [90], 68% used CPAP at least 2 hours/night, with a median use of 5.7 hours. Reasons for discontinuing CPAP included lack of benefit and discomfort (including noise and feeling of claustrophobia). In multivariate analysis, CPAP pressure was not found to be a determinant of long-term CPAP use. In another study of 193 patients with moderate to severe OSA who were followed an average of 19 months [91], 88% used CPAP every night, with a mean use of 6.5 hours, despite side effects related to the mask in 50%, dry nose or mouth in 65%, sneezing or nasal drip in 35%, and nasal congestion in 25%. There was no correlation between side effects and level of pressure. Only 1% reported lack of benefit from CPAP. It is generally believed, although not formally studied, that having an inadequate pressure, (whether too high, perhaps causing increased side effects, or too low, resulting decreased benefit), can be associated with decreased CPAP compliance [18]. Intensive CPAP education and support by staff has been shown to improve compliance [92,93], whereas lack of technician interaction may decrease compliance [84].

In conventional CPAP therapy, after the diagnosis of OSA has been established, patients typically undergo an attended level I PSG for CPAP titration [72]. After appropriate patient education and mask fitting, while sleep and respiratory parameters are being monitored, CPAP is titrated up manually in a progressive fashion in the laboratory until an effective pressure (P_{eff}) is reached. This single P_{eff} then determines the level of fixed CPAP for long-term home use. The goals of titration and definition of P_{eff} have not been formally established and vary in different studies, however. It has been suggested that the endpoint of titration should be the abolition of apneas, hypopneas, snoring, and airflow limitation [64] with a concomitant decrease in the number of arousals. Higher pressures are needed to eliminate respiratory effort related arousals with airflow limitation [65]. CPAP requirements or the RDI within the same patient may have intranight and internight variability [94], depending on sleep stage [32,95], body position [95–97], consumption of alcohol or other sedatives [98–100], nasal resistance [41,101], inspiratory airflow [102,103], airway humidification [103], and body weight [104].

P_{eff} may, although not universally [27], decrease during the first 8 months of CPAP therapy [105], perhaps secondary to resolution of upper airway edema on therapy [106]. P_{eff} cannot be assumed to be constant. The proportion of patients with OSA with variable CPAP requirements and the magnitude of that variability have not been well studied. Rather than the goal of eliminating all respiratory disturbances and respiratory arousals under all conditions, other clinicians or investigators have used as an endpoint of CPAP titration elimination of most of these abnormalities. Varying targets for an acceptable RDI at P_{eff} (eg, <5/hour or 10/hour or 15/hour) have been used. Methods to monitor airflow impact the measured RDI and the resultant titration results. The art of titration thus encompasses a fine line between efficacy (however defined) and side effects. Titration is time consuming, labor intensive, and expensive and requires highly qualified technologists. Conventional CPAP therapy, delivered at a fixed P_{eff} determined by in-laboratory PSG, is the gold standard to which APAP therapy must be compared.

The rationale for APAP in treatment of OSA is that the variable pressure delivered by APAP in response to dynamic changes in airway resistance might result in improved clinical outcomes compared with conventional CPAP at fixed P_{eff}, with perhaps more favorable airway pressures, fewer side effects, and better compliance. Despite the increased cost of APAP devices, if fewer therapeutic PSGs need to be performed or if overall health outcomes improve, health care costs might be reduced. Alternatively, if there are adverse outcomes (such as if APAP results in increased leaks and arousals with higher pressures, if oxygenation remains suboptimal, or if lack of technician interaction limits compliance) or if the group of patients who are candidates for APAP is small, overall long-term benefits of APAP would be limited.

Table 3
Summary of therapeutic studies of automatic positive airway pressure devices

Author	Device *n* study design	AHI^{diag} Mean (SD or SE)	AHI^{APAP} No. <5, 10, or 15 Mean	Oxygenation: %TST $<90^{APAP}$ mean $Sa0_2^{APAP}$ nadir $Sa0_2^{APAP}$	Sleep: $Arousal\text{-}I^{APAP}$ $Delta^{APAP}$ REM^{APAP}	Symptoms: ESS^{APAP} Other $test^{APAP}$	Pressure: Mean p^{APAP} Peak p^{APAP} $\%TST^{APAP} < p^{Conv}$	$Compl^{APAP}$ $Pref^{APAP}$ Side effects
Berthon-Jones [18]	Prototype	—	<5 in 19/20	—	—	—	6/20 ↑c, 14/20 ↓c	—
	(A,Sn,FL)		—	—	—	—	—	—
	20			—	—		—	—
	Clinical series							
Behbehani	Prototype	49.9	<5 in 3/5,	—	—	—	6.8 ↓c	—
et al [17]	(Sn)		<10 in 5/5	—	—	—	12.2 ↔c	—
	5		4.76	—	—		—	—
	Clinical series							
Llorberes	Autoset	59	—	—	12 ± 7 ↔m	—	—	—
et al [24]	20 (subgroup 9)	(SD = 21)	5.6 ± 6	—	36 ± 14 ↔m	—	—	—
	RCT-CO	(subgroup)		—	27 ± 13 ↔m		—	—
	(Clinical series)							
Lofaso et al [33]	REM+ with MC+	51	<10 in 12/15	39 ± 101m ↓d	13 ± 20 ↓d	—	7.5 ± 2.5 in 12	—
	(only Sn enabled)	(SD = 30)	12 ± 21 ↓d	—	102 ± 149m ↑d	—	9.9 ± 2.8 in 12	—
	15			89 ± 3 ↑d	55 ± 31m ↔d		—	—
	Clinical series							
Meurice	Morphee Plus	43.6	—	—	10.1 ± 2.5 ↔c	5.6 ± 3.7 ↓d, ↔c	—	6.5 ± 1.0
et al [43]	16 (8/8)	(SD = 19.8)	1.7 ± 1.2 ↔c	96.0 ± 0.3	– d ↑, ↔c	MWT: ↑d, ↔c	—	(3wk) ↑c
	RCT-parallel			—	– d ↑	TMT-A: ↓d, ↔c	49.3 ± 14.9	—
						TMT-B: ↔d, ↔c		—
Scharf et al [38]	Horizon	57.3	—	—	9.9 ± 9.5 ↔c	—	—	—
	Autoadjust	(SD = 30.8)	4.4 ± 2.2 ↔c	82.6 ± 3.4 ↑d, ↔c	8.6 ± 7.5 ↑c	—	—	—
	12			—	23.5 ± 6.0 ↔c		63.1 ± 34.2	—
	RCT-CO							
Sharma	Prototype	50.8	—	13.9 ± 25.6 ↓d, ↔m	11.3 ± 0.3 ↓d, ↔m	—	—	—
et al [54]	(Sn)	(SD = 28.8)	6.1 ± 5.3 ↓d, ↔m	—	17.1 ± 9.3 ↑d, ↔m	—	10.1 ± 3.8 ↓m	11/18
	20			79.9 ± 9.7 ↑d, ↓m	25.3 ± 7.4 ↑d, ↔m		—	(61%) ↔m
	RCT-CO							—

Teschler et al [25]	Autoset	60.3	Success 19/20	—	8.9 ± 0.6 ↓m,↔c	—	—	—
	20	(SE = 5.7)	2.8 ± 0.9 ↓m,↔c	—	29.8 ± 3.1↔m,↔c	—	—	—
	RCT-CO			90.4 ± 0.8 ↓m,↔c	21 ± 1.3↔m,↔c		—	—
Series [44]	Morphee Plus	46.8[a]	<15 in 12/12	6.5 ± 6.8 ↓d,↔c	– ↓d,↔c	7 ± 3.7 ↓d	–↓c	6.5 ± 0.9
	36 (12/12/12)	(SD = 22.3)	– ↓d,↔c	—	– ↑d,↔c	MWT: ↑d,↔c	—	(3wk)↔c
	RCT-parallel			—	– ↔c		51 ± 7.9%	—
								—
		61.5[b]	<15 in 11/12	11.8 ± 12.5 ↓d,↔c	– ↓d,↔c	7.9 ± 4.0 ↓d	– ↓c	6.4 ± 1.1
		(SD = 27.7)	– ↓d,↔c	—	– ↑d,↔c	MWT: ↑d,↔c	—	(3wk)↔c
				—	– ↔c		51 ± 7.9%	—
								—
Behbehani	Prototype	55.2	—	—	—	—	8.4 ± SE 3.3 ↓c	—
et al [57]	(Sn)	(SD = 33.7)	5.4 ± 5.4 ↓d,↔c	—	– ↑d,↔c	—	12.8 ± SE 4.3↔c	—
	31			—	– ↑d,↔c		—	—
	RCT-CO							
Ficker et al [35]	REM + Auto	54.1	<10 in 14/16	—	7.4 ± 4.1 ↔c	5.3 ± 3.9↔c	8.1 ± 2.1 mbar ↑c	—
	16	(SD = 24)	4.2 ± 5.1 ↓d,↔c	—	20.7 ± 11.9↔c	VT:↔c	—	6/16
	RCT-CO			—	18.1 ± 5.5↔c		—	(37.5%)↔c
								–↔c
Konermann	Horizon	35.5	—	0.1 ↓d,↔c	2.3 ± 7.4 ↓d, ↓c	—	6.5 ± 1.7 ↓c	5.9 ± 1.6
et al [40]	50 (48 completed)	(SD = 9.6)	2.4 ± SE 1.6 ↓d,↔c	94.7 ± 1.4 ↑d,↔c	27.2 ± 16.5 ↑d, ↑c	—	—	(3–6mo)↔c
	(23:25)			90.3 ± 3.6 ↑d,↔c	20.1 ± 10 ↑d,↔c		—	—
	RCT-parallel							—
Boudewyns	REM + Auto (1.6)	Median: 65.8	—	—	8.4 (5.4,12.8) ↓d,↔c	5 (3,11)↔c	5.2 (4.9,6.8)↔c	6.1(5.2,6.8)
et al [36]	15	(CI:48.6–80.3)	2.1 (0.9,3.2) ↓d,↔c	↔c	– ↑d,↔c	—	—	(2 mo)
	non-RCT			—	– ↑d,↔c		—	—
								–↔c
Gagnadoux	Autoset	69.6	<10 in 21/24	0.2 ± 1 ↓d	—	—	—	—
et al [31]	24	(SD = 29.8)	5.7 ± 4.6	—	39.5 ± 15.9 ↑d	—	—	—
	Clinical series			—	18.8 ± 8.8 ↑d			—
Miyazaki	Virtuoso	68.3	—	—	—	—	—	—
et al [56]	11	(SD = 20.2)	9.6 ± 14.5↔m	—	—	—	9.4 ± 2.0	—
	RCT			89 ± 3.7 ↓m	—		—	—
Randerath	Somnosmart	31.6	—	—	21.2 ± 13.1 ↓d	—	5.4 ± 1.0 mbar ↓c	—
et al [48]	11	(SD = 26.6)	3.4 ± 4.5[c] ↓d	94.4 ± 2.4↔d	12.3 ± 8.8↔d	—	12.3 ± 3.2 mbar	—
	RCT-CO[c,d]			85.6 ± 7.4 ↑d	22 ± 7.7 ↑d		91.7 ± 9.3	—

(continued on next page)

Table 3 (*continued*)

Author	Device *n* study design	AHI^{diag} Mean (SD or SE)	AHI^{APAP} No. <5, 10, or 15 Mean	Oxygenation: $\%TST < 90^{APAP}$ mean $Sa0_2^{APAP}$ nadir $Sa0_2^{APAP}$	Sleep: $Arousal\text{-}I^{APAP}$ $Delta^{APAP}$ REM^{APAP}	Symptoms: ESS^{APAP} Other $test^{APAP}$	Pressure: Mean p^{APAP} Peak p^{APAP} $\%TST^{APAP} < p^{Conv}$	$Compl^{APAP}$ $Pref^{APAP}$ Side effects
			—	—	24.5 ± 10.2 ↓d	—	5.1 ± 0.7 mbar ↓c	—
			5 ± 7.2[d] ↓d	93.7 ± 2.9↔d	12.3 ± 7.6↔d	—	11.8 ± 2.1 mbar	—
				86.7 ± 6.9 ↑d	23 ± 7.9 ↑d		90.4 ± 6.3	—
d'Ortho et al [37]	REM + Auto(2.1)	57.8	< 10 in 16/25	8.8 ± 20.5 m ↓d,↔c	15.5 ± 8.9 ↓d,↔c	9.3 ± 4.8 ↓d,↔c	8.8 ± 1.8 ↓c	4.1 ± 1.8
	25	(SD = 5.8)	10.6 ± 9.3 ↓d,↔c	95.6 ± 1.6 ↑d,↔c	87 ± 40 m ↑d,↔c	SQ: 32 ± 11↔c	—	(2 mo)↔c
	RCT-CO			85.2 ± 9.0 ↑d,↔c	21 ± 8 m ↑d,↔c		—	15/25 (60%)
								– ↔c
Ficker et al [49]	Somnosmart	48.0	< 10 in 17/18	—	6.6 ± 2.1↔c	5.6 ± 1.8↔c	0.84 ± 0.26 kPa ↓c	—
	18	(28.1)	3.4 ± 3.4↔c	—	19.3 ± 6.6↔c	—	—	8/18
	RCT-CO			—	21.7 ± 4.9↔c		—	(44%)↔c
								– ↔c
Fletcher et al [42]	Horizon	34.1	—	—	—	10.5 ± 0.9 ↓d	9.4 ± 0.6	—
	30	(SD = 4)	8.6 ± 0.8 ↓d	—	—	MSLT: 5.7 ± 0.8 ↑d	12.9 ± 0.6	—
	Clinical series			—	—		—	—
Hudgel [55]	Virtuoso	30	—	—	—	9 ± 1 ↓d,↔c	6.4 ± 0.4 ↓c	6 ± 0.3
	60(39 completed)	(SE = 4)	—	—	—	—	—	(12 wk) ↑c
	RCT-CO			—	—		—	—
								—
Randerath	Somnosmart	18.2	—	—	22.2 ± 9.7↔d	—	5.6 + /12.1 mbar ↓c	—
et al [50]	10	(SD = 13.3)	2.5 ± 1.9[e] ↓d	—	20.2 ± 10.4 ↑d	—	13.9 ± 3.2 mbar	—
	RCT-CO[e,f]			—	19.6 ± 2.3↔d		73.6 ± 31.4	—
			—	—	22.9 ± 8.1↔d	—	7.3 ± 1.6 mbar ↓c	—
			1.8 ± 0.7[f] ↓d	—	22.3 ± 9.3↔d	—	13.4 ± 3.5	—
				—	18.3 ± 6.4↔d		48.6 ± 45.1	—
Teschler	Autoset	52.9	—	—	7.7 ± 2.4 ↓d	—	Median 7.6 ± 0.4 ↓c	6.3 ± 0.4
et al [30]	10	(SD = 8.1)	3.5 ± 1.7 ↓d	—	24.6 ± 2.8 ↑d	—	– ↑c	(2 mo)↔c
	RCT-CO			—	25.9 ± 1.4 ↑d			—
								—
Randerath	Somnosmart	32.2	—	—	16.5 ± 9.4 ↓d,↔c	—	5.7 ± 2.1 mbar ↓c	—
et al [52]	25	(SD = 18.1)	5.5 ± 3.8 ↓d,↔c	—	21.6 ± 10.9 ↑d,↔c	SQ:6.8 ± 2.6 ↑c	12.6 ± 4.6	—
	RCT-CO			87.0 ± 4.2 ↑d	20.3 ± 7.3 ↑d,↔c			–↔c

Randerath et al [51]	Somnosmart 52 (47 completed) RCT-CO	35.1 (SD = 26)	— 5.3 ± 5.6 ↓d	— — 92 ± 5 ↔d	10.3 ± 6.4 ↓d 18 ± 12 ↔d 57 ± 19 ↑d	− 7.8 ± 4.7 ↓d —	6.6 ± 2.4 c↓ 14.3 ± 4 ↑c 81.5 ± 21	5.3 ± 1.6 (6 wk)↔c 35/47 (75%) ↑c −↔c
Fuchs et al [53]	Somnosmart 30 Clinical series	47.7 (SD = 21.9)	— 4.7 ± 4.7	— — —	14.5 ± 6.6 — —	— — —	— — —	— — —
Marrone et al [32]	Autoset Clinical 15 Clinical series	64.8 (SD = 25.4)	— 1.8 ± 1.5	— — 91.6 ± 3.5	11.5 ± 6.5 7 ± 8.4%TIB 14.2 ± 8%TIB	— —	— —	— — —

Data are presented as means ± standard deviation or standard error, as appropriate to each study, unless noted as median and 95% confidence interval.

Abbreviations: A, apnea; AHI^{APAP}, number of apneas plus hypopneas per hour of sleep on APAP; AHI^{diag}, number of apneas plus hypopneas per hour of sleep on baseline diagnostic night; APAP, automatic positive airway pressure; Arousal-I^{APAP}, number of arousals per hour of sleep on APAP; CI, 95% confidence interval; CO, cross-over; $Compl^{APAP}$, compliance with APAP in h/day of use over defined follow-up period; CPAP, continuous positive airway pressure; $Delta^{APAP}$, amount of delta (slow-wave, stage 3 + 4) sleep on APAP [in % total sleep time unless stated as %time in bed (%TIB) or minutes(m)]; ESS^{APAP}, Epworth Sleepiness Scale on APAP; FL, flow limitation; mean $Sa0_2^{APAP}$, mean nocturnal arterial oxygen saturation on APAP (%); Mean p^{APAP}, mean positive airway pressure level on APAP (cm/H_20 unless noted as mbar or kPa); MSLT, mean sleep latency test (minutes); MWT, maintenance of wakefulness test (minutes); nadir $Sa0_2^{APAP}$, nadir arterial oxygen saturation on APAP (%); Other test ^{APAP}, semiquantitative or objective test of symptoms (sleepiness or performance) on APAP; Peak p^{APAP}, peak positive airway pressure level on APAP (cm/H_20 unless noted as mbar or kPa); Pref ^{APAP}, proportion (percentage) preferring APAP to CPAP; RCT, randomized controlled trial; SD, standard deviation; SE, standard error; Sn, snoring; SQ, sleep questionnaire (specific to study and not standardized); $\%TST < 90^{APAP}$, percent total sleep time with arterial oxygen saturation less than 90% on APAP (in %, unless stated as minutes (m)); $\%TST^{APAP} < p^{Conv}$, percent total sleep time on APAP at positive pressure less than conventional fixed CPAP as determined by manual titration; TMT-A, trail-making test A; TMT-B, trail-making test B; VT, vigilance test.

↔d, ↓d, ↑d: no change from, lower than ($P < 0.05$), or higher than ($P < 0.05$) diagnostic night, respectively.

↔m, ↓m, ↑m: no change from, lower than ($P < 0.05$), or higher than ($P < 0.05$) manual CPAP-titration night, respectively.

↔c, ↓c, ↑c: no change compared with, lower than ($P < 0.05$), or higher than ($P < 0.05$) with conventional fixed CPAP as determined by manual titration.

[a] APAP device reference pressure set at effective pressure determined by manual titration.

[b] APAP device reference pressure set at effective pressure estimated by a formula.

[c] APAP device pressure range set at widest possible range (4–15.5 mbar).

[d] APAP device pressure range set with maximum acceptable pressure calculated from formula based on effective pressure determined by manual titration and lower limit set at 4 mbar.

[e] APAP device pressure range set at widest possible range (4–15.5 mbar).

[f] APAP device pressure range set with minimum acceptable pressure calculated from formula based on effective pressure determined by manual titration and upper limit set at 15.5 mbar.

Studies that evaluate automatic positive airway pressure for the therapy for obstructive sleep apnea

Multiple studies that evaluated APAP devices for the therapy of OSA have been published in the English literature (Table 3). Most have been single-night studies, although some have been performed for 3 weeks to 6 months to assess certain outcomes [30,37,40,43,44,51,55]. APAP usually has been studied in an attended setting, in which a technician could assess for leaks or other problems and intervene as necessary. Study designs, APAP devices, definitions, monitoring techniques, and outcome measures have varied across studies. Most of the patients studied have had moderately severe or severe OSA, as indicated by the mean baseline AHI for each study typically being in the 30/hour to 50/hour range, with a large standard deviation (see Table 3). Only one study included a small group of four patients with upper airway resistance syndrome [55]. All patients were diagnosed by PSG, except in one study in which patients were diagnosed at home with APAP and subsequently treated at home with APAP [42]. Many patients were exposed to CPAP before treatment with APAP. Most studies also listed exclusions [18,25,30,35,37,38,40,42,44,47,49,52,54,55,57]. Patients with nonobstructive sleep-related breathing disorders (eg, hypoventilation syndromes, Cheyne-Stokes respiration, central sleep apnea) or complicating medical illnesses (eg, congestive heart failure, chronic obstructive pulmonary disease, respiratory failure, cerebrovascular disease) were frequently excluded. Patients with other sleep disorders (eg, narcolepsy, periodic limb movement disorder, restless legs syndrome), previous velopharyngeal surgery, or need for increased CPAP level on CPAP titration night (eg, >14–15 cm H_20) also were excluded in some studies.

Indexes of upper airway obstruction

As noted in Table 3, the mean AHI was significantly reduced with APAP as compared with the baseline diagnostic night in every study to date. The AHI was not always reduced to normal in all patients, however. In some patients, therapy with APAP was not possible or was problematic because of inability of the device to detect evidence of upper airway obstruction or because of significant leaks. Lofaso et al, using a device that exclusively detects snoring, reported that APAP was ineffective in 3 of 15 patients, one with non-heavy snoring and two with mouth breathing/leak [47]. The device increased its pressure in response to snoring in only 84% $\pm$ 6% of snoring events. In that study and in another report by Miyazaki et al using a similar device [56], esophageal pressure swings were reduced with APAP, which indicated improved upper airway obstruction. Miyazaki et al found that the improvement in esophageal pressure was less than that with manually adjusted CPAP, however. Teschler et al, using a different device that detects apnea, snoring, and flow limitation, also noted that high leak precluded single-night APAP use in 1 of 21 patients [25]. There is also one case report of a patient with moderately severe OSA (AHI: 35.3/hour) who was stable on CPAP 8 cm H_20 who subsequently developed central apneas and arousals when treated with APAP [107]. In general, in the studies that compared APAP to conventional fixed CPAP, the improvement in AHI was similar in the two groups, with no advantage of one mode of therapy over the other.

Nocturnal oxygenation

In all of the studies in which the effect of APAP on nocturnal oxygenation was examined, some or all measures of oxygenation (eg, time with $Sa0_2$ < 90%, mean $Sa0_2$, and mean nadir $Sa0_2$) improved compared with the baseline diagnostic night (see Table 3). Oxygenation did not necessarily normalize in all patients, however. The improvement in oxygenation with APAP was generally similar to the improvement with manually titrated or conventional fixed CPAP. In three studies that used different devices, however, the mean nadir $Sa0_2$ was less with APAP than with manually titrated CPAP [25,54,56].

Sleep architecture

The varying pressure supplied by APAP might be expected to result in disturbed sleep; however, most studies have shown improvement in sleep architecture with APAP compared with the baseline diagnostic night (see Table 3). The amount of sleep fragmentation improved with APAP, as indicated by a decrease in the number of arousals per hour of sleep (arousal index) in almost all studies. Similarly, most studies showed an increase in delta or slow wave (stage 3 + 4 non-rapid eye movement[REM]) sleep on APAP, and some studies showed an increase in REM sleep. Sleep architecture was usually similar with APAP and with manually titrated or conventional fixed CPAP. Teschler et al [25], however, reported a lower arousal index with APAP compared with manually titrated CPAP but not with conventional fixed CPAP. Scharf et al [38] and Konermann

et al [40], each using a device that monitors snoring and respiratory events, reported more delta sleep with APAP compared with conventional fixed CPAP. Improvements in sleep architecture, along with improvements in AHI and oxygenation, have been shown to be maintained over 6 weeks [51] and up to 6 months [40]. A more detailed analysis of whether changes in pressure with APAP could induce arousal was performed by Fuchs et al [53]. Thirty patients with OSA were studied with PSG during APAP therapy using a device controlled by impedance. As in other studies, the overall number of arousals during sleep improved with APAP compared with baseline. During periods of sleep time in which there was a pressure variation by more than 0.5 mbar, however, there was an increase in arousals as compared with periods of time in which pressure was constant. There also was considerable interindividual variability among patients, with some having relatively few pressure-dependent arousals and others having up to 61% of arousals being classified as pressure dependent.

Obstructive sleep apnea symptoms

Changes in nocturnal and daytime symptoms of OSA have been assessed with subjective and objective tests (see Table 3). Randerath et al [52] used a sleep questionnaire to evaluate the quality of sleep in 25 patients randomly assigned to conventional fixed CPAP or impedance-controlled APAP in a single-blind cross-over comparison. The 16 patients who completed the questionnaire rated the quality of their sleep higher with APAP than with CPAP. In contrast, d'Ortho et al [37], using a randomized cross-over design with 2-month treatment periods to study a different APAP device that senses snoring and respiratory events, found similar OSA symptom scores on their sleep questionnaire in the APAP and conventional fixed CPAP groups. Daytime sleepiness has been assessed most commonly with the Epworth Sleepiness Scale (ESS) [108], which ranges from 0 (least sleepy) to 24 (most sleepy), depending on the patient's perception of level of sleepiness in eight situations. In general, ESS has decreased (improved) with APAP therapy, similar to conventional fixed CPAP. Hudgel and Fung reported similar improvements in ESS in a subgroup of four patients with upper airway resistance syndrome treated with APAP or conventional fixed CPAP over a 12-week period [55]. In the only study that did not note improvement in ESS with APAP, the baseline ESS was already in the normal range [36]. Multiple Sleep Latency Test [109,110] and Maintenance of Wakefulness Test [111] results have confirmed objective improvements in the latency to sleep in the daytime in patients treated with APAP (two studies used devices that sense respiratory events and one used a device that senses snoring and respiratory events), again similar to conventional fixed CPAP [42–44]. Meurice et al [43] used two trailmaking tests (TMT-A and TMT-B) to assess alertness and concentration after 3 weeks of APAP or 3 weeks of conventional fixed CPAP. TMT-A score improved to a similar degree with APAP and CPAP, whereas TMT-B did not change. Finally, Ficker et al [35], using a device that senses snoring and respiratory events, reported that a standardized vigilance test normalized in all patients after a single night of treatment with APAP or conventional fixed CPAP.

Cardiovascular outcomes

There are no published reports to date on the acute or chronic effects of APAP on blood pressure or other cardiovascular outcomes.

Positive airway pressure levels

Almost all studies show a decrease in mean treatment pressure with APAP compared with conventional fixed CPAP (see Table 3). In some studies, more than 50% of total sleep time on APAP was spent at a pressure level less than P_{eff} determined by conventional manual CPAP titration (P_{eff}^{conv}) [45,48, 51]. The average mean APAP pressure was lower than P_{eff}^{conv} by 0.9 cm H_20 [37] to 3.1 cm H_20 [57]; however, this was not true for all patients in each study. The mean peak pressure delivered by APAP was often higher than P_{eff}^{conv}, however (see Table 3). In the original report of APAP therapy using a device that responded to apnea, snoring, and flow limitation [18], expiratory leak through the lips confused the auto-setting algorithm in 6 of 20 patients, which led to increased pressure in these patients. In another report, Teschler et al noted that high leak caused unnecessary increases in pressure in 3 of 21 patients [25]. Randerath found that whereas the average of mean APAP pressure was lower than P_{eff}^{conv} by 2.1 cm H_20, the range of differences was 6 cm H_20 lower to 4 cm H_20 higher than P_{eff}^{conv} [51]. The magnitude of the difference between APAP mean pressure and P_{eff}^{conv} has been shown to depend at least partially on the algorithm used to select P_{eff}^{conv} and the algorithm controlling the APAP device. Sleep stage and body position are also important in some patients. Mean positive airway pressure levels with APAP have been shown to decrease during delta sleep compared with stage I-II non-REM sleep and REM sleep [32,35, 43,44] and in the lateral position compared with the

supine position [44]. Many patients with body position–dependent OSA also may have sleep stage–dependent OSA [46]. In a randomized parallel group study [46], the night-to-night variability of pressure levels with APAP was higher in body position– and sleep stage–dependent patients than independent patients. Six patients with body position and sleep stage dependence treated with 3 weeks of APAP had less subjective and objective sleepiness than a similar group of six patients treated with CPAP, which suggests that there may be a treatment advantage for APAP over CPAP in this group.

Side effects

Side effects with APAP as compared with conventional fixed CPAP have been examined, either in the form of questionnaires [35–37,49,51,52]or surrogates, such as use of humidifiers to correct nasal symptoms [44] (see Table 3). Patients were more aware of pressure variations when treated with APAP than CPAP in one report [51], felt the pressure was lower on APAP than CPAP in another report [35], and had a tendency to report breathing against the machine more with APAP than CPAP in yet another report [49], but no other differences have been noted.

Compliance

Compliance with APAP therapy has been examined over 3-week to 3-to- 6-month time periods (see Table 3). Some studies [40,43,55], but not all [30,37,44,51], have found that some measures of compliance improved with APAP compared with conventional fixed CPAP. Meurice et al reported 7.1 $\pm$ 1 hour nightly use in the APAP group compared with 5.1 $\pm$ 1.1 hours in a parallel CPAP group [43]. In another randomized parallel group study, Konermann et al reported similar compliance between APAP and CPAP in terms of hours per night but increased compliance with APAP compared with CPAP in terms of nights per week (6.5 $\pm$ 0.4 and 5.7 $\pm$ 0.7, respectively) [40]. Hudgel and Fung, in a randomized cross-over study [55], found increased nightly use of APAP compared with CPAP (6 $\pm$ 0.3 hours and 5.5 $\pm$ 0.3 hours, respectively) but no difference in nights of use, cumulative hours of use, or patterns of use. In a subgroup of four patients with upper airway resistance syndrome, cumulative hours of use and nights of use were higher with APAP than CPAP.

Preference

Several single night and longer-term studies have evaluated whether patients prefer APAP or conventional fixed CPAP (see Table 3). In general, patient preferences were not different between the two modalities, with the exception of one single blind study in which 35 of 47 patients (75%) preferred APAP.

Health care costs

In a strategy that used APAP for in-home diagnosis and therapy [42], Fletcher et al reported cost savings with APAP compared with conventional therapy. No other systematic comparisons have been published.

In summary, these studies suggest that APAP can be an effective therapy for OSA in patients without complicating sleep or medical diagnoses. APAP therapy can result in a reduced AHI, although devices that predominantly detect snoring as a measure of upper airway obstruction may be less effective. Not all patients can achieve equivalent results. Sleep and oxygenation parameters improve, although there may be a somewhat lower $Sa0_2$ nadir with APAP than CPAP. OSA symptoms also improve. Mean airway pressures tend to be lower with APAP, without significant change in side effect profile. Compliance and preference tend to be similar or somewhat better with APAP. Patients with sleep-stage and body position-dependent OSA may gain the most from APAP therapy, but further work is needed to define the most appropriate patients for this modality. The effects of APAP on cardiovascular outcomes and health cares costs and the differences between devices also require further study.

Role of automatic positive airway pressure in the titration of continuous positive airway pressure for obstructive sleep apnea

Rationale for use of automatic positive airway pressure to determine an effective continuous positive airway pressure in patients with obstructive sleep apnea

Traditionally, in patients with OSA who are treated with conventional fixed CPAP, a full-night attended PSG for manual CPAP titration to determine P_{eff} (as described earlier) follows the initial diagnostic night, which requires two separate studies for diagnosis and therapy. "Split-night" PSG, with the first half of the night to establish the diagnosis and the second half of the night to titrate CPAP, is an

accepted alternative used by many centers in patients who meet certain criteria [72,73]. Although this technique has demonstrated efficacy and saves the cost of one PSG, not all patients ultimately found to have OSA meet the diagnostic criteria early enough in the night to initiate a CPAP titration on the same night. Even in patients who do undergo a CPAP trial in a split-night format, not all patients are titrated successfully by the end of the night. A second study may be required to titrate CPAP.

Rather than using full-night or split-night in-laboratory PSG, some investigators have used prediction formulae [112], patient and bedpartner reports [113], and limited unattended or attended respiratory ± sleep portable monitoring [81] to help determine P_{eff}. Home titration to determine P_{eff} in patients with established OSA using a four channel portable device in the home (EdenTech, Eden Prairie, MN) guided by patient or bedpartner interview [113] was found to be feasible and lead to improvement in AHI on follow-up PSG at machine-derived P_{eff} (P_{eff}^{device}). In a study of 17 patients with OSA attended by a registered nurse or polysomnographic technician in the home using the same device for titration [114], AHI was reduced on the titration night at a lower cost than conventional PSG. Compliance on CPAP determined by P_{eff}^{device} was similar to historical controls at 18 and 13 months follow-up in both studies, respectively. Using a different device that records cardiorespiratory data, airway pressure, and sleep (VITPAP, Vitalog HMS-5000, Vitalog Monitoring Inc., Redwood City, CA), unattended machine-controlled titration was performed in 21 unselected patients with OSA [115]. In the 19 patients who completed the machine titration, the P_{eff} was determined after the recording was reviewed visually and scored by the investigators. This P_{eff}^{device} was highly correlated ($r = 0.90$) with P_{eff} determined by conventional manual CPAP titration (P_{eff}^{conv}), with a mean difference of 0.21 ± 1.08 cm H_2O. Cardiorespiratory complications occurred in six patients, however, including mild discomfort that required a resetting of CPAP pressure, central apnea with oxygen desaturation of more than 85%, and ventricular ectopy, with termination of the procedure required in two patients.

Subsequently, unattended home CPAP titration was studied in 30 patients with OSA using a portable respiratory and sleep monitoring system with modem technology that allowed transfer of data from home to the laboratory (NightWatch, Healthdyne) [116] and compared with in-laboratory titration in a parallel group of 30 patients. In this study, patients were excluded if they had severe cardiopulmonary or renal disease or important arrhythmia or if they required oxygen or nocturnal ventilation, and all patients in both groups met with a respiratory therapist for a pretitration education session. AHI and sleep stage distribution at follow-up PSG at 6 to 8 weeks and objective compliance were similar in the group using fixed CPAP at P_{eff}^{device} and the group using fixed CPAP at P_{eff}^{conv}.

Instead of using APAP with the goal of long-term treatment, there have been attempts to use APAP in the short term (one or several nights), similar to other portable monitoring systems, to determine P_{eff} after an initial diagnostic PSG. This P_{eff}^{APAP} then could be administered long term at a fixed level at home using a conventional CPAP device. The P_{eff}^{conv} is the gold standard to which the P_{eff}^{APAP} must be compared. Titration with APAP can be done during an attended study, in which the advantage over traditional CPAP titration might be freeing up technician time. It also could be done in the unattended home setting over 1 or more days as a way of determining a more effective level of CPAP for the long term, given that sleep might be expected to be more normal at home than in the laboratory. Turnaround time between diagnosis and therapy potentially could be improved. By eliminating the need for a second study, cost savings also could be realized, especially compared with a traditional 2-night approach to diagnosis and therapy. Because patient-technician interaction is limited with the use of home titration with APAP, however, if the patient does not have a successful autotitration, long-term adherence and compliance might be adversely affected.

Studies that evaluated automatic positive airway pressure for determining an effective continuous positive airway pressure in patients with obstructive sleep apnea

Studies that evaluated APAP in determining P_{eff} are summarized in Table 4. Patients included in these studies were previously diagnosed with OSA by laboratory-based or portable PSG and generally had a baseline mean AHI in the severe range (Table 4). Usually patients were not previously treated with CPAP [24,26,30,31,34,45,68], but this was not always stated [25,39]. As in studies that evaluated the role of APAP for diagnosis and therapy, patients with complicating medical or sleep disorders were often [25,26,30,34], but not always [24,31,39,45,68], excluded. Studies often were performed in an attended setting so that the technician (or another health professional in the case of par-

Table 4
Summary of titration studies using automatic positive airway pressure devices to determine an effective continuous positive airway pressure level for treatment of obstructive sleep apnea

Author	Device *n* Study design Setting of APAP titration	AHI^{diag} Mean (SD or SE)	P_{eff}^{conv} Mean ± SD or SE	P_{eff}^{APAP} ([a]) Mean ± SD or SE	$AHI\text{-}P_{eff}^{APAP}$ Mean ± SD or SE
Llorberes et al [24]	Autoset 20 RCT-CO Partially attended—hospital	53.3 (SD = 19)	10.1 ± 1.8	10.3 ± 1.5 (A1)↔m 11.5 ± 2.9 (B4)↔m 10.7 ± 2.7 (B4)↔m	—
Teschler et al [25]	Autoset 20 RCT-CO Attended	60.3 (SE = 5.7)	8.6 ± 0.4	9.9 ± 0.4 (A4) ↑m	2.5 ± 0.7
Stradling et al [39]	Horizon (H definition changed) 112 (52/61) RCT-Parallel Unattended—laboratory	—	8.7 ± 2.5	8.2 ± 2.1(A3)↔m	—
Teschler et al [26]	Autoset 20 RCT-CO Attended (at 3 mo and 8 mo follow-up of prior study group from Teschler [25]	60.3 (SE = 5.7)	11.0 ± 0.5 (at 3 mo) 10.4 ± 0.4 (at 8 mo)	10.6 ± 0.4 (A4)↔m (at 3 mo) 9.7 ± 0.5 (A4)↔m (at 8 mo)	4.3 ± 0.6 # (at 3 mo) 3.6 ± 0.5 # (at 8 mo)
Berkani et al [34]	REM + auto (Only Sn enabled) 10 Clinical series Unattended—hospital	55 (SD = 16)	—	10.5 ± 2.2 (B1)	7 ± 5 #
Badia et al [68]	Prototype (FOT) 28 Simultaneous recording Attended—laboratory	63.7 ± 3.1 (nap study, *n* = 14) 67.3 ± 2.89 (overnight study, *n* = 14)	10.6 ± 0.6 9.9 ± 0.7	11.1 ± 0.6 (A2)↔m 9.9 ± 0.6 (A2)↔m	— —

Gagnadoux et al [31]	Autoset 24 Clinical series Attended—laboratory	69.6 (SD = 29.8)	—	11.2 ± 1.6 (A4)	4.1 ± 3.2 # at 3 mo < 10 in 17/18
Series [45]	MorpheePlus 42 Clinical series Unattended—home (1- or 2-wk titration)	43.6 (SD = 19.8)	—	10 ± 1.7 (B6) (1 wk) 9.7 ± 1.1 (B6) (2 wk)	4.8 ± 6 at 2 wk < 10 in 38/40
Teschler et al [30]	Autoset 10 RCT-CO Attended—laboratory (3 d titration at d 0,60,120) Unattended—home (12 d titration over 2 mo)	52.9 (SE = 8.1)	9.4 ± 0.6	10.3 ± 0.4 (A3) ↑m (attended) 10.1 ± 0.5 (A3) ↑m (unattended)	—

Data are presented as means ± standard deviation or standard error, as appropriate for each study.

Abbreviations: AHI-P_{eff}^{APAP}, apneas plus hyponeas per hour of sleep on fixed CPAP at effective pressure as determined by APAP titration (AHI determined by conventional PSG unless # to indicate portable home study); APAP, automatic positive airway pressure; FOT, forced oscillation technique; H, hypopnea; P_{eff}^{APAP}, effective pressure (cm H_20) as determined by APAP titration; P_{eff}^{conv}, effective pressure (cm H_20) as determined by conventional manual titration; SD, standard deviation; SE, standard error; Sn, snoring.

↔m, ↓m, ↑m: no change from, lower than ($P < 0.05$), or higher than ($P < 0.05$) P_{eff} from manual CPAP-titration night, respectively.

[a] Method of determination of P_{eff}^{APAP}: A, review of raw data to exclude periods of leak or poor recording prior to determining P_{eff}; B, no mention of review of raw data prior to determining P_{eff}; 1, highest pressure; 2, pressure that eliminates upper airway obstruction events; 3, pressure that eliminates most upper airway obstruction events; 4, P95: pressure that is exceeded only 5% of the time: 5, P90: pressure that is exceeded only 10% of the time; 6, pressure determined by percentage of time spent below reference pressure (in turn determined by a formula incorporating body mass index, neck circumference, and AHI), constrained by a range + 3cm H_20/ – 4cm H_20.

tially attended studies) could monitor for leaks or other technical problems (see Table 4). Only one study, a clinical series with historical controls [45], was performed in an unattended home setting in CPAP-naïve patients. The amount of time for APAP titration varied from a single night in most studies, to 1 or 2 weeks [45], to an average of 12 nights over 2 months [30].

Studies differed in device used, study design, setting, and outcomes assessed (see Table 4). The primary outcome was usually P_{eff}^{APAP}, which was either compared directly with P_{eff}^{conv} or assessed for effectiveness by follow-up conventional fixed CPAP therapy at P_{eff}^{APAP}. Methods of determining P_{eff}^{APAP} varied across studies (see Table 4). The raw data usually were excluded to eliminate periods of high leak or poor recording. In some reports, however, data review was not specifically mentioned or was not performed. Subsequently, P_{eff}^{APAP} was determined by analysis of pressure during the APAP titration night(s) and was variably defined as the highest pressure of the recording, the pressure that eliminated all or most upper airway obstruction events, the pressure that was exceeded only 5% or 10% of the time (P_{95} or P_{90}, respectively), or the percent of time spent below a reference pressure as determined by a formula (see Table 4). Methods to determine P_{eff}^{conv} varied, and the goals of the conventional manual titration were not necessarily the same as the goals of the APAP titration [26].

As outlined in Table 4, most patients had a successful APAP titration, and P_{eff}^{APAP} and P_{eff}^{conv} were similar in most studies. P_{eff}^{APAP} also has been shown to be stable over 8 months of follow-up [26]. Teschler et al, using a device that detects snoring, apnea, hypopnea, and flow limitation, initially noted that P_{eff}^{APAP} was higher than P_{eff}^{conv} by an average of 1.3 ± 0.3 cm H_20 [25], despite excluding periods of leak. This difference subsequently decreased in a follow-up study of this same group of patients after changing the goals of the manual titration to be more similar to those used by the device [26].

Not all patients were able to have P_{eff}^{APAP} determined with APAP titration. Teschler reported that high leak prevented autotitration in one patient and caused unnecessary increases in pressure in 3 of 21 patients, although for most of the night, leak was low (< 0.4 L/second) [25]. During the APAP titration night, the technician reseated the mask an average of 1.9 ± 0.4 occasions per patient per night, a frequency similar to the manual CPAP titration night. Gagnadoux et al also reported leaks of more than 0.4 L/second in $3.1\% \pm 4.8\%$ of titration time (range 0% to 15%), with the technician repositioning the mask an average of 0.93 ± 0.46 times per night [31]. Periods of continuous leak occurred in 7 of 14 patients and ranged from 4% to 70% of total sleep time during a manual titration when impedance was simultaneously monitored with FOT and subsequently interpreted in a blinded fashion by the investigators [68]. As in the previous studies, these periods of leak were excluded before determining P_{eff}^{APAP}.

Llorbes et al found that P_{eff}^{APAP} determined by review of raw data to exclude mask leaks and atypical pressure changes followed by visual inspection to determine the highest level of pressure was similar to P_{eff}^{APAP} determined by P_{90} or P_{95}. Berkani et al reported that APAP titration, using a device adjusted to detect only snoring, was unsuccessful in two of ten patients, one of whom had a laryngectomy for laryngeal cancer and one of whom underwent uvulopalatopharyngoplasty [34]. These two patients ultimately had successful titration when the APAP pressure range was less constrained. Increased mouth leak, even at low CPAP pressures, previously has been reported in patients who have undergone uvulopalatopharyngoplasty [117]. Series reported that 2 of 42 patients were not successful with home APAP titration using a device that detects apneas and hypopneas and operates within a set range of a reference pressure, 1 because of central apnea and 1 because of machine malfunction [45].

Gagnadoux et al, using a device that detects snoring, apnea, hypopnea, and flow limitation, found that APAP titration was unsuccessful (defined as an AHI > 10/hours on subsequent PSG at fixed P_{eff}^{APAP}) in 3 of 24 patients, perhaps because of severity of OSA [31]. All 3 patients had a high AHI at baseline that ranged from 95/hour to 123/hour. Finally, the variability of APAP pressure levels was studied in relation to sleep architecture in 15 patients on home therapy with APAP [32]. The highest pressures generally occurred during periods of drowsiness or fragmented non-REM sleep, which suggested that if APAP had been used for titration at home in patients with poor sleep quality, P_{eff}^{APAP} could have been overestimated.

After successful determination of P_{eff}^{APAP}, patients have been treated with CPAP at fixed P_{eff}^{APAP} and other outcomes have been assessed. Mean AHI on repeat PSG or limited home monitoring with CPAP at fixed P_{eff}^{APAP} improved compared with the baseline diagnostic night (see Table 4). Improvements in sleep architecture [34,45], including a decrease in arousal index and an increase in delta sleep and REM sleep and improvements in nocturnal oxygenation [34,45], also have been reported. ESS also improved compared with baseline [31,45] and

was similar for patients treated with CPAP at fixed P_{eff}^{conv} [39].

Compliance with CPAP at fixed P_{eff}^{APAP} has been evaluated in several studies. Subjective compliance was assessed 6 weeks after APAP titration in 52 patients and compared with a parallel group of 61 patients after manual CPAP titration. The proportion of successful patients who were established on CPAP in the APAP group was similar to the manual group (73% and 64%, respectively; 25% and 23%, respectively, were undecided about CPAP therapy). Fewer patients in the APAP group (2%) had decided definitely against CPAP therapy compared with the manual group, however (13%). In two other studies, objective 3-month compliance by hour meter was 4.9 ± 0.3 hours/night in 20 patients [25] and 5.25 ± 1.82 hours/night in 18 of 22 patients [31], both similar to historical controls. Finally, in a study in which P_{eff}^{APAP} was determined by home titration, 86% of patients initially accepted CPAP for home therapy, and objective compliance was 6.1 ± 1.7 hours/night in 36 of the 40 patients who were successful with APAP titration [45].

Minimal data are available on the impact of APAP titration on health care resources. In using APAP for titration in the attended setting, Teschler et al and Gagnadoux et al each reported an average of one to two technician interactions per patient per night—fewer than would be expected on a manual titration night, thus potentially reducing technician workload [25,31]. Berkani et al, using APAP in an unattended setting, estimated that the cost of the 12 ambulatory studies required to determine P_{eff}^{APAP} in 10 patients was less than that of conventional manual titration [34].

Overall, these studies suggested that APAP can be a useful modality in uncomplicated patients to determine P_{eff} for long-term conventional CPAP therapy. The best device and best method for determining P_{eff} are not known. Regardless of device, final P_{eff}^{APAP} is generally similar to P_{eff}^{conv}, but some patients do not have an effective titration. Patients who do not snore may not have an adequate APAP titration using a device based on snoring detection. Supervised APAP titration may be required because leaks and the need for intervention occur. Unsupervised titration can be

Table 5
American Academy of Sleep Medicine practice parameters (2002) for the use of autotitrating positive airway pressure devices in adult patients with obstructive sleep apnea

	Recommendation	Level of recommendation
1	A diagnosis of OSA must be established by an acceptable method.	Standard
2	Patients with the following conditions are not candidates for APAP titration and APAP treatment: congestive heart failure significant lung disease (eg, chronic obstructive pulmonary disease), daytime hypoxemia, or respiratory failure prominent nocturnal desaturation other than that from OSA (eg, obesity-hypoventilation syndrome). Patients who do not snore should not be titrated with an APAP device that relies on vibration or sound in the device's algorithm.	Standard
3	APAP devices are not currently recommended for split-night studies.	Standard
4	Certain APAP devices may be used during attended titration to identify, by polysomnography, a single pressure for use with standard CPAP for treatment of OSA.	Guideline
5	Once an initial successful attended CPAP or APAP titration has been determined by polysomnography, certain APAP devices may be used in the self-adjusting mode for unattended treatment of OSA.	Guideline
6	Use of unattended APAP to either initially determine pressures for fixed CPAP or provide for self-adjusting APAP treatment in CPAP naïve patients is not currently established.	Option
7	Patients being treated with fixed CPAP on the basis of APAP titration or being treated with APAP must be followed to determine treatment efficacy and safety.	Standard
8	A reevaluation and, if necessary, a standard attended CPAP titration should be performed if symptoms do not resolve or the CPAP or APAP treatment seems to lack efficacy.	Standard

Modified from Berry RB, Parish JM, Hartse KM. The use of auto-titrating continuous positive airway pressure for treatment of adult obstructive sleep apnea: an American Academy of Sleep Medicine review. Sleep 2002;25:148; with permission.

successful in some patients, however. Use of APAP for titration does not seem to impact compliance negatively. Data on the impact on health care resources of a patient-care strategy that incorporates APAP devices for titration are preliminary.

Recommendations for the clinical use of automatic positive airway pressure

Several authors have presented algorithms for the use of APAP in the unattended setting for diagnosis and therapy [23,42]. In general, in the straightforward patient with classic signs and symptoms of OSA [118,119] without complicating disorders, such as respiratory insufficiency or congestive heart failure or reasons for mask/mouth leak, APAP could be used for diagnosis. If the study is positive and of satisfactory quality, APAP then could be used for therapy, with close patient follow-up for resolution of symptoms and compliance. If the study is negative or of poor quality or if the patient's symptoms are persistent, conventional in-laboratory attended PSG would be recommended. Careful patient selection, patient education and support, and close follow-up must be incorporated into the algorithm to ensure the success of such a strategy [27]. Although appealing in many respects, the effect of this strategy on long-term outcomes of OSA has yet to be tested formally in a large series of patients.

Practice parameters for the use of APAP devices for titrating pressures and treating patients with OSA have been published recently by the American Academy of Sleep Medicine [120]. Available data on the therapeutic and titrating but not diagnostic roles of APAP were reviewed by the Standards of Practice Committee of the American Academy of Sleep Medicine [69], and studies were graded according to levels of evidence [121]. Based on this review, the committee made recommendations for the clinical use of APAP, which were approved by the Board of Directors of the American Academy of Sleep Medicine. As noted in Table 5, practice parameters were divided into standards (a generally accepted patient-care strategy, which reflects a high degree of clinical certainty), guidelines (a patient-care strategy which reflects a moderate degree of clinical certainty), and options (uncertain patient-care strategy) [122].

Summary

Automatic positive airway pressure devices are the most technologically advanced positive airway pressure devices available for use in OSA. Although heterogeneous, they have in common the ability to detect and respond to changes in upper airway resistance. Data cannot necessarily be extrapolated from one device to another, and the field is rapidly advancing. Most studies of APAP have been performed in a supervised setting, or patients have been carefully selected to have a high likelihood of OSA uncomplicated by disorders such as alveolar hypoventilation or central apnea or technical problems such as mask leaks. Studies of APAP for the diagnosis of OSA have shown that APAP can diagnose severe OSA effectively, but the diagnosis of mild-moderate OSA is less reliable. APAP devices also can be effective therapy for selected patients with OSA, with overall similar results to conventional fixed CPAP in terms of respiratory disturbances, sleep quality, nocturnal oxygenation, and daytime sleepiness and performance, with less known or other long-term outcomes. In most studies, mean treatment pressures are lower, without change in side effect profile. Compliance and preference with APAP are similar to or somewhat better than CPAP in most studies. APAP also can be used in an attended setting to titrate an effective pressure for use in long-term conventional CPAP therapy, also with similar results to CPAP in many patients. APAP devices are more expensive than CPAP devices, but the cost may be outweighed if a group of patients who can be diagnosed, treated, or titrated safely in the unattended setting can be identified. Although diagnostic and therapeutic algorithms for APAP have been proposed, the best candidates for this modality must be defined better.

References

[1] Sullivan CE, Issa FG, Berthon-Jones M, Eves L. Reversal of obstructive sleep apnoea by continuous positive airway pressure applied through the nares. Lancet 1981;1:862.
[2] Loube DI, Gay PC, Strohl KP, Pack AI, White DP, Collop NA. Indications for positive airway pressure treatment of adult obstructive sleep apnea patients: a consensus statement. Chest 1999;115:863.
[3] Rapoport DM. Methods to stabilize the upper airway using positive pressure. Sleep 1996;19:S123.
[4] Iber C, O'Brien C, Schluter J, Davies S, Leatherman J, Mahowald M. Single night studies in obstructive sleep apnea. Sleep 1991;14:383.
[5] McArdle N, Douglas NJ. Effect of continuous positive airway pressure on sleep architecture in the sleep apnea-hypopnea syndrome: a randomized controlled trial. Am J Respir Crit Care Med 2001;164:1459.
[6] Lamphere J, Roehrs T, Wittig R, Zorick F, Conway

WA, Roth T. Recovery of alertness after CPAP in apnea. Chest 1989;96:1364.

[7] Jenkinson C, Davies RJ, Mullins R, Stradling JR. Comparison of therapeutic and subtherapeutic nasal continuous positive airway pressure for obstructive sleep apnoea: a randomised prospective parallel trial. Lancet 1999;353:2100.

[8] Montserrat JM, Ferrer M, Hernandez L, Farre R, Vilagut G, Navajas D, et al. Effectiveness of CPAP treatment in daytime function in sleep apnea syndrome: a randomized controlled study with an optimized placebo. Am J Respir Crit Care Med 2001; 164:608.

[9] Bardwell WA, Ancoli-Israel S, Berry CC, Dimsdale JE. Neuropsychological effects of one-week continuous positive airway pressure treatment in patients with obstructive sleep apnea: a placebo-controlled study. Psychosom Med 2001;63:579.

[10] Findley LJ, Fabrizio MJ, Knight H, Norcross BB, LaForte AJ, Suratt PM. Driving simulator performance in patients with sleep apnea. Am Rev Respir Dis 1989;140:529.

[11] Findley L, Smith C, Hooper J, Dineen M, Suratt PM. Treatment with nasal CPAP decreases automobile accidents in patients with sleep apnea. Am J Respir Crit Care Med 2000;161:857.

[12] D'Ambrosio C, Bowman T, Mohsenin V. Quality of life in patients with obstructive sleep apnea: effect of nasal continuous positive airway pressure. A prospective study. Chest 1999;115:123.

[13] He J, Kryger MH, Zorick FJ, Conway W, Roth T. Mortality and apnea index in obstructive sleep apnea: experience in 385 male patients. Chest 1988;94:9.

[14] Worsnop CJ, Pierce RJ, Naughton M. Systemic hypertension and obstructive sleep apnea. Sleep 1993; 16:S148.

[15] Faccenda JF, Mackay TW, Boon NA, Douglas NJ. Randomized placebo-controlled trial of continuous positive airway pressure on blood pressure in the sleep apnea-hypopnea syndrome. Am J Respir Crit Care Med 2001;163:344.

[16] Strollo Jr PJ, Sanders MH, Atwood CW. Positive pressure therapy. Clin Chest Med 1998;19:55.

[17] Behbehani K, Yen FC, Burk JR, Lucas EA, Axe JR. Automatic control of airway pressure for treatment of obstructive sleep apnea. IEEE Trans Biomed Eng 1995;42:1007.

[18] Berthon-Jones M. Feasibility of a self-setting CPAP machine. Sleep 1993;16:S120.

[19] Gugger M, Mathis J, Bassetti C. Accuracy of an intelligent CPAP machine with in-built diagnostic abilities in detecting apnoeas: a comparison with polysomnography. Thorax 1995;50:1199.

[20] Fleury B, Rakotonanahary D, Hausser-Hauw C, Lebeau B, Guilleminault C. A laboratory validation study of the diagnostic mode of the Autoset system for sleep-related respiratory disorders. Sleep 1996;19:502.

[21] Bradley PA, Mortimore IL, Douglas NJ. Comparison of polysomnography with ResCare Autoset in the diagnosis of the sleep apnoea/hypopnoea syndrome. Thorax 1995;50:1201.

[22] Kiely JL, Delahunty C, Matthews S, McNicholas WT. Comparison of a limited computerized diagnostic system (ResCare Autoset) with polysomnography in the diagnosis of obstructive sleep apnoea syndrome. Eur Respir J 1996;9:2360.

[23] Gugger M. Comparison of ResMed AutoSet (version 3.03) with polysomnography in the diagnosis of the sleep apnoea/hypopnoea syndrome. Eur Respir J 1997;10:587.

[24] Lloberes P, Ballester E, Montserrat JM, Botifoll E, Ramirez A, Reolid A, et al. Comparison of manual and automatic CPAP titration in patients with sleep apnea/hypopnea syndrome. Am J Respir Crit Care Med 1996;154:1755.

[25] Teschler H, Berthon-Jones M, Thompson AB, Henkel A, Henry J, Konietzko N. Automated continuous positive airway pressure titration for obstructive sleep apnea syndrome. Am J Respir Crit Care Med 1996; 154:734.

[26] Teschler H, Farhat AA, Exner V, Konietzko N, Berthon-Jones M. AutoSet nasal CPAP titration: constancy of pressure, compliance and effectiveness at 8 month follow-up. Eur Respir J 1997;10:2073.

[27] Teschler H, Berthon-Jones M. Intelligent CPAP systems: clinical experience. Thorax 1998;53 (Suppl 3):S49.

[28] Rees K, Wraith PK, Berthon-Jones M, Douglas NJ. Detection of apnoeas, hypopnoeas and arousals by the AutoSet in the sleep apnoea/hypopnoea syndrome. Eur Respir J 1998;12:764.

[29] ?Mayer P, Meurice JC, Philip-Joet F, Cornette A, Rakotonanahary D, Meslier N, et al. Simultaneous laboratory-based comparison of ResMed Autoset with polysomnography in the diagnosis of sleep apnoea/hypopnoea syndrome. Eur Respir J 1998; 12:770.

[30] Teschler H, Wessendorf TE, Farhat AA, Konietzko N, Berthon-Jones M. Two months auto-adjusting versus conventional nCPAP for obstructive sleep apnoea syndrome. Eur Respir J 2000;15:990.

[31] Gagnadoux F, Rakotonanahary D, Martins de Araujo MT, Barros-Vieira S, Fleury B. Long-term efficacy of fixed CPAP recommended by Autoset for OSAS. Sleep 1999;22:1095.

[32] Marrone O, Insalaco G, Bonsignore MR, Romano S, Salvaggio A, Bonsignore G. Sleep structure correlates of continuous positive airway pressure variations during application of an autotitrating continuous positive airway pressure machine in patients with obstructive sleep apnea syndrome. Chest 2002;121:759.

[33] Lofaso F, Lerou K, Quera S, Mroue G, Dortho MP, Isabey D, et al. Snoring detection during auto-nasal continuous positive airway pressure. Eur Respir J 2002;19:108.

[34] Berkani M, Lofaso F, Chouaid C, Pia d'Ortho M, Theret D, Grillier-Lanoir V, et al. CPAP titration by an auto-CPAP device based on snoring detection: a

clinical trial and economic considerations. Eur Respir J 1998;12:759.

[35] Ficker JH, Wiest GH, Lehnert G, Wiest B, Hahn EG. Evaluation of an auto-CPAP device for treatment of obstructive sleep apnoea. Thorax 1998;53:643.

[36] Boudewyns A, Grillier-Lanoir V, Willemen MJ, De Cock WA, Van de Heyning PH, De Backer WA. Two months follow up of auto-CPAP treatment in patients with obstructive sleep apnoea. Thorax 1999; 54:147.

[37] d'Ortho MP, Grillier-Lanoir V, Levy P, Goldenberg F, Corriger E, Harf A, et al. Constant vs. automatic continuous positive airway pressure therapy: home evaluation. Chest 2000;118:1010.

[38] Scharf MB, Brannen DE, McDannold MD, Berkowitz DV. Computerized adjustable versus fixed nCPAP treatment of obstructive sleep apnea. Sleep 1996;19:491.

[39] Stradling JR, Barbour C, Pitson DJ, Davies RJ. Automatic nasal continuous positive airway pressure titration in the laboratory: patient outcomes. Thorax 1997;52:72.

[40] Konermann M, Sanner BM, Vyleta M, Laschewski F, Groetz J, Sturm A, et al. Use of conventional and self-adjusting nasal continuous positive airway pressure for treatment of severe obstructive sleep apnea syndrome: a comparative study. Chest 1998;113:714.

[41] Lafond C, Series F. Influence of nasal obstruction on auto-CPAP behaviour during sleep in sleep apnoea/hypopnoea syndrome. Thorax 1998;53:780.

[42] Fletcher EC, Stich J, Yang KL. Unattended home diagnosis and treatment of obstructive sleep apnea without polysomnography. Arch Fam Med 2000;9:168.

[43] Meurice JC, Marc I, Series F. Efficacy of auto-CPAP in the treatment of obstructive sleep apnea/hypopnea syndrome. Am J Respir Crit Care Med 1996;153:794.

[44] Series F, Marc I. Efficacy of automatic continuous positive airway pressure therapy that uses an estimated required pressure in the treatment of the obstructive sleep apnea syndrome. Ann Intern Med 1997;127:588.

[45] Series F. Accuracy of an unattended home CPAP titration in the treatment of obstructive sleep apnea. Am J Respir Crit Care Med 2000;162:94.

[46] Series F, Marc I. Importance of sleep stage- and body position-dependence of sleep apnoea in determining benefits to auto-CPAP therapy. Eur Respir J 2001; 18:170.

[47] Lofaso F, Lorino AM, Duizabo D, Najafi Zadeh H, Theret D, Goldenberg F, et al. Evaluation of an auto-nCPAP device based on snoring detection. Eur Respir J 1996;9:1795.

[48] Randerath WJ, Parys K, Feldmeyer F, Sanner B, Ruhle KH. Self-adjusting nasal continuous positive airway pressure therapy based on measurement of impedance: a comparison of two different maximum pressure levels. Chest 1999;116:991.

[49] Ficker JH, Fuchs FS, Wiest GH, Asshoff G, Schmelzer AH, Hahn EG. An auto-continuous positive airway pressure device controlled exclusively by the forced oscillation technique. Eur Respir J 2000;16:914.

[50] Randerath W, Parys K, Lehmann D, Sanner B, Feldmeyer F, Ruhle KH. Self-adjusting continuous positive airway pressure therapy based on the measurement of impedance: a comparison of free pressure variation and individually fixed higher minimum pressure. Respiration 2000;67:272.

[51] Randerath WJ, Schraeder O, Galetke W, Feldmeyer F, Ruhle KH. Autoadjusting CPAP therapy based on impedance efficacy, compliance and acceptance. Am J Respir Crit Care Med 2001;163:652.

[52] Randerath WJ, Galetke W, David M, Siebrecht H, Sanner B, Ruhle K. Prospective randomized comparison of impedance-controlled auto-continuous positive airway pressure (APAP(FOT)) with constant CPAP. Sleep Med 2001;2:115.

[53] Fuchs FS, Wiest GH, Frank M, Harsch IA, Schahin SP, Hahn EG, et al. Auto-CPAP therapy for obstructive sleep apnea: induction of microarousals by automatic variations of CPAP pressure? Sleep 2002; 25:514.

[54] Sharma S, Wali S, Pouliot Z, Peters M, Neufeld H, Kryger M. Treatment of obstructive sleep apnea with a self-titrating continuous positive airway pressure (CPAP) system. Sleep 1996;19:497.

[55] Hudgel DW, Fung C. A long-term randomized, crossover comparison of auto-titrating and standard nasal continuous airway pressure. Sleep 2000;23:645.

[56] Miyazaki S, Itasaka Y, Ishikawa K, Togawa K. Evaluation of the auto continuous positive airway pressure efficacy by upper airway pressure measurement. Psychiatry Clin Neurosci 1999;53:327.

[57] Behbehani K, Yen FC, Lucas EA, Burk JR. A sleep laboratory evaluation of an automatic positive airway pressure system for treatment of obstructive sleep apnea. Sleep 1998;21:485.

[58] DuBois AB, Brody AW, Lewis DH, Burgess BF. Oscillation mechanics of lungs and chest in man. J Appl Physiol 1956;8:587.

[59] Montserrat JM, Farre R, Navajas D. New technologies to detect static and dynamic upper airway obstruction during sleep. Sleep Breath 2001;5:193.

[60] Farre R, Peslin R, Rotger M, Navajas D. Inspiratory dynamic obstruction detected by forced oscillation during CPAP: a model study. Am J Respir Crit Care Med 1997;155:952.

[61] Badia JR, Farre R, Montserrat JM, Ballester E, Hernandez L, Rotger M, et al. Forced oscillation technique for the evaluation of severe sleep apnoea/hypopnoea syndrome: a pilot study. Eur Respir J 1998;11:1128.

[62] Navajas D, Farre R, Rotger M, Badia R, Puig-de-Morales M, Montserrat JM. Assessment of airflow obstruction during CPAP by means of forced oscillation in patients with sleep apnea. Am J Respir Crit Care Med 1998;157:1526.

[63] Ficker JH, Wiest GH, Asshoff G, Fuchs FS, Schmelzer AH, Harsch IA, et al. Sensitivity of a simplified

forced oscillation technique for detection of upper airway obstruction. Respir Physiol 2001;124:243.

[64] Condos R, Norman RG, Krishnasamy I, Peduzzi N, Goldring RM, Rapoport DM. Flow limitation as a noninvasive assessment of residual upper-airway resistance during continuous positive airway pressure therapy of obstructive sleep apnea. Am J Respir Crit Care Med 1994;150:475.

[65] Montserrat J, Ballester E, Olivi H, Reolid A, Lloberes P, Morello A, et al. Time-course of stepwise CPAP titration: behavior of respiratory and neurological variables. Am J Respir Crit Care Med 1995; 152:1854.

[66] Ayappa I, Norman RG, Hosselet JJ, Gruenke RA, Walsleben JA, Rapoport DM. Relative occurrence of flow limitation and snoring during continuous positive airway pressure titration. Chest 1998;114:685.

[67] Krieger J. Therapeutic use of auto-CPAP. Sleep Med Rev 1999;3:159.

[68] Badia JR, Farre RO, John Kimoff R, Ballester E, Hernandez L, Rotger M, et al. Clinical application of the forced oscillation technique for CPAP titration in the sleep apnea/hypopnea syndrome. Am J Respir Crit Care Med 1999;160:1550.

[69] Berry RB, Parish JM, Hartse KM. The use of autotitrating continuous positive airway pressure for treatment of adult obstructive sleep apnea: an American Academy of Sleep Medicine review. Sleep 2002; 25:148.

[70] Steltner H, Staats R, Timmer J, Vogel M, Guttmann J, Matthys H, et al. Diagnosis of sleep apnea by automatic analysis of nasal pressure and forced oscillation impedance. Am J Respir Crit Care Med 2002;165:940.

[71] Farre R, Montserrat JM, Rigau J, Trepat X, Pinto P, Navajas D. Response of automatic continuous positive airway pressure devices to different sleep breathing patterns: a bench study. Am J Respir Crit Care Med 2002;166:469.

[72] American Sleep Disorders Association. Practice parameters for the indications for polysomnography and related procedures. Sleep 1997;20:406.

[73] Chesson Jr AL, Ferber RA, Fry JM, Grigg-Damberger M, Hartse KM, Hurwitz TD, et al. The indications for polysomnography and related procedures. Sleep 1997;20:423.

[74] Redline S, Kapur VK, Sanders MH, Quan SF, Gottlieb DJ, Rapoport DM, et al. Effects of varying approaches for identifying respiratory disturbances on sleep apnea assessment. Am J Respir Crit Care Med 2000;161:369.

[75] American Academy of Sleep Medicine Task Force. Sleep-related breathing disorders in adults: recommendations for syndrome definition and measurement techniques in clinical research. Sleep 1999;22:667.

[76] Thomas RJ. Definitions of respiratory events in sleep-disordered breathing. Sleep Med 2002;3:89.

[77] Hosselet J, Ayappa I, Norma RG, Krieger AC, Rapoport DM. Classification of sleep-disordered breathing. Am J Respir Crit Care Med 2001;163:398.

[78] Meyer TJ, Eveloff SE, Kline LR, Millman RP. One negative polysomnogram does not exclude obstructive sleep apnea. Chest 1993;103:756.

[79] Le Bon O, Hoffmann G, Tecco J, Staner L, Noseda A, Pelc I, et al. Mild to moderate sleep respiratory events: one negative night may not be enough. Chest 2000;118:353.

[80] Namen AM, Dunagan DP, Fleischer A, Tillett J, Barnett M, McCall WV, et al. Increased physician-reported sleep apnea(*): the national ambulatory medical care survey. Chest 2002;121:1741.

[81] Ferber R, Millman R, Coppola M, Fleetham J, Murray CF, Iber C, et al. Portable recording in the assessment of obstructive sleep apnea: ASDA standards of practice. Sleep 1994;17:378.

[82] Thorpy M, Chesson A, Ferber R, Kader G, Millman R, Reite M, et al. Practice parameters for the use of portable recording in the assessment of obstructive sleep apnea: an American Sleep Disorders Association report. Sleep 1994;17:372.

[83] Indications for the clinical use of unattended portable recording for the diagnosis of sleep-related breathing disorders. ASDA News 1999;6:19.

[84] Krieger J, Sforza E, Petiau C, Weiss T. Simplified diagnostic procedure for obstructive sleep apnoea syndrome: lower subsequent compliance with CPAP. Eur Respir J 1998;12:776.

[85] Javaheri S. Effects of continuous positive airway pressure on sleep apnea and ventricular irritability in patients with heart failure. Circulation 2000;101:392.

[86] Peled N, Abinader EG, Pillar G, Sharif D, Lavie P. Nocturnal ischemic events in patients with obstructive sleep apnea syndrome and ischemic heart disease: effects of continuous positive air pressure treatment. J Am Coll Cardiol 1999;34:1744.

[87] Parker JD, Brooks D, Kozar LF, Render-Teixeira CL, Horner RL, Douglas Bradley T, et al. Acute and chronic effects of airway obstruction on canine left ventricular performance. Am J Respir Crit Care Med 1999;160:1888.

[88] Bahammam A, Delaive K, Ronald J, Manfreda J, Roos L, Kryger MH. Health care utilization in males with obstructive sleep apnea syndrome two years after diagnosis and treatment. Sleep 1999;22:740.

[89] Kribbs NB, Pack AI, Kline LR, Smith PL, Schwartz AR, Schubert NM, et al. Objective measurement of patterns of nasal CPAP use by patients with obstructive sleep apnea. Am Rev Respir Dis 1993;147:887.

[90] McArdle N, Devereux G, Heidarnejad H, Engleman HM, Mackay TW, Douglas NJ. Long-term use of CPAP therapy for sleep apnea/hypopnea syndrome. Am J Respir Crit Care Med 1999;159:1108.

[91] Pepin JL, Leger P, Veale D, Langevin B, Robert D, Levy P. Side effects of nasal continuous positive airway pressure in sleep apnea syndrome: study of 193 patients in two French sleep centers. Chest 1995; 107:375.

[92] Hoy CJ, Vennelle M, Kingshott RN, Engleman HM, Douglas NJ. Can intensive support improve continu-

ous positive airway pressure use in patients with the sleep apnea/hypopnea syndrome? Am J Respir Crit Care Med 1999;159:1096.

[93] Chervin RD, Theut S, Bassetti C, Aldrich MS. Compliance with nasal CPAP can be improved by simple interventions. Sleep 1997;20:284.

[94] Wittig RM, Romaker A, Zorick FJ, Roehrs TA, Conway WA, Roth T. Night-to-night consistency of apneas during sleep. Am Rev Respir Dis 1984;129:244.

[95] Oksenberg A, Silverberg DS, Arons E, Radwan H. The sleep supine position has a major effect on optimal nasal continuous positive airway pressure: relationship with rapid eye movements and non-rapid eye movements sleep, body mass index, respiratory disturbance index, and age. Chest 1999;116:1000.

[96] Cartwright RD. Effect of sleep position on sleep apnea severity. Sleep 1984;7:110.

[97] Pevernagie DA, Shepard Jr JW. Relations between sleep stage, posture and effective nasal CPAP levels in OSA. Sleep 1992;15:162.

[98] Issa FG, Sulllivan CE. Alcohol, snoring, and sleep apnea. J Neurol Neurosurg Psychiatry 1982;45:353.

[99] Teschler H, Berthon-Jones M, Wessendorf T, Meyer HJ, Konietzko N. Influence of moderate alcohol consumption on obstructive sleep apnoea with and without AutoSet nasal CPAP therapy. Eur Respir J 1996; 9:2371.

[100] Dolly FR, Block AJ. Effect of florazepam on sleep-disordered breathing and nocturnal oxygen desaturation in asymptomatic subjects. Am J Med 1982; 73:239.

[101] Richards GN, Cistulli PA, Ungar RG, Berthon-Jones M, Sullivan CE. Mouth leak with nasal continuous positive airway pressure increases nasal airway resistance. Am J Respir Crit Care Med 1996;154:182.

[102] Farre R, Peslin R, Montserrat JM, Rotger M, Navajas D. Flow-dependent positive airway pressure to maintain airway patency in sleep apnea-hypopnea syndrome. Am J Respir Crit Care Med 1998;157:1855.

[103] Bacon JP, Farney RJ, Jensen RL, Walker JM, Cloward TV. Nasal continuous positive airway pressure devices do not maintain the set pressure dynamically when tested under simulated clinical conditions. Chest 2000;118:1441.

[104] Browman CP, Sampson MG, Gujavarty KS, Weiler SJ, Walseben JA, Hahn PM, et al. Obstructive sleep apnea and body weight. Chest 1984;85:435.

[105] Series F, Marc I, Cormier Y, La Forge J. Required levels of nasal continuous positive airway pressure during treatment of obstructive sleep apnoea. Eur Respir J 1994;7:1776.

[106] Ryan CF, Lowe AA, Li D, Fleetham JA. Magnetic resonance imaging of the upper airway in obstructive sleep apnea before and after chronic nasal continuous positive airway pressure therapy. Am Rev Respir Dis 1991;144:939.

[107] Boudewyns A, Van de Heyning P, De Backer W. Appearance of central apnoea in a patient treated by auto-CPAP for obstructive sleep apnoea. Respir Med 1998;92:891.

[108] Johns M. A new method of measuring daytime sleepiness: the Epworth Sleepiness Scale. Sleep 1991; 14:540.

[109] Richardson GS, Carskadon MA, Flagg W, Vanden-Hoed J, Dement WC, Mitler MM. Excessive daytime sleepiness in man: multiple sleep latency test measurement in narcoleptics and control subjects. Electroencephalogr Clin Neurophysiol 1978;45:621.

[110] American Sleep Disorders Association. The clinical use of the multiple sleep latency test. Sleep 1992; 15:268.

[111] Mitler MM, Gujavarty KS, Broman CP. Maintenance of wakefulness test: a polysomnographic technique for evaluating treatment efficacy in patients with excessive somnolence. Electroencephalogr Clin Neurophysiol 1982;53:658.

[112] Miljeteig H, Hoffstein V. Determinants of continuous positive airway pressure level for treatment of obstructive sleep apnea. Am Rev Respir Dis 1993; 147:1526.

[113] Coppola MP, Lawee M. Management of obstructive sleep apnea syndrome in the home: the role of portable recording. Chest 1993;104:19.

[114] Waldhorn RE, Wood K. Attended home titration of nasal continuous positive pressure therapy for obstructive sleep apnea. Chest 1993;104:1707.

[115] Juhasz J, Schillen J, Urbigkeit A, Ploch T, Penzel T, Peter JH. Unattended continuous positive airway pressure titration: clinical relevance and cardiorespiratory hazards of the method. Am J Respir Crit Care Med 1996;154:359.

[116] White DP, Gibb TJ. Evaluation of the Healthdyne NightWatch system to titrate CPAP in the home. Sleep 1998;21:198.

[117] Mortimore IL, Bradley PA, Murray JA, Douglas NJ. Uvulopalatopharyngoplasty may compromise nasal CPAP therapy in sleep apnea syndrome. Am J Respir Crit Care Med 1996;154:1759.

[118] Strohl KP, Redline S. Recognition of obstructive sleep apnea. Am J Respir Crit Care Med 1996; 154:279.

[119] Flemons WW, McNicholas WT. Clinical prediction of the sleep apnea syndrome. Sleep Med Rev 1997; 1:19.

[120] Littner M, Hirshkowitz M, Davila D, Anderson WM, Kushida CA, Woodson BT, et al. Practice parameters for the use of auto-titrating continuous positive airway pressure devices for titrating pressures and treating adult patients with obstructive sleep apnea syndrome: an American Academy of Sleep Medicine report. Sleep 2002;25:143.

[121] Sackett D. Rules of evidence and the clinical recommendations for the management of patients. Can J Cardiol 1993;9:487.

[122] Eddy DM. A manual for assessing health practices and designing practice policies: the explicit approach. Philadelphia: American College of Physicians; 1992.