US005746699A

United States Patent [19]

Fredberg et al.

[11] **Patent Number: 5,746,699**

[45] **Date of Patent: May 5, 1998**

[54] **ACOUSTIC IMAGING**

[75] Inventors: **Jeffrey Fredberg**, Sharon; **Gary Glass**, Boston; **John Lehr**, Newton, all of Mass.; **Bruno Louis**, Puteaux, France

[73] Assignees: **Hood Laboratories**, Pembroke; **Biomechanics, Inc.**, Boston, both of Mass.

[21] Appl. No.: **769,697**

[22] Filed: **Dec. 18, 1996**

Related U.S. Application Data

[60] Division of Ser. No. 117,176, Jun. 16, 1993, Pat. No. 5,666,960, which is a continuation-in-part of Ser. No. 808,907, Dec. 17, 1991.

[51] **Int. Cl.**[6] **A61B 8/00**

[52] **U.S. Cl.** **600/529**

[58] **Field of Search** 128/207.18, 716–720; 73/574, 589, 597; 600/529

[56] **References Cited**

U.S. PATENT DOCUMENTS

3,713,434	1/1973	Leslie, Jr.	128/717
3,747,597	7/1973	Olivera	55/309
4,031,569	6/1977	Jacob	623/10
4,660,555	4/1987	Payton	128/207.18
5,024,220	6/1991	Holmgreen et al.	128/207.18

Primary Examiner—Franois Javorski
Attorney, Agent, or Firm—Kane, Dalsimer, Sullivan, Kurucz, Levy, Eisele and Richard

[57] **ABSTRACT**

Single hand supportable and operable apparatus for providing an output signal characteristic of the morphology of a respiratory tract includes an acoustic pipe for exchanging acoustical energy with the tract. The pipe has an open first end in communication with an opening in the respiratory tract. A transducer, such as a loudspeaker, is coupled to the pipe for launching acoustical energy into the pipe, producing an incident wave towards the opening in the tract and a reflected wave to form a transient wave field in the pipe representative of the morphology of the tract. Preferably, first and second pressure wave sensing transducers, such as microphones, mounted along the length of the pipe in spaced relationship provide first and second transduced signals representative of the transient wave field. A processor processes the first and second transduced signals to provide an output signal characteristic of the morphology of the tract, such as the cross-sectional area as a function of the distance from the opening in the tract.

9 Claims, 4 Drawing Sheets

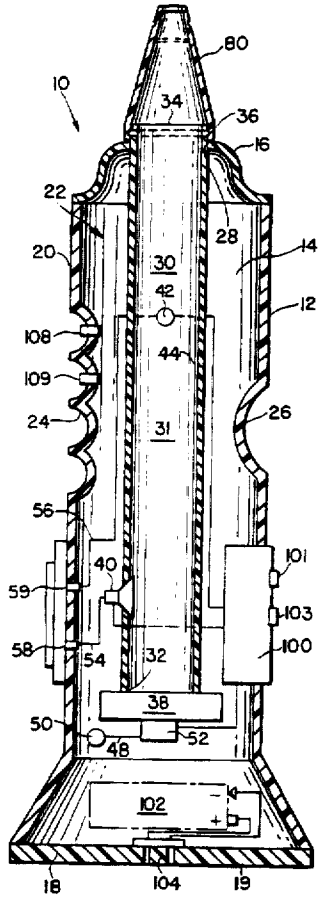

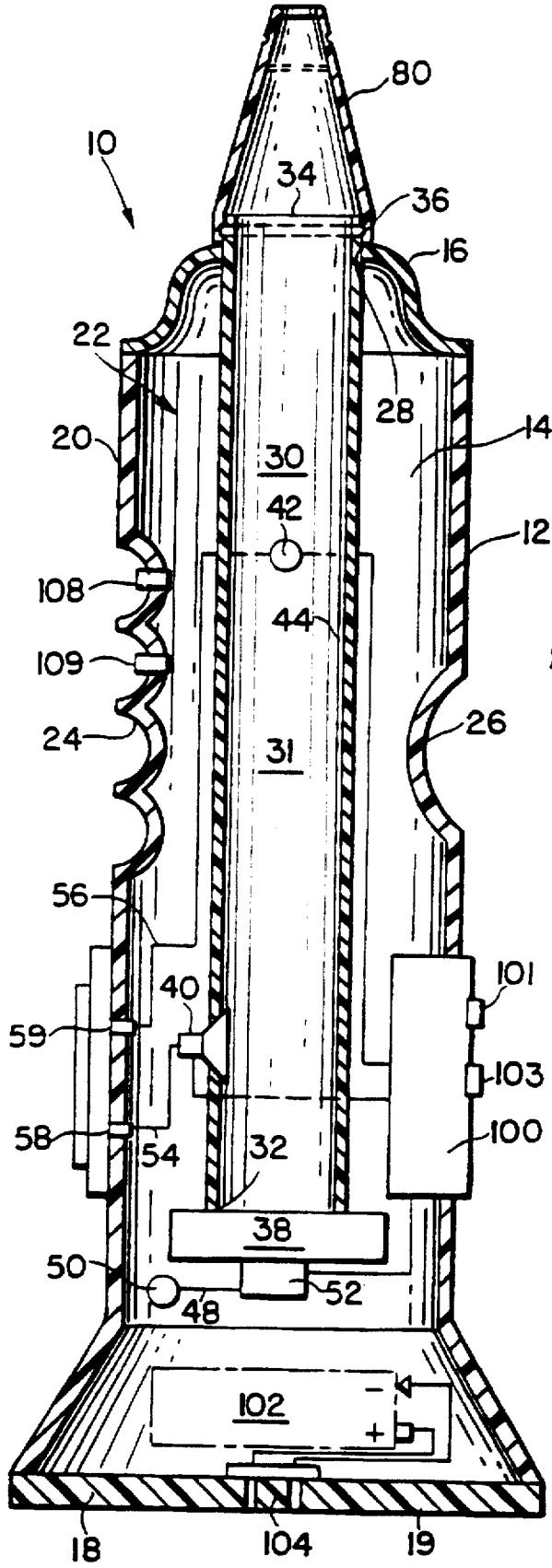
80
10
34
36
16
22
28
20
30
14
42
12
108
44
109
24
26
31
56
40
101
59
103
58
54
32
100
38
50
52
48
102
18
104
19

FIG. 1

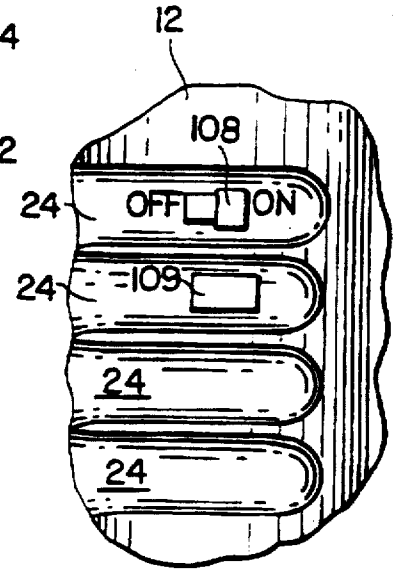
12
108
24
OFF
ON
24
109
24
24

FIG. 3

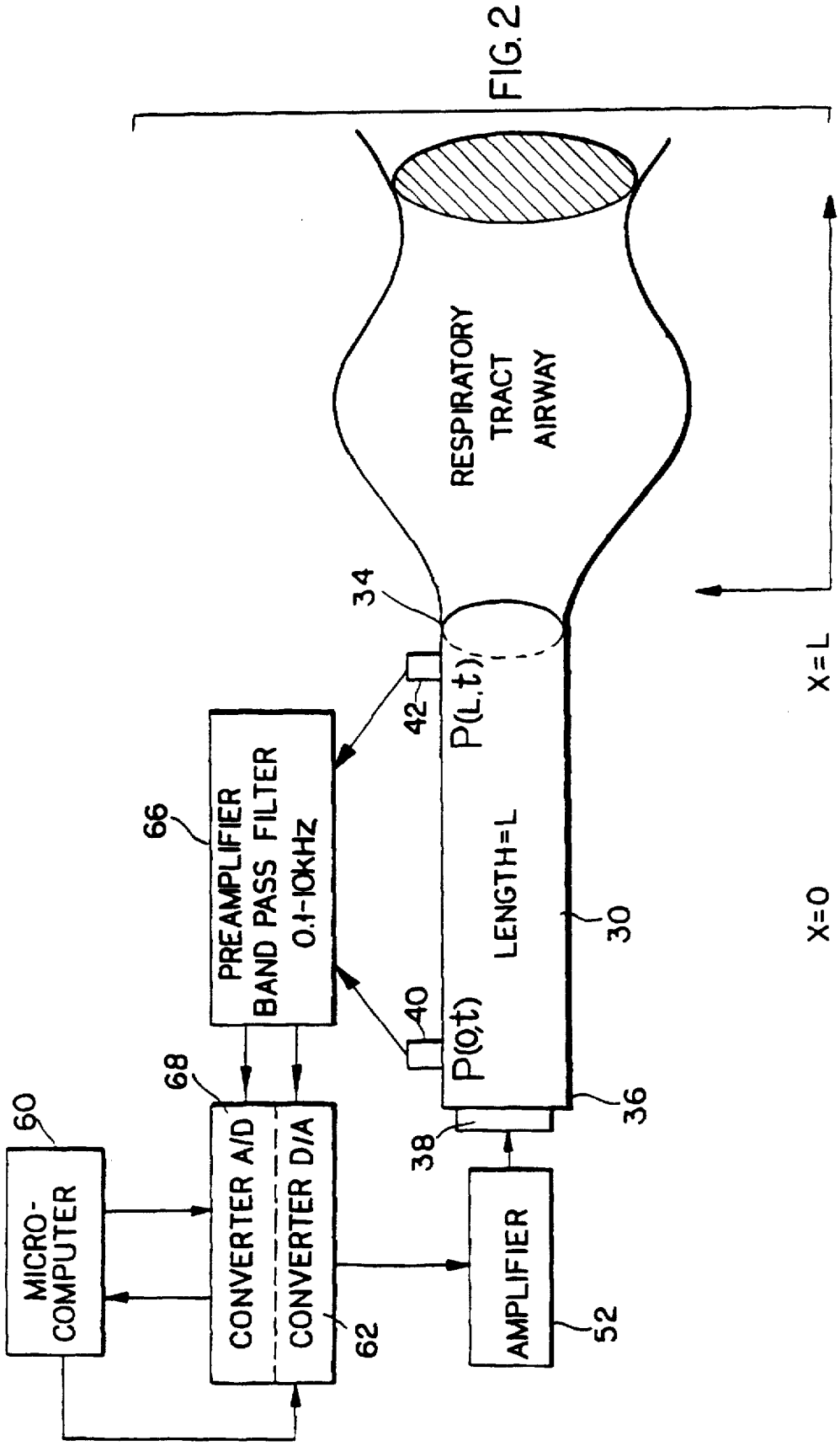
FIG. 2
RESPIRATORY
TRACT
AIRWAY
34
42
P(L,t)
66
PREAMPLIFIER
BAND PASS FILTER
0.1-10KHz
LENGTH=L
30
X=L
X=0
40
P(0,t)
68
36
38
60
MICRO-
COMPUTER
CONVERTER A/D
CONVERTER D/A
62
AMPLIFIER
52

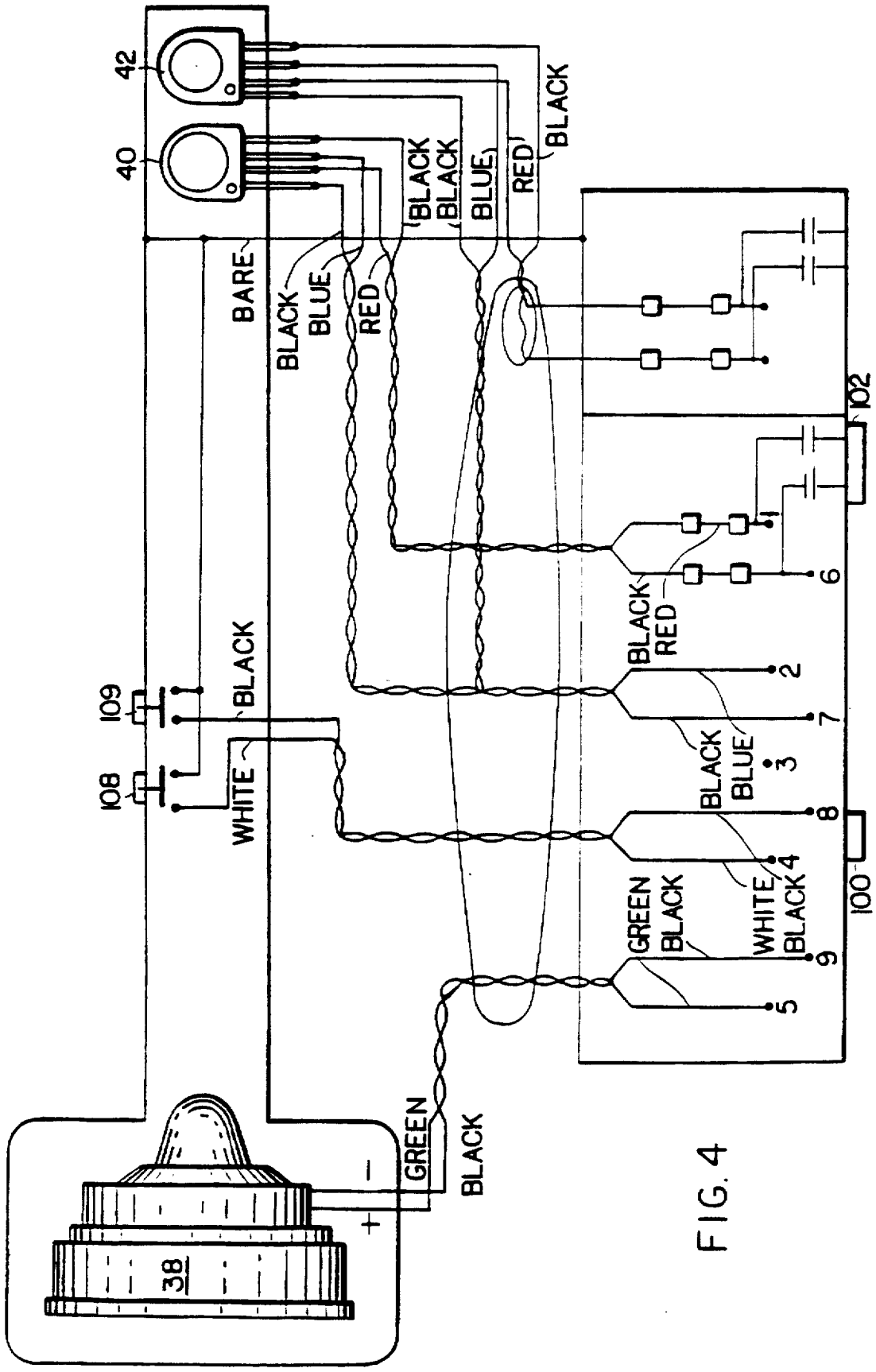
42
40
BLACK
BLACK
BLUE
RED
BLACK
BARE
BLACK
BLUE
RED
102
BLACK
RED
6
1
2
7
BLACK
BLUE
3
8
4
WHITE
BLACK
100
GREEN
BLACK
WHITE
BLACK
9
5
109
108
BLACK
WHITE
GREEN
BLACK
38
+
−

FIG. 4

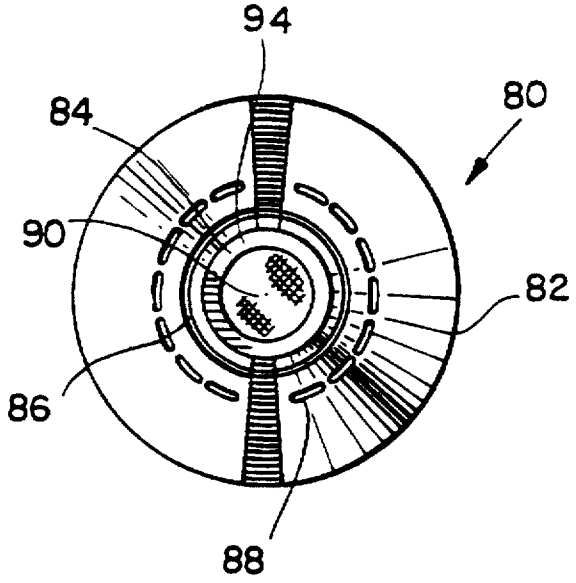

FIG. 6

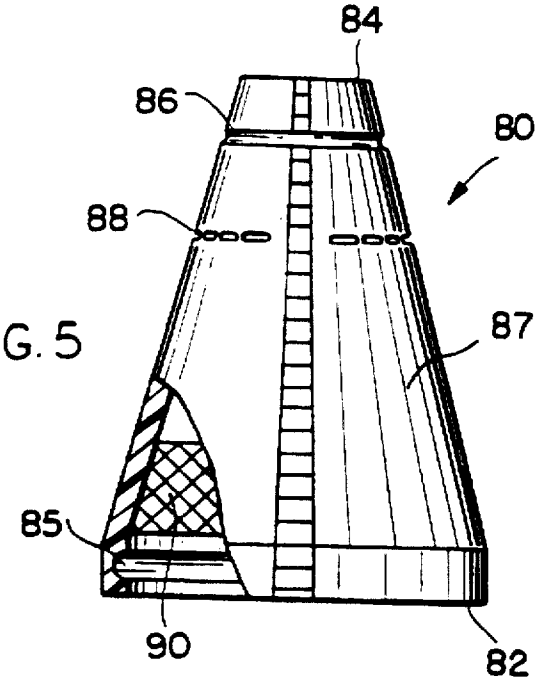

FIG. 5

FIG. 7

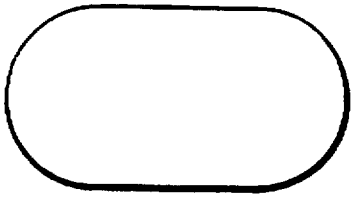

ACOUSTIC IMAGING

CROSS-REFERENCE TO RELATED APPLICATION

This application is a division of U.S. patent application Ser. No. 08/117,176 filed on Jun. 16, 1993 and now U.S. Pat. No. 5,666,960, which was a Continuation-In-Part of U.S. patent application Ser. No. 07/808,907 filed on Dec. 17, 1991.

BACKGROUND OF THE INVENTION

1. Field of the Invention

This invention relates to acoustic imaging of mammalian airway morphology and more particularly concerns noninvasively obtaining a signal representative of the cross-sectional area of an airway (e.g., oral, nasal, or pulmonary) of a subject (e.g., a person or an animal) using electroacoustical transducers.

2. Brief Description of Related Art

A one-dimensional image of the cross-sectional area of an airway as a function of axial position along the airway may be determined from acoustic reflections measured by a single electro-acoustic transducer placed in a position remote from the airway opening. This image is referred to as an area-distance function and is represented by A(x) where x is the axial position along the airway.

Knowledge of the area-distance function, A(x), is useful for example in the diagnosis of mammalian pathologies associated with oral airways, larynx, pulmonary airways, and nasal airways. These pathologies include but are not limited to obstructive sleep apnea, asthma, obstructive pulmonary disease, tracheal stenosis, and nasal septum deviation.

Accurate information about the area-distance function is also useful in the study of airway growth and its disruption and sequelae of bronchopulmonary dysplasia in children.

One approach to using a single electro-acoustic transducer in acoustic imaging is described in U.S. Pat. No. 4,326,416 granted Apr. 27, 1982, to Jeffrey J. Fredberg entitled ACOUSTIC PULSE RESPONSE MEASURING. In all of the single-transducer approaches described previously, a hidden constraint pertains. The associated theories assume implicitly that once propagating to the left within the apparatus, acoustic returns encounter no reflection sites within the wave-tube apparatus itself, which is assumed to be a reflectionless transmission line; there must be no secondary rightward travelling waves and no acoustic reverberation within the wave tube. However, since the loudspeaker is an unavoidable and major reflection site for the wave travelling to the left, the distance separating the loudspeaker from the receiving transducer must be greater than the maximum airway penetration depth of interest; this ensures that secondary reflections from the speaker arrive at the receiving transducer only after data acquisition has been completed. As a result of this distance constraint, imaging instruments for airway imaging previously described in the literature are 1 to 2 meters or more in length (Brooks et al., Reproducibility and Accuracy of Airway Area by Acoustic Reflection, J. Appl. Physiol.: Respirat. Environ. Exercise Physiol. 57(3): 777–787, 1984; D'Urzo et al., Effect of CO_2 Concentrations on Acoustic Inferences of Airway Area, J. Appl. Physiol. 60:398–401, 1986); and some are as long as 5 meters (Fredberg J. J. et al., Airway Area From Acoustic Reflections Measured at the Mouth, J. Appl. Physiol.: Respirat. Environ. Exercise. Physiol. 48(5): 749–758, 1980).

A two-transducer approach is described in a paper of M. R. Schroeder entitled "Determination of the Geometry of the Human Vocal Tract by Acoustic Measurements" in J. Acoust. Soc Am. 41(4), 1002–10 (1967). However, as with the single-microphone approach, Schroeder's two-microphone method was never embodied successfully into a small, compact, hand holdable light-weight working apparatus and in fact never achieved airway reconstructions from human or animal airways.

The present invention is based upon a new two-transducer method and a new associated theory that permits practical application of airway reconstructions by acoustic reflections. Because this theory explicitly incorporates reverberation within the wave tube and does not demand non-overlapping time windows of incident and reflected waves, it removes the distance constraint described above, permitting placement of the loudspeaker or launching transducer close to the receiving transducers.

As such, the new theory allows fabrication of a practical miniature apparatus whose overall length is only a few centimeters rather than meters. The apparatus can image the respiratory tract of mammalian subjects, including the nasal oral and pulmonary cavities.

SUMMARY OF THE INVENTION

In an assembly for acoustically imaging the internal morphology of portions of the respiratory tract of a mammal, including a human, the improvement which comprises a light-weight, easy to manipulate, hand-held acoustic imaging head which is rugged and entirely hand supportable and operable by an operator, throughout an imaging procedure, which head comprises;

A. a rugged hand-holdable housing having

1. an elongate body, defined by
   (a) a top end;
   (b) a base end;
   (c) an outer wall extending between the top end and the base end; and
   (d) an internal chamber;
2. an aperture through the housing top end, providing fluid communication between the internal chamber and the outside of the housing; and
3. a shape and configuration of the outer wall facilitating gripping of the housing with a human hand;

B. an acoustic pipe for transmitting acoustical energy and receiving the reflected acoustical energy, mounted in the aperture, said pipe having a first end within the chamber and an open second end outside of the housing, said second end of the acoustic pipe being adapted for connection of the acoustic pipe to an orifice leading into the respiratory tract;

C. a launching transducer mounted in the chamber and coupled to the first end of the acoustic tube, for launching acoustical energy into the acoustic pipe, propagating an incident wave out of the open second end;

D. at least one acoustic pressure wave sensing transducer mounted on the acoustic pipe at a location between the first and second ends of the acoustic pipe, for sensing reflections of the incident wave, received back in the acoustic tube through the open second end and generating a signal; and

E. means at least partially within the chamber, connected to the acoustic wave sensing transducer, for transmission of signals transduced, to processor means for processing said signals into a processor output signal characteristic of the morphology of a site within the mammal's respiratory tract.

The invention provides signals representative of airway morphology in apparatus that is relatively small and por-

table. The invention may be used for diagnostic and screening purposes in a confined area such as a laboratory, a doctor's office, a place of work, and at bedside.

BRIEF DESCRIPTION OF THE DRAWINGS

FIG. 1 is a cross-sectional side elevation of a preferred embodiment head of the invention.

FIG. 2 is a combined block-pictorial diagram illustrating operation of the head shown in FIG. 1.

FIG. 3 is a fragmentary view of the outside wall of the housing for the embodiment head of the invention of FIG. 1, showing a representative control panel.

FIG. 4 is an electrical wiring diagram for he embodiment head shown in FIG. 1.

FIG. 5 is a partially fragmented sideview of a disposable nasal coupling device of the invention used in conjunction with the head of FIG. 1.

FIG. 6 is a view from above of the coupling device shown in FIG. 5.

FIG. 7 is an alternative shape for the coupling opening in the device of FIG. 5.

DETAILED DESCRIPTION OF THE PREFERRED EMBODIMENTS OF THE INVENTION

Those skilled in the art will gain an appreciation of the invention from a reading of the following description of the preferred embodiments when viewed with the accompanying drawings of FIGS. 1–7, inclusive.

Referring first to FIG. 1, a cross-sectional side elevation, there is seen a preferred embodiment acoustic imaging head **10** of the invention for imaging the internal morphology of portions of the respiratory tract of a mammal, **20** including a human. Head **10** comprises a hand-holdable housing **12** having an elongate body **14** defined by a top end **16** and a base end **18** which presents a planar surface **19** for standing the head **10** on a flat surface in an upright position. The housing **12** presents an outer wall **20** extending between ends **16**, **18** and defining an internal, closed chamber **22**. Wall **20** advantageously includes integrally molded finger holds **24** and a palm grasping indentation **26**. The outside surface of wall **20** may be a frictional surface to facilitate holding and operating the head **10** by a single human hand. The overall weight of head **10** will be such that it is light and easy to operate and manipulate. The head **10** is fully supportable by hand-holding by the operator. An aperture **28** pierces end **16** of the housing **12**. The aperture **28** has mounted therein end **34** of an acoustic pipe **30** having a closed first end **32** within chamber **22** and an open end **34** outside of the housing **12**. The end **34** of acoustic pipe **30** includes a rib **36** encircling the circumference of end **34**, which functions as a means for coupling to the acoustic pipe **30** an adaptor in the form of coupling device **80** for mating with an orifice of the mammal respiratory tract for imaging. The acoustic pipe **30** substantially traverses chamber **22** and its dimensions dictate the overall dimensions of the housing **12**. For example, the acoustic pipe **30** is advantageously about 2.0 to 4.0 cm, preferably about 1.2 cm in diameter and has a length of between about 5 to about 40 cm, most preferably 5 to 20 cm. The end **32** of pipe **30** is closed by mounting thereon a loudspeaker or launching transducer **38** which, upon energization, will launch acoustic energy into the interior of acoustic pipe **30**, propagating an incident sonic wave towards open end **34** of pipe **30** and outside the end **34**. When the head **10** is coupled to an orifice in the respiratory tract for imaging through coupling device **80**, the propagated sound wave will enter the respiratory tract, strike anatomical features in the tract and be reflected back through end **34** into the interior of acoustic pipe **30** to form a transient wave field within the pipe **30**. This wave field is representative of the morphology of the respiratory tract. Two spaced apart pressure transducers **40**, **42** (such as Endevco series **8510** B microphones) are mounted on the acoustic pipe **30** with their pressure sensor flush with the inner walls of acoustic pipe **30** in order to reduce parasitic acoustic reflections. The transducers **40**, **42** are advantageously separated from each other a distance of from about 1.0 to about 15 cm. and both are separated from the end **34** of acoustic pipe **30** by at least about 2.0 cm. When the head **10** is to be used only for the imaging of relatively shallow cavities, i.e.; interior respiratory tract cavities which are to be imaged and which are close to the transducer (at most about 2 to 3 cm., such as the nasal vestibule, only one of the transducers **40**, **42** need be present or active. However, when only one of the transducers **40**, **42** is employed to sense reflected acoustical waves it is necessary to calibrate the head **10** for each imaging as will be described more fully below. The launching transducer **38** is energized to transmit a one-dimensional, essentially lossless acoustic wave into the acoustic pipe **30** by an electrical signal transmitted via conductor **48** which may terminate externally in a plug-type connector **50** mounted on the housing **12** wall **14** and in an amplifier **52** which will be described more fully hereafter. The transducers **40**, **42** are each electrically connected by separate electrical conductors **54**, **56**, respectively, which also can terminate in plug-type connectors **58**, **59** mounted on the housing **12** wall **14**. The connectors **58**, **59** can be used for connection to signal processing means external of head **10**, as will be discussed more fully hereinafter.

In one embodiment head **10** of the invention, the connectors **50**, **58**, **59** are connectable through a communications cable to a signal processor, including a host computer (not shown in FIG. 1) which is remote from the head **10**. In this embodiment, the mode of the operation will be described with reference to FIG. 2 as follows. FIG. 2 is a combined block-pictorial diagram illustrating the operation of an imaging system using the head **10** of the invention.

Referring to FIG. 2, a simplified assembly includes as the launching transducer **38** a loudspeaker such as model MDR 434. Acoustic pipe **30** is of length L. First receiving transducer **40** is located at x=o where x is the axial position along pipe **30**, second receiving transducer **42** is located at x=L, adjacent the airway (e.g. an oral, nasal, or pulmonary airway) of a subject mammal. Transducer **38** launches a one-dimensional essentially lossless acoustic wave into pipe **30**, towards x=L. The launched incident wave travels through pipe **30** and into the airway. A reflected wave, or echo, representative of gradients in the acoustic impedance in the airway then propagates back into pipe **30** towards launching transducer **38**. Receiving transducers **40** and **42** individually and together sense the pressure waves associated with the echo and provide transduced electrical signals representative of the incident and reflected waves for processing by microcomputer **60**.

Microcomputer **60** generates a digital probe signal converted to an analog signal by D/A converter **62**, and amplified by amplifier **52** to drive launching transducer **38** and launch the incident probe acoustic wave. The transduced outputs from receiving transducers **40** and **42** are band-pass filtered by preamplifier **66** and then converted by A/D convertor **68** into digital signals. Microcomputer **60** stores these digital signals in its RAM capability.

Microcomputer **60** processes the stored digital signals to provide an output signal A(x), i.e., a one-dimensional image of the cross-sectional area of the airway as a function of axial position, x, along the airway. Computer **60** preferably processes these signals in accordance with the Ware-Aki algorithm ("Continuous and Discrete Inverse Scattering Problems in a Stratified Elastic Medium. I. Plane Waves at Normal Incidence", J. Acoust. Soc. Am., 54, 4, 911–921, 1969) to provide the area distance function, A(x), from the impulse response of the airway, h(t). The relationship between the pressure field and h(t) may be derived as follows. The pressure field within the tube in the domain $0 \leqq x \geqq L$ can be described as the superposition of two one-dimensional waves propagating with the same wave speed but in opposite directions as given by

$$p(x,t)=p_r(x,t)+p_l(x,t) \tag{1}$$

where t is time, p_r is the incident wave propagating to the right (i.e., from x=o towards x=L), and p_l is the reflected wave propagating to the left (i.e., from x=L towards x=o).

The pressure conditions at x=o and x=L are given by

$$p_l(L,t)=p_r(L,t)*h(t) \tag{2}$$

and

$$p_r(O,t)=p_l(O,t)*s(t) \tag{3}$$

where s (t) is the impulse response of the loudspeaker and * denotes the convolution operation. Given that a one-way propagation delay is $\tau=L/v$ where v is the velocity of sound, the following relationships exist:

$$p_l(O,t)=p_l(L,t-r) \tag{4}$$

$$p_r(L,t)=p_r(o,t-r). \tag{5}$$

Equations (1) through (5) may be combined by mathematical techniques well-known in the art (e.g., the Fourier transform, and algebra) to yield

$$h(t)*\{p(O,t)-p(L,t-\tau)\}=p(L,t+\tau)-p(o,t) \tag{6}$$

and

$$h(t)*s(t)=\delta(t-2r). \tag{7}$$

Equation (7) indicates that both waves propagate with an equal, non-zero delay. In equation (7), the symbol δ denotes the well-known impulse function which is sometimes called the delta function. Equation (6) identifies the relationship between the pressure field and h(t). Equation (6) may be discretized by the Riemann sum approximation to yield

$$h(n\Delta t)=\{1/p(o,o)\}\{p(L,(m+n)\Delta t)-p(o,n\Delta t)\}-k=n \tag{8}$$

$$\{\Sigma h((n-k)\Delta t)/p(o,o)\}\{p(o,k\Delta t)-p(L,(k-m)\Delta t)\}k=1$$

where Δt is the sampling duration of the time discretization, n is the set of integers 1,2,3, etc., m is an integer such that $\tau=m\Delta t$, p(o,o) denotes the first non-zero pressure value at x=o, k is the index of the summation, and the lower and upper limits of summation are, respectively, k=1 and k=n.

In brief summary, microcomputer **60** processes the stored digital data signals representative of the transduced signals from the spaced-transducers **40**,**42** to provide a signal representative of the impulse response of the airway, h(t), according to equation (8). Microcomputer **60** then processes the signal h(t) in accordance with the Ware-Aki algorithm to provide a signal, A(x), representative of the morphology of the airway. The signal A(X) can then be stored in the storage capability of microcomputer **60** for future call-up when comparisons are desired, to subsequent images.

The wave propagation in pipe **30** may be assumed lossless. The early portions of the transduced pressures at x=o and x=L are then identical except for the propagation delay t. Microcomputer **60** may determine the propagation delay by minimizing mean square differences between the transduced signals in the early part of their respective transients. The relative gain of the transducers may be determined in a similar manner. To obtain sufficient time resolution, microcomputer **60** preferably interpolates the transduced signals to achieve an effective sampling period of 0.75 μs (i.e., Δt=o0.75 μs).

Equation (8) requires preferably the propagation delay to be an integral multiple of the sampling period t, i.e. $\tau=m\Delta t$. Microcomputer **60** preferably interpolates and resamples digitized transduced signals such that the propagation delay corresponds to 24 time steps, i.e., $\tau=24\Delta t$. This value of the propagation delay corresponds to a spatial step increment of about 0.2 cm.

In providing h(Δt) in accordance with the equation (8), the first non-zero pressure value p(o,o) is preferably larger than some minimal threshold value to maintain stability. The pressure values occurring before this first threshold pressure are initially neglected to obtain a first approximation of h(t). To deemphasize errors that may be introduced by the threshold it is advantageous to provide a corrected h(Δt) characterized by increased stability and accuracy by convolving the first approximation of h(t) with the digitized pressure values occurring prior to the first non-zero pressure (i.e., the pressure values that were initially neglected). Microcomputer **60** then preferably bandpasses the discrete values sequence h(nΔt) that represents the impulse response of the airway h(t) with a digital, linear-phase, finite impulse response (FIR) filter having a passband from 0.01 kHz to 9 kHz to attenuate physiologic noise associated with airway wall non-rigidity, instability of the impulse response, h(Δt), and artifacts associated with acoustic cross-modes.

Microcomputer **60** then processes the corrected h(Δt) signal in accordance with the Ware-Aki algorithm to provide an output signal representative of the area-distance function, A(x), of the airway graphically represented.

The microcomputer **60** (such as Compuadd model 320 with an Intel 80386 microprocessor operating at 20 MHz) is coupled to a converter module having a 12-bit analog-to-digital (A/D) converter **68** with a sampling period typically of 24.0 μs and a 12 bit digital-to-analog (D/A) converter **62** coupled to pre-amplifier **66** typically with a band-pass filter having a passband from 0.1 kHz to 10.0 kHz (such as Tektronix model AM 502) that is coupled to transducers **40** and **42**. D/A converter **62** is coupled to transducer **38** through amplifier **52**.

As mentioned above, when the head **10** of the invention is to be used for imaging relatively shallow body cavities near the orifice for coupling to the head **10**, for example, the nasal vestibule to a depth of about 1 to 3 cm., one can use a head **10** where only one of the transducers **40**, **42** is present or active. In this case, the relationship between the pressure field and h(t) may be derived as described in the U.S. Pat. No. 4,326,416 which is incorporated herein by reference thereto. As also mentioned above, with only one operative receiving or sensing transducer, it is necessary to calibrate the instrument. This calibration procedure is also described

fully in the U.S. Pat. No. 4,326,416. An advantage of the preferred two transducer (microphone) apparatus of the invention is the dispensation with of the calibration procedure requirement.

The microcomputer **60** may also be coupled electronically to the input terminals of a display module (not shown in FIG. **1** or **2**) for visual display of processed signals from the transducers **40**, **42**. Alternatively or in addition, the processed signals can be input to a conventional printer for a printed record of the imaging results. Simultaneous visual display of processed signals is advantageous to the operator and permits the operator to practice a preferred method of operation. It will be appreciated by those skilled in the art that a hand operated device for use in imaging, for example, the nasal passages of a mammal requires a steady operator's hand and patient-subject to obtain consistently good and reproducible signal data. Slight inopportune movement on the part of the operator or patient can generate faulty data. The operator with experience can see on a visual display, inconsistent signals and periods of time when a series of incident waves propagated by the head are reflected, sensed and processed as consistent signals representative of the desired image. The operator in fact may have to manipulate the head **10** into certain positions in order to obtain consistent and reproducible signals (for example when a good coupling seal is difficult to achieve between the orifice and head **10**). To overcome this problem, the head **10** is advantageously used in a "pre-trigger" mode to sort out good signals from faulty signals, i.e.; inconsistent signals. This is done by use of a "circular buffer" whereby the microprocessor **60** is programmed to only store in the RAM the last **10** of **10** plus X signals received from A/D converter **68** (first in, first out). These last **10** signals can represent a collection time period of about 2 seconds. When the operator views the signals processed and put out by the microprocessor **60**, as consistent, the operator can stop acquisition of new signals to maintain the last **10** consistent signals in the microprocessor memory for storage and future call-up. In this way, the useful signals are stored for later recall.

In a most preferred embodiment head **10** of the invention, electrical power and/or communication cables between the head **10** and the signal processing components of the imaging system described above are eliminated. The imaging system will then be self-contained in the single hand-held device of the invention. Referring again to FIG. **1**, miniature signal processing means **100** is mounted in the chamber **22** and includes the pre-amplifier **66**, converter D/A **62** and converter A/D **68** with microcomputer **60**. Integration of the computer circuitry into from one to three chips enables this miniaturization. A rechargeable battery **102** such as an AAA size battery is advantageously mounted in chamber **22** proximal to the housing base end **18** and includes a socket **104** for electrical recharge by connection to AC wall outlet sources. The battery pack **102** is electrically connected to the processing means **100** and the launching transducer **38**, as a power source, controlled by switch circuitry described below (wiring not shown in FIG. **1**; see FIG. **4**). The connectors **101**, **103** are for connection of means **100** to a visual display monitor for observation and/or to a printer for obtaining a printed record of the processed signals.

Referring to FIG. **3**, a portion of the outside of housing **12** wall **14** is shown, with a control **108** for energization and operation of the head **10**, located in one of the fingerholds **24** to facilitate one-handed operation of head **10**. For the sake of brevity, a switch **109** is located in an adjacent fingerhold **24**, which may be used to control such functions as START ACQUISITION OF DATA; STOP ACQUISITION OF DATA; DISPLAY DATA; SELECT DATA FOR DISPLAY; STORE DATA; RECALL DATA FOR DISPLAY; COMPARE NEW DATA TO RECALLED DATA, etc. Any and all of these functions (and others) can be controlled by finger-operated switches. The electrical wiring necessary for these control functions are not shown in FIG. **1**, for clarity of the drawing, but will be conventional and realized by those skilled in the art of electrical wiring.

FIG. **4** is a wiring diagram for the preferred embodiment head **10** described above, which is completely self-contained.

Referring to FIG. **5** there is shown in a partially fragmented side view, a sterilizible, disposable nasal coupling device **80** having an input end **82** that attaches to the output end of pipe **30** and an output end **84** for insertion into a nostril. Channel **85** on the inside wall of coupling device **80** mates with and receives the rib **36** on end **34** of tube **30**, for secure, removable attachment. Channel **85** and rib **36** cooperate to provide a means for attaching the acoustic pipe **30** end **34** to the coupling device **80**. Other means of attachment will be apparent to those skilled in the art, such as the so-called "bayonet mount", screws, frictional fits, male-female connectors and the like. Nasal coupling device **80** may have output ends **84** of different sizes for snug sealing engagement with the inside of nostrils of different sizes. Its internal area contour is such that impedance matching between subject and apparatus is maintained with maximum acoustic energy transmission.

FIG. **6** is a top view of the coupling device **80** shown in FIG. **5** and shows that the rim or edge **94** of end **84** may be relatively thin, i.e.; on the order of about 0.5 to about 1.5 mm in uniform thickness for a distance of about 10 mm from the edge **94** toward end **82** to facilitate a comfortable fit within the nostril and to allow trimming circa 10 mm off the length of the device **80**. The wall **87** thickness below the 10 mm distance from the edge **94** may be increased towards end **82**, where more structural stability and less flexibility is desired. The wall **87** of the oval shaped device **80** (as seen from above in FIG. **6**) tapers from end **82** inwardly to end **84**, on an inward slope of about 10° to 15° from the perpendicular. Similarly, there may be disposable coupling devices with output ends **84** of different sizes for snugly coupling to other airway orifices of different sizes, including the mouth.

The preferred coupling device **80** may be fabricated from a wide variety of materials, both flexible, and inflexible in character. Representative of such materials are a wide range of synthetic and natural polymeric resins, preferably having properties which do not inhibit passage of acoustic waves through the device **80** from and to the pipe **30**. Thus, the device **80** is advantageously fabricated from polycarbonate resins, polyvinyl chloride, polyvinyl alcohol, ABS resins, polystyrene, polyurethane, polytetrafluoroethylene, natural rubber and like resins. A preferred material is a flexible polysilicone rubber, for sealing engagement with an orifice to be used. Indicia such as line **86** can be placed on the device **80** to indicate the depth of desired insertion into the nostril which is preferably 2 to 3 mm penetration at most. This is advantageous to insure accurate imaging. Also, scribe marks **88** can be placed on the device **80**, indicating where the device **80** can be cut to trim it for a larger sized nostril. A vertical rib or mark on the axial line of device **80** may be placed on the outside body of device **80** as a reference mark or indicia to facilitate placing the device **80** in position on a patient's nose, removing it and replacing it in the same position for subsequent imaging. Note that the device **80** can also be fitted internally with a filter **90** which does not inhibit passage of sound waves, but will stop passage of fluids such as mucous.

The opening of device **80** at end **84** as shown in FIG. **6** is round (oval) as defined by the wall **87**. The shape of the opening may be circular, of any shape including perfectly round, oblong or shaped like a race-track having a greater dimension in one direction. FIG. **7** shows a preferred circular shape for the opening of a device **80** at end **84**. The geometry of the end **84** of device **80** preferably matches the geometry of the orifice to be coupled without any substantial distortion of the nasal vestibule.

The invention is not to be limited to the description of the preferred embodiment described above, but include within the spirit and scope of the invention other embodiments.

For example, pipe **30** (FIG. **1**) could be 1.2 cm in diameter and 10 cm in length. In this case, the two transducers are preferably separated by 3.0 cm but transducer **18** is still located 2.0 cm from the airway opening. With the 10 cm length tube, the propagation delay, τ, is made to correspond to seven time steps, i.e.; $\tau=7\Delta t$. This value of the propagation delay corresponds to a spatial step increment of about 0.2 cm.

Also, an algorithm other than the Ware-Aki algorithm could be used to uniquely determine the area-distance function A(x), of the airway from h(t). Also, algorithms other than the equation (8) above can be used to determine h(t) from the pressure field.

What is claimed:

1. A coupler for coupling a head assembly of an acoustic imaging device to the orifice leading to the respiratory tract of a mammal for acoustic imaging, which head assembly comprises;

A. a rugged hand-holdable housing having
   1. an elongate body, defined by
      (a) a top end;
      (b) a base end;
      (c) an outer wall extending between the top end and the base end; and
      (d) an internal chamber;
   2. an aperture through the housing top end, providing fluid communication between the internal chamber and the outside of the housing; and
   3. a shape and configuration of the outer wall facilitating gripping of the housing with a human hand

B. an acoustic pipe for transmitting acoustical energy and receiving the reflected acoustical energy, mounted in the aperture said pipe having a first end within the chamber and an open second end outside of the housing, said second end of the acoustic pipe being adapted for connection of the acoustic pipe to an orifice leading into the respiratory tract;

C. a lauching transducer mounted in the chamber and coupled to the first end of the acoustic tube, for launching acoustical energy into the acoustic pipe, propagating and incident wave out of the open second end;

D. at least one acoustic pressure wave sensing transducer mounted on the acoustic pipe at a location between the first and second ends of the acoustic pipe for sensing reflections of the incident wave, received back in the acoustic tube through the open second end and generating a signal; and

E. means at least partially within the chamber, connected to the acoustic wave sensing transducer, to processor means for processing said echo signals into an acoustic image signal characteristic of the morphology of a site within the mammal's respiratory tract said coupler comprising:
   (a) a tube having a first end adapted by size and configuration to sealingly mate with said orifice;
   (b) a second end adapted by size and configuration to be mounted on the acoustic pipe of the head assembly;
   (c) a tube body extending between the first and second ends of the tube, said body having an internal contour such that impedance matching between the head assembly and the mammal is maintained with maximum acoustic energy transmission; said head assembly comprising an assembly for acoustically imaging portions of the internal morphology of the respiratory tract of a mammal, including a human, which comprises a lightweight, easy to manipulate, hand-held acoustic imaging head which is rugged and entirely hand supportable and operable by an operator, throughout an imaging procedure.

2. The coupler of claim 1 wherein the body tapers inwardly from the second end to the first end at an angle of about 10° to 15° from the perpendicular.

3. The coupler of claim 1 wherein the first end is adapted to seal with the nostril opening of said mammal.

4. The coupler of claim 1 wherein the tube body is fabricated from a flexible material.

5. The coupler of claim 4 wherein said material is a polysiloxane rubber.

6. The coupler of claim 1 wherein the thickness of the body is greater proximal to the second end than the thickness proximal to the first end.

7. The coupler of claim 1 wherein the first end is circular.

8. The coupler of claim 1 which may be trimmed proximal to the first end to obtain a larger size opening at the first end.

9. The coupler of claim 1 which is disposable.

* * * * *

UNITED STATES PATENT AND TRADEMARK OFFICE

CERTIFICATE OF CORRECTION

PATENT NO. : 5,746,699

DATED : May 5, 1998

INVENTOR(S) : Jeffrey Fredberg, Gary Glass, John Lehr and Bruno Louis

It is certified that error appears in the above-indentified patent and that said Letters Patent is hereby corrected as shown below:

Col. 3, line 35; delete -- 20 -- .

Col. 6, line 17; " Δ t=oO.75 μs) should read

-- Δ t =o .75 μs) -- .

Col. 10, line 12; after "transducer" insert

-- for transmission of echo

signals transduced, -- .

Signed and Sealed this

Thirteenth Day of October 1998

Attest:

Bruce Lehman

BRUCE LEHMAN

Attesting Officer

Commissioner of Patents and Trademarks