US 20090240125A1

(19) United States

(12) Patent Application Publication

Such et al.

(10) Pub. No.: US 2009/0240125 A1

(43) Pub. Date: Sep. 24, 2009

(54) INTEGRATED PULSE OXIMETRY SENSOR

(75) Inventors: **Olaf Such**, Aachen (DE); **Josef Lauter**, Geilenkirchen (DE); **Robert Pinter**, Aachen (DE); **Jens Mühlsteff**, Aachen (DE)

Correspondence Address:
PHILIPS INTELLECTUAL PROPERTY & STANDARDS
P. O. Box 3001
BRIARCLIFF MANOR, NY 10510 (US)

(73) Assignee: **KONINKLIJKE PHILIPS ELECTRONICS N.V.**, Eindhoven (NL)

(21) Appl. No.: **11/720,887**

(22) PCT Filed: **Dec. 5, 2005**

(86) PCT No.: **PCT/IB05/54065**

§ 371 (c)(1), (2), (4) Date: **Jun. 5, 2007**

Related U.S. Application Data

(60) Provisional application No. 60/635,985, filed on Dec. 14, 2004.

Publication Classification

(51) **Int. Cl.**
A61B 5/00 (2006.01)

(52) **U.S. Cl.** **600/323**

(57) **ABSTRACT**

In a medical pulse oximetry sensor (**10**) at least two light emitting diodes (**16**, **18**) are disposed to emit red light and infrared light through a portion of a subject's anatomy with a typically high oxygenated blood throughput. Typically, this area is also relatively narrow, to allow the light to pass through the area with acceptable attenuation, such as a finger or an earlobe. Light emitted from the LEDs (**16**, **18**) is incumbent upon an integrated circuit (**22**) printed from a single CMOS substrate (**21**). The integrated circuit (**22**) includes all preprocessing and post-processing elements needed to convert the detected light signals into a pulse oximetry measurement. These elements include a photodetector (**20**), a photo pre-amplifier (**40**), a sampler/holder (**42**), an analog to digital converter (**44**), a microprocessor (**46**) a rangefinder (**48**), a timing control circuit (**50**) and an LED control circuit (**52**). By integrating all pre and post processing functions into the carriage housing (**12**), the system becomes more efficient, less expensive to manufacture, and more robust to ambient light and x-ray radiation.

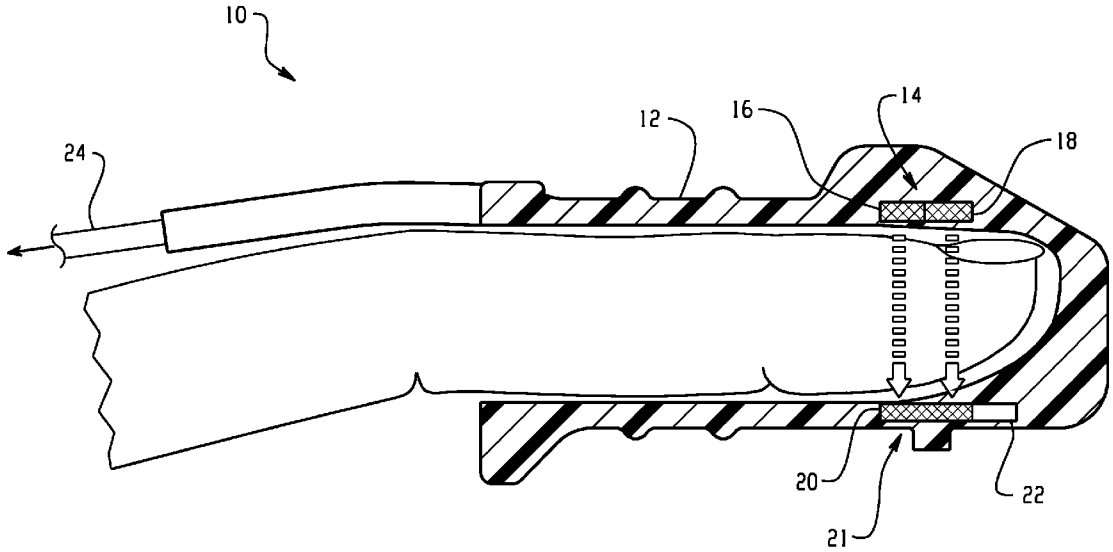

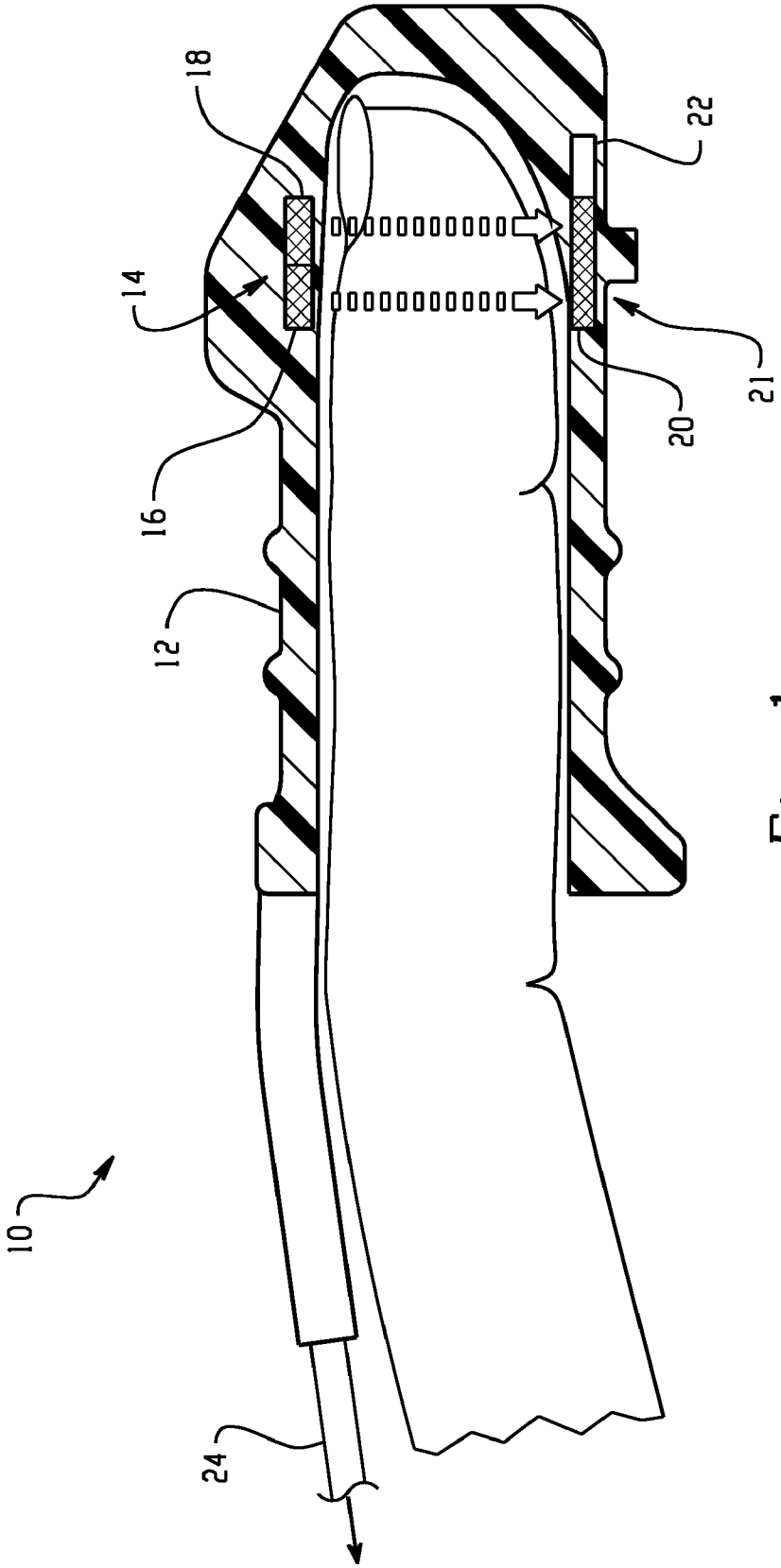

Fig. 1

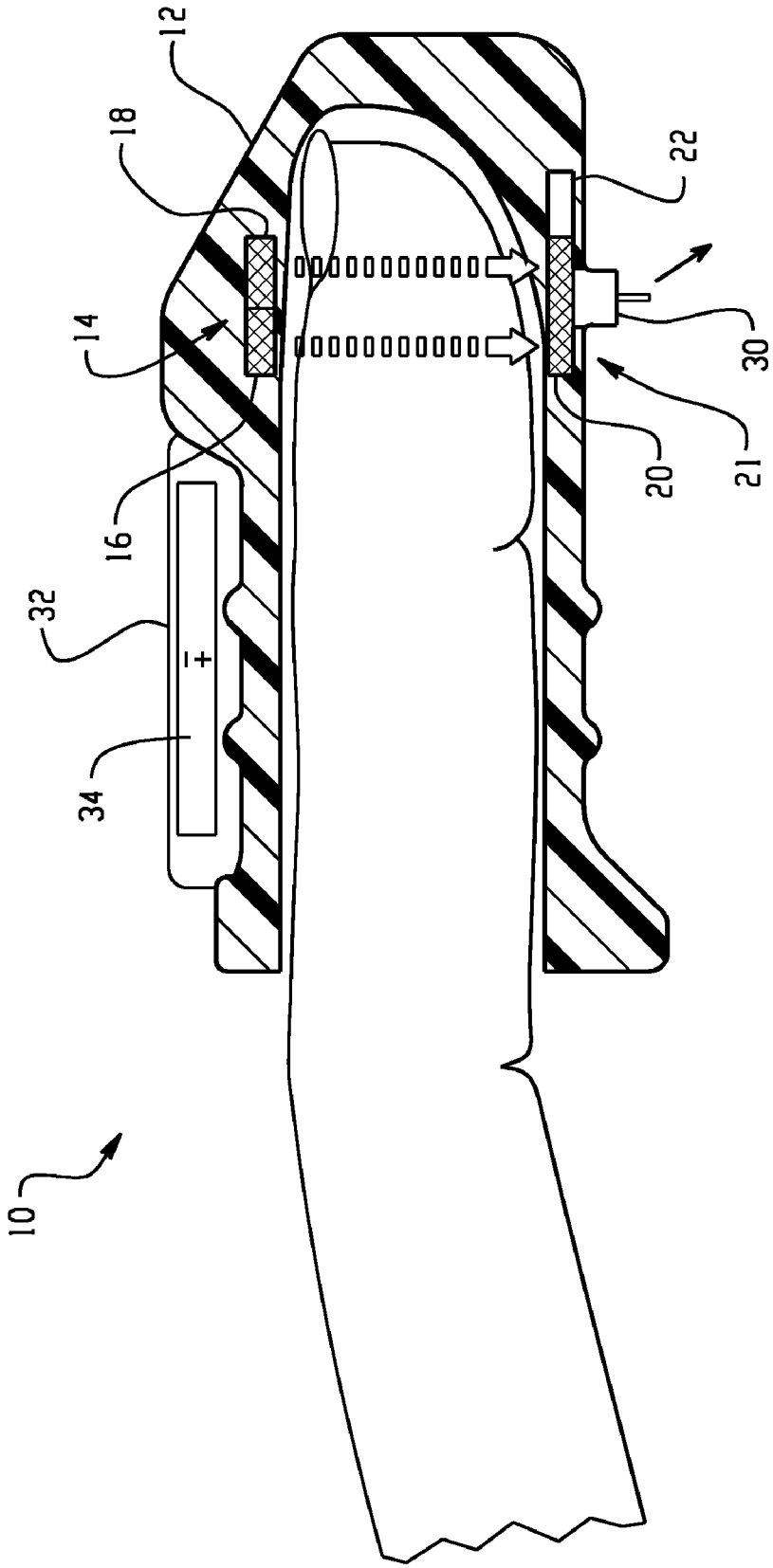

Fig. 2

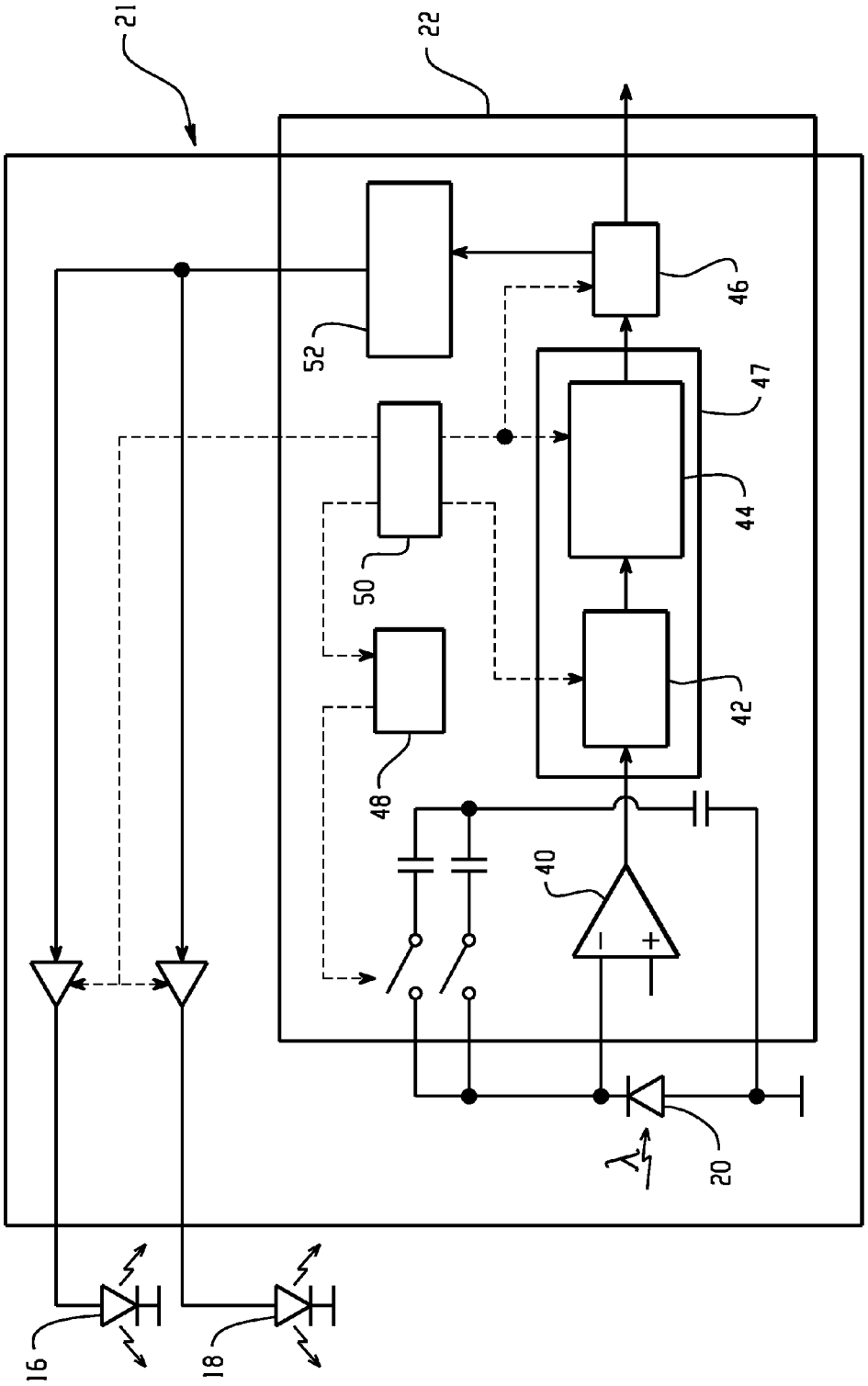

Fig. 3

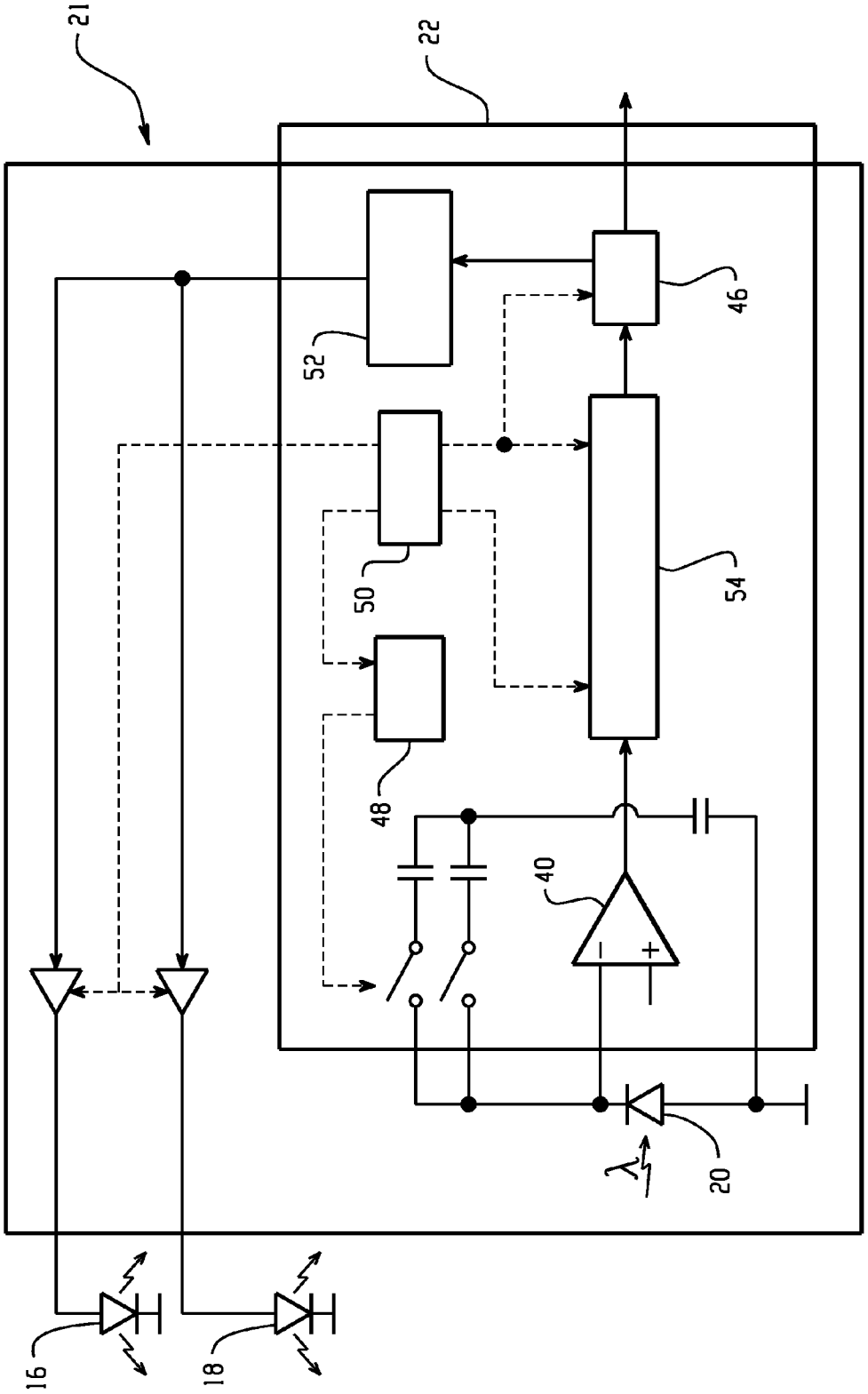

Fig. 4

INTEGRATED PULSE OXIMETRY SENSOR

[0001] The present invention relates to measurement of patient pulse oximetry, that is, the measure of the amount of Oxygen in a patient's blood.

[0002] SpO_2, an abbreviation used for pulse oximetry, is a method that is widely accepted in the medical world to measure the content of oxygen in the arterial blood by means of light. Typically, SpO_2 sensors include light emitting diodes (LEDs) that shine red and infrared light through the tissue. Most sensors are used at relatively narrow extremities, such as a finger, toe, or ear. The blood bone and tissue at the measurement site absorb much of the incident light, but sufficient light traverses the tissue to be useful for measurement. Typically, a light sensitive detector such as a photodiode opposite the source receives the light that passes through the extremity.

[0003] The sensor measures the amount of red and infrared light received by the detector and calculates the amount of each wavelength absorbed. The amounts of light absorbed by tissue, bone, and venous blood do not change dramatically over short periods of time. The amount of arterial blood does change over short periods of time due to natural pulsation of the extremity, but because it is the only variable that is changing over short periods of time, it can be isolated from the other components.

[0004] The amount of light received by the detector indicates the amount of oxygen bound to hemoglobin in the blood. Oxygenated hemoglobin (HbO_2) absorbs more infrared light than red light. Deoxygenated hemoglobin (Hb) absorbs more red light than infrared light. By comparing the amounts of red and infrared light received, the instrument can calculate the SpO_2 reading of the blood.

[0005] Due to the amount of surrounding ambient light sources that overlay the useful signal, it is necessary to modulate and demodulate the light from the two LEDs. Currently, a standard pulse oximetry sensor includes a passive photodiode packaged into a finger clip or similar housing together with the LEDs. The modulation/demodulation of the light source and the amplification filtering and processing of the signal is then typically done on a printed circuit board remote from the actual sensor, typically with a relatively long, high impedance cable connecting the systems.

[0006] Multiple disadvantages are inherent with such a system. Typical current designs are costly, consume significant power, and are relatively bulky. Current picosat boards typically in use consume 200 mW of power and the board alone has a volume of 30 cm and costs about $110 without the sensor. Wireless use is impracticable for both power consumption reasons and size/weight reasons. Further, the cost makes it impracticable for personal health care type products.

[0007] In addition to size/cost restraints, the separation of the amplifier and photodiode forces the system to run a small photocurrent through the high impedance long cable to the preamplifier. This setup complicates the matter due to shielding requirements and crosstalk issues.

[0008] The present application contemplates a new and improved pulse oximetry monitoring system for use in conjunction with units capable of both wired and wireless communication, which overcomes the above-referenced problems of size, cost, and outsourcing issues, and others.

[0009] In accordance with one aspect of the present invention, a medical pulse oximetry sensor is provided. A carriage housing houses first and second light emitting diodes, one emitting light in the red spectrum, and the other emitting light in the infrared spectrum. A photodiode detects incumbent light from the first and second light emitting diodes after the emitted light has passed through a blood oxygenated portion of a subject. Electrical signals are generated. A processing circuit integrally formed on an integrated semiconducting component chip mounted in the carriage housing processes the signals into a pulse oximetry value.

[0010] In accordance with another aspect of the present invention, a method of manufacturing a pulse oximetry sensor is provided. At least first and second light emitting diodes are embedded into a carriage housing. An integrated circuit is embedded in the housing opposite the light emitting diodes such that light emitted by the diodes must pass through the portion of the subject's anatomy before impinging upon the integrated circuit. The integrated circuit includes at least one photodiode for detection of light signals from the at least two light emitting diodes and generating signals indicative thereof. The circuit also includes an amplifier for amplifying the signals from the photodiode. The circuit includes digital conversion elements for digitizing the signals from the photodiode. Also the circuit includes a processing unit for processing the digital signals into the pulse oximetry value.

[0011] In accordance with another aspect of the present invention, a method of measuring blood oxygen is provided. Pulses of red light are emitted from a first LED mounted in a carriage housing adapted to fit snugly about a portion of a subject's anatomy with a relatively high oxygenated blood throughput. Pulses of infrared light are emitted from a second LED also mounted in the carriage housing. Light from the LEDs is received which has traversed a blood oxygenated portion of a person with a photodiode mounted in the carriage housing. The photodiode generates electrical signals. The signals are processed into a blood oximetry value with a processing circuit integrally formed on a semiconductor chip that is mounted in the carriage housing.

[0012] One advantage of the present invention resides in its small size.

[0013] Another advantage resides in the close proximity of detection elements and signal conditioning, which gives better noise performance and eliminates expensive wiring.

[0014] Another advantage resides in the separation of special functions in different semiconductor processes which leads to top overall performance for all parts of the system.

[0015] Another advantage resides in independent testability of all subsystems of the sensor.

[0016] Another advantage resides in smaller and more specialized subsystems that can be produced with a higher yield.

[0017] Another advantage resides in increased automation in processing.

[0018] Another advantage resides in low cost.

[0019] Another advantage resides in significant reduction in direct weight of the sensor.

[0020] Another advantage resides in reduced power consumption.

[0021] Still further advantages and benefits of the present invention will become apparent to those of ordinary skill in the art upon reading and understanding the following detailed description of the preferred embodiments.

[0022] The invention may take form in various components and arrangements of components, and in various steps and arrangements of steps. The drawings are only for purposes of

illustrating the preferred embodiments and are not to be construed as limiting the invention.

[0023] FIG. **1** is an illustration of a preferred implementation of a wired medical pulse oximetry sensor with integrated processing in the finger unit;

[0024] FIG. **2** is an illustration of a preferred implementation of a wireless embodiment of the medical pulse oximetry sensor of FIG. **1**;

[0025] FIG. **3** is a circuit diagram, of the integrated circuitry of the pulse oximetry sensors of FIGS. **1** and **2**;

[0026] FIG. **4** depicts an alternate embodiment of the circuit shown in FIG. **3**.

[0027] With reference to FIG. **1**, a preferred medical pulse oximetry sensor **10** is illustrated. Typically, the sensor **10** is adapted to fit over the finger of a subject, but it is to be understood that the sensor **10** could be easily adapted to accommodate alternate sites that have relatively good blood oxygenated throughput, and are sufficiently light translucent, such as the toe or the earlobe. The sensor **10** includes a housing **12** which fits snugly around the anatomy in question, so as to keep the sensor **10** from falling off of the anatomy, but not so snug as to prevent circulation of blood therein.

[0028] The preferred sensor includes a light emitting array **14** which in the illustrated embodiment, includes two light emitting diodes **16**, **18**. Diode **16**, when stimulated emits light from the visible red wavelength of the electromagnetic spectrum, and the diode **18**, when stimulated emits light from the infrared portion of the electromagnetic spectrum. It is to be understood that a plurality of additional wavelengths can be used in conjunction with, or in lieu of the two types of light illustrated in FIG. **1**. As many as ten or more different wavelengths could be utilized in a preferred embodiment of the pulse oximetry sensor according to the present application.

[0029] With continuing reference to FIG. **1**, following the arrows from the light emitting diodes **16**, **18** and through the depicted finger, there is a photoreceptor array **20**. This array preferably includes a photodiode capable of being stimulated by at least the red and infrared spectra, but as noted previously, compatibility with many more wavelengths is preferable. Immediately adjacent the photoreceptor array **20**, preferably on a common CMOS chip **21**, resides signal processing electronics **22** of the preferred pulse oximetry sensor **10**. Depicted in FIG. **1** as an extension of the photoreceptor array **20** for the sake of clarity, it is to be understood that the signal processing electronics **22** can be located anywhere adjacent to the photoreceptor array **20**, but is most preferably integrated with the photoreceptor array **20**. The photodiode is preferably integrally formed on the same CMOS chip as the electronic components **22** described in detail below. However, it is contemplated that the photodiode can be formed separately from the CMOS chip **21**, bonded or otherwise electrically connected to it. A data transmission cable **24** is attached to the housing **12** to transport the analyzed pulse oximetry data to a typical means of display or recordation and to provide power to the components of the pulse oximetry sensor. Because the data has been processed, preferably digitized, and amplified, the transmission cable need not be shielded and can be low impedance.

[0030] With reference now to FIG. **2**, a wireless embodiment of the pulse oximetry sensor **10** is depicted. It is to be understood that the functional discussion that applies to FIG. **1** also applies to FIG. **2**, inasmuch as like indicators indicate like components. Most significant differences, of course, are an on-board power supply, a wireless transmitter/receiver, and the lack of a connecting power/data transmission cable. Functionally, the pulse oximetry sensor depicted in FIG. **1** is operationally very similar to the wireless embodiment depicted in FIG. **2**.

[0031] A wireless transmitter **30** transmits the analyzed pulse oximetry data from the CMOS chip **21** to a remote console for viewing. The transmitter is preferably a Bluetooth™ type transmitter because it is a power and processing efficient format and because shorter range transmissions are preferred. The transmitter is relatively short range, preferably transmitting to a console within the subject's room, and not reaching the consoles of similar units in other parts of the medical facility. More powerful and longer range transmitters are also contemplated, such as RF embodiments, where appropriate. Preferably, the transmitter/receiver is a separate chip from the signal processing electronics **22**, as opposed to integrated within the electronics chip **21**. Optionally, the wireless transmitter **30** is a transceiver for receiving post processing and control instructions and the like from a dedicated host system. Such messages or indicators could be battery status monitoring messages, on/off commands, encryption codes, processing instructions, and the like. In the preferred embodiment, the transmitter **30** is located adjacent to the integrated processing electronics **22**, but it is to be understood that the transmitter may be also integrated into the CMOS chip **21** that houses the signal processing electronics **22** or located in a more remote portion of the sensor assembly.

[0032] The wireless embodiment includes an on-board power supply housing **32** wherein is located a power supply, preferably a battery **34**. The battery **34** is preferably a lithium-ion battery. The battery **34** is the most bulky component of the wireless pulse oximetry embodiment, so a balance is desired between battery life and bulk. In a hospital environment, it is conceivable that battery lives of a ½ day or a day are acceptable. Rechargeable batteries could be recharged periodically on convenient in-room battery chargers designed to receive the pulse oximetry sensors that are not in use. If, however, longer battery lives are desired, for such applications as home use or extended hospital stays, larger (such as a AA or AAA cell) are possible. Other power supplies such as solar cells, other charge storage devices, inductive couplings, and the like are also contemplated.

[0033] Now with reference to FIG. **3**, the processing electronics **22** are depicted in greater detail. All of the components are **22** integrated into a single CMOS chip **21**. Integrated design enables significant reduction of size, cost, direct weight of the sensor, reduction of power consumption, and thus further reduction of other components and parameters due to shrinking the power supply. The disclosed embodiment reduces the production cost of an SpO_2 sensor including demodulation, filtering, and pre-processing, LED control and drivers to be comparable with the current cost of the photodiode and finger mounting assembly.

[0034] The first component integrated is the photoreceptor array **20**. As discussed previously, the photoreceptor array receives light data from the red emitting diode **16** and the infrared emitting diode **18**. These signals are immediately amplified by an attached photo preamplifier **40**. With no cable to traverse between the photodiode and the amplifier, amplification is performed before the light signals undergo significant attenuation or acquire significant background noise. The amplified signals are sampled and held by a sample/hold **42** until an iteration of each wavelength has been sampled (two in the preferred embodiment, but as many as is practically

allowable, such as ten as discussed previously) including a reference (dark) channel in which no light is emitted. The dark channel is sampled to provide a reference so that the system can create a baseline and cancel out any ambient light contribution and exclude it from the pulse oximetry measurement. The individual wavelength signals are then separately digitized by an analog to digital converter **44**, and passed to a microprocessor **46** (CPU) of the integrated electronics **22**. Optionally, the sample/hold **42** and the analog to digital converter **44** are combined into a Sigma Delta ($\Sigma\Delta$) converter **47**, combining the holding and digitizing into a single step.

[0035] The flow of samples is filtered digitally by the CPU **46** and adjusted according to intensity based on detected light levels. To aid the CPU **46** in adjusting the intensities of the signals, a dynamic rangefinder **48** is included to compensate for different measurement sites, (e.g. finger vs. earlobe) LED efficiencies, skin color/tone, and the like. Information from the rangefinder **48** is fed back into preamplifier **40** to be used in the next iteration of detected LED emissions.

[0036] A timing circuit **50** coordinates the rangefinder **48**, the lighting of the LEDs **16**, **18**, and the processing and hold of data through the sample **42**, the A/D converter **44** and the CPU **46**. In the preferred embodiment, the timing circuit **50** coordinates alternating bursts from the diodes **16**, **18** and dark channels on the order of 1 KHz iterations, e.g., every millisecond. This value is chosen to be well above the frequency of most ambient light sources (e.g. florescent) and in this manner, may be as small as about 250 Hz. At slower switching speeds, the pauses between light emissions are longer to avoid prematurely burning out the LEDs **16**, **18**. The CPU **46** guided by the timing circuit **50** coordinates with an LED controller **52** for precise lighting of the LEDs **16**, **18**. After receiving iterations of the detected light, the CPU **46** translates the detected light signals into a pulse oximetry measurement. The updated pulse oximetry measurement is then passed on from the CPU **46** to a suitable display via the cable **24**, (as per FIG. **1**) or via the transmitter **30** (as per FIG. **2**).

[0037] In an alternate embodiment, as shown in FIG. **4** the use of a current to voltage converter **54** instead of the sample/hold **42**, ADC **44** combination is contemplated. This alternate embodiment may be used for analog modulation schemes such as frequency or phase multiplexed LED modulation.

[0038] Also alternatively, multiple parallel sample/holds **42** and ADCs **44** can be added to relax requirements on the single ADC **44** processing channel. Analog or hardwired digital filters and demodulation can also be used in this concept.

[0039] Also alternatively, it is contemplated that the red and infrared signals received from the light emitting diodes be converted into plethysmographic waveforms from at least one of the red and infra-red spectra/

[0040] The invention has been described with reference to the preferred embodiments. Modifications and alterations will occur to others upon a reading and understanding of the preceding detailed description. It is intended that the invention be construed as including all such modifications and alterations insofar as they come within the scope of the appended claims or the equivalents thereof.

1. A medical pulse oximetry sensor comprising:

a carriage housing adapted to fit snugly about a portion of a subject's anatomy with a relatively high oxygenated blood throughput;

a first light emitting diode mounted in the housing for emitting light in the electromagnetic spectrum of the red wavelengths;

a second light emitting diode mounted in the housing emitting light in the electromagnetic spectrum of the infrared wavelengths;

at least one photodiode for detecting incumbent light from the first and second light emitting diodes after the emitted light has passed through a blood oxygenated portion of a subject and generating electrical signals indicative thereof;

a processing circuit integrally formed on an integrated semiconducting component chip mounted in the carriage housing, the processing circuit processing the signals into one of a pulse oximetry value and plethysmographic waveforms from at least one of the wavelengths.

2. The medical pulse oximetry sensor as set forth in claim **1**, wherein the processing circuit of the semiconducting chip includes:

an amplifier for amplifying the signals from the at least one photodiode.

3. The medical pulse oximetry sensor as set forth in claim **2** wherein processing circuit of the semiconducting chip includes:

a sigma delta modulator for sampling the amplified signals and converting the signals into digital format.

4. The medical pulse oximetry sensor as set forth in claim **3**, further including:

a current to voltage converter for analog modulation and one of frequency and phase multiplexed LED modulation of the signals from the photodiode.

5. The medical pulse oximetry sensor as set forth in claim **2**, wherein processing circuit of the semiconducting chip includes:

a sample and hold operatively connected to the amplifier for sampling and holding the amplified signals.

6. The medical pulse oximetry sensor as set forth in claim **5**, wherein the processing circuit of the semiconducting chip includes:

an analog to digital converter for digitizing sampled and held amplified signals.

7. The medical pulse oximetry sensor as set forth in claim **6**, wherein the processing circuit of the semiconducting chip includes:

a microprocessing unit operationally connected to the analog to digital converter for processing the digitized signals into the pulse oximetry value and for controlling operation of the light emitting diodes.

8. The medical pulse oximetry sensor as set forth in claim **7**, wherein the processing circuit of the semiconducting chip includes:

a light emitting diode control portion operationally connected to the microprocessing unit that controls light emissions from the first and second light emitting diodes.

9. The medical pulse oximetry sensor as set forth in claim **7**, wherein the processing circuit of the semiconducting chip includes:

a timing circuit that coordinates signal processing by the microprocessing unit, the analog to digital converter, and the sample and hold, and the emission of light by the first and second light emitting diodes.

10. The medical pulse oximetry sensor as set forth in claim **2**, wherein the processing circuit of the semiconducting chip includes:

a range finder that selects an amplification range or the amplifier.

11. The medical pulse oximetry sensor as set forth in claim **1**, further including:

additional light emitting diodes, each emitting additional wavelengths of electromagnetic radiation.

12. The medical pulse oximetry sensor as set forth in claim **1**, wherein the photodiode is integrally formed in the semiconductor chip.

13. The medical pulse oximetry sensor as set forth in claim **1**, wherein the photodiode is electrically connected to the semiconductor chip.

14. The medical pulse oximetry sensor as set forth in claim **1**, wherein the semiconductor chip is a CMOS chip.

15. The medical pulse oximetry sensor as set forth in claim **14**, wherein the CMOS chip includes:

an amplifier for amplifying the signals from the photodiode;

a current to voltage converter for analog modulation and one of frequency and phase multiplexed LED modulation of the signals from the photodiode;

a circuit for digitizing the signal from the photodiode;

a microprocessing unit for processing the digitized segments into the pulse oximetry value;

a light emitting diode control portion operationally connected to the microprocessing unit that controls light emissions from the first and second light emitting diodes;

a timing circuit that coordinates digitizing and processing the signals and operations of the light emitting diodes.

16. The medical pulse oximetry sensor as set forth in claim **14**, further including:

a wireless transmitter for transmitting the calculated pulse oximetry value to at least one of a display console and a recordation means;

a battery for providing power to the pulse oximetry sensor.

17. The medical pulse oximetry sensor as set forth in claim **14**, further including:

a cable for providing power to the pulse oximetry sensor and for transmitting the calculated pulse oximetry value to at least one of a display console and a recordation means.

18. A method manufacturing a pulse oximetry sensor comprising:

embedding at least first and second light emitting diodes into a carriage housing adapted to fit snugly about a portion of a subject's anatomy with a relatively high oxygenated blood throughput;

embedding an integrated circuit opposite the light emitting diodes, such that light emitted by the diodes must pass through the portion of the subject's anatomy before impinging upon the integrated circuit, the integrated circuit including:

at least one photodiode for detection of light signals from the at least two light emitting diodes and generating signals indicative thereof;

an amplifier for amplifying the signals from the photodiode;

digital conversion elements for digitizing the signals from the photodiode;

a processing unit for processing the digital signals into the pulse oximetry value.

19. The method of manufacturing a pulse oximetry sensor as set forth in claim **18**, wherein the integrated circuit is formed on a single CMOS substrate.

20. A method of measuring blood oxygen comprising:

emitting pulses of red light from a first LED (**16**) mounted in a carriage housing adapted to fit snugly about a portion of a subject's anatomy with a relatively high oxygenated blood throughput;

emitting pulses of infrared light from a second LED mounted in the carriage housing;

receiving light from the LEDs which has traversed a blood oxygenated portion of a person with a photodiode mounted in the carriage housing and generating electrical signals;

processing the electrical signals from the photodiode into a blood oximetry value with a processing circuit integrally formed on a semiconductor chip that is mounted in the carriage housing.

21. The method of measuring blood oxygen as set forth in claim **20**, wherein the photodiode is an integral part of the semiconductor chip.

* * * * *