US 20070208232A1

(19) United States

(12) Patent Application Publication

(10) Pub. No.: US 2007/0208232 A1

(43) Pub. Date: Sep. 6, 2007

Kovacs

(54) PHYSIOLOGIC MONITORING INITIALIZATION SYSTEMS AND METHODS

(75) Inventor: **Gregory T.A. Kovacs**, Palo Alto, CA (US)

Correspondence Address:
LAW OFFICE OF ANDREI D POPOVICI, P.C.
4020 MOORPARK AVE.
SUITE101
SAN JOSE, CA 95117 (US)

(73) Assignee: **PhysioWave Inc.**

(21) Appl. No.: **11/367,155**

(22) Filed: **Mar. 3, 2006**

Publication Classification

(51) **Int. Cl.**

A61B	*5/00*	(2006.01)
A61B	*5/04*	(2006.01)
A61B	*5/08*	(2006.01)
A61B	*5/103*	(2006.01)

(52) **U.S. Cl.** **600/300**; 600/509; 600/595; 600/533; 128/920; 600/534

(57) **ABSTRACT**

According to one aspect, physiologic monitor and/or firmware piracy are reduced by initializing physiologic monitors in the field, e.g. in medical facilities or user homes, upon verifying user authorization. A physiologic monitor may include sensors such as electrocardiogram (ECG) electrodes, accelerometers, respiratory and/or fluid load impedance electrodes, and a temperature sensor. The monitor may be connected to an initialization console, which activates and configures the monitor by transferring an authorization code, firmware, a set of enabled sensors and sampling rates, a set of customized voice messages, and other parameters, and/or by programming a programmable logic array. The initialization console may be a computer situated in a doctor's office or user's home, programmed with initialization and analysis software, and capable of connecting to an authorization server at a time of use. Physiologic monitoring and configuration/authorization data may be stored in a removable digital memory capable of use with multiple disposable monitors.

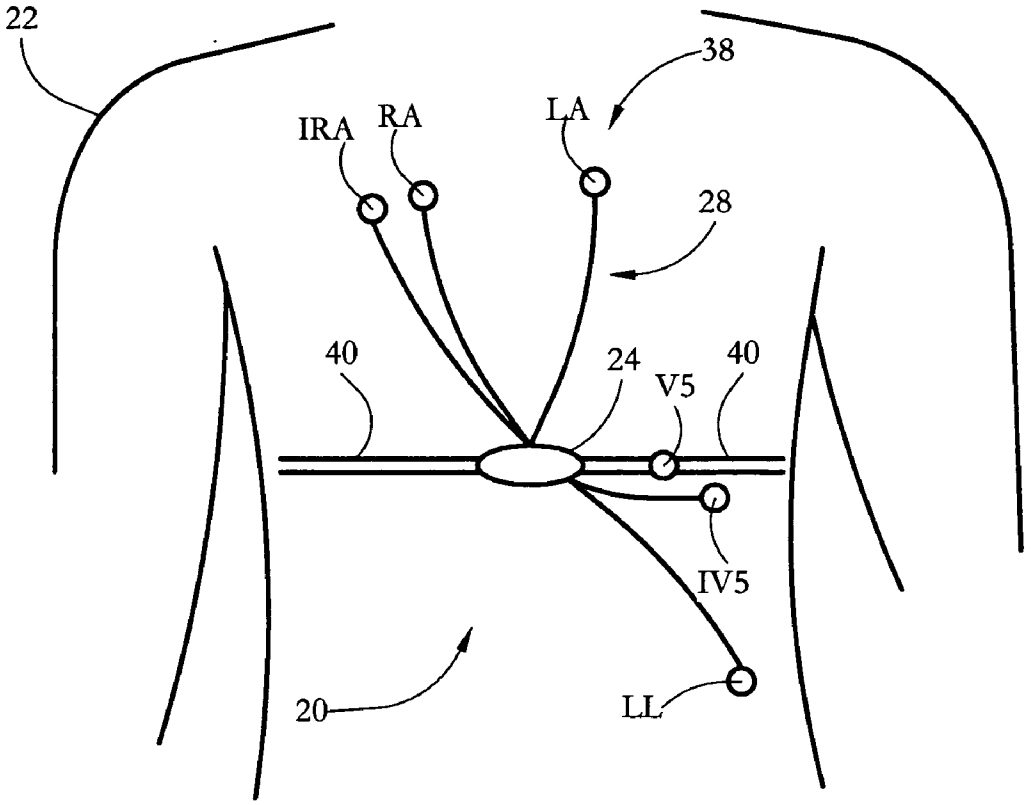

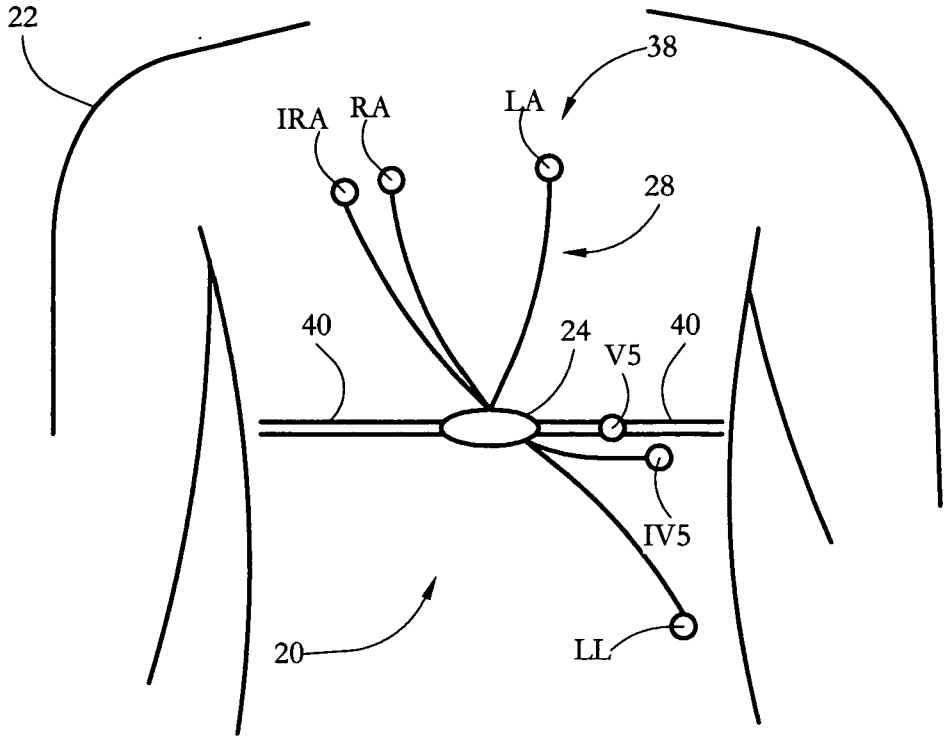

FIG. 1-A

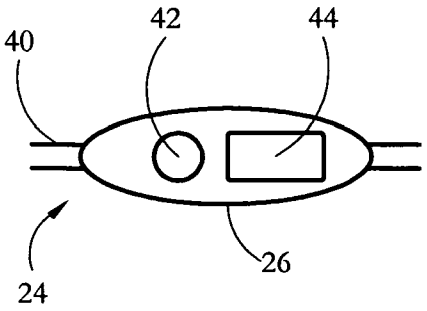

FIG. 1-B

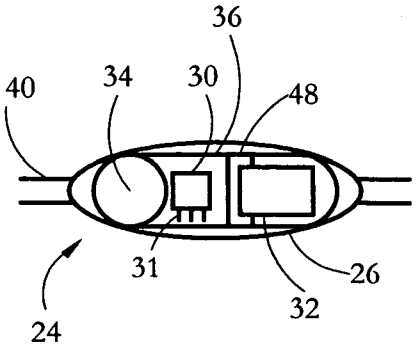

FIG. 1-C

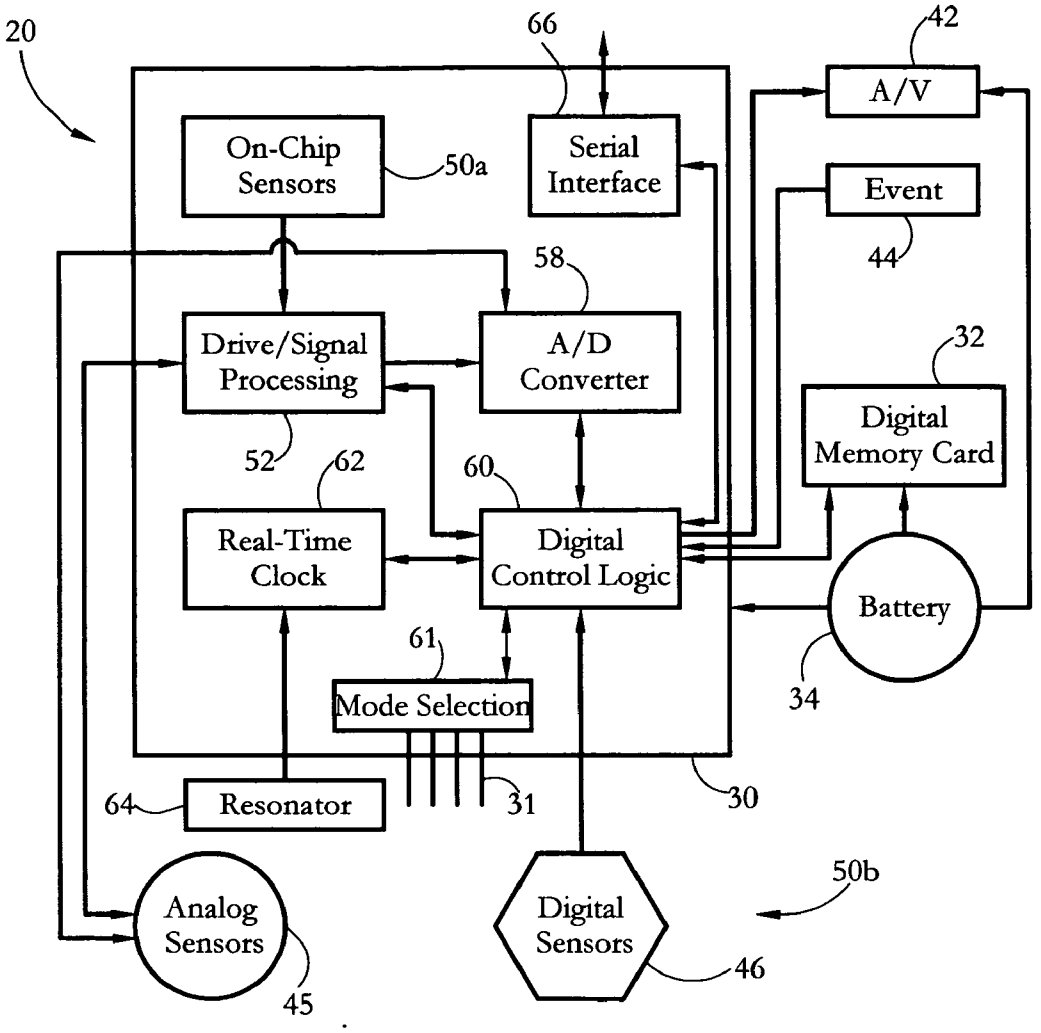
20
66
42
A/V
On-Chip Sensors
50a
Serial Interface
Event
44
58
Drive/Signal Processing
A/D Converter
32
Digital Memory Card
52
62
60
Real-Time Clock
Digital Control Logic
Battery
61
Mode Selection
34
64
Resonator
31
30
50b
Analog Sensors
Digital Sensors
45
46

FIG. 2-A

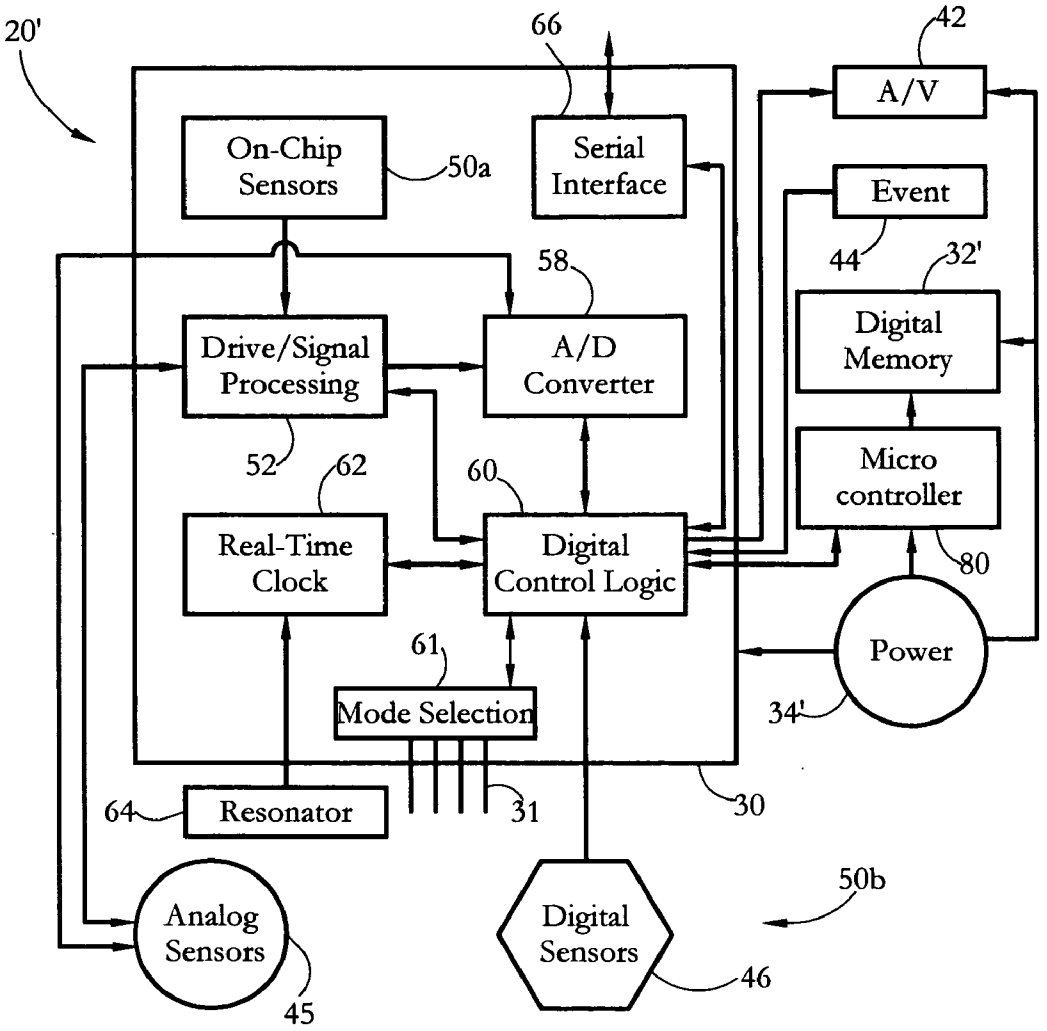
20'
66
42
A/V
On-Chip Sensors
50a
Serial Interface
Event
44
32'
58
Digital Memory
Drive/Signal Processing
A/D Converter
52
62
60
Micro controller
Real-Time Clock
Digital Control Logic
80
Power
61
Mode Selection
34'
64
Resonator
31
30
50b
Analog Sensors
Digital Sensors
45
46

FIG. 2-B

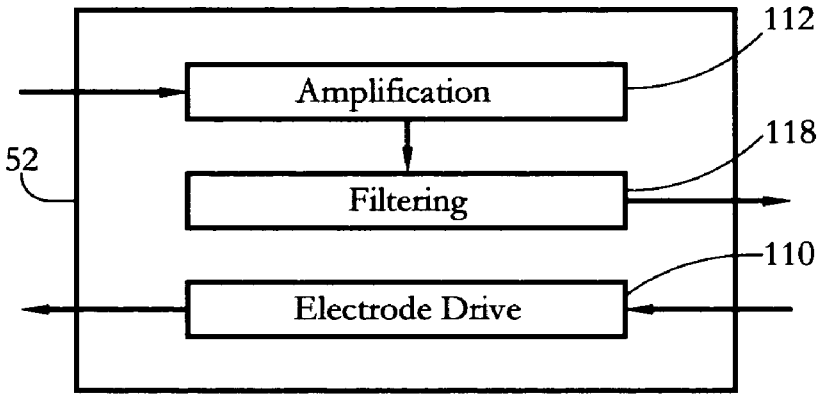
112
Amplification
118
52
Filtering
110
Electrode Drive

FIG. 3-A

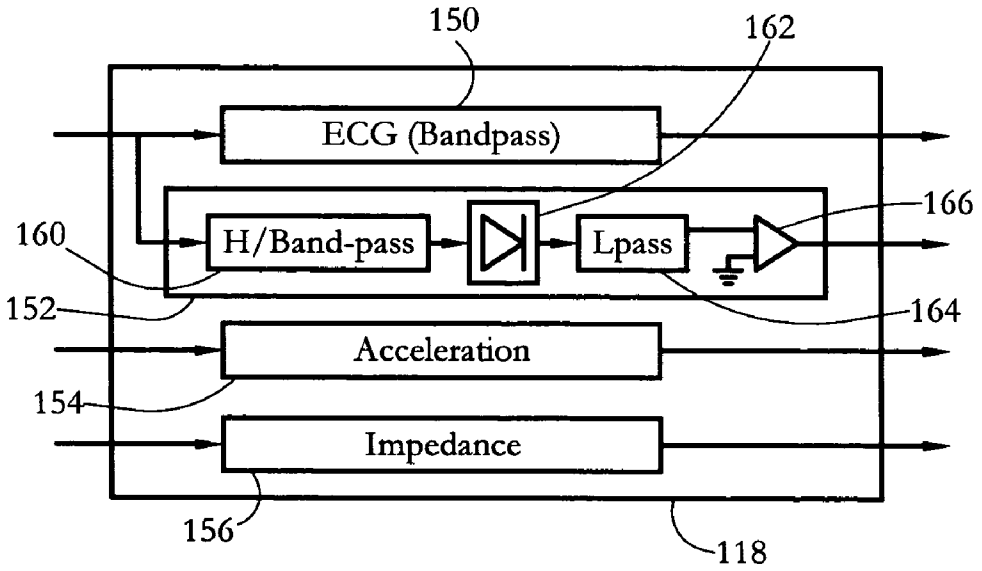
150
162
ECG (Bandpass)
166
160
H/Band-pass
Lpass
152
164
Acceleration
154
Impedance
156
118

FIG. 3-B

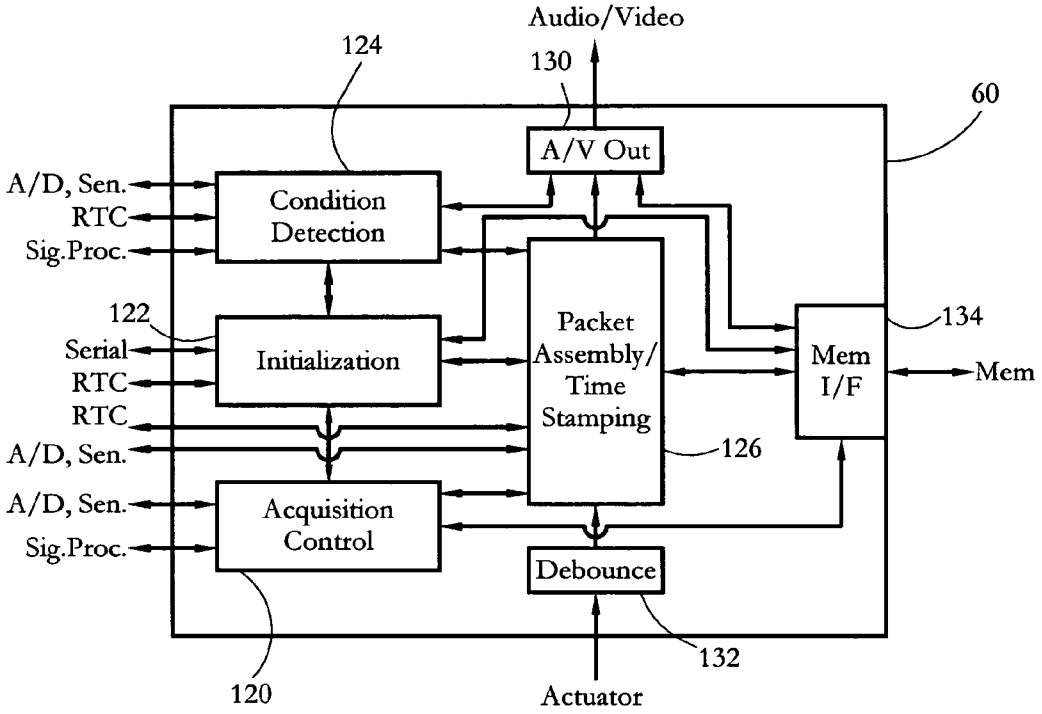
Audio/Video
124
130
60
A/V Out
A/D, Sen.
RTC
Sig.Proc.
Condition Detection
122
Serial
RTC
RTC
A/D, Sen.
Initialization
Packet Assembly/ Time Stamping
134
Mem I/F
Mem
126
A/D, Sen.
Sig.Proc.
Acquisition Control
Debounce
132
120
Actuator

FIG. 4

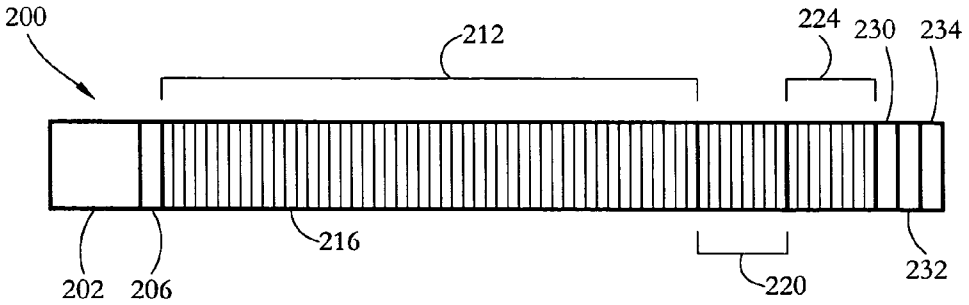
200
212
224
230
234
216
202
206
220
232

FIG. 5

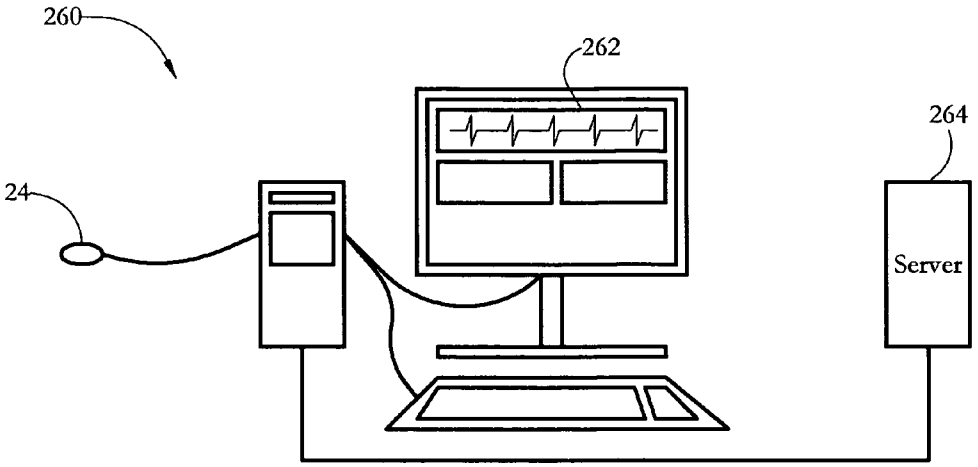
260
262
264
24
Server

FIG. 6-A

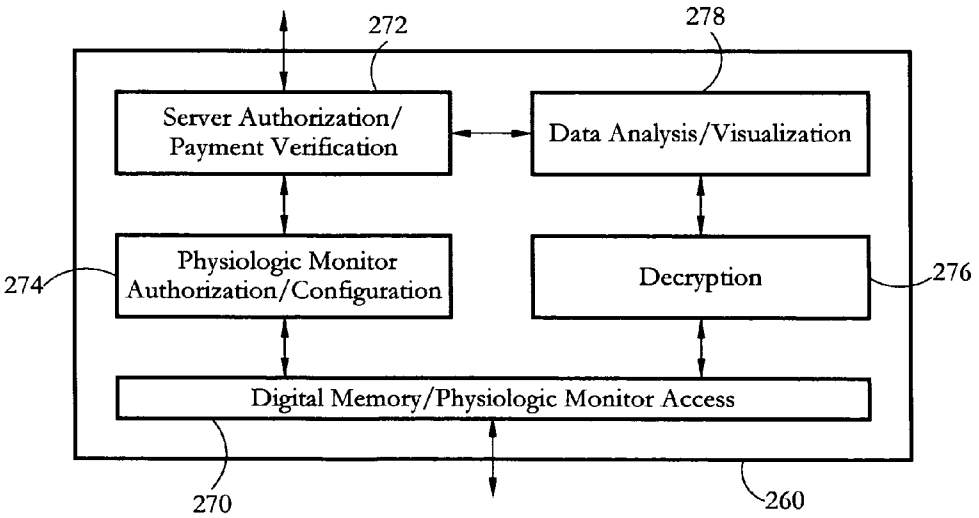
272
278
Server Authorization/
Payment Verification
Data Analysis/Visualization
Physiologic Monitor
Authorization/Configuration
Decryption
274
276
Digital Memory/Physiologic Monitor Access
270
260

FIG. 6-B

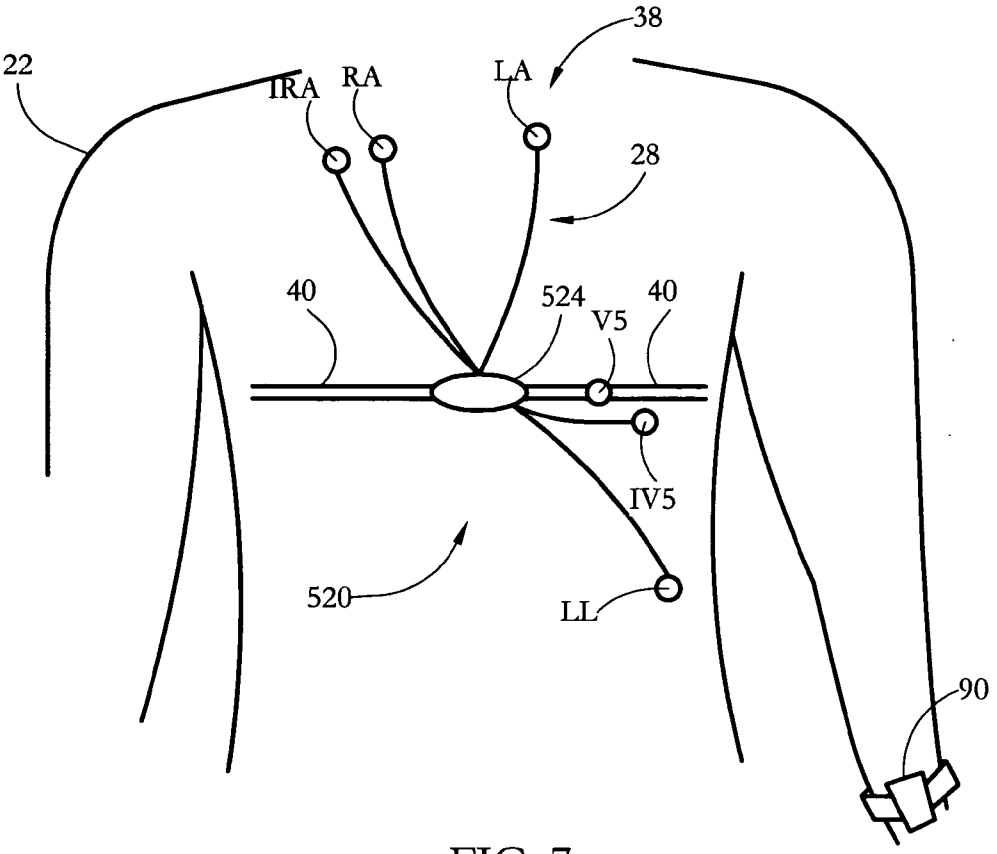
38
22
IRA
RA
LA
28
40
524
V5
40
IV5
520
LL
90

FIG. 7

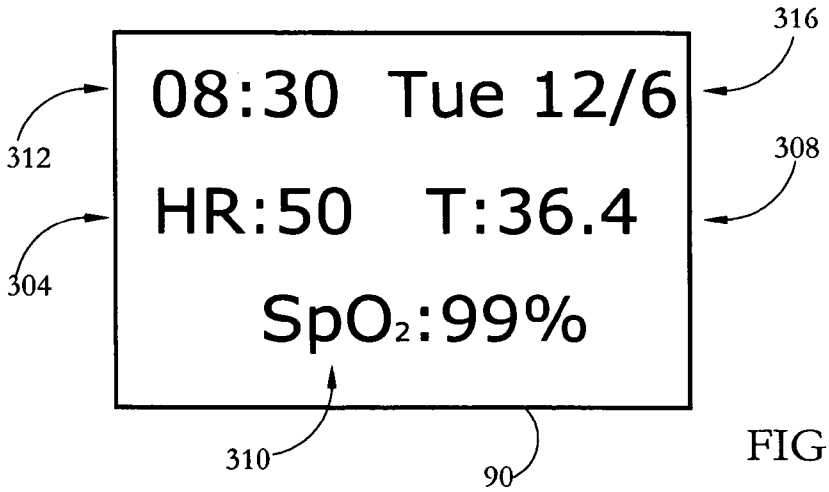
316
08:30 Tue 12/6
312
308
HR:50 T:36.4
304
SpO2:99%
310
90

FIG. 9

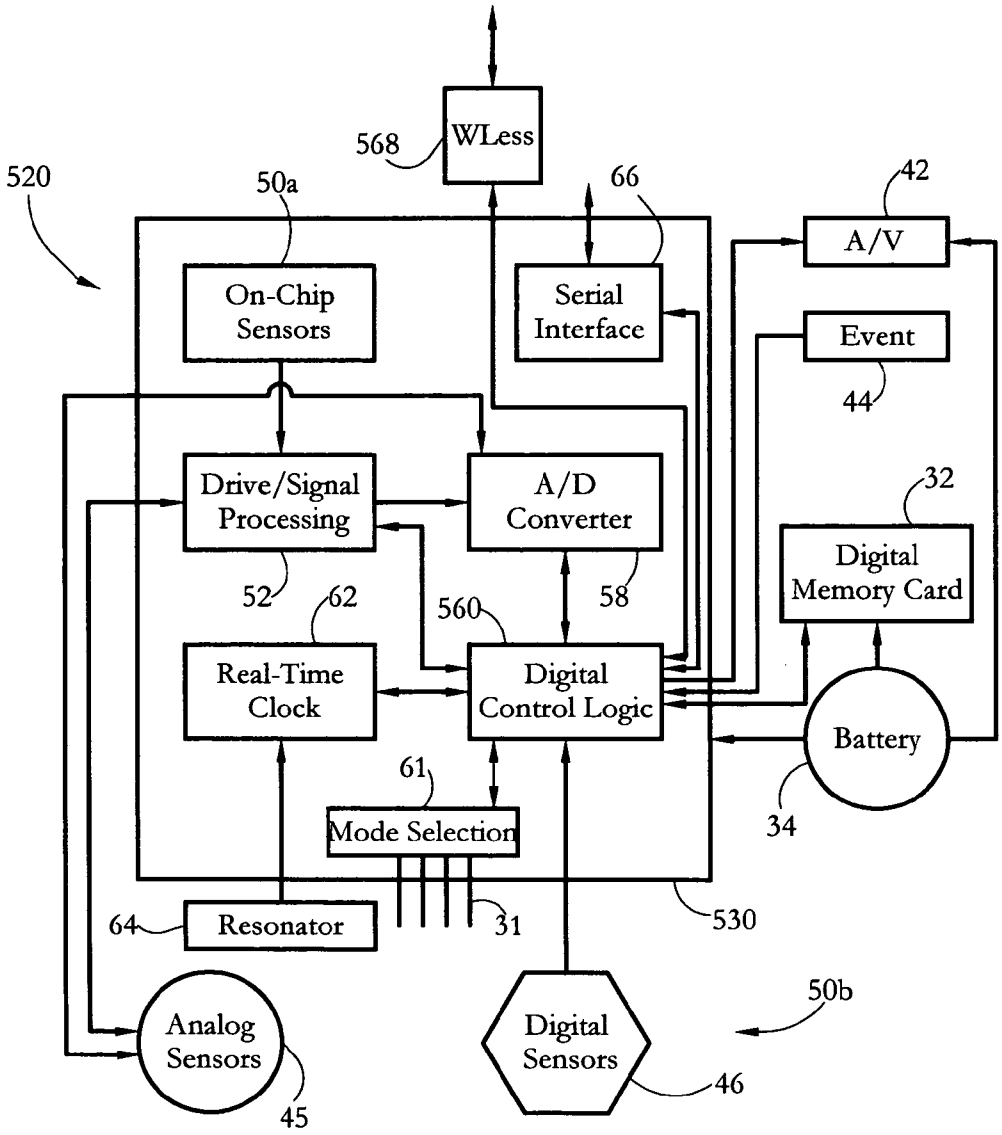
WLess
568
520
50a
66
42
A/V
On-Chip Sensors
Serial Interface
Event
44
Drive/Signal Processing
A/D Converter
32
Digital Memory Card
52
62
560
58
Real-Time Clock
Digital Control Logic
Battery
61
Mode Selection
34
64
Resonator
31
530
50b
Analog Sensors
Digital Sensors
45
46

FIG. 8

PHYSIOLOGIC MONITORING INITIALIZATION SYSTEMS AND METHODS

RELATED APPLICATION DATA

[0001] This application is related to the U.S. Patent Applications entitled "Integrated Physiologic Monitoring Systems and Methods" and "Dual-Mode Physiologic Monitoring Systems and Methods," inventor Kovacs, G. T. A., which are being filed concurrently with the present application.

BACKGROUND

[0002] The invention relates to physiologic monitoring systems and methods, and in particular to physiologic monitors.

[0003] Physiological monitoring instruments are used to measure a number of patient vital signs, including blood oxygen level, body temperature, respiration rate, and electrical activity for electrocardiogram (ECG) or electroencephalogram (EEG) measurements. In a common design used to perform ECG measurements, a number of electrocardiograph leads are connected to the patient's skin. Voltage variations are recorded over a period of time, and the resulting signals are processed, stored, and interpreted. The ECG signals of interest may be considerably lower in magnitude than environmental electrical noise levels generated by power lines, fluorescent lights, neighboring electrical devices, or electrolytic effects at the interface between the ECG leads and the patient's skin. The electrical signals sensed by the leads are commonly amplified and filtered in order to generate useful data.

[0004] A Holter monitor is an ambulatory electrocardiography device that allows heart monitoring for many hours or even days. Typical Holter monitors employ three to seven leads attached to a subject's skin. The monitor is commonly carried in a pocket or attached to a belt, and keeps a log of the heart's activity during a recording period.

[0005] A number of U.S. patents describe physiologic monitors, including portable ECG monitors. For example, in U.S. Pat. No. 5,701,894, Cherry et al. describe an ambulatory physiological computer recorder that includes multiple selective plug-and-play signal input conditioners, a microprocessor system with operating and analyzing software, and a removable memory module for data storage. System sensors may include electrodes for ECG, as well as sensors for measuring body temperature, respiration, skin conductance, and acceleration, among others.

[0006] In U.S. Pat. No. 6,198,394, Jacobsen et al. describe a system for remotely monitoring personnel status, including a plurality of sensors disposable on a soldier or other person for developing signals to determine the person's physiological status. Jacobsen et al. describe a wearable sensor unit including multiple sensors and a master controller or processor. Jacobsen et al. also describe employing a wrist sensor/display unit which may include multiple sensors and a controller connected to the sensors. The wrist unit is used in conjunction with a soldier unit carried by a soldier. The soldier unit also includes a controller, sensors, and other devices such as a global positioning system (GPS) device.

[0007] In U.S. Pat. No. 6,454,708, Ferguson et al. describe a system for monitoring health parameters and capturing data from a subject. The system includes a cordless sensor band with sensors for measuring full waveform ECG, full waveform respiration, skin temperature, and motion, and a connector which accepts a memory card or a smart card for storage of measured data.

SUMMARY

[0008] According to one aspect, a physiologic monitoring method comprises storing a set of physiologic monitor configuration data in a removable digital memory; employing a wearable physiologic monitor including the digital memory to perform a set of physiologic measurements according to the configuration data on a subject wearing the monitor; and storing digital physiologic data generated by the physiologic measurements in the digital memory.

[0009] According to another aspect, a physiologic monitoring system comprises a wearable physiologic monitor comprising a set of physiologic sensors, signal conditioning circuitry connected to the sensors, and digital control logic connected to the signal conditioning circuitry; and a removable digital memory connected to the digital control logic and storing physiologic monitor configuration data for configuring a set of physiologic sensing operations performed by the physiologic monitor, and subject physiologic monitoring data recorded by the physiologic monitor.

[0010] According to another aspect, a physiologic monitoring method comprises storing a set of physiologic monitor authorization data in a removable digital memory; transitioning a wearable physiologic monitor from an un-initialized state to an initialized state using the physiologic monitor authorization data stored in the removable digital memory, wherein the physiologic monitor in the un-initialized state is not user-operable to record a set of physiologic monitoring data from a subject, and wherein the physiologic monitor in the initialized state is user-operable to record the set of physiologic monitoring data from the subject; employing the physiologic monitor including the removable digital memory to record the set of physiologic monitoring data on the subject wearing the physiologic monitor; and storing the set of physiologic monitoring data in the removable digital memory.

[0011] According to another aspect, a physiologic monitoring kit comprises a removable digital memory storing a set of physiologic monitor authorization data and configured to receive a set of physiologic monitoring data; and a plurality of disposable, wearable physiologic monitors in an un-initialized state. Each physiologic monitor is configured to connect to the removable digital memory and to transition from the un-initialized state to an initialized state upon receiving the physiologic monitor authorization data from the digital memory. Each physiologic monitor in the un-initialized state is not user-operable to record the set of physiologic monitoring data from a subject, and in the initialized state is user-operable to record the set of physiologic monitoring data from the subject.

[0012] According to another aspect, a physiologic monitoring method comprises: upon verifying that a subject's use of a wearable physiologic monitor is authorized, employing an initialization console to perform an activation of the physiologic monitor, wherein the activation transitions the physiologic monitor from a un-initialized state to an initialized state, wherein the physiologic monitor in the un-initialized state is not user-operable to perform a set of

physiologic measurements, wherein the physiologic monitor in the initialized state is user-operable to perform the set of physiologic measurements; and using the physiologic monitor to perform a set of physiologic measurements on the subject and store digital physiologic data generated by the physiologic measurements in a digital memory of the physiologic monitor.

[0013] According to another aspect, a physiologic monitoring method comprises: upon verifying that a subject's use of a wearable physiologic monitor is authorized, employing an initialization console to perform a configuration of the physiologic monitor, wherein the configuration defines a set of physiologic sensing operations to be performed by the physiologic monitor; and using the physiologic monitor to perform a set of physiologic measurements on the subject and store digital physiologic data generated by the physiologic measurements in a digital memory of the physiologic monitor.

[0014] According to another aspect, a physiologic monitor initialization console comprises a server authorization unit for connecting to an authorization server over a wide area network to verify that a subject's use of a wearable physiologic monitor is authorized; and a physiologic monitor configuration unit connected to the server authorization unit, for performing a configuration of the physiologic monitor upon verifying that the subject's use of the wearable physiologic monitor is authorized, wherein the configuration defines a set of physiologic sensing operations to be performed by the physiologic monitor.

[0015] According to another aspect, a physiologic monitoring method comprises: receiving a payment from a payor for a subject-specific set of authorized monitoring uses of a wearable physiologic monitor; activating the set of authorized monitoring uses of the physiologic monitor by programming a set of configuration data in a digital memory of the physiologic monitor; employing the physiologic monitor including the digital memory to perform a set of physiologic measurements according to the configuration data on the subject while the subject wears the physiologic monitor; and storing digital physiologic data generated by the physiologic measurements in the digital memory.

BRIEF DESCRIPTION OF THE DRAWINGS

[0016] The foregoing aspects and advantages of the present invention will become better understood upon reading the following detailed description and upon reference to the drawings where:

[0017] FIG. 1-A shows a schematic view of a wearable physiologic monitor placed on a subject, according to some embodiments of the present invention.

[0018] FIG. 1-B shows a more detailed view of the physiologic monitor of FIG. 1-A according to some embodiments of the present invention.

[0019] FIG. 1-C shows a number of components of the physiologic monitor of FIG. 1-B according to some embodiments of the present invention.

[0020] FIG. 2-A is a diagram of the physiologic monitor of FIGS. 1-A-C in a stand-alone mode of operation, according to some embodiments of the present invention.

[0021] FIG. 2-B is a diagram of the physiologic monitor of FIGS. 1-A-C in a peripheral mode of operation, according to some embodiments of the present invention.

[0022] FIG. 3-A is a diagram of a signal drive and signal processing circuit of the physiologic monitor of FIGS. 1-A-C according to some embodiments of the present invention.

[0023] FIG. 3-B is a diagram of a filtering circuit of the circuit of FIG. 3-A according to some embodiments of the present invention.

[0024] FIG. 4 is a diagram of an exemplary digital control logic unit of the physiologic monitor of FIGS. 1-A-C according to some embodiments of the present invention.

[0025] FIG. 5 shows exemplary data packet contents according to some embodiments of the present invention.

[0026] FIG. 6-A shows an exemplary initialization and analysis console and an authorization server for a physiologic monitor according to some embodiments of the present invention.

[0027] FIG. 6-B shows a set of software subsystems of the initialization console of FIG. 6-A according to some embodiments of the present invention.

[0028] FIG. 7 shows a wearable physiologic monitor system including a wearable display connected to a wearable physiologic monitor, according to some embodiments of the present invention.

[0029] FIG. 8 is a diagram of the physiologic monitor of FIG. 7 according to some embodiments of the present invention.

[0030] FIG. 9 shows an exemplary real-time display of physiologic data according to some embodiments of the present invention.

DETAILED DESCRIPTION OF PREFERRED EMBODIMENTS

[0031] In the following description, it is understood that all recited connections between structures can be direct operative connections or indirect operative connections through intermediary structures. For example, digital control logic may be connected to amplification/filtering circuitry through an A/D converter. A set of elements includes one or more elements. A plurality of elements includes two or more elements. Any recitation of an element is understood to refer to at least one element. Unless otherwise specified, the term "logic" encompasses both dedicated (hardwired) logic and programmable logic such as logic implemented using field-programmable gate arrays (FPGA) or a programmable microcontroller. Unless otherwise specified, a wearable monitor encompasses monitors adhered to a subject (e.g. patches), as well as monitors loosely attached to a subject (e.g. through clothing, bands, string, a fanny pack, or other structures). Unless otherwise required, any described method steps need not be necessarily performed in a particular illustrated order. A first element (e.g. data) derived or generated from a second element encompasses a first element equal to the second element, as well as a first element generated by processing the second element and optionally other data. Generating a parameter of performing an action according to some data is not limited to generating the

parameter or performing the action according only to that data, but encompasses using other data as well. An encapsulant is understood to be a generally-flexible material that encapsulates at least partially one or more enclosed components. Time-stamping first and second data encompasses applying a common time-stamp to a data packet including the first and second data, as well as separately time-stamping the first and second data with individual time-stamps. Time-stamping a data packet encompasses including an internal time-stamp within the packet, as well as associating an external time-stamp with the data packet. Unless otherwise specified, the statement that a digital memory is removable is understood to mean that the digital memory is removable by an end-user in the field by sliding or otherwise moving into and out of a mating position, without disassembling or destroying the memory or mating components. The statement that "amplification and filtering circuitry" includes a recited type of circuitry (e.g. continuous-time analog, switched capacitor, or DSP) means that at least some of the amplification and filtering circuitry includes the recited type of circuitry, and does not require both amplification circuitry and filtering circuitry to include the recited type of circuitry. Computer readable media encompass storage media such as magnetic, optic, and semiconductor media (e.g. hard drives, optical disks, flash memory, SRAM). The term "wide area network" encompasses the Internet as well as other networks including at least one router. Unless otherwise specified, the term "subject" encompasses both human and animal subjects. Unless otherwise specified, "home" use of a monitor refers to use during a normal course of activity of the subject and outside a medical setting (e.g. hospital or doctor's office), and is not limited to use at a home address of the subject. Replacing a first course of therapy with a second course of therapy encompasses employing a second course of therapy that is a modification of the first course of therapy (e.g. a modification in a medication dosage). Aspects of exemplary illustrated embodiments may contain patentable subject matter without regard to other aspects of the illustrated embodiments. Aspects of exemplary embodiments described below may be combined in ways other than the exemplary ways illustrated.

[0032] The following description illustrates embodiments of the invention by way of example and not necessarily by way of limitation.

[0033] FIG. **1**-A shows a wearable physiologic monitoring system **20** placed on the skin of a subject **22**, according to some embodiments of the present invention. Subject **22** may be a human or animal subject. Physiologic monitoring system **20** includes a wearable physiologic monitor **24**, a plurality of subject electrical activity electrodes **38** attached to the subject's skin, and interconnections **28** connecting electrodes **38** to physiologic monitor **24**. In some embodiments, electrical activity electrodes **38** include electrocardiogram (ECG) electrodes, as well as respiratory and/or fluid load impedance electrodes. The exemplary six-electrode configuration shown in FIG. **1**-A includes LA (left arm), RA (right arm), IRA (respiratory/fluid load impedance RA), LL (left leg), V**5** (left anterior axillary line in 5th intercostal space), and IV**5** (respiratory/fluid load impedance V**5**) electrodes. The LA, RA, LL and V**5** leads are used for ECG measurements, while the IRA and IV**5** leads are used for respiration and/or fluid load measurements. Other electrode configurations, including fewer or more electrodes and other electrode placements, are suitable for use in embodiments of the present invention. In some embodiments, electrodes **38** may include electroencephalogram (EEG) electrodes.

[0034] Interconnections **28** may include conductive wires with clips attached to electrodes **38**. Physiologic monitoring system **20** may include additional physiologic and external parameter sensors, as described in detail below. Electrodes **38** are electrically connected to physiologic monitor **24**. Physiologic monitor **24** may be formed by a patch held in place on the patient's skin by an underlying adhesive and/or a set of flexible straps **40**. In some embodiments, physiologic monitor **24** is a disposable bandage unit, which may include encapsulated electrodes and electrode interconnections. In some embodiments, physiologic monitor **24** may include a case attached to external electrodes through wires.

[0035] FIG. **1**-B shows a top view of physiologic monitor **24** according to some embodiments of the present invention. A sound and/or light indicator **42** and a user-activated event actuator (e.g. a button) **44** are situated on an outer surface of physiologic monitor **24**. In some embodiments, indicator **42** includes an LED providing visual system status indicators to a user. Indicator **42** may also include a speaker emitting status and/or prompt sounds (e.g. beeps, music, synthesized speech) for the user. Indicator **42** may include a D/A converter, low-pass filter, and power amplifier connected in sequence between its input and the speaker and/or LED. In some embodiments, light/sound indicator **42** may be replaced by or used in conjunction with an additional annunciator capable of providing vibratory or other tactile stimulation. Event actuator **44** allows a user to mark events of note (e.g. falling, feeling faint, unusual feelings, taking medications) by pressing actuator **44**. In some embodiments, user input actuators or controls may be provided in addition to actuator **44** to allow a user to enter a current date and time.

[0036] FIG. **1**-C shows several components held within an encapsulant **26** of physiologic monitor **24**. Encapsulant **26** may include a flexible material such as polyurethane. Encapsulant **26** partially encloses physiologic monitor **24**, to provide mechanical protection to physiologic monitor **24** while allowing external access to indicator **42**, event actuator **44**, and a battery **34**. Battery **34** may be sealed-in during a manufacture of physiologic monitor **24**, or inserted into physiologic monitor **24** by a user. A flexible substrate **36** supports battery **34** and an application-specific integrated circuit (ASIC) **30**. Integrated circuit **30** includes a set of input pins **31**, some of which may be bonded to a given logic level (0, 1) configuration to set an operating mode of integrated circuit **30**, as described below. Substrate **36** may include a non-conductive base and a set of conductive tracks (lines) formed on the base. In some embodiments, substrate **36** may be formed as described by Haines et al. in U.S. Pat. No. 6,385,473, herein incorporated by reference.

[0037] A digital memory **32** is coupled to integrated circuit **30**, and stores processed physiologic data in digital form, as described below. In some embodiments, digital memory **32** includes a flash memory card removably mounted in a memory card connector (socket) **48** defined along substrate **36**. Suitable flash memory card formats include Compact Flash (CF) and xD-Picture card (xD), among others. In some embodiments, the digital memory may include a memory chip affixed to substrate **36**. In some embodiments, the digital memory may include on-chip memory integrated

with ASIC **30**, as well as a non-removable, off-chip digital memory. In particular, in some embodiments, all data storage described below is performed in a removable memory card; in some embodiments, all data storage described below is performed in an on-chip memory; and in some embodiments, the bulk of measured physiologic data is stored in a removable memory card, while a set of configuration/initialization data is stored in an on-chip memory. Such configuration/initialization data may include settings and operational data such as firmware, subject ID, sensor sampling rates, authorization codes and data on authorized uses. An on-chip memory may also be used to provide temporary buffering of physiologic data while a memory card is exchanged.

[**0038**] Integrated circuit **30** is capable of operating in two or more alternative modes. Supported modes include a stand-alone mode, in which integrated circuit **30** stores data directly to digital memory **32**, and a peripheral mode, in which integrated circuit **30** is used as a peripheral to a microcontroller. In some embodiments, the mode of operation is set during a mounting and connection of integrated circuit **30** on substrate **36**, for example by bonding an input pin of integrated circuit **30** to one logic level (e.g. one, or V_{dd}) for one mode, and to another logic level (e.g. zero, or V_{ss}) for the other mode. Integrated circuit **30** may be set to the stand-along mode if it is to be used in a disposable, wearable product, and to the peripheral mode if it is to be used in a reusable (wearable or bedside) product.

[**0039**] FIG. **2**-A shows a diagram of part of physiologic monitoring system **20** in a stand-alone mode of operation of integrated circuit **30**, according to some embodiments of the present invention. Integrated circuit **30** includes a set of on-chip sensors **50***a*, a signal drive and signal processing circuit **52**, an analog-to-digital (A/D) converter **58**, digital control logic **60**, mode-selection logic **61**, a real-time clock **62**, and an I/O port such as a serial interface **66**. Real-time clock **62** is connected to a resonator **64**. Resonator **64** may include an on-chip or off-chip timing resonator, and/or an off-chip quartz crystal.

[**0040**] A set of off-chip sensors **50***b* includes a set of sensors **45** having analog outputs, and a set of sensors **46** having digital outputs. Analog sensors **45** may include the electrical activity electrodes **38** shown in FIG. **1**-A. In some embodiments, the set of on-chip sensors **50***a* includes an integrated temperature sensor and integrated three-axis accelerometers, while other sensors are provided off-chip. In some embodiments, the set of on-chip sensors **50***a* may include one or more of the sensor types described below. In some embodiments, the off-chip sensors **50***b* include one or more accelerometers and/or tilt sensors, an electrical or mechanical respiration and/or fluid load sensor, an off-chip temperature sensor, a pulse oximeter, a light intensity sensor, an ionizing radiation sensor, a galvanic skin resistance sensor, a joint-angle goniometer, a strain sensor, and/or an acoustic sensor. Such sensors are configured to detect parameters within physiologically-relevant ranges known in the art.

[**0041**] The temperature sensor is thermally coupled to the subject's skin, and provides real-time temperature data indicative of the subject's current temperature. In some embodiments, an on-chip temperature sensor may include an on-chip diode. Measuring a diode's forward voltage employs a diode's natural temperature sensitivity to provide a temperature indication. An on-chip temperature sensor may also employ a temperature-dependence of a bandgap voltage to provide a temperature indication. For information on junction-based temperature sensors, which may be integrated in a CMOS or bipolar integrated circuit, see for example "Thermal Transducers," Chapter 6 of Kovacs, G. T. A., "Micromachined Transducers Sourcebook," McGraw-Hill, Inc., New York, N.Y., 1998, pp. 570-577. Preferably, the reading provided by the on-chip temperature sensor is substantially-independent of the power dissipation of integrated circuit **30**. Thus, preferably, the power dissipation of integrated circuit **30** is minimized, and the thermal coupling between the sensor and the subject is maximized, so as to minimize the effects of integrated circuit power dissipation on the temperature sensor output. In some embodiments, the temperature sensor is capable of measuring temperatures between 0 and 50° C. with an accuracy of 0.5° C. In some embodiments, a temperature sensor may include an ambient temperature sensor, a skin probe contacting the subject for skin temperature measurements, or a rectal probe for core temperature measurements.

[**0042**] The accelerometers provide real-time data on the relative position of the wearer (e.g. standing, supine), as well as his/her dynamic movements (e.g. walking, running, sleep, etc.). One or more accelerators may be provided for each of the x-, y- and z-axes. In some embodiments, the accelerometers are DC-responsive accelerometers capable of measuring acceleration values up to a predetermined threshold, which may be chosen to be between 2 g and 5 g. DC-responsive accelerometers are capable of measuring both constant and time-varying accelerations. Constant accelerations are steady-state accelerations, such as the gravitational acceleration. Measurement of such steady-state accelerations may be used to determine subject body orientations, i.e. standing vs. lying down. Time-varying accelerations may include accelerations caused by walking. The set of accelerators may include accelerators capable of determining acceleration values, as well as activity sensors, or switch-type accelerators, which detect whether an acceleration threshold has been exceeded. A switch-type accelerator may include a movable mass which closes a pair of switch contacts when the accelerometer is subjected to a sufficiently high steady-state or dynamic acceleration. Multiple switch-type accelerometers with different thresholds may be used along an axis, in order to provide information regarding the magnitude of sensed accelerations.

[**0043**] An impedance-based respiration and fluid load/hydration sensor is capable of detecting a trans-thoracic impedance of the subject by applying an alternating-current (AC) signal to one electrode placed on the subject's skin, and detecting the subject's response to the applied signal through another electrode placed on the subject's skin. The electrodes may include the IRA and IV**5** leads shown in FIG. **1**-A. The high-frequency part of the detected impedance is indicative of the subject's respiration, while the low-frequency or steady part of the impedance is indicative of the subject's fluid load/hydration. A mechanical respiration sensor may include a resistive band, applied to the subject's chest, having a resistance proportional to a subject chest's expansion. An exemplary respiration sensor may include a Procomp™ sensor, available from Thought Technology Ltd., West Chazy, N.Y.

[0044] A pulse oximeter is capable of detecting the subject's blood oxygen levels. A suitable pulse oximeter may include a Nonin® pulse oximeter (Nonin Medical Inc., Plymouth, Minn.), which may be attached to a finger, the forehead, or an ear lobe. Light intensity and acoustic sensors may be used to detect ambient light and sound levels, respectively. An ionizing radiation sensor may be used to detect levels of ionizing radiation such as gamma-radiation and X-ray energy. A galvanic skin resistance sensor may be used to measure the electrical resistance of the subject's skin, which depends on sweating, among other factors. A joint-angle goniometer may be used to measure the angle of a subject's joint. An exemplary joint-angle goniometer is available from ADInstruments, Inc., Colorado Springs, Colo.

[0045] A signal drive and signal processing (signal conditioning) circuit **52** is connected to on-chip sensors **50***a* and off-chip sensors **50***b*, including analog sensors **45** and digital sensors **46**. FIG. **3**-A shows a diagram of drive/processing circuit **52** according to some embodiments of the present invention. In response to enable signals received from digital control logic **60**, a signal drive circuit **110** drives one or more analog sensors **45** (FIG. **2**-A). For example, if analog sensors **45** include impedance-based respiration measurement electrodes, signal-drive circuit **110** provides an AC drive signal (voltage or current) to one of the electrodes. In some embodiments, signal drive circuit **110** is used, under the control of digital control logic **60**, to identify inoperative ECG leads, such as leads that have may have become loose or been pulled off accidentally. Inoperative ECG leads are detected by an ECG fault detection circuit, which may include an AC signal (voltage or current) source, and a set of analog switches applying an AC test signal generated by the source to a selected ECG electrode being tested. An ECG lead fault is identified by measuring an impedance between the selected electrode and a reference (e.g. another electrode). An inappropriately high impedance value indicates that the ECG lead is disconnected or otherwise faulty.

[0046] An analog amplification circuit (amplifiers) **112** receives sensed signals from on-chip sensors **50***a* and off-chip analog sensors **45**, and amplifies the received signals. A filtering circuit **118** filters the signals, which are then transmitted to A/D converter **58** (FIG. **2**-A). In some embodiments, amplification circuit **112** and filtering circuit **118** may include multiple components used in parallel, for amplifying and filtering signals received from different types of sensors, which may correspond to different signal amplitudes, frequency content, and A/D sampling rates. Such components may include components used only in some configurations. For example, amplification circuit **112** and filtering circuit **118** may include circuitry capable of processing signals from twelve ECG leads and a number of sensor types described above, even though not all ECG leads and/or sensor types are used. A given sensor combination may be enabled by setting (e.g. bonding) a set of sensor configuration inputs (e.g. pins) of integrated circuit **30** to a combination of ones (e.g. V_{dd}, the circuit positive supply voltage) and zeros (e.g. V_{ss}, ground or the circuit negative supply voltage). An exemplary sensor set configuration may use only two of twelve available ECG leads. In a peripheral mode (described below with reference to FIG. **2**-B), the sensor configuration mode of amplification circuit **112** and filtering circuit **118** may be set using a programmable internal register rather than bonded sensor configuration pins. In some embodiments, a given sensor combination may also be dynamically configured at a time of use, through digital control logic **60**.

[0047] Amplification circuit **112** may include one or more voltage and/or transresistance (transimpedance) amplifiers, depending on whether voltage or current is sensed. Amplification circuit **112** may also include one or more differential amplification circuits, particularly for ECG signal processing. Amplification circuit **112** amplifies received signals so that the amplitude of the signal output to A/D converter **58** (FIG. **2**-A) corresponds generally to the full-scale input signal of A/D converter **58**. Generally, amplification circuit **112** is capable of amplifying received signals by a factor on the order of at least 10, e.g. by factors of hundreds or thousands. For example, if ECG signals received from electrodes **38** have a range on the order of ±5 mV, and A/D converter **58** has an input full scale on the order of 5 V, amplification circuit **112** may offset the input to 0-10 mV and amplify the resulting signal so that A/D converter **58** receives signals ranging from 0 to 5 V. Common CMOS A/D converters may have full-scale input voltages ranging from about V_{ss} (e.g. ground) to V_{dd} values such as 3.3 V or 5 V.

[0048] Filtering circuit **118** filters received signals, and transmits resulting signals to A/D converter **58**. Filtering operations performed by filtering circuit **118** include anti-aliasing, noise-rejection, and band-shaping. Generally, the properties of filtering circuit **118** may be chosen according to the signal frequencies and sampling rates of interest, which may depend on a set of corresponding enabled sensors. At least parts of filtering circuit **118** are implemented using continuous-time analog circuitry including capacitors and resistors. In some embodiments, at least parts of filtering circuit **118** may be implemented using discrete-time analog circuitry such as switched-capacitor circuitry. In some embodiments, at least parts of filtering circuit **118** may be implemented using a digital signal processor (DSP); in such embodiments, an A/D converter may be used to digitize analog physiologic signals before input to the DSP filter, and front-end filtering circuitry may be provided to process signals before transmission to the A/D converter. In some embodiments, different parts of filtering circuit **118** may be implemented using continuous-time analog circuitry, switched capacitor circuitry, and/or a DSP. For example, filtering circuit **118** may include a continuous-time analog anti-aliasing and noise-rejection filter stage followed by subsequent continuous-time analog, switched-capacitor, and/or DSP band-shaping filters.

[0049] FIG. **3**-B shows a diagram of filtering circuit **118** according to some embodiments of the present invention. In embodiments in which filtering circuit **118** includes a DSP, DSP parts of filtering circuit **118** may be downstream from A/D converter **58** (FIG. **2**-A). Filtering circuit **118** includes an ECG signal filtering circuit **150**, a pacemaker pulse detection circuit **152**, an acceleration filtering circuit **154**, and an impedance filtering circuit **156**.

[0050] ECG signal filtering circuit **150** includes one or more bandpass filters that filter received data to reduce out-of-band noise and prevent aliasing. ECG signal filtering circuit **150** transmits the resulting signals to A/D converter **58** (FIG. **2**-A). Common ECG filter cut-offs may be between 0.5 and 100 Hz. For a filter low-pass cut-off frequency of 100 Hz and a sampling rate of 256 samples/second (corresponding to a Nyquist frequency of 128 Hz), a filtering

circuit with a roll-off of 72 dB between 100 Hz and 128 Hz may be used to attenuate undesired high-frequency signals below the dynamic range of a 12-bit A/D converter, with a 6 dB dynamic range per bit. In some embodiments, ECG filtering circuit **150** may include circuitry for carrying out inter-lead calculations such as deriving augmented ECG lead data by performing algebraic combinations using standard ECG lead data. For information on conventional frequency response specification data defined for ECG applications see for example the ANSI standard document "Ambulatory Electrocardiographs," ANSI/AAMI EC38-98. For descriptions of exemplary ECG filtering circuits see for example U.S. Pat. Nos. 5,206,602 and 5,382,956, which are herein incorporated by reference.

[**0051**] Pacemaker pulse detection circuit **152** detects pacemaker pulses, and outputs a sequence of digital pulses each corresponding to a pacemaker pulse. Pacemaker circuit **152** may be connected to one or more of the ECG electrodes **38** (FIG. **1**-A). Pacemaker pulses are generally much narrower than normal ECG waveforms from the heart. In some embodiments, pacemaker pulse detection circuit **152** includes several circuits connected in series: a high-pass or band-pass filtering circuit (filter) **160**, a rectification circuit (rectifier) **162**, a low pass filtering circuit **164**, and a comparator circuit **166**.

[**0052**] Filtering circuit **160** may have a lower pass frequency on the order of kHz to tens of kHz (e.g. about 30 kHz), and a higher pass frequency on the order of tens to hundreds of kHz (e.g. about 100 kHz), to limit high-frequency noise. Rectification circuit **162** receives AC current and generates a rectified positive-voltage waveform. Low-pass filtering circuit **164** has a pass frequency on the order of Hz, for example about 5 Hz, chosen so as not to obscure or blur together individual pacing pulses. Low-pass filtering circuit **164** produces a pulsatile waveform, with each pulse corresponding to one pacemaker pulse signal. Comparator circuit **166** receives the pulsatile waveform, and outputs a digital output corresponding to each pacemaker pulse. Comparator circuit **166** may include a Schmitt trigger. In some embodiments, the output of low-pass filtering circuit **164** may be sent to A/D converter **58** (FIG. **2**-A), where the pacemaker pulse detection signal is sampled at a rate on the order of tens of Hz (e.g. 50 Hz). For a description of an exemplary pacemaker pulse detection circuit see for example U.S. Pat. No. 5,448,997, which is herein incorporated by reference.

[**0053**] In some embodiments, acceleration filtering circuit **154** includes a low-pass filter. In some embodiments, impedance filtering circuit **156** includes a bandpass filter for reducing out-of-band-noise. The bandpass filter is followed by a homodyne or synchronous receiver, which mixes the signal received from the bandpass filter with a signal used by electrode drive circuit **110** (FIG. **3**-A) to drive electrodes **38**. The homodyne or synchronous receiver is followed by a low-pass filter. The output of the low-pass filter is a signal proportional to the detected impedance, which is rectified and transmitted to A/D converter **58**.

[**0054**] In some embodiments, amplification circuit **112** and filtering circuit **118** include circuitry for detecting ECG lead faults. A lead fault detection circuit may include an amplifier and a demodulator for measuring the impedance between a selected ECG lead and a reference, which may be another of the ECG electrodes, by measuring a level of a signal (voltage or current) detected in response to an application of an AC test signal using electrode drive circuit **110**. The fault detection circuit may also include a threshold detection circuit which determines when a selected electrode impedance is above a predetermined threshold. For a description of an exemplary ECG fault detection circuit see for example U.S. Pat. No. 5,206,602.

[**0055**] A/D converter **58** (FIG. **2**-A) receives filtered signals from drive/signal processing circuit **52**, and generates corresponding digital signals for transmission to digital control logic **60**. In some embodiments, A/D converter **58** may be a 12-bit, multi-channel, low-frequency, low-power device, for example a successive-approximation device or a sigma-delta device. A/D converter **58** is capable of digitizing signals received from multiple sensors, which may be sampled at different rates. A/D converter **58** is chosen so it is capable of digitizing at the maximum aggregate data rate from all sensors. For example, in some embodiments, ECG data is sampled at 256 samples/second, respiration data at 64 samples/second, and acceleration at 16 samples/second, while subject temperature, SpO_2, and heart rate are sampled at 1 sample/second. A/D converter **58** may include a multiplexer connected to multiple analog channels, for selecting a given data channel at a time for digitization. In some embodiments, A/D converter **58** may include a sample-and-hold circuit, which takes a snapshot of an analog signal and holds its value until its corresponding analog-to-digital conversion is completed.

[**0056**] Mode-selection logic **61** is connected to digital control logic **60** and input pins **31**. Mode-selection logic **61** sets an operating mode of digital control logic **60** according to a logic level configuration of a set of mode-selection input pins **31**. Available operating modes include a stand-alone mode, and passive and self-clocked peripheral modes, described in detail below.

[**0057**] Real-time clock **62** (FIG. **2**-A) generates real-time digital time signals, which are transmitted to digital control logic **60**. Real-time clock **62** may also generate date signals. An initial real time and date are set for real-time clock **62** during a system initialization, through digital control logic **60**. In some embodiments, real-time clock **62** remains accurate within 0.01 seconds to 1 second, for example about 0.1 seconds, over 24 hours. In some embodiments, real-time clock **62** may receive periodic base timing signals from the main integrated circuit synchronization clock that provides synchronization clock signals to digital control logic **60** and other components of integrated circuit **30**. In some embodiments, real-time clock **62** receives periodic base timing signals from timing resonator **64**. In some embodiments, timing resonator **64** may be an external quartz crystal such as a 32,768 Hz crystal. In some embodiments, timing resonator **64** may be an on-chip silicon resonator integrated within circuit **30**. For information on integrated MEMS silicon resonators see for example Nguyen et al., "An Integrated CMOS Micromechanical Resonator High-Q Oscillator,"*IEEE J. Solid State Circuits* 34(4):440-455, April 1999, Nguyen, "Transceiver Front End Architectures using Vibrating Micromechanical Signal Processors,"*Dig. of Papers, Topical Meeting on Silicon Monolithic Integrated Circuits in RF Systems,* Sep. 12-14 2001, p. 23-32, Nguyen et al., "Micromachined Devices for Wireless Communications,"*Proc. IEEE* 86(8):1756-1768, August 1998, and

Nguyen, "Frequency-Selective MEMS for Miniaturized Low-Power Communication Devices, *IEEE Trans. Microwave Theory Tech.* 47(8):1486-1503, August 1999.

[0058] Real-time clock **62** includes divider components (e.g. flip-flops, counters) for digitally dividing the received base timing signal to produce a real-time digital signal with a frequency of 1 Hz. For example, a 1-Hz real-time clock signal may be generated by dividing down a 2.097152 MHz integrated circuit synchronization clock signal by $2^{21}=2.097152\times10^6$, using twenty-one flip-flops connected in series. The 1 Hz tick signal is further input to one or more digital counters to generate a real-time digital time stamp transmitted to digital control logic **60**.

[0059] A 1 Hz tick signal has a frequency which is of the same order of magnitude as some physiological frequencies of interest processed by signal processing circuit **52**. Multiples of 1 Hz (e.g. 2, 4, 8 Hz, etc.) generated by a flip-flop divider chain may also be on the same order of magnitude as some physiological frequencies of interest. Preferably, signal processing circuit **52** is substantially unaffected by leakage or noise generated by real time clock **62**. In some embodiments, the effects of real-time clock **62** on signal processing circuit **52** are reduced by physically distancing real-time clock **62** and signal processing circuit **52** along the surface of integrated circuit **30**, for example by placing real-time clock and signal processing circuit **52** along opposite sides of integrated circuit **30**, or on opposite sides of other circuit units. Furthermore, in some embodiments a low-frequency real-time clock tick signal may include softened (e.g. obtuse, trapezoidal) edges, rather than square edges. A de-coupling off-chip capacitor, as well as separate power supplies, may be used in some embodiments to further isolate signal processing circuit **52** from real-time clock **62**.

[0060] Serial interface **66** is connected to digital control logic **60** and real-time clock **62**. Serial interface **66** allows connecting integrated circuit **30** bi-directionally to an external computer, to perform a number of initialization steps and/or to otherwise configure digital control logic **60**. In some embodiments, serial interface **66** may also be used to connect digital control logic **60** to an external microcontroller (e.g. microcontroller **80**, shown FIG. **2**-B).

[0061] Sound/light indicator **42** and event actuator **44** are connected to digital control logic **60**. Digital control logic **60** controls the visual and/or acoustic output of unit **42**, and receives event signals from event actuator **44** for recording. Visual and/or acoustic indicators (e.g. LED blinking or changing color, speaker beeping, playing music or providing a spoken indication) are provided to indicate alterts or error signals, such as error signals indicating an improper positioning of electrodes, or warning signals indicating that monitored physiologic parameters are outside predetermined ranges. In some embodiments, sound/light indicator **42** comprises a speaker and a processing circuit connected to the speaker. The processing circuit may include a D/A converter, low-pass filter, and power amplifier connected in sequence between digital control logic **60** and the speaker.

[0062] Digital control logic **60** is further connected to digital memory **32**. In some embodiments, digital memory **32** may be provided on-chip, integrated within circuit **30**. In some embodiments, digital memory **32** comprises a non-volatile memory such as flash memory card, with a capacity sufficient to store the sensor data of interest over a period of about 24 hours or more. For example, a data rate of 100 samples per second at 2 bytes per sample corresponds to a daily storage requirement of about 17 MB. In such an application, a memory-having a capacity on the order of 32 to 64 MB would allow storing data over several days. Table 1 lists approximate storage requirements (in bytes) for several sampling rates and total storage periods, in a system using a 12-bit A/D converter and 2 bytes per sample.

TABLE 1

	Period		
	24 hours	48 hours	7 days
	Seconds/period		
	86400 seconds	172800 seconds	604800 seconds
100 samples/sec	17.3×10^6 bytes	34.6×10^6 bytes	121.0×10^6 bytes
200 samples/sec	34.6×10^6 bytes	69.1×10^6 bytes	241.9×10^6 bytes
500 samples/sec	86.4×10^6 bytes	172.8×10^6 bytes	604.8×10^6 bytes
1000 samples/sec	172.8×10^6 bytes	345.6×10^6 bytes	1.2×10^9 bytes

[0063] Battery **34** is connected to digital memory **32**, sound/light indicator **42** and integrated circuit **30**. In some embodiments, a DC voltage provided by battery **34** may be on the order of 0.5 V to 9 V. Battery **34** may be coupled to an on-chip charge pump (voltage converter) if an on-chip voltage higher than the voltage provided by battery **34** is needed. In some embodiments, multiple batteries may be connected to digital memory **32**, sound/light indicator **42**, and integrated circuit **30**.

[0064] FIG. **2**-B shows a diagram of part of a physiologic monitoring system **20'** including integrated circuit **30** set in a peripheral mode of operation, according to some embodiments of the present invention. The peripheral mode of operation is particularly suited to bedside or other non-disposable device applications. In a peripheral mode of operation, digital control logic **60** is connected to a microcontroller **80**. In some embodiments, microcontroller **80** is soldered down on a board, and connected to integrated circuit **30** through bonded pins. In some embodiments, microcontroller **80** may be connected to integrated circuit **30** through serial interface **66**, through a special-purpose port of integrated circuit **30**, or through the memory card connector otherwise used to connect a removable memory card to integrated circuit **30**. Microcontroller **80** may be mounted in a socket defined along substrate **36** (FIG. **1**-C). Microcontroller **80** is further connected to a power supply **34'** and to a digital memory **32'**. Digital memory **32'** may include a memory card, a hard disk drive, random access memory (RAM), and/or other types of digital memory. Power supply **34'** may include one or more batteries, as well as a power converter driven by power-line AC current.

[0065] In a peripheral mode, microcontroller **80** handles a number of functions otherwise performed by digital control logic **60**, described in detail below. In some embodiments, a peripheral mode may include two sub-modes: a passive peripheral mode, in which digital control logic **60** is substantially inactive and microcontroller **80** manages most of the low-level functions of integrated circuit **30**; and a

self-clocked peripheral mode, in which digital control logic **60** performs a number of low-level functions described below, and generates hardware interrupts to microcontroller **80** in order to transfer assembled data packets to microcontroller **80** for further processing. The stand-alone (FIG. **2**-A) and peripheral (FIG. **2**-B) modes may be better understood by considering an exemplary configuration and operation of digital control logic **60**.

[**0066**] FIG. **4** shows a diagram of digital control logic **60** according to some embodiments of the present invention. Digital control logic **60** is a finite state machine (FSM). The diagram of FIG. **4** shows an exemplary configuration of functional blocks implementing a functionality of digital control logic **60**. The internal functional blocks of digital control logic **60** are shown in order to facilitate a systematic description of the functionality of digital control logic **60** according to some embodiments of the present invention, and not necessarily to imply required sharp structural boundaries within digital control logic **60**. An engineer may generate a hardware description language (e.g. Verilog, VHDL) description of digital control logic **60** that can be synthesized and implemented into a structure generated by electronic design automation (EDA) software. Such EDA software may partition the functionality of digital control logic **60** in other ways than the exemplary configuration of FIG. **4**.

[**0067**] The functional blocks of digital control logic **60** described below are connected and responsive to mode-selection logic **61** (FIG. **2**-A). The description below will focus on the operation of digital control logic **60** in a stand-alone mode. In a peripheral mode, mode-selection logic **61** disables/bypasses at least some of the functional blocks of digital control logic **60** described below. For clarity, the data acquisition description below focuses on data received from A/D converter **58** (FIG. **2**-A); additional data may be received from digital sensors **46** (FIG. **2**-A).

[**0068**] Digital control logic **60** includes acquisition control logic **120**, initialization logic **122**, condition detection logic **124**, packet assembly and time stamping logic **126** (for brevity, referred to below as packet assembly logic **126**), audio/video output control logic **130**, debounce and switch interface circuitry **132**, and a digital memory interface **134**. In some embodiments, digital control logic **60** is formed by hardwired logic. In some embodiments, digital control logic **60** may include a microcontroller core integrated on a common substrate with the other components of integrated circuit **30**, including the hardwired logic of drive/signal processing circuit **52** (FIG. **2**-A).

[**0069**] Digital memory interface **134** connects digital control logic **60** to digital memory **32** (FIG. **2**-A). In particular, digital memory interface **134** receives time-stamped physiologic data packets from packet assembly logic **126**, and directs the storage of the data packets in digital memory **32**. Digital memory interface **134** may add formatting/file system information to each packet before storage. The formatting information may depend on the file system used to store data in digital memory **32**. In some embodiments, a personal computer, DOS-compatible format such as a FAT16 or FAT32 format is used. Digital memory interface **134** selects a digital memory address for each packet to be stored. In some embodiments, selecting the address includes preventing over-writing data previously written to a removable memory by the present or another monitoring unit, such that the removable memory may be removed and re-inserted in and out of one or more monitoring units without causing substantial loss of data. Digital memory interface **134** determines the address of last-written data, and begins appending subsequent data following the last-written data, while maintaining a validly-formatted file. In some embodiments, digital memory interface **134** may support a single removable digital memory format. In some embodiments, digital memory interface **134** may support multiple removable digital memory formats, and may include pin-settable format selection logic for selecting a memory format to be used.

[**0070**] Initialization logic **122** is connected to serial interface **66** (FIG. **2**-A), real-time clock **62**, drive/signal processing circuit **52**, A/D converter **58**, and to a number of functional blocks of digital control logic **60** described below. In particular, initialization logic **122** is capable of connecting through serial interface **66** to an initialization console before physiologic monitoring system **20** becomes capable of acquiring and/or storing subject data.

[**0071**] FIG. **6**-A shows an exemplary initialization and analysis console **260**, which may be implemented using software running on a general-purpose computer. In some embodiments, console **260** is connected to physiologic monitor **24** during an initialization of physiologic monitor **24**. In some embodiments, console **260** loads authorization data into digital memory **32** while the rest of physiologic monitor **24** is not connected to console **260**, and physiologic monitor **24** is subsequently initialized by retrieving the authorization data from digital memory **32**. In some embodiments, console **260** is also used to generate a physiologic data display **262** after a recording session has ended and data from digital memory **32** has been downloaded to console **260**. In some embodiments, console **260** is provided in a physician's office or other medical facility. Console **260** is also able to connect to an external authorization server **264**.

[**0072**] FIG. **6**-B shows an exemplary structure of initialization console **260** according to some embodiments of the present invention. A digital memory/physiologic monitor access unit **270** controls communications with physiologic monitor **24** and/or digital memory **32** to perform an initialization of physiologic monitor **24** and subsequent downloads of physiologic data. In some embodiments, the initialization and physiologic data download steps described below are performed while only digital memory **32**, without the rest of physiologic monitor **24**, is connected to initialization console **260**. Access unit **270** may then include software and/or a removable digital memory reader allowing access to digital memory **32**. In some embodiments, the described initialization and/or download steps may be performed while integrated circuit **30** and/or microcontroller **80** (FIGS. **2**-A-B) are connected to initialization console **260**. Access unit **270** may then include software and/or a connector for connecting to physiologic monitor **24**.

[**0073**] A server authorization and/or payment verification unit **272** connects initialization console **260** to external authorization server **264** (FIG. **6**-A) over a communications link such as a secure wide area network (e.g. Internet) or telephone connection. Payment verification unit **272** submits to authorization server **264** payment data (e.g. a credit or debit card number, or another payment indication), physi-

ologic monitor identity data (e.g. one or more serial numbers uniquely identifying corresponding non-enabled physiologic monitors) and user identity data (e.g. a user's name) for a set of physiologic monitoring uses. In some embodiments, the payor may be the subject, while in others the payor may be a person or entity different from the subject. The set of paid uses may include the entire set of monitoring uses supported by physiologic monitor **24**, or a subset of the supported monitoring uses. Upon verifying that the user is authorized, for example if a payor has submitted a credit/debit card payment for a set of uses of physiologic monitoring system **20**, authorization server **264** transmits to initialization console **260** a set of authorization and/or other initialization data for physiologic monitor **24**.

[**0074**] In some embodiments, the authorization data includes a device-specific authorization code, as well as other subject- and session-specific authorization data. In some embodiments, a unique device-specific authorization code is required by physiologic monitor **24** in order to render physiologic monitor **24** user-operable to collect physiologic monitoring data, as described below. The authorization code identifies the stored data as originating from an authorized physiologic monitor. The authorization data may be traceable back to an individual physiologic monitor, subject, and payment authorization, in order to facilitate the creation of an audit trail. Initialization console **260** or an external server (e.g. authorization server **264**) may pool large amounts of subject data belonging to different subjects and sessions and identified by unique authorization data. In some embodiments, a correspondence between authorization data and the subject's identity (e.g. name) is maintained remotely on a secure central server, for example in a health care provider's office, in order to protect the subject's privacy and maintain confidentiality even if the data stored in digital memory **32** were accessed by an unauthorized person.

[**0075**] In some embodiments, the authorization data identifies a subset of authorized uses (e.g. enabled sensor subsets), which may be uses that the subject has paid for, and/or uses relevant to a medical condition of the subject. For example, ECG measurements may be enabled for heart patients with arrhythmias, fluid load impedance measurements for patients suffering from congestive heart failure, respiratory impedance measurements for patients for whom respiratory monitoring is desired, and accelerometers for patients whose calorie expenditures are to be monitored or who are at risk of syncope. A number of sensor combinations or subsets may be employed according to desired applications.

[**0076**] A physiologic monitor authorization/configuration unit **274** transmits a set of authorization and/or configuration data to digital memory **32**. The transmitted authorization and configuration data may include an authorization code, a physiologic monitor and/or subject ID, an encryption key identifier (an encryption key itself or other identifying data which may be used to retrieve or generate an encryption key), firmware, configuration settings for a number of components of physiologic monitor **24**, an initial real date and time, audio/visual prompts, reminders and alerts, and other data. The transmitted authorization and configuration data is described in detail below with reference to initialization logic **122** (FIG. **4**). In some embodiments, at least some of the transmitted authorization and/or configuration data may be received from authorization server **264**, and at least some may be generated by authorization/configuration unit **274**.

[**0077**] After physiologic monitor **24** has been used to record subject physiologic monitoring data for a period of time, digital memory **32** is re-connected to console **260** and the recorded data is downloaded to console **260**. A decryption unit **276** (FIG. **6**-B) receives from access unit **270** encrypted physiologic monitoring data recorded by physiologic monitor **24**, and decrypts the data using a decryption key associated with the recording session. The decrypted data is transmitted to a data analysis/visualization unit **278**, which generates physiologic data displays such as display **262** (FIG. **6**-A). In some embodiments, data analysis/visualization unit **278** verifies that received physiologic data was recorded using an authorized physiologic monitor prior to data analysis/visualization. The verification process may include confirming that an authorization code, physiologic monitor ID and/or subject ID are authorized. The verification process may include connecting to authorization server **264**.

[**0078**] On the physiologic monitor side, initialization logic **122** (FIG. **4**) receives an initialization command and/or initialization data from console **260** or digital memory **32**, and directs an initialization sequence in response to the initialization command and/or data, prior to performing physiologic measurements. In some embodiments, to prevent piracy, digital control logic **60** is not user-operable to collect physiologic monitoring data prior to the initialization sequence. In some embodiments, initialization steps include conducting a self-test and calibration sequence, conducting a device authorization sequence, downloading firmware to configure microcontroller **80**, setting operating parameters to enable and/or configure signal processing circuit **52**, digital control logic **60**, and real-time clock **62**, and writing initial configuration data to digital memory **32** if needed.

[**0079**] In some embodiments, initialization logic **122** performs a diagnostic self-test sequence including checking a voltage of battery **34**, testing the ability of digital memory **32** to accept data (e.g. checking whether digital memory **32** is full and is working), checking sensor functioning by performing test measurements and/or fault detection steps for sensors **50***a-b*, checking analog and/or digital circuitry functioning, and storing testing results within integrated circuit **30** or in digital memory **32**. Initialization logic **122** performs a calibration sequence including acquiring calibration data using sensors **50***a-b*, and storing calibration factors in memory, within integrated circuit **30** or in digital memory **32**. The calibration factors include data generated from sensor measurements performed while physiologic monitoring system **20** is not connected to a subject.

[**0080**] In some embodiments, initialization logic **122** performs a device authorization sequence authorizing physiologic monitoring system **20** for a specific use. The device authorization sequence includes retrieving from initialization console **260** or digital memory **32** an authorization code and other authorization data to be associated with recorded physiologic data, and storing the authorization code and other authorization data in digital memory **32** and/or within digital control logic **60** if needed. As described above, in some embodiments initialization console **260** pre-loads digital memory **32** with authorization and/or configuration data, while digital memory **32** is removed from physiologic

monitor **24**; in such embodiments, initialization logic **122** retrieves the authorization data from digital memory **32**. In some embodiments, the authorization data may be retrieved by initialization logic **122** directly from initialization console **260**.

[**0081**] In some embodiments, initialization logic **122** renders physiologic monitor **24** operable to record physiologic data only if a predetermined, physiologic-monitor-specific authorization code is received. In particular, in some embodiments, a part of a programmable logic array forming part of initialization logic **122** is programmed at manufacture to include authorization code detection logic which responds only to a device-specific authorization code, and permits activation of physiologic monitor **24** if the correct authorization code is received.

[**0082**] In some embodiments, the authorization data may include or otherwise identify an encryption key to be used by packet assembly logic **126** to encrypt physiologic data before storage in digital memory **32**. In some embodiments, the authorization data identifies a decryption key suitable for decrypting the physiologic data stored in digital memory **32**. Such a decryption key identification may be provided to physiologic data analysis software, together with physiologic data stored in digital memory **32**, for analysis after a recording session has ended.

[**0083**] In some embodiments, if a user has been determined to be authorized, initialization logic **122** retrieves from digital memory **32** or initialization console **260**: firmware for microcontroller **80** (FIG. **2**-B), configuration settings for digital control logic **60**, and filter coefficients, topologies and/or state machine instructions for filtering circuit **118** if filtering circuit **118** includes DSP circuitry. In particular, microcontroller **80**, digital control logic **60** and filtering circuit **118** may be operational only in a test mode or non-operational upon manufacture, and are only enabled to perform physiologic monitoring operations upon initialization. Digital control logic **60** may include a blank (re)programmable logic array that is only programmed during system initialization. For example, some logic functions of digital control logic **60** may be implemented using EEPROM or flash memory. In some embodiments, all of part of acquisition control logic **120**, condition detection logic **124**, and packet assembly/time stamping logic **126** (FIG. **4**) may include parts of (re)programmable logic array. The firmware download and digital control logic and filtering circuitry programming provide additional piracy protection, since microcontroller **80** and integrated circuit **30** become capable of acquiring physiologic data only upon authorization by the initialization console. Allowing programming of parts of digital control logic **60** also facilitates future design changes.

[**0084**] Initialization logic **122** receives an initial time/date setting from initialization console **260**, and uses the received initial time/date setting to set a current time/date for real-time clock **62** (FIG. **2**-A). Setting configuration parameters for signal processing circuit **52** and digital control logic **60** may include setting sampling rates and enabling operating features. Enabling operating features may include defining an enabled sensor set and/or sensing operations (e.g. impedance sensing operations) to be performed by signal processing circuit **52** and digital control logic **60**. An enabled sensor set may specify which sensor types or subsets (e.g. which ECG leads or other sensor types) are enabled for the authorized use. Different operating features and/or sampling rates may be enabled or set for different applications: for example, higher sampling rates may be used for monitoring the training of an elite athlete than for routine monitoring of an elderly patient or for veterinary uses. If filtering circuit **118** (FIG. **3**-A) includes digital signal processing (DSP) circuitry, setting configuration parameters for signal processing circuit **52** may include programming filter coefficients, topologies, and/or state machine instructions to customize and render operable signal processing circuit **52** upon initialization.

[**0085**] Initial configuration data written to digital memory **32** may include an authorization code, described above, as well as a physiologic monitor and/or subject ID. In some embodiments, initial configuration data written to digital memory **32** includes configuration parameters (e.g. enabled operating features, sampling rates) for signal processing circuit **52** and digital control logic **60**. Initial configuration data written to digital memory **32** may further include customized audio/visual alarms, prompts, and reminders to be played back to the user, as well as configuration settings for the stored audio/visual data. Audio prompts may include spoken reminders to take medicines, to remove monitoring unit **20** and/or digital memory **32** when digital memory **32** is full or when a programmed recording session is over, and indications of sensor faults or physiologic parameter conditions (e.g. a warning of a high measured heart rate, or praise for meeting a target exercise heart rate). In some embodiments, audio prompts are recorded using a voice such as the voice of the subject, a family member, a medical professional (e.g. the subject's family doctor or a familiar nurse), a public personality (e.g. an actor or professional athlete), a simulated famous person, or a cartoon character. In some embodiments, programmed speech data includes data personalized with both the user's identity, and with a number of speech messages tailored to a sensor subset or application. For example, if the user's name is Bob, and if Bob's physiologic monitor uses a set of ECG leads, programmed speech data may include a phrase such as "Bob, a lead has fallen off!" Audio prompts may also include music and/or sound effects. In some embodiments, configuration settings for the stored audio/visual data include audio volume configuration data causing the volume of audio output to be softer at predetermined times (e.g. during traditional sleep hours), or louder for patients who are hard of hearing.

[**0086**] Acquisition control logic **120** includes logic controlling the operation of A/D converter **58** and signal processing circuit **52** (FIG. **2**-A) according to a number of configuration parameters, including parameters defining the analog signals to be processed and their sampling rates. In embodiments in which signal processing circuit **52** uses analog circuitry, acquisition control logic **120** mainly handles the timing of A/D converter **58**. In particular, acquisition control logic **120** sends selection signals to a multiplexer of A/D converter **58**, to determine which of multiple analog signals is to be digitized. If A/D converter **58** includes a sample-and-hold circuit, acquisition control logic **120** sends hold pulses or sets hold logic levels to direct the sample-and-hold circuit to hold given analog signals. Acquisition control logic **120** further sends digitization commands to A/D converter **58**, directing A/D converter **58** to digitize data from a given signal channel. For example, if A/D converter **58** is a successive approximation device,

acquisition control logic **120** may send a start digitization signal to A/D converter **58** to begin digitization of a sample. In some embodiments, a sample is considered ready following a predetermined number of synchronization clock cycles after its digitization start. In some embodiments, a sample is considered ready when a sample ready signal is received from A/D converter **58**.

[**0087**] In embodiments in which signal processing circuit **52** uses switched capacitor signal processing, acquisition control logic **120** may additionally provide a clock signal or signals to filter elements of signal processing circuit **52**. Hardwired logic within signal processing circuit **52** of acquisition control logic **120** may be used to provide desired switching frequencies to the filtering elements of signal processing circuit **52**.

[**0088**] In embodiments in which signal processing circuit **52** uses digital signal processing, acquisition control logic **120** may additionally be used to route a continuous sample stream to different filter channels, load and/or recirculate filter coefficients and resulting intermediate data, and carry out inter-lead calculations such as deriving augmented ECG lead signals by performing algebraic combinations of standard ECG lead signals.

[**0089**] Condition detection logic **124** receives signals from A/D converter **58**, signal processing circuit **52**, and real-time clock **62**, and detects whether predetermined physiologic conditions, real-time conditions, and/or sensor faults or other conditions have occurred. Condition detection logic **124** may also be used to control electrode drive circuit **110** (FIG. **3**-A) to apply AC fault detection signals to selected ECG electrodes. ECG lead fault detection steps may be performed after an initial placement of the ECG electrodes on the subject, and at periodic intervals thereafter. In some embodiments, condition detection logic **124** determines whether a measured impedance between a selected ECG lead and a reference (e.g. another ECG lead) exceeds a predetermined threshold. In some embodiments, condition detection logic **124** determines whether physiologic data received from A/D converter **58** (e.g. a measured subject temperature or heart rate, measured ionizing radiation levels, estimated calorie expenditures derived from accelerometer data) are outside predetermined ranges or otherwise meet predetermined conditions. In some embodiments, condition detection logic **124** determines whether a current real time and a measured ambient light level meet predetermined conditions (e.g. have predetermined values, or are lower or higher than predetermined values). Condition detection logic **124** sends condition indicators, which may include indicators of fault or other condition types, to audio/video output control logic **130** and to packet-assembly logic **126**. For example, when an estimated calorie expenditure during an exercise period has exceeded 300 calories, condition detection logic **124** may send a corresponding condition indicator to output control logic **130** in order to provide encouragement to the subject. When a real time is sufficiently late and/or a detected ambient light level is sufficiently low, condition detection logic **124** may send a quiet-volume indicator to output control logic **130**, in order to lower the volume or mute audio indicators. For ECG data, a sensor fault may include an indicator that one or more ECG leads have fallen off or are not connected properly. The fault indicators may be used by audio/video output control logic **130** to generate audio and/or visual warnings to a user. The condition indicators may be used by packet assembly logic **126** to include condition-detection flags in corresponding data packets, as described below.

[**0090**] Packet-assembly logic **126** receives data streams corresponding to different physiologic data types from A/D converter **58** and digital sensors **46**, and real-time indicators from real-time clock **62** (FIG. **2**-A). The data streams are received at different rates. Packet-assembly logic **126** assembles the received data into formatted packets for transmission to memory interface **134**, to be stored into digital memory **32** (FIG. **2**-A). Packet-assembly logic **126** includes one or more buffers for storing assembled data before transmission to memory interface **134**. Each packet sent to memory interface **134** includes a set of physiologic data of interest, a set of data types, associated time stamps, and a fault detection flag.

[**0091**] In some embodiments, packets are stored in digital memory **32** at regular intervals, for example one packet every second. A packet may include physiologic data of different types, sampled at different rates. For example, an exemplary packet stored every second may include 512 ECG samples (256 samples per second for 2 leads), 64 respiratory impedance samples, 48 acceleration samples (16 each of 3 axes), and other samples such as one or two SpO_2 samples, an event marker, and light, acoustic, ionizing radiation, and joint-angle goniometer samples. The ECG samples may be 12-bit samples, while other samples may be 8-bit samples. Together with time stamp and formatting data, such an exemplary packet may include on the order of a thousand bytes.

[**0092**] FIG. **5** shows the contents of an exemplary physiologic data packet **200** according to some embodiments of the present invention. Packet **200** includes a formatting field **202**, a time-stamp field **206**, an ECG data field **212** including multiple ECG data samples **216**, other physiologic data fields **220**, **224**, **230**, **232**, and an event marking and fault detection field **234**.

[**0093**] In some embodiments, each stored packet is time-stamped by including a real-time indicator in the packet. In some embodiments, at least some of the packets need not include stored time-stamps; rather, the time of each packet can be extracted from its ordered position relative to a time-stamped packet. For example, if an initial packet is time-stamped with an initial real time, and one packet is stored every second, a 10th packet following the initial packet can be associated with a real-time of 10 seconds following the initial real time. In some embodiments, a time stamp is inserted into any packet that includes an indicator of an external event signaled using event actuator **44** (FIG. **2**-A). In some embodiments, asynchronous events such as external event markers are marked by inserted flags, rather than explicit time-stamps. In some embodiments, time-stamps are inserted periodically in the packet sequence. In some embodiments, a time-stamp is inserted in a final packet any time recording is paused or ended, and in a first packet any time recording is started or resumed.

[**0094**] In some embodiments, packet assembly logic **126** or memory interface **134** may include encryption logic for encrypting physiologic monitoring data prior to storage in digital memory **32**. The encryption logic may implement a cipher such as a symmetric key cipher (e.g. RC4, AES), or a public-key cipher (e.g. RSA).

[0095] Audio/video output control logic **130** generates driving signals for light/sound indicator **42** (FIG. **2**-A), in response to trigger signals received from condition detection logic **124** and digital memory **32**, and in response to real-time data received from real-time clock **62**. In some embodiments, A/V output control logic **130** comprises audio decoding logic capable of decoding audio (e.g. speech) data stored in digital memory **32**. Speech data may be programmed in digital memory **32** during a system initialization, which may include steps such as setting the system real-time clock. In some embodiments, A/V output control logic **130** comprises logic configured to compare locally-stored time reference values to real-time data received from real-time clock **62**, and to generate driving signals when pre-set comparison conditions are met (e.g. every N minutes or hours, or at predetermined times/dates). A/V output control logic **130** sends decoded digital signals to a digital-to-analog converter (DAC), which may be provided as part of integrated circuit **30** or light/sound indicator **42**.

[0096] The driving signals generated by A/V output control logic **130** may include signals driving light/sound indicator **42** to flash an LED or change the LED display color, generate beeps, play music, or play digitized or synthesized voice prompts. Data used to generate the driving signals may include data hard-coded within integrated circuit **30** and/or data stored in digital memory **32**. In some embodiments, A/V output control logic **130** checks for a value of a digital speech flag in digital memory **32**. If the flag is set to an enabled value, A/V output control logic **130** retrieves the speech for transmission to light/sound indicator **42**. The digital speech flag is set during the system initialization.

[0097] Debounce and switch interface circuitry **132** receives external, analog event signals from event actuator **44** (FIGS. **2**-A-B), and generates a clean digital event marker signal. The event marker signal is transmitted to packet assembly logic **126** for assembly into an associated packet. In some embodiments, debounce and switch interface circuitry **132** may be external to digital control logic **60**.

[0098] If integrated circuit **30** is configured in a stand-alone mode, the various parts of digital control logic **60** described above are active. If integrated circuit **30** is configured in a peripheral mode, at least some of the parts of digital control logic **60** are bypassed/disabled. In a self-clocked peripheral mode, packet assembly logic **126** generates a hardware interrupt to microcontroller **80** when an assembled data packet is ready. In the self-clocked peripheral mode, digital control logic **60** transfers data to microcontroller **80** for further processing and/or storage, rather than directly to digital memory **32**. Microcontroller **80** receives the assembled data packets, performs further processing on the data, and stores resulting data in a digital memory. In a passive peripheral mode, microcontroller **80** (FIG. **2**-B) performs the functions described above for digital control logic **60**, and digital control logic **60** is essentially disabled/bypassed. For example, in the passive peripheral mode, microcontroller **80** may provide synchronization timing signals to real-time clock **62**, supply digitized speech data to light/sound indicator **42**, control the timing of A/D converter **58**, control drive/signal processing circuit **52** to generate signals used for impedance measurements and fault detection.

[0099] In some embodiments, an initialization sequence as described above is performed according to the operating mode of integrated circuit **30**. In particular, if integrated circuit **30** is configured in a stand-alone mode, in some embodiments the initialization sequence may not include downloading firmware for microcontroller **80**. If integrated circuit **30** is configured in a passive peripheral mode, the initialization sequence may not include configuring digital control logic **60**. If integrated circuit **30** is configured in a self-clocked peripheral mode, the initialization sequence may include both downloading firmware for microcontroller **80** and programming a programmable logic array within digital control logic **60**.

[0100] In some embodiments, if integrated circuit **30** is configured in a peripheral mode, an initialization sequence as described above may be performed according to communications between microcontroller **80** and initialization console **260** (FIG. **6**), while initialization logic **122** (FIG. **4**) remains inactive. Microcontroller **80** may be connected to initialization console **260**, placed in a circuit program mode, and the entire operating firmware for microcontroller **80** may be downloaded to internal memory or digital memory **32**. Prior to initialization, microcontroller **80** may be blank, in order to make firmware piracy more difficult. After the initial programming, microcontroller **80** may allow changes to physiologic monitor configuration parameters such as enabled sensor set, sampling rates, real time, encryption key, authorization codes, subject/device IDs, voice/sound prompts, and other customization data stored in digital memory **32** or microcontroller **80**, while disallowing changes to the firmware.

[0101] In some embodiments, initialization/configuration sequences as described above may be used in physiologic monitors comprising a microcontroller and connected discrete components. Such initialization sequences may be used in physiologic monitors that do not include digital control logic and other components as described above.

[0102] FIG. **7** shows a wearable physiologic monitor system **520** including a wearable display **90** connected to a wearable physiologic monitor **524** through a short-range wireless connection, according to some embodiments of the present invention. Display **90** may be worn by a subject on his/her wrist, and may include or form part of a watch capable of displaying a real time. The short-range wireless connections may be implemented using a standard such as a Class 2 (2.5 mW) Bluetooth specification, allowing connections over a distance of 10 meters. Alternatively, a wired connection may be used to minimize cost or unwanted RF radiation.

[0103] FIG. **8** is a diagram of physiologic monitor **524** according to some embodiments of the present invention. Physiologic monitor **524** includes an integrated circuit **530** connected to an off-chip wireless interface **568**. Wireless interface **568** may be connected to or include a wireless antenna, which is used to couple interface **568** to display **90**. Wireless interface **568** is connected to digital control logic **560**. Digital control logic **560** may include wireless packet assembly logic assembling physiologic data packets for transmission to display **90**. The display data may include a subset of the sensor data types stored in digital memory **32**, and may be sent to wireless interface **568** at more frequent or less frequent time intervals than the data packets stored in digital memory **32**.

[0104] FIG. **9** shows an exemplary display **90** showing recorded real-time, time-dependent physiologic data accord-

ing to some embodiments of the present invention. Display **90** presents to a user indications of several physiologic parameters determined by physiologic monitor **524** (FIG. **7**), including a heart rate display **304**, a current subject body temperature display **308**, and a current subject blood oxygen level **310**, among others. Display **90** also presents a real-time indicator **312** and a current date indicator **316**. In some embodiments, display **90** may receive and display a time-dependent signal waveform or trend, such as a current ECG waveform covering a few seconds, or a heart rate plot sampled once a minute over one hour.

[**0105**] According to one aspect, preferred systems and method described above allow producing a compact, low-cost, wearable multi-parameter physiologic monitor. Such a monitor may include a disposable patch encapsulating physiologic sensors, a processing integrated circuit, and sensor interconnections. Signal processing circuitry, a real-time clock, an A/D converter, an I/O port, a digital memory interface, and digital control logic are integrated on a single integrated circuit, which provides signal conditioning, time-stamping, multi-data-rate stream processing, and data packet assembly for storage in a removable digital memory such as a flash memory card. Using an application-specific integrated circuit (ASIC) including integrated special-purpose signal conditioning circuitry and digital control logic, rather than a programmable microcontroller and discrete front-end circuitry, allows producing a compact, power-efficient physiologic monitoring patch than can be readily made disposable. Storing the data in a removable digital memory also allows a simplified integrated circuit design, allowing device portability without requiring relatively-complex, power-consuming wireless transmission circuitry. The digital memory may be reused with multiple physiologic monitoring patches, while the wearable patch and its incorporated sensors and ASIC may be discarded at regular intervals, e.g. every 24 hours.

[**0106**] According to one aspect, the same physiologic monitor and incorporated integrated circuit design may be used in multiple-modes, each of which may be selected upon manufacture of the physiologic monitor. In a stand-alone mode, the physiologic monitor digital control logic performs time-stamping and packet assembly, and stores data to the digital memory. The stand-alone mode is particularly suited to applications in which portability, disposability, and low-cost are of primary concern. In a set of peripheral modes, the monitor digital control logic is used in conjunction with a microcontroller, which may be mounted on the subject or disposed nearby (e.g. in a bedside, larger unit). Using a programmable microcontroller allows greater flexibility in the data processing performed, but reduces the portability and increases the cost of the monitoring system. The peripheral modes are particularly suited to more stable environments, for example for in-hospital, bedside uses. In a passive peripheral mode, the physiologic monitor digital control logic is essentially bypassed, and the microcontroller performs operations such as control of an A/D converter, time-stamping, and packet assembly. In a self-clocked peripheral mode, the physiologic monitor digital control logic sends hardware interrupts to the microcontroller to periodically transfer time-stamped, assembled data packets to the microcontroller. Allowing a single integrated circuit design to be used in multiple modes allows sharing common design and fixed costs for both simpler standalone applications and more complex, bedside applications. For such bedside applications, the integrated circuit effectively acts as a signal processing front end for a programmable microprocessor such as a microcontroller.

[**0107**] According to another aspect, an initialization sequence, initialization logic and initialization console, as well as other aspects described above may be used in physiologic monitoring systems using discrete components for signal conditioning circuitry and digital control logic, rather than systems using an integrated circuit as described above. According to another aspect, such an initialization approach may be used to initialize a microcontroller rather than hardwired digital control logic, for example in a system configured in a peripheral mode, or in a system otherwise using a programmable microcontroller. In such a system, an initialization sequence may be implemented using initialization software running on the microcontroller. The authenticated firmware-download aspects described above are of particular significance in a system using a microcontroller. According to another aspect, such an initialization approach may be used in a system using a fixed digital memory. In some embodiments, such an initialization approach allows flexible customization and monetization of a common design for different uses in the field, for example in a doctor's office, and allows reducing device piracy.

[**0108**] According to another aspect, exemplary circuitry as described above may be used in a wearable physiologic monitoring system including a case or other structure loosely attached to a subject (e.g. worn inside clothing, or hanging from the subject), rather than a patch adhered to the subject.

[**0109**] According to anther aspect, the present invention provides computer-readable media encoding instructions, and computer systems programmed with instructions to perform the initialization and/or configuration steps described above, as well as other physiologic monitoring steps.

[**0110**] According to another aspect, the present invention provides a kit comprising a reusable, removable digital memory and a plurality of disposable, wearable physiologic monitors as described above. For example, one digital memory may be provided together with 7 or 10 disposable physiologic monitors, each to be used by a subject for one day. The physiologic monitors provided in the kit are blank or otherwise user-inoperable to record subject physiologic data. The digital memory is pre-loaded with subject-specific physiologic monitor authorization and configuration data. The pre-loading may be performed for example in a physician's office, using an initialization console as described above, and according to subject-specific monitoring requirements. Connecting a blank physiologic monitor to the removable digital memory causes an activation and configuration of the physiologic monitor as described above. The activation results in the monitor becoming user-operable to record physiologic monitoring data. Subsequently, recorded physiologic monitoring data is stored in the removable digital memory.

[**0111**] According to some embodiments, a physiologic monitoring system as described above is employed in a long-term, patient-administered method of providing titration of care for a chronic disease, for which a compact, low-cost design as described above is of particular benefit. In an exemplary method, a physician issues one or more

physiologic monitoring devices as described above to a patient in a first treatment state. The first treatment state may be a state in which the patient undergoes no treatment, or a state in which the patient undergoes a course of treatment, e.g. takes a particular medication. The patient uses the monitor(s) to record and store physiologic monitoring parameters over a period of days, weeks, or months, during a period of normal activity of the subject outside a medical facility. Such physiological monitoring may include detection of normal subject activity and physiologic parameters, as well as detection of less-common episodes such as syncope (fainting) or arrhythmias. Detected physiologic parameters may include the parameters described above, as well as parameters derived from measured data. For example, patient calorie expenditures due to physical activity may be estimated from recorded accelerometer data, while patient heart failure progression can be estimated using fluid load impedance measurements. Generating the data need not require the patient's return to a medical facility. Quantitative data generated over a period of time is used in conjunction with other data, including pre-treatment baseline data, to evaluate the effect of treatment on the patient, and to alter the course of therapy (e.g. medication dosages). New data for the altered course of therapy are then recorded. Quantitative data generated by different courses of treatment are then compared.

[0112] Quantitative data evaluation may include monitoring a time-dependence of relevant parameters as a course of treatment proceeds, comparing such measured parameters to pre-treatment baseline data, and evaluating effects of treatment changes on measured parameters. In some embodiments, quantitative data evaluation may include one or more of: comparing data during after/therapy to a pre-treatment baseline; comparing two or more medications or other treatments to each other; comparing two or more medications or other treatments to a pre-treatment baseline; comparing different dosages of one or more medications or other treatments, alone or in combination, to each other and/or to a pre-treatment baseline; comparing different combinations of medications or other treatments; evaluating non-medication treatment parameters, such as settings of implantable devices (e.g. pacemakers); evaluating implantable device settings in combination with one or more medications; comparing data recorded before and after surgical procedures. The preferred physiologic designs described above are particularly suited for such methods, and in particular for long-term (over weeks or months) tracking of patients' health by performing quantitative evaluations as described above.

[0113] Commonly available physiologic monitors such as Holter monitors are normally too complex and costly to permit convenient, widespread distribution of such monitors to patients for self-use outside of medical facilities. Qualitative evaluations by a patient (e.g. statements such as "I feel fine") are not particularly useful for evaluating subtle effects of medications or other treatment on the patient. A subject may go about his or her normal daily routines while data is recorded, and return to a physician's office at intervals spaced apart over a period of days or weeks to allow a physician to download stored physiologic data, perform a quantitative evaluation of the course of treatment according to the downloaded data, and adjust the course of treatment according to the evaluation.

[0114] According to another aspect, the basic physiologic monitor integrated circuit design supports multiple sensor types. The same physiologic monitor design may be used with multiple, different sensor subsets, as needed in a particular application, by enabling a desired sensor subset during the physiologic monitor manufacture or during an initialization of the physiologic monitor through an I/O (e.g. serial) port.

[0115] For more sophisticated data analysis, the digital memory may be removed from the physiologic monitor and connected to a personal computer or other device including a general-purpose CPU and associated analysis software. For example, a computer screen may be used to visualize data-intensive sensor displays such as time-dependent ECG traces.

[0116] In some embodiments, wireless transmission circuitry may be added to the physiologic monitor and connected to the data processing integrated circuit in order to provide a short-range connection to a wearable display unit. Adding wireless transmission circuitry to the physiologic monitor can add significant complexity, power losses, and noise to the system. Thus, a presently preferred implementation does not include wireless transmission circuitry.

[0117] Noise is of particular concern in systems measuring subject ECG signals, which may be on the order of 1 mV full-scale, and include frequencies of interest on the order of Hz. In addition to generally-present noise sources such as power lines, microwave and wireless sources, and electrolytic effects at the subject's skin, an integrated circuit designed as described above may also be affected by noise from an on-chip real-time clock tick signal or its harmonics. The effects of such noise on physiologic signal processing circuitry is preferably minimized by physically separating the real-time clock from the physiologic signal processing circuitry on opposite areas of a common substrate, and/or softening edges of a real-time tick signal, among others.

[0118] An integrated temperature sensor is also potentially subject to noise or extraneous inputs due to power losses from the integrated circuit itself, rather than heat emissions from the subject's skin. To minimize such noise sources, it is preferable to minimize the power losses from the integrated circuit, as well as optimize the thermal coupling between the temperature sensor and the subject.

[0119] It will be clear to one skilled in the art that the above embodiments may be altered in many ways without departing from the scope of the invention. For example, a physiologic monitoring system as described above may include some asynchronous circuitry or logic. In some embodiments, various connections may be used to connect a physiologic monitor to an external computer or microcontroller, including wired (e.g. serial, USB, parallel) and wireless (optical, RF) connections. Accordingly, the scope of the invention should be determined by the following claims and their legal equivalents.

What is claimed is:

1. A physiologic monitoring method comprising:

storing a set of physiologic monitor configuration data in a removable digital memory;

employing a wearable physiologic monitor including the removable digital memory to perform a set of physi-

ologic measurements according to the configuration data on a subject wearing the physiologic monitor; and

storing digital physiologic data generated by the set of physiologic measurements in the removable digital memory.

2. The method of claim 1, wherein the set of physiologic measurements includes a set of electrocardiogram measurements.

3. The method of claim 1, wherein the set of physiologic measurements includes a set of acceleration measurements.

4. The method of claim 1, wherein the set of physiologic measurements includes a set of measurements selected from respiratory impedance measurements and fluid load impedance measurements.

5. The method of claim 1, wherein the configuration data comprises an indicator of an enabled sensor subset selected from a set of sensors supported by the physiologic monitor.

6. The method of claim 1, wherein the configuration data includes a set of sampling rates for a set of physiologic monitor sensors.

7. The method of claim 1, further comprising storing a subject identifier in the removable digital memory.

8. The method of claim 1, further comprising storing in the removable digital memory an identifier of a payment transaction for a use of the physiologic monitor.

9. The method of claim 1, further comprising storing in the removable digital memory an encryption key to be used by the physiologic monitor to encrypt the digital physiologic data.

10. The method of claim 1, further comprising:

employing the physiologic monitor to perform a diagnostic self-test; and

storing a set of diagnostic self-test results in the removable digital memory.

11. The method of claim 10, wherein performing the diagnostic self-test includes performing a test selected from a physiologic monitor battery test, a removable digital memory test, and a physiologic monitor circuit test.

12. The method of claim 1, further comprising:

generating a set of calibration factors for the physiologic monitor; and

storing the calibration factors in the removable digital memory.

13. The method of claim 1, further comprising storing a set of subject feedback data in the removable digital memory.

14. The method of claim 13, wherein the subject feedback data includes a voice message to be played back by the physiologic monitor.

15. The method of claim 14, wherein the voice message is customized according to an identity of the subject.

16. The method of claim 14, wherein the voice message comprises a reminder for the subject to perform an action.

17. The method of claim 14, wherein the voice message comprises a reminder for the subject to take a medication.

18. The method of claim 14, wherein the voice message comprises an alert indicating that a subject physiologic parameter value determined by the physiologic monitor meets a predetermined condition.

19. The method of claim 14, wherein the voice message comprises an alert indicating a fault condition for a sensor of the physiologic monitor.

20. The method of claim 14, wherein the voice message comprises an alert indicating a condition of the removable digital memory.

21. The method of claim 13, wherein the subject feedback data includes audio volume customization data for a physiologic monitor speaker.

22. The method of claim 21 wherein the audio volume customization data includes data setting a dependence of a volume of the physiologic monitor speaker on a current time.

23. The method of claim 21 wherein the audio volume customization data includes data setting a dependence of a volume of the physiologic monitor speaker on a current ambient light intensity measured by the physiologic monitor.

24. The method of claim 1, comprising connecting the removable digital memory to an initialization console to store the set of physiologic monitor configuration data in the removable digital memory while the physiologic monitor is not connected to the initialization console.

25. The method of claim 1, further comprising employing the removable digital memory sequentially in a plurality of disposable, wearable physiologic monitors to configure each of the plurality of physiologic monitors and to store digital physiologic data recorded by each of the plurality of physiologic monitors.

26. A wearable physiologic monitoring system comprising:

a wearable physiologic monitor comprising a set of physiologic sensors, signal conditioning circuitry connected to the sensors, and digital control logic connected to the signal conditioning circuitry; and

a removable digital memory connected to the digital control logic and storing physiologic monitor configuration data for configuring a set of physiologic sensing operations performed by the physiologic monitor, and subject physiologic monitoring data recorded by the physiologic monitor.

27. A physiologic monitoring method comprising:

storing a set of physiologic monitor authorization data in a removable digital memory;

transitioning a wearable physiologic monitor from an un-initialized state to an initialized state using the physiologic monitor authorization data stored in the removable digital memory, wherein the physiologic monitor in the un-initialized state is not user-operable to record a set of physiologic monitoring data from a subject, and wherein the physiologic monitor in the initialized state is user-operable to record the set of physiologic monitoring data from the subject;

employing the physiologic monitor including the removable digital memory to record the set of physiologic monitoring data on the subject wearing the physiologic monitor; and

storing the set of physiologic monitoring data in the removable digital memory.

28. A physiologic monitoring kit comprising:

a removable digital memory storing a set of physiologic monitor authorization data and configured to receive a set of physiologic monitoring data; and

a plurality of disposable, wearable physiologic monitors in an un-initialized state;

wherein each physiologic monitor is configured to connect to the removable digital memory and to transition from the un-initialized state to an initialized state upon receiving the physiologic monitor authorization data from the digital memory, wherein each physiologic monitor in the un-initialized state is not user-operable to record the set of physiologic monitoring data from a subject, and wherein each physiologic monitor in the initialized state is user-operable to record the set of physiologic monitoring data from the subject.

29. A physiologic monitoring method comprising:

upon verifying that a subject's use of a wearable physiologic monitor is authorized, employing an initialization console to perform an activation of the physiologic monitor, wherein the activation transitions the physiologic monitor from a un-initialized state to an initialized state, wherein the physiologic monitor in the un-initialized state is not user-operable to perform a set of physiologic measurements, wherein the physiologic monitor in the initialized state is user-operable to perform the set of physiologic measurements; and

using the physiologic monitor to perform a set of physiologic measurements on the subject and store digital physiologic data generated by the physiologic measurements in a digital memory of the physiologic monitor.

30. The method of claim 29, wherein the set of physiologic measurements includes a set of electrocardiogram measurements.

31. The method of claim 29, wherein the set of physiologic measurements includes a set of acceleration measurements.

32. The method of claim 29, wherein the set of physiologic measurements includes a set of measurements selected from respiratory impedance measurements and fluid load impedance measurements.

33. The method of claim 29, wherein performing the activation comprises transferring from the initialization console to the physiologic monitor a set of firmware code enabling the physiologic monitor to perform the set of physiologic measurements.

34. The method of claim 29, wherein performing the activation comprises programming at least part of a programmable logic array of the physiologic monitor.

35. The method of claim 29, wherein performing the activation comprises enabling the physiologic monitor to record data sensed by a subset of a set of sensors supported by the physiologic monitor.

36. The method of claim 29, further comprising employing the initialization console to store a subject identifier in the digital memory.

37. The method of claim 29, further comprising employing the initialization console to store in the digital memory an identifier of a payment transaction for the subject's use of the physiologic monitor.

38. The method of claim 29, further comprising storing in the digital memory an encryption key to be used by the physiologic monitor to encrypt the digital physiologic data.

39. The method of claim 29, further comprising employing the initialization console to store a set of subject feedback data in the digital memory.

40. The method of claim 39, wherein the subject feedback data includes a voice message to be played back by the physiologic monitor.

41. The method of claim 40, wherein the voice message is individually customized according to an identity of the subject.

42. The method of claim 40, wherein the voice message comprises a reminder for the subject to perform an action.

43. The method of claim 40, wherein the voice message comprises a reminder for the subject to take a medication.

44. The method of claim 40, wherein the voice message comprises an alert indicating that a subject physiologic parameter value determined by the physiologic monitor meets a predetermined condition.

45. The method of claim 40, wherein the voice message comprises an alert indicating a fault condition for a sensor of the physiologic monitor.

46. The method of claim 40, wherein the voice message comprises an alert indicating a condition of the digital memory.

47. The method of claim 39, wherein the subject feedback data includes audio volume customization data for a physiologic monitor speaker.

48. The method of claim 47 wherein the audio volume customization data includes data setting a dependence of a volume of the physiologic monitor speaker on a current time.

49. The method of claim 47 wherein the audio volume customization data includes data setting a dependence of a volume of the physiologic monitor speaker on a current ambient light intensity measured by the physiologic monitor.

50. A physiologic monitor initialization console comprising:

a server authorization unit for connecting to an authorization server over a wide area network to verify that a subject's use of a wearable physiologic monitor is authorized; and

a physiologic monitor authorization unit connected to the server authorization unit, for performing an activation of the physiologic monitor upon verifying that the subject's use of the wearable physiologic monitor is authorized, wherein the activation transitions the physiologic monitor from a un-initialized state to an initialized state, wherein the physiologic monitor in the un-initialized state is not user-operable to perform a set of physiologic measurements, wherein the physiologic monitor in the initialized state is user-operable to perform the set of physiologic measurements.

51. A physiologic monitoring method comprising:

receiving a set of authorization data for a wearable physiologic monitor, the authorization data identifying a subset of authorized monitoring uses of the physiologic monitor selected from a set of monitoring uses supported by the physiologic monitor; and

in response to receiving the authorization data, programming the physiologic monitor to enable the subset of authorized uses.

52. A physiologic monitoring method comprising:

upon verifying that a subject's use of a wearable physiologic monitor is authorized, employing an initialization console to perform a configuration of the physiologic monitor, wherein the configuration defines a set

of physiologic sensing operations to be performed by the physiologic monitor; and

using the physiologic monitor to perform a set of physiologic measurements on the subject and store digital physiologic data generated by the physiologic measurements in a digital memory of the physiologic monitor.

53. The method of claim 52, wherein the set of physiologic measurements include a set of electrocardiogram measurements.

54. The method of claim 52, wherein the set of physiologic measurements include a set of acceleration measurements.

55. The method of claim 52, wherein the set of physiologic measurements include a set of measurements selected from respiratory impedance measurements and fluid load impedance measurements.

56. The method of claim 52, wherein performing the configuration comprises specifying an enabled sensor subset selected from a set of sensors supported by the physiologic monitor.

57. The method of claim 52, wherein performing the configuration comprises setting a set of sampling rates for a set of physiologic monitor sensors.

58. The method of claim 52, wherein performing the configuration comprises transferring from the initialization console to the physiologic monitor a current real-time for setting a real-time clock of the physiologic monitor.

59. The method of claim 52, further comprising employing the initialization console to store a subject identifier in the digital memory.

60. The method of claim 52, further comprising employing the initialization console to store in the digital memory an identifier of a payment transaction for the subject's use of the physiologic monitor.

61. The method of claim 52, further comprising storing in the digital memory an encryption key to be used by the physiologic monitor to encrypt the digital physiologic data.

62. The method of claim 52, further comprising employing the initialization console to store a set of subject feedback data in the digital memory.

63. The method of claim 62, wherein the subject feedback data includes a voice message to be played back by the physiologic monitor.

64. The method of claim 63, wherein the voice message is individually customized according to an identity of the subject.

65. The method of claim 63, wherein the voice message comprises a reminder for the subject to perform an action.

66. The method of claim 63, wherein the voice message comprises a reminder for the subject to take a medication.

67. The method of claim 63, wherein the voice message comprises an alert indicating that a subject physiologic parameter value determined by the physiologic monitor meets a predetermined condition.

68. The method of claim 63, wherein the voice message comprises an alert indicating a fault condition for a sensor of the physiologic monitor.

69. The method of claim 63, wherein the voice message comprises an alert indicating a condition of the digital memory.

70. The method of claim 62, wherein the subject feedback data includes audio volume customization data for a physiologic monitor speaker.

71. The method of claim 70 wherein the audio volume customization data includes data setting a dependence of a volume of the physiologic monitor speaker on a current time.

72. The method of claim 70 wherein the audio volume customization data includes data setting a dependence of a volume of the physiologic monitor speaker on a current ambient light intensity measured by the physiologic monitor.

73. A physiologic monitor initialization console comprising:

a server authorization unit for connecting to an authorization server over a wide area network to verify that a subject's use of a wearable physiologic monitor is authorized; and

a physiologic monitor configuration unit connected to the server authorization unit, for performing a configuration of the physiologic monitor upon verifying that the subject's use of the wearable physiologic monitor is authorized, wherein the configuration defines a set of physiologic sensing operations to be performed by the physiologic monitor.

74. A physiologic monitoring method comprising:

receiving a payment from a payor for a subject-specific set of authorized monitoring uses of a wearable physiologic monitor;

activating the set of authorized monitoring uses of the physiologic monitor by programming a set of configuration data in a digital memory of the physiologic monitor;

employing the physiologic monitor including the digital memory to perform a set of physiologic measurements according to the configuration data on the subject while the subject wears the physiologic monitor; and

storing digital physiologic data generated by the physiologic measurements in the digital memory.

75. The method of claim 74, wherein the set of physiologic measurements include a set of electrocardiogram measurements.

76. The method of claim 74, wherein the set of physiologic measurements include a set of acceleration measurements.

77. The method of claim 74, wherein the set of physiologic measurements include a set of measurements selected from respiratory impedance measurements and fluid load impedance measurements.

78. The method of claim 74, wherein the set of authorized monitoring uses is a subset of a set of monitoring uses supported by the physiologic monitor.

79. The method of claim 74, wherein receiving the payment and activating the subset of authorized uses comprises connecting the physiologic monitor to an initialization console, employing the initialization console to perform the payment, and employing the initialization console to program the set of configuration data in the digital memory.

80. The method of claim 74, further comprising storing a subject identifier in the digital memory.

81. The method of claim 74, further comprising storing in the digital memory an identifier of a transaction of the payment.

82. The method of claim 74, further comprising storing in the digital memory an encryption key to be used by the physiologic monitor to encrypt the digital physiologic data.

83. A physiologic monitoring method comprising:

connecting a digital memory of a wearable physiologic monitor to an initialization console;

employing the initialization console to perform an activation and a configuration of the physiologic monitor, wherein the activation transitions the physiologic monitor from a un-initialized state to an initialized state, wherein the physiologic monitor in the un-initialized state is not user-operable to perform a set of physiologic measurements, wherein the physiologic monitor in the initialized state is user-operable to perform the set of physiologic measurements, and wherein the configuration defines a set of physiologic sensing operations to be performed by the physiologic monitor;

disconnecting the digital memory from the initialization console, and thereafter employing the physiologic monitor to record subject physiologic data and to store subject physiologic monitoring data in the digital memory; and

employing the initialization console to display and analyze the subject physiologic monitoring data.

* * * * *