US005774113A

United States Patent [19]

Barnes

[11] **Patent Number: 5,774,113**

[45] **Date of Patent: Jun. 30, 1998**

[54] **3-D MOUSE ON A PEDESTAL**

[75] Inventor: **James Barnes**, Campbell, Calif.

[73] Assignee: **Logitech, Inc.**, Fremont, Calif.

[21] Appl. No.: **400,625**

[22] Filed: **Mar. 6, 1995**

Related U.S. Application Data

[63] Continuation of Ser. No. 135,660, Oct. 12, 1993, abandoned, which is a continuation of Ser. No. 801,238, Dec. 3, 1991, abandoned.

[51] **Int. Cl.**[6] **G09G 5/00**

[52] **U.S. Cl.** **345/156**; 345/158

[58] **Field of Search** ..... 340/706, 709, 340/710; 273/148 B, 438, DIG. 28; 200/6 A, 6 R, 5 A; 345/156, 157, 158, 161, 163, 166, 167, 177

[56] **References Cited**

U.S. PATENT DOCUMENTS

3,643,148	2/1972	Brown et al.	340/706
4,148,014	4/1979	Burson	340/709
4,530,504	7/1985	Long, Jr.	273/148 B
4,538,476	9/1985	Luque	340/710
4,578,674	3/1986	Baker et al.	273/438
4,613,139	9/1986	Robinson, II	273/148 B
4,682,159	7/1987	Davison	340/709
4,698,626	10/1987	Sato et al.	340/706
4,896,003	1/1990	Hsieh	200/6 A
4,924,216	5/1990	Leung	340/709
4,988,981	1/1991	Zimmerman et al.	340/709

Primary Examiner—Chanh Nguyen
Attorney, Agent, or Firm—Townsend and Townsend and Crew LLP

[57] **ABSTRACT**

A pointer or mouse device which can provide an input for a viewpoint or cursor on a computer display without being physically moved across a surface or through space is disclosed. The pointer is mounted on a pedestal which is fixed. The pointer can rotate to change the direction in which it is pointing while on the pedestal. An extended movement button on the pointer provides a control signal to the computer to cause the viewpoint or cursor on the screen to move in the direction indicated by the direction the pointer is pointed at that time. Thus, the viewpoint or cursor can be moved without physically moving the pointer device. Instead, the pointer is simply rotated to the direction desired for movement and the extended movement button is pressed. A continue button may also be included to cause the viewpoint or cursor to continue rotating in the same way as when the button was pushed, without the user having to continue turning the pointer.

21 Claims, 7 Drawing Sheets

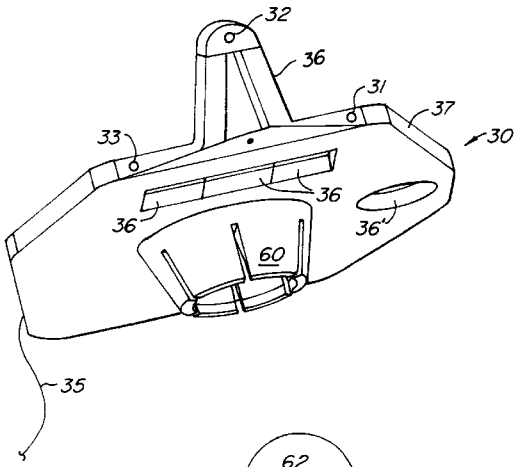

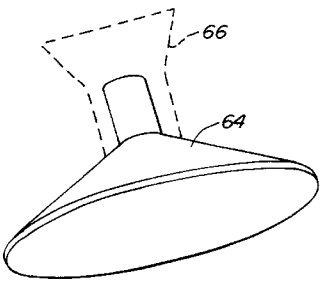

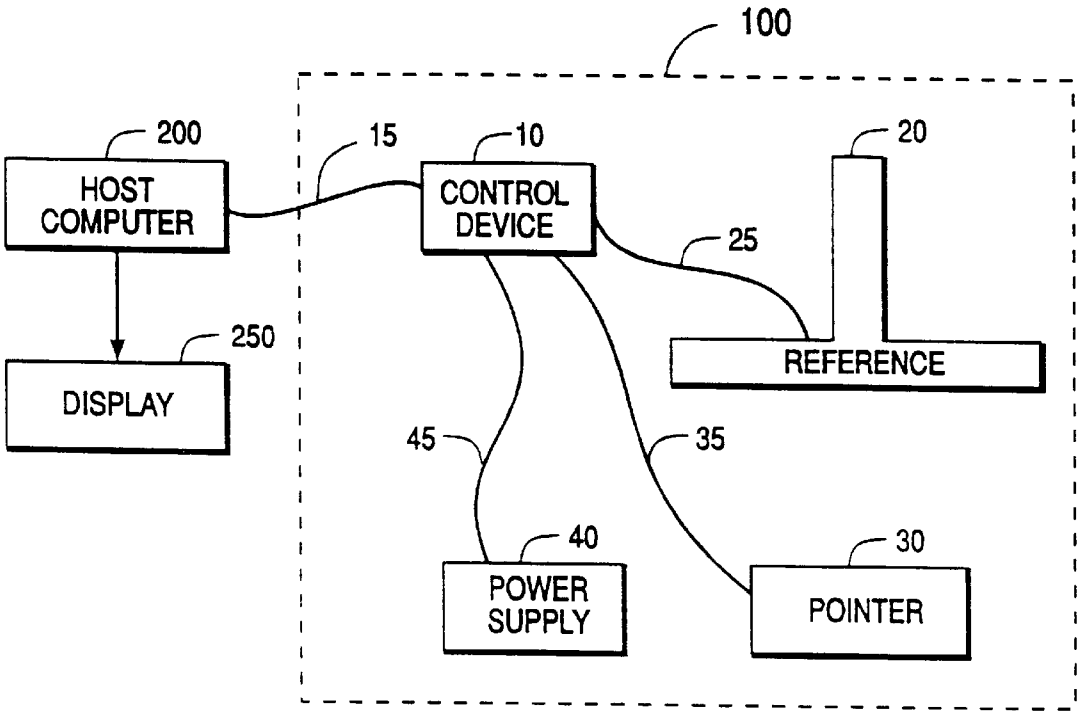
100
200
HOST COMPUTER
15
10
CONTROL DEVICE
20
25
REFERENCE
250
DISPLAY
45
35
40
POWER SUPPLY
30
POINTER

FIG. 1A

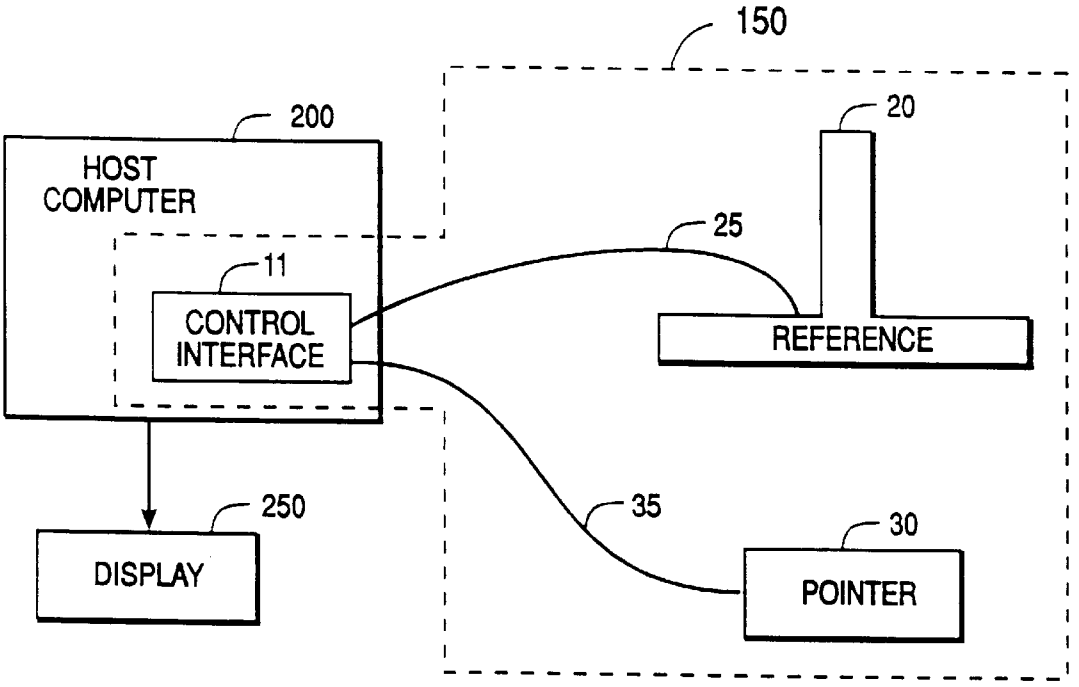
150
200
HOST COMPUTER
11
CONTROL INTERFACE
20
25
REFERENCE
250
DISPLAY
35
30
POINTER

FIG. 1B

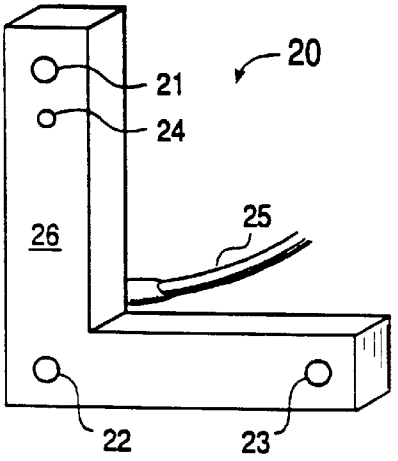

FIG. 2A

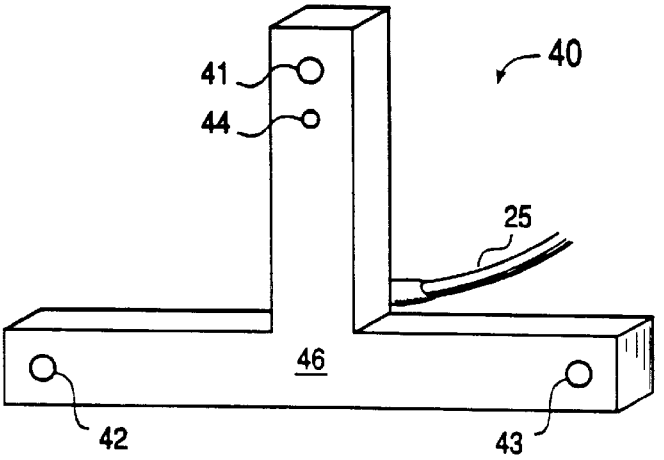

20

FIG. 2B

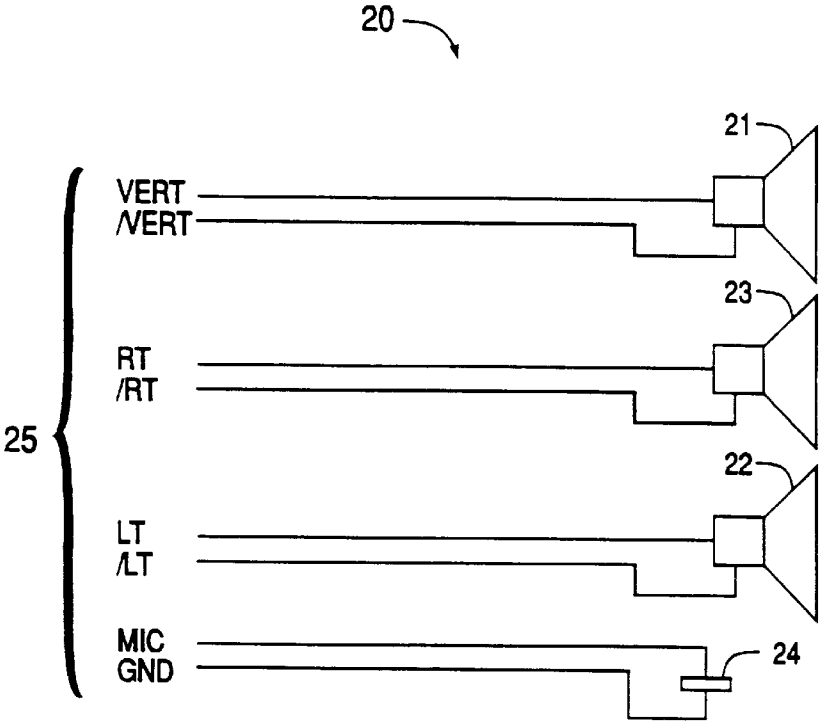

FIG. 2C

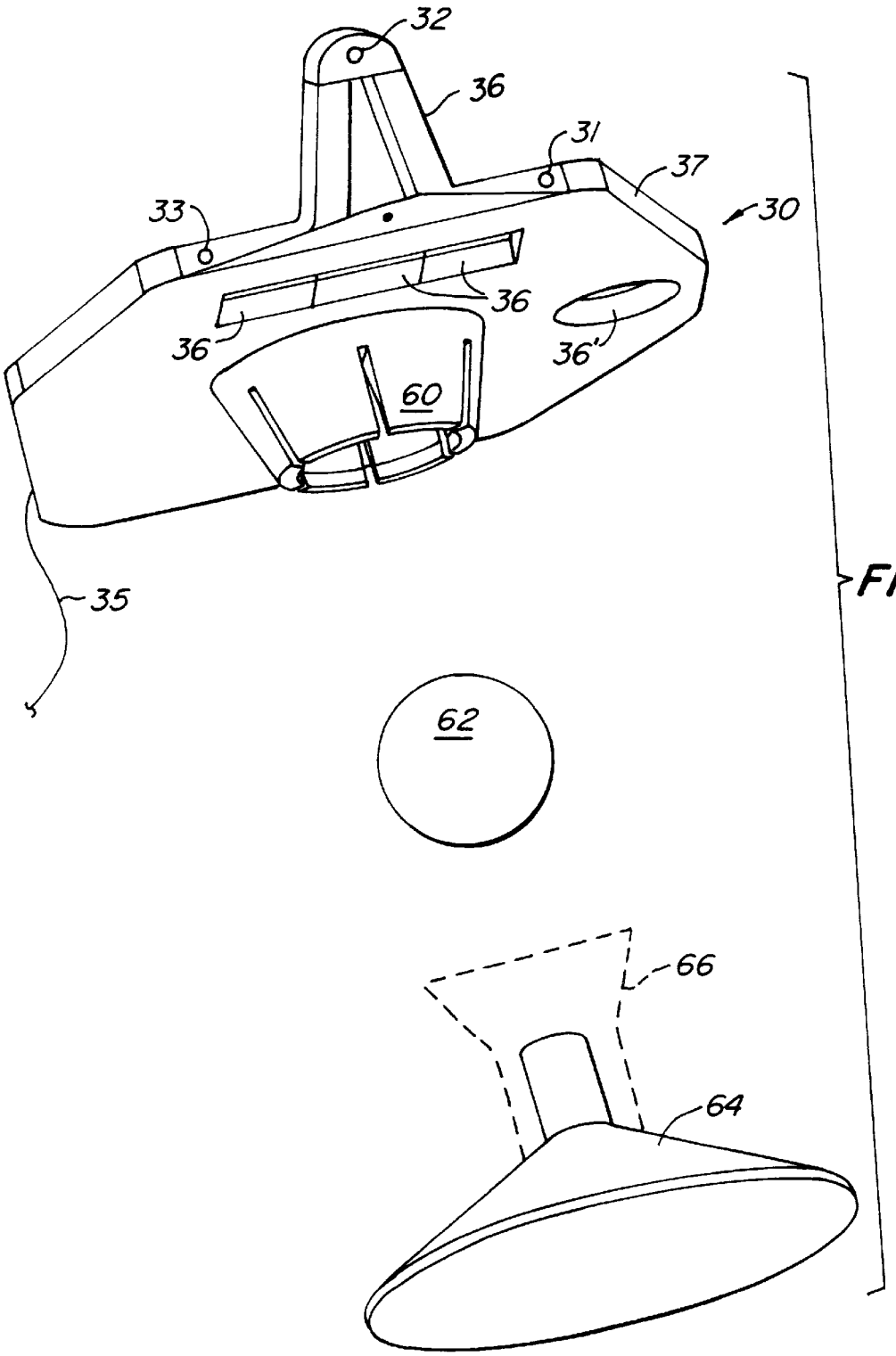

FIG. 3A.

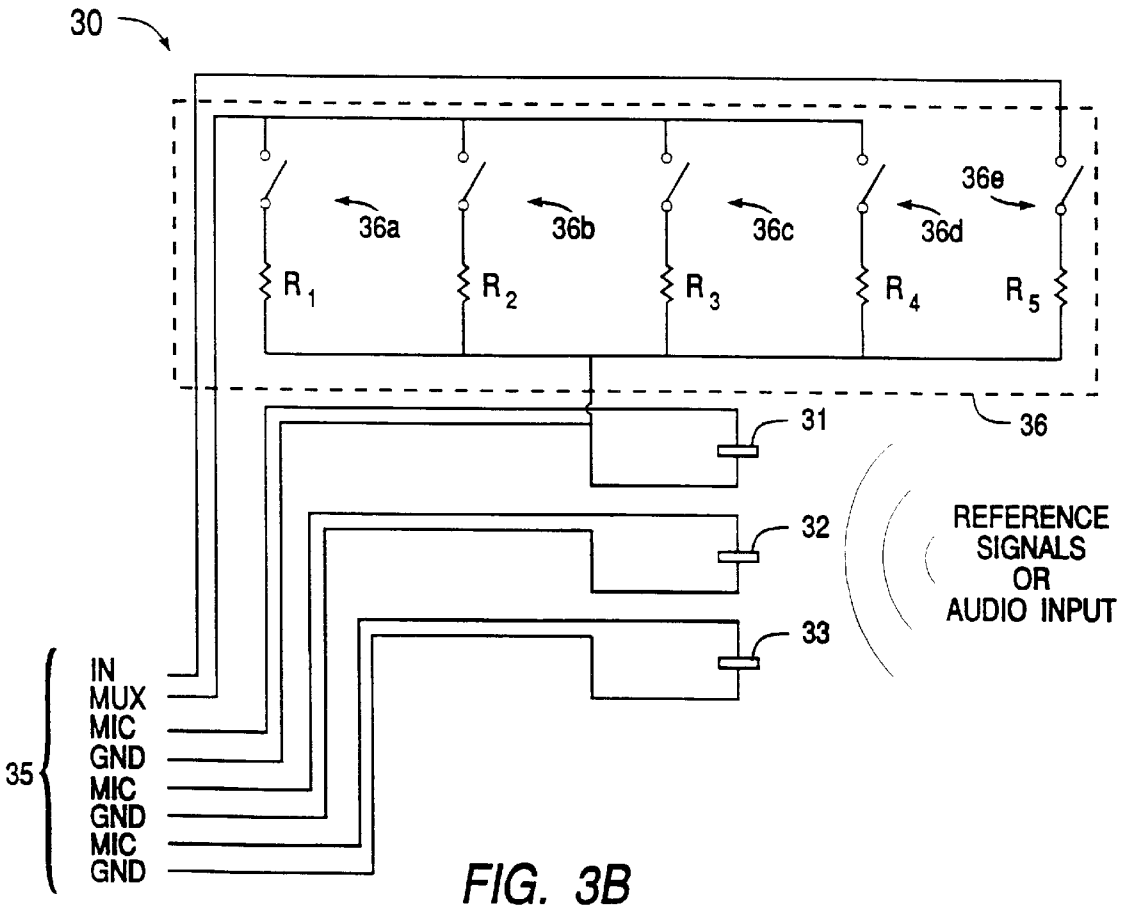
30
36a
36b
36c
36d
36e
R1
R2
R3
R4
R5
36
31
32
33
REFERENCE SIGNALS OR AUDIO INPUT
35
IN
MUX
MIC
GND
MIC
GND
MIC
GND

FIG. 3B

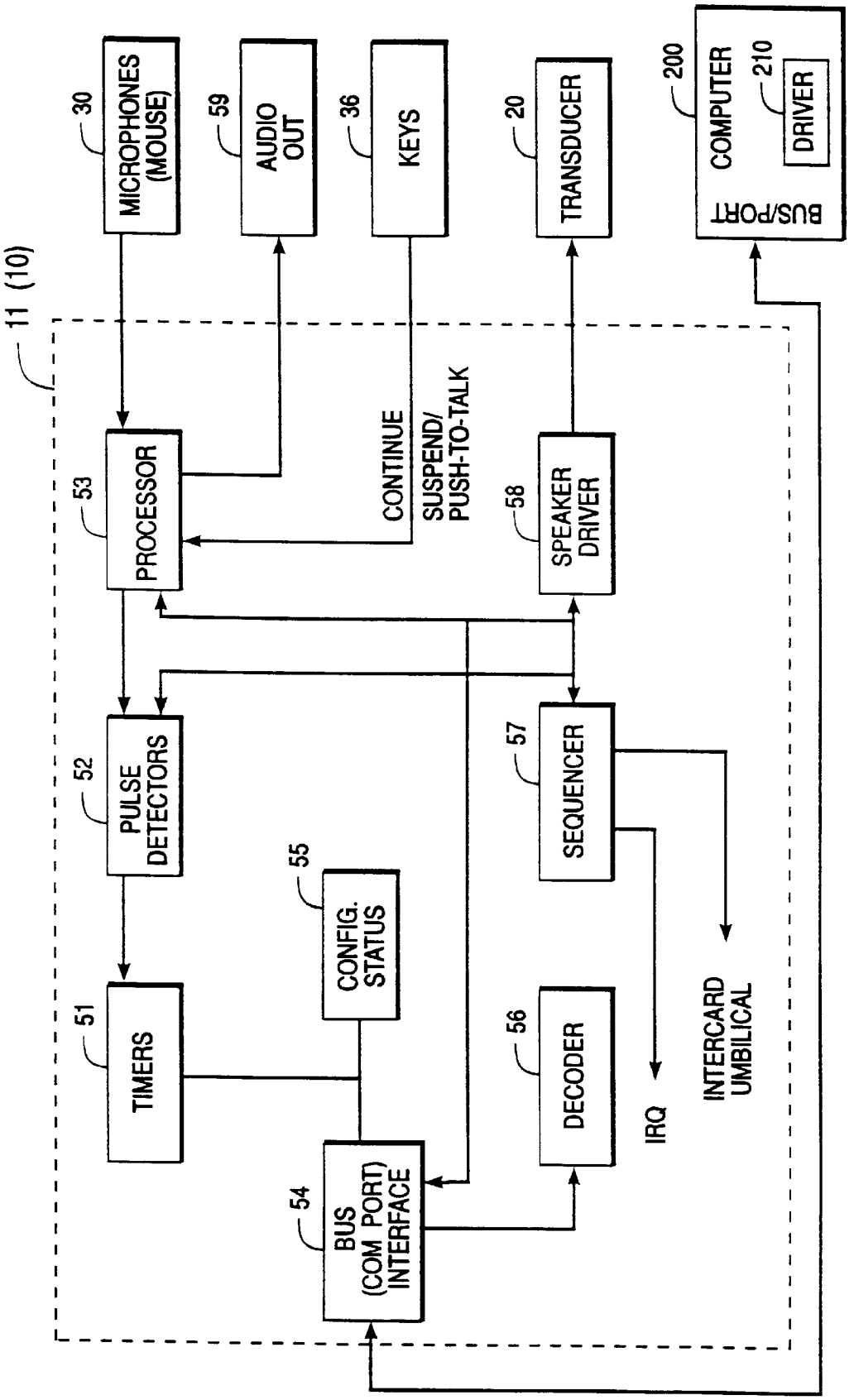
11 (10)
30
MICROPHONES (MOUSE)
59
AUDIO OUT
36
KEYS
20
TRANSDUCER
200
COMPUTER
210
DRIVER
BUS/PORT
53
PROCESSOR
CONTINUE
SUSPEND/ PUSH-TO-TALK
58
SPEAKER DRIVER
52
PULSE DETECTORS
57
SEQUENCER
55
CONFIG. STATUS
51
TIMERS
56
DECODER
IRQ
INTERCARD UMBILICAL
54
BUS (COM PORT) INTERFACE

FIG. 4

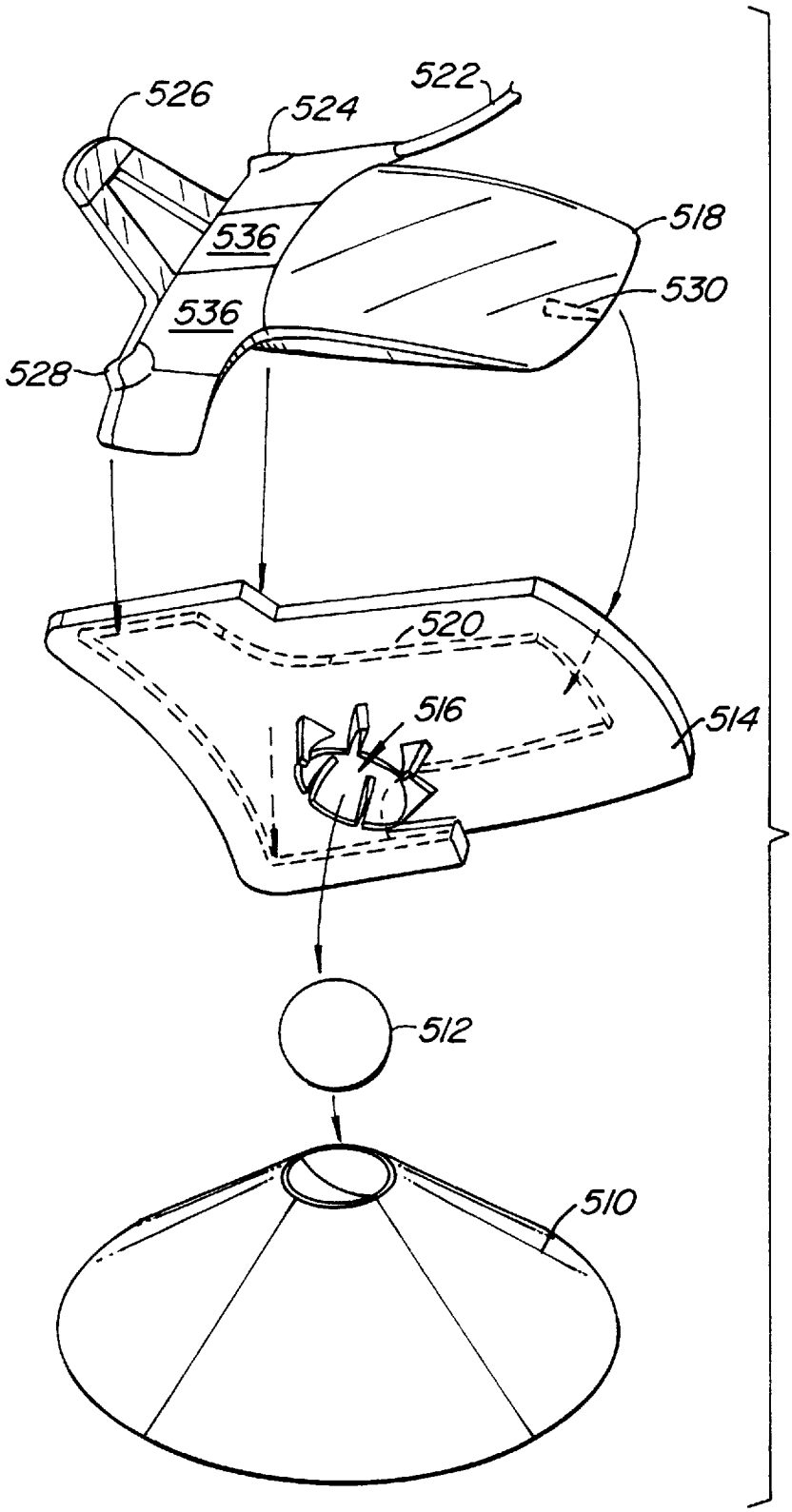

FIG. 5.

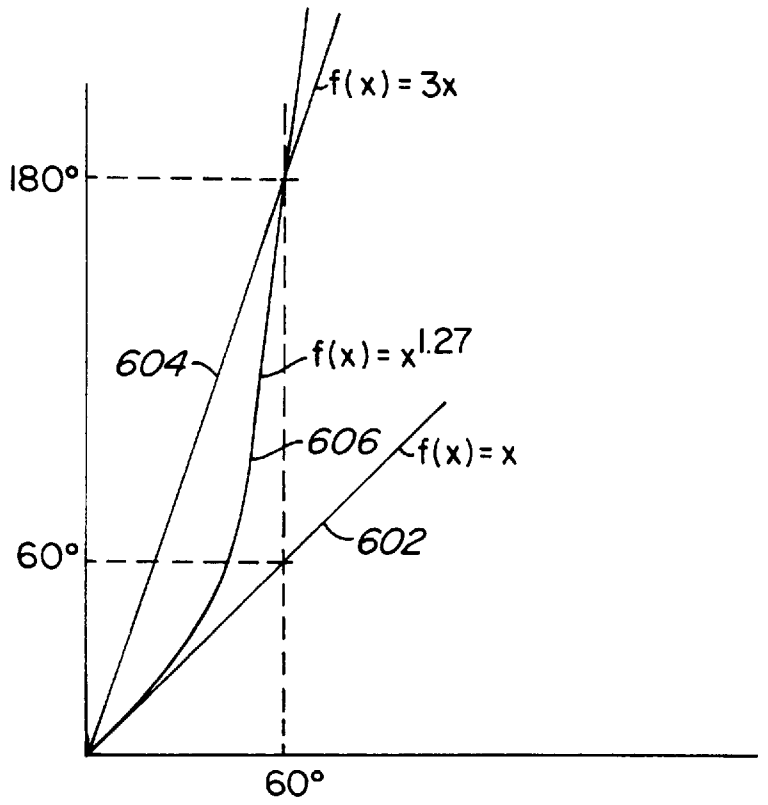

FIG. 6.

3-D MOUSE ON A PEDESTAL

This is a continuation of application Ser. No. 08/135,660, filed Oct. 12, 1993, now abandoned which was a continuation of application Ser. No. 07/801,238, filed Dec. 3, 1991, now abandoned.

FIELD OF THE INVENTION

The invention relates generally to input systems for computers and, more particularly, a system for controlling a viewpoint or cursor on a video display of a computer.

BACKGROUND OF THE INVENTION

Users of a computer typically enter input using either a keyboard or a pointing device. The latter, which is of particular interest to the present invention, includes such well-known devices as mice, joy sticks, track balls, light pens, and the like.

The operation of "mice" is typical of pointing devices. Movement of a mouse, which is typically held in the user's hand, causes a position indicator (cursor) on a video display connected to the computer to move in relatively the same direction and magnitude. The mouse usually includes a pair of transducers which detect the movement of the mouse in two orthogonal directions; in turn, these motion signals are supplied to the computer. In addition, mice often include two or three keys which can be depressed for supplying additional signals to the computer, e.g., for selecting choices from a displayed menu.

There are two basic types of mice: mechanical and optical. Mechanical mice employ an inverted track ball or "rollerball" which is rolled across a desk or other planar surface by the user. Two rollers touching the ball record its movement along X and Y axes. As the rollers rotate, encoders make and break electrical contact and send corresponding electrical pulses that the computer can use to track movement. Alternatively, some mechanical mice forego the rollerball and instead employ two rollers which protrude from the bottom of the mouse to sense the X and Y directional movements directly. In either, case friction (mechanical) contact is made with a planar surface, with movement along that surface generating motion signals.

Optical mice, on the other hand, employ a special reflective mouse pad instead of a rolerball. An optical mouse has two LEDs that shine two light beams, one red and one infrared, onto the mouse pad. Reflected light beams re-enter the mouse through lenses which focuses the light onto photodetectors. As the mouse moves, the pad alternately absorbs and reflects light; blue lines on the pad absorb the red light while black lines absorb the infrared light. The photodetectors detect the "makes" and "breaks," which the mouse converts to signals for the computer.

An optomechanical mouse, a hybrid, employs both mechanical and optical means to detect movement. Like the mechanical mouse, the optomechanical mouse employs a rollerball. Instead of using electrical contacts, however, the optomechanical mouse uses two LED/photodetector pairs to detect movement along X and Y axes. As the roller rotates, the encoders alternately make and break light beams which shine between each LED/photodetector pair. Corresponding electric signals are sent to the computer to describe the motions of the mouse.

Regardless of the type, all of the foregoing mice generate motion signals by dragging a mouse device across a flat surface, such as a desk top. Commonly, a corresponding

display cursor moves across the video display. Typically, though, the cursor tracks the relative movement of the mouse, not its absolute or physical movement. To allow the user to move the cursor with some precision, the ratio of mouse movement to cursor movement (mouse "sensitivity") is usually much less than one. In other words, a large mouse movement is mapped as a small cursor movement on the screen. This allows better fine motor manipulation of the cursor on the screen.

Occasionally, however, the user will want to move the cursor across a large screen distance, for example, from one side of the display to another. This is accomplished by "stroking" the mouse: repeatedly dragging the mouse across the desk top in a stroking fashion. In between each stroke (i.e., during back stroke), the mouse is lifted off the desk so that mechanical or optical contact is lost. Since no motion signals are generated during the reverse or back stroke, the cumulative effect is movement of the cursor in the stroke direction only.

In addition to the basic mouse design, a variety of other computer input designs are known. U.S. Pat. No. 4,654,648, for example, describes a position control system having a wireless moveable "steering means" which emits acoustic signals, tracking means for receiving the acoustic signals and determining the position of the steering means by hyperbolic triangulation, and means for communicating the position of the steering means to a video display terminal. U.S. Pat. No. 4,578,674 describes a wireless cursor position device which operates by transmitting and receiving ultrasonic and infrared signals between the device and a control base. The control base includes an infrared emitter and at least two ultrasonic detectors; for three-dimensional (3-D) cursor control, additional ultrasonic detectors are required.

Cordless or wireless variants of input devices are known. U.S. Pat. No. 4,550,250, for example, describes a cordless input device which includes a pulse-driven light source whose duty cycle is controlled for conveying information. The detector has a housing with two spaced-apart optical slits for passing planes of infrared light onto concave light guides. The light guides, along with photoelectric sensors, produce positionally dependent, analog signals. The signals are processed by a microprocessor to determine the Cartesian coordinates of the device. U.S. Pat. No. 4,754,268 also describes a cordless input device. The cordless mouse indicates movement of the device on a planar surface by transmitting radio waves to a host computer.

The keys of mouse devices have also been refined. U.S. Pat. No. 4,994,795, for example, describes a mouse input device having a plurality of programmable keys, with one embodiment including forty keys. A program controls the input device so that key signals are given priority. In the event that both key and motion signals occur, the key signals are supplied to the computer. If no key signal occurs, however, then motion signals are converted into key signals and are supplied to the computer.

While the prior art includes input devices having a variety of configurations (e.g., mouse, stylus, track ball, and the like) and means for communicating movement to a computer (including both cord and cordless models), the prior art input devices are largely confined to conveying two-dimensional (2-D) movement, i.e., movement along a planar surface. Of those systems which suggest a three- dimensional input device, the information conveyed to a computer is limited to positional information, i.e., the location of the device within an X, Y, and Z coordinate system.

SUMMARY OF THE INVENTION

The present invention provides a pointer or mouse device which can provide an input for a viewpoint or a cursor on a

computer display without being physically moved across a surface or through space. The pointer is mounted on a pedestal which is fixed. The pointer can rotate to change the direction in which it is pointing while on the pedestal. An extended movement button on the pointer provides a control signal to the computer to cause the viewpoint or cursor on the screen to move in the direction indicated by the direction the pointer is pointed at that time. Thus, the viewpoint or cursor can be moved without physically moving the pointer device. Instead, the pointer is simply rotated to the direction desired for movement and the extended movement button is pressed. A continue button may also be included to cause the viewpoint or cursor to continue rotating in the same way as when the button was pushed, without the user having to continue turning the pointer. Additional buttons can be included to cause movement in the X Y and Z directions without the need to actually point the device.

In one embodiment, the pointer includes several microphones which receive ultrasonic signals from a stationary frame having ultrasonic transmitters. A control circuit measures the relative timing of when the signals are sent and received at the various transmitters and microphones to determine the attitude of the pointer, giving pitch, roll and yaw information. Alternately, the transmitters may be on the pointer and the receivers on the stationary frame.

In another embodiment, the pointer can be removed from the pedestal and used in a mode which not only produces pitch, roll and yaw, but also direction signals along the three axes. When the pointer is docked on the pedestal, it will activate a switch on the pointer putting it into the pedestal mode, in which only pitch, roll and yaw information is provided. Actually moving the pedestal around on the desk to move the pointer will not affect the screen display except to the extent that it alters the pitch, roll and yaw of the pointer.

In one embodiment, the pedestal has a wide base with a ball at its top. The pointer is mounted on the ball with a socket which attaches to the ball allowing movement of the pointer in any direction. The pointer may be connected to the computer control means by either a wire or through radio, infrared, ultrasonic, or other transmission methods. A resilient rubber housing is used to cause the pointer to return to its home position when released.

The mouse or pointer of the present invention preferably operates in three modes. In a first mode, the mouse is on a desk top and provides two-dimensional or X Y position information to the computer. The mouse enters this mode upon the computer control system detecting that the mouse is at table top level. Thus, no separate switch is needed to enter this mode. In a second mode, the mouse moves freely through the air and provides three-dimensional positional and movement information, along with three rotational movement signals. Finally, in a third mode, the mouse is docked on the pedestal, activating a switch to indicate docking. The combination of the activation of the switch and the determination that the mouse is not at desk top level tells the computer that the mouse is in the pedestal mode, not sitting on the desk top. In this mode, only rotational information and not X, Y, Z movement information is provided to the computer.

The present invention thus provides a single structure which is uniquely suited to various applications. The existing software applications which require a two-dimensional mouse can be served, as well as applications which are best suited for movement through the air, such as the movement of a cursor on a screen. Finally, applications such as a viewpoint to give a sensation of flying on the screen may be best suited to pedestal operation.

For a fuller understanding of the nature and advantages of the invention, reference should be made to the ensuing detailed description taken in conjunction with the accompanying drawings.

BRIEF DESCRIPTION OF THE DRAWINGS

FIG. **1**A is a block diagram of an input system constructed in accordance with the principles of the present invention.

FIG. **1**B is a block diagram of a second alternative embodiment of the present invention.

FIGS. **2**A–B are perspective views of reference apparatus of the present invention.

FIG. **2**C is a schematic diagram of the electronics of the reference apparatus of FIGS. **2**A–B.

FIG. **3**A is a perspective, exploded view of one embodiment of the pointer on a pedestal according to the present invention.

FIG. **3**B is a schematic diagram of the electronics of the pointer of FIG. **3**A.

FIG. **4** is a block diagram of a control circuitry of the present invention.

FIG. **5** is a perspective, exploded view of a pointer which is docked on a pedestal.

FIG. **6** is a diagram of different transfer functions for a mouse input.

DESCRIPTION OF A PREFERRED EMBODIMENT

Referring now to FIG. **1**A, an input system **100** of the present invention comprises a control device **10**, a stationary or reference frame **20**, a pointer or mouse device **30**, and a power supply **40**. The control device **10** provides an interface between both stationary frame **20** and pointer or mouse **30** and a host computer **200**. In particular, stationary frame **20** is connected to control device **10** via line **25**, pointer **30** is connected to control device **10** via line **35**, and control device **10**, in turn, is coupled to the host computer **200** via line **15**. Computer **200** provides information, such as a cursor or viewpoint position, to a user through display **250**, which may be a CRT display or other output device. In a preferred embodiment, computer **200** is an IBM or IBM-compatible personal computer (available from International Business Machines, Armonk, N.Y.).

In FIG. **1**B, a first alternative embodiment of the present invention is shown. In system **150**, the control device **10** of system **100** has been replaced with a control interface **11**. Specifically, control interface **11**, which may be in the form of a bus card, connects reference member **20** and pointer **30** to the host computer **200** via line **25** and line **35**, respectively. Control interface **11** is directly connectable to host computer **200** by a system bus (e.g., micro-channel, industry standard architecture (ISA), or extended industry standard architecture (EISA) or similar architecture).

Referring now to FIGS. **2**A–B, the stationary or reference frame **20** comprises a frame **26** having a plurality of spaced-apart transmitter sources **21**, **22**, **23** for generating signals which may be detected. In a preferred embodiment, the reference **20** is a transmitting device which includes three ultrasonic transducers (or piezo-electric speakers) capable of producing a short burst of acoustic cycles (e.g., 22.5 kilohertz) when activated.

Those skilled in the art will also appreciate that other sources, e.g., magnetic, electromagnetic, infrared, sonic,

infrasonic, and the like, may be detected in accordance with the present invention. The use of ultrasonic transducers is particularly desirable, however, due to their low cost and widespread availability. Furthermore, ultrasonic transmissions are immune to radio frequency (RF) and other electromagnetic interferences which are common in a workplace setting.

As shown in the embodiment of FIG. 2A, reference **20** includes an "L"-shape frame **26** housing the three transducers **21**, **22**, **23** in a right-triangle configuration. Right transducer **23** and vertex transducer **22** are preferably mounted close to the work surface (i.e., table top) and tilted upward from about 20° to 40°, preferably about 25°; top transducer **21** is located directly over vertex transducer **22** and tilted upward at angle of 20° or less. When so configured, the system receives minimum sound reflections (and hence noise) from the work surface.

As shown, reference frame **20** also includes a calibration microphone **24** located a known distance from one of the speakers for calibrating the speed of sound in air in the user's environment (as described hereinbelow). To simplify the determination, microphone **24** is mounted at a known relative location for calibration with one of the speakers. As shown in the embodiment of FIG. 2A, microphone **24** is mounted near the top speaker **21** for calibration with the right speaker **23**.

Alternate configurations exist for the reference member. As shown in FIG. 2B, for example, apparatus **40** includes a "T"-shaped frame having three spaced-apart transducers **41**, **42**, **43** arranged in an equilateral-triangular fashion (i.e., with each transducer at a vertex). Those skilled in the art will appreciate other configurations for the transmitter. For example, each of the transducer elements may be housed within its own independent structure such as that taught by U.S. Pat. No. 4,988,981 (applied to a plurality of receivers). Typically, the transmitter or reference apparatus will be fashioned in a configuration which is suitable for stationary use in the user's work area, e.g., a desk top.

Referring now to FIG. 2C, a schematic of the transmitting reference **20** is shown. Each of the elements **21**, **22**, **23** comprises a piezo-electric transducer or speaker having separate input/output lines. Calibration microphone **24** is also provided with separate input/out lines. All lines are combined into the single line **25** which is connected to the control interface **10** (or **11**).

FIG. 3A shows a pointer or mouse **30** according to one embodiment of the present invention. Pointer **30** has a socket **60** which engages with a ball **62** mounted on a pedestal **64**. The pointer, ball and pedestal are shown in exploded view in FIG. 3A. When mounted, socket **60** allows mouse **30** to rotate around ball **62** to assume different attitudes.

Pointer **30** includes three microphones, **31**, **32** and **33** for detecting ultrasonic signals. One microphone, microphone **32**, is mounted on a triangular-shaped frame **36** so that the three microphones form a triangle to provide an optimum configuration for determining the attitude from the ultrasonic signals.

A rubber housing **66**, shown in phantom, is preferably attached to pedestal **64** on one end and attached to mouse platform **37** on the other. This rubber housing will bend as the mouse **30** is tilted and turned, but will cause the mouse to spring back to its horizontal position when released, thus providing a return-to-home function.

As shown, mouse **30** includes user-activated switches or keys **36** disposed along the top or dorsal surface of housing **37**, thus placing the keys at or near where a user's fingertips will lie. A switch **36** is placed where a user's thumb can activate it. Keys **36** operate as switches or buttons which allow the user to communicate with the computer **200**. Specifically, when activated by the user (e.g., by depressing with a finger), each key **36** transmits a signal to the host computer **200**, which may then be acted upon by application and/or system software. Each signal may be predefined or user defined to emulate user functions or key strokes. Each key or pointer button can be actuated independently or in any combination with other key(s). Additional signals may be generated by the keys **36** using "double clicking" and "dragging" (click and holding) techniques, which are known in the art.

In a preferred embodiment, keys **36** include at least four mouse buttons, with three buttons emulating a Logitech three-button mouse and one supporting additional input (e.g., "continue" described hereinbelow). Alternatively (in the same or an alternate embodiment), two of the keys **36** provide Microsoft mouse emulation. Signals generated by the key(s) are communicated to control device **10** (or control interface **11**) via line **35**. Techniques for transmitting and receiving signals from mouse buttons, such as the keys **36**, are known in the art; see, e.g., *Microsoft Mouse Programmer's Reference*, Microsoft Press, 1989.

Microphones **31**, **32**, **33** can be used for receiving speech, voice commands, and/or other sound input from the user. In a preferred embodiment, mouse microphones **31**, **32**, **33** are three omni-directional microphones which are disposed on the housing **37** in an equilateral-triangular fashion (i.e., so that no one angle exceeds 90°). While omni-directional, each microphone should have an unobstructed "line of sight" or view of the reference **20** when the pointer **30** when held in the user's hand. When used for audio input (e.g., for push-to-talk operation, described hereinbelow), one or more microphones will be aimed in the general direction of the audio source, such as the user's mouth.

As shown in the embodiment of FIG. 3A, microphones **31**, **32**, **33** may be disposed substantially along one face, e.g., a forward or anterior face, of the mouse **30**. To improve detection of the transducer sources, however, the three microphones are not arranged co-linear in a preferred embodiment. As illustrated, microphone **32** is offset from the other two microphones, which lie substantially co-planar with the top of the housing **37**, so that an equilateral triangle lying in a vertical plane is defined by the three microphone elements **31**, **32**, **33**. In a preferred embodiment, the three microphones **31**, **32**, **33** will lie in a vertical plane when the mouse **30** is at rest (e.g., on a desk top), thus simplifying the calculation of mouse information (described in further detail hereinbelow).

Referring to FIG. 3B, a schematic diagram of the mouse **30** is shown. Keys **36** comprise a plurality of switches, such as switches **36***a–e*. By providing each switch with a resistor (e.g., R_{1-5}) which has a unique resistance and which provides a unique sum resistance when added to others resistors, various combinations of keys or switches **36** may be determined. As shown, one switch (e.g., switch **36***e*) may serve as a master switch. Also shown in FIG. 3B, are the microphones **31**, **32**, **33**, each having separate input and output lines. One of the microphone elements (or more), such as microphone **31**, may also be coupled to the switches (e.g., by a ground line) for switch-activation of that element. All input/output lines of the keys **36** and microphone elements **31**, **32**, **33** are combined into the single line **35**, which may be connected to the interface **10** (or **11**).

While the foregoing discussion of the reference and pointing components of the present invention presents a

stationary transmitting reference and a rotatable receiving pointer, those skilled in the art will readily appreciate that the stationary reference may instead include detectors or receivers (e.g., microphone disposed on a stationary desktop frame) while the pointer is a transmitter device (e.g., a pointing device having transducers). In this alternate configuration, elements **31**, **32**, **33** of pointer **30** are instead three spaced-apart transmitters, such as ultrasonic transducers. In this case, elements **21**, **22**, **23** of frame **20** (or elements **41**, **42**, **43** of frame **40**) are three spaced-apart detectors, such as omni-directional microphones. With either configuration, the system **100** can accurately determine the position and attitude of pointer **30** relative to stationary reference **20**.

The operation of system **100** will now be described. In the following discussion, stationary device **20** will serve as the transmitting member, and the pointing device or mouse **30** will function as the receiving member. Those skilled in the art will appreciate the operation of the complimentary configuration, i.e., system **100** with stationary device **20** serving as the receiving member and the pointer **30** as the transmitting member. Furthermore, the discussion of operation of system **100** is also applicable to system **150** and **150'**.

In operation, system **100** uses the propagation delay of sound to perform position determinations. In particular, the system **100** measures the time of delay for sound to travel from each of the three speakers **21**, **22**, **23** to the three microphone elements **31**, **32**, **33** positioned on mouse **30**. From this delay information and the speed of sound in air (calibrated for that time and location), input system **100** (or **150**) determines the position and attitude of the mouse **30** with respect to the transmitter apparatus **20**.

Referring now to FIG. **4**, the function and construction of control interface **11** will be described. (Interface **10** operates in a like manner but communicates with computer **200** through a communication port, e.g., a RS-232 or SCSI, instead.) Control interface **11** provides apparatus and method for accurately measuring the distance from a speaker (e.g., speakers **21**, **22**, **23**) to a microphone (e.g., mouse microphones **31**, **32**, **33** or transducer microphone **24**).

As shown, control interface **11** interacts with reference **20**, pointer **30**, and a device driver **210** stored in host computer **200**. During power on, interface **11** or **10**, under control of driver **210**, initializes and enables mouse **30**, transducer **20**, and control interface **11**. Next, the first of three speakers (e.g., transducers **21**, **22**, **23**) is selected. Control interface **11** measures the time required for sound to propagate to each of the three microphones (e.g., microphones **31**, **32**, **33**). When sound is detected, a software interrupt is generated by apparatus **11** which may be read by the driver **210**. Driver **210**, which may be a software device driver or firmware (e.g., ROM, EPROM, or the like), reads the generated interrupt and the timer values for each of the four microphone elements (e.g., calibration microphone and three mouse microphones). The process is then repeated for each of the remaining speakers, with the driver **210** computing the current speed of sound and the position and attitude of the pointer or mouse. This information, in turn, is provided to computer **200** for use by application and/or operating system programs.

Control interface **11** comprises timers **51**, pulse detectors **52**, processor **53**, bus interface **54**, configuration status registers **55**, decoder **56**, sequencer **57**, and speaker driver **58** and audio output **59**. Connection to computer **200** is through bus interface **54**, which includes a 8/16-bit bus adapter as is known in the art. Interface **54** may occupy one of the selectable device locations (e.g., serial ports COM**1**–COM**4**, or parallel ports LPT**1**–LPT**2**), with the associated device interrupt request (IRQ) provided by sequencer **57** (e.g., by user-selectable jumper). For a general discussion of device locations, device drivers, and software/hardware interrupts in an IBM Personal Computer, see IBM *Technical Reference* (International Business Machines, Armonk, N.Y.), or Programmer's Guide to the IBM PC, Microsoft Press, 1985.

In operation, control interface **11** stimulates each speaker element and starts a counter for each of the microphones. Particularly, driver **58** under control of the speaker driver **58** stimulates transducers **20**. Processor **53** "listens" for the sound from the speaker to arrive at each microphone **30**; each counter or timer **51** is stopped when a particular sound is detected at its corresponding microphone. Since the speed of sound in air varies with environment (according to ambient temperature and barometer pressure), the control interface **11** measures the current speed of sound each time the position of the pointer or mouse **30** is calculated. By measuring the amount of time required for sound to travel a known fixed distance (e.g., between speaker **23** and microphone **24**), the speed of sound may be determined.

Bus interface **54** is connected to the configuration/status registers **55** and to two timer chips **51**, each of which contains three sixteen-bit timers. At any one time, only one of the two timers is selected as active (by setting a corresponding bit in the configuration register **55**). Bus interface **54** also includes an eight-bit data bus buffer and a sixteen-bit address decoder. An equality comparator is provided to detect the address bits which do not change based upon jumper selection. A GAL chip is used to decode the remaining address bits based upon jumper selection.

Timers **51** includes a pair of 82C54 timer chips (available from Intel Corporation of Santa Clara, Calif.) which provide timers for the four microphones and clocking for the speaker drivers; timing sequence is provided by sequencer **57**. In a preferred embodiment, the timers **51** include clock rates up to 10 megahertz.

Control sequencer **57** is provided by a GAL Chip (such as a GAL 16V8A chip available from Lattice Semiconductor Corporation of Hillsboro, Oreg.) which is responsible for providing timing sequence. The GAL can track many pointer devices in front of one transducer frame. The GAL also provides the "sample" and "dump" signals used by analog processing **52**.

Control **10** and **11** also receives and processes the signals from keys **36**. In turn, the signals are provided to computer **200** through interface **54**. In addition, processor supplies audio information (from the mouse **30**) to audio out **59**, which may be in the form of a standard DIN jack. Alternatively, audio may be supplied to the computer **200** through interface **54**.

A method for determining position and attitudinal information from a pointing device in 3-D space is disclosed in co-pending application Ser. No. 07/601,942, now assigned to the assignee of the present case, the disclosure of which is hereby incorporated by reference.

User operation of system **100** will now be described. System **100** provides two-dimensional and both stationary and moving three-dimensional operating modes. In the two-dimensional or "2D" operating mode, the mouse **30** operates as a conventional mouse, reporting two-dimensional positions on a desk top plane; in this mode, the mouse **30** is compatible with Logitech (Fremont, Calif.) and Microsoft (Redmond, Wash.) pointing devices. The 2D mode is entered when the computer determines from the height information that the mouse is resting on the desk top.

The "6D" mode, or moving 3D mode, permits six degrees of freedom (i.e., reporting three-dimensional positions with three rotational orientations within a three-dimensional space).

1) Pitch is rotation about the X axis.
2) Yaw is rotation about the Y aids.
3) Roll is rotation about the Z axis.

In the stationary 3D mode, the mouse is docked on a pedestal, and only reports the rotational orientations. Preferably, the computer learns the mouse has docked by the activating of a switch on the bottom of the mouse, coupled with a determination that the mouse is above the desk top to distinguish activation of the switch on the desk top in 2D mode.

The orientation for rotation may be relative to the pointer or to the reference frame; alternatively, the orientation may be global. When relative to the mouse (i.e., Local Euler mode), rotations are determined from the mouse's viewpoint. If the user points the mouse directly at the transducer and rocks one of its ends up and down (i.e., changes the mouse's angular relation to its X axis), the user is affecting the pitch angle. If the user then rotates the mouse 90 degrees to the right and then rocks it up and down, the user is affecting the yaw angle (not the pitch angle). In this mode, the orientation of the mouse **30** duplicates that of a pilot in an aircraft. When a pilot is flying a plane upside down and pushes the control stick forward, for example, the pilot wishes to go "down" from his or her perspective (which is actually "up" relative to the horizon).

Besides receiving positional (and in the case of 6D mode, attitude information), system **100** also receives user input from keys **36**. In a preferred embodiment, at least one signal of the keys **36** will cause continuation of the current mouse rotation. If the user is rotating the mouse **30** in a roll, for example, the user may activate a key for continuing this roll movement regardless of how the mouse itself now moves. The continuing function may be combined with a key indicating movement forward in the direction the mouse is pointing. The direction to continue may be determined to be the same direction as the mouse is facing (i.e., the mouse's viewpoint). Alternatively, the direction may be determined from a vector constructed from the last two mouse samples, or constructed from an average of a selected number of mouse samples. The "continue" function operates in either 2D or 6D mode.

Complementing the "continue" key, in a preferred embodiment, at least one signal of the keys **36** will cause reversal of the current mouse movement. If the user is moving the cursor forward, for example, the user may activate a "backward" key for continuing the movement in a reverse direction, regardless of how the mouse itself now moves.

According to the present invention, at least one of the signals of keys **36** includes a "suspend" apparatus for ignoring rotations. Thus, mouse **30** may be repeatedly "stroked", with the suspend apparatus invoked during the back stroke phase. The "suspend" function operates in any of the 2D and 3D modes. This also allows release of the mouse to its original upright position without moving the viewpoint or cursor.

In one embodiment, keys **36** activate a "push-to-talk" feature. In particular, at least one signal of the keys **36** will activate a mouse microphone (e.g., microphone **31**, microphone **32**, and/or microphone **33**) to receive audio input from the user. The operation of the key may resemble that of a dictation machine, with audio received in response to one signal and halted in response to another signal; alternatively, one signal may serve as a toggle.

The push-to-talk feature is particularly advantageous when used with voice recognition and multimedia applications. If more than one mouse microphone is activated, stereo audio input may be received by the mouse **30**. Audio input received by the mouse is supplied to the control interface **11**, and in turn supplied to the computer **200** and/or the audio out **59** (of FIG. **4**).

In a preferred embodiment, the "push-to-talk" feature is operably coupled to the "suspend" feature as follows. Activating the push-to-talk signal or mode also invokes the suspend mode. In operation, as the computer **200** is executing an application, such as a multimedia application, the user may invoke press-to-talk for entering audio input, while at the same time suspending or freezing other input (e.g., graphic input).

The continuing, suspend, and push-to-talk functions may be controlled by the device driver **210**. In response to a continue signal from keys **36**, for example, driver **210** continues to supply current mouse information to computer **200**. In response to a suspend signal from keys **36**, on the other hand, driver **210** temporarily suppresses the transmittal of mouse information to computer **200**. Similarly, driver **210** provides audio input depending on the status of the push-to-talk button.

FIG. **5** is an exploded, perspective view of an alternate embodiment of a pedestal which allows a mouse to be docked and removed. The pedestal has a base **510** on which is mounted a ball **512**. A platform **514**, shown tilted so that its bottom can be seen, connects onto the top of ball **512** with a socket **516**. A mouse **518**, shown tilted so that its top can be seen, is designed to be docked on platform **514**. Lines **520**, shown in phantom on platform **514**, indicate a recessed area on the top of the platform designed to mate with the bottom of mouse **518**.

Mouse **518** includes a cord **522** which sends signals from microphones **524**, **526** and **528** to a computer. A switch **530** on the bottom of mouse **518**, shown in phantom, is activated when the mouse is docked onto platform **514**. This switch will cause the mouse to move from the 3D moving, or 6D, mode to the 3D stationary mode in which only rotational signals are provided. Mouse **518** also includes control buttons **536**.

In the moving or flying 3D mode, the mouse is best suited for moving a cursor around the three dimensions on the screen. When the screen is used as a viewpoint, such as to give a sensation of flying, the docked, pedestal operation seems best suited. However, either operation can be conducted in either mode.

As will be appreciated, the pedestal structure of FIG. **5** is well adapted for small turning angles, but large angles, such an 180°, would be difficult. One method is to use the suspend or continue functions discussed earlier. Another method would be to vary the transfer function of the signals received from the mouse.

FIG. **6** shows an example of 3 different transfer functions. The standard transfer function, shown as line **602**, produces an output signal exactly proportional to the movement of the mouse. Thus, for instance, for a 60° turn of the mouse, a 60° turn of the cursor or viewpoint on the screen will be produced. This could be modified by using the transfer function **604** in which the function is $f(x)=3x$. Here, a 60°, turn of the mouse will produce a 180° turn on the screen. A third transfer function in the middle is an exponential function **606**. The particular exponential function shown is $f(x)=x^{1.27}$. This function gives a value equal to the $f(x)=3x$ curve at the 60°, point.

As can be seen, the exponential curve gives an approximation of the $f(x)=x$ curve **602** at low amplitudes, thus

giving the user exact correspondence to mouse movements for small movements. For larger movements, the exponential function kicks in, giving a much greater movement on the screen in response to larger movements of the pointer. This gives a combination of fine control for small movements along with the capability to make larger movements without using the suspend or continue button or completely turning the mouse over. These functions are implemented by a simple conversion process in the receiving portion of the computer in a manner well known to anyone with skill in the art.

While the invention is described in some detail with specific reference to a preferred embodiment and certain alternatives, there is no intent to limit the invention to that particular embodiment or those specific alternatives. Those skilled in the art, for example, will appreciate that other transmitted signals, such as infrared, radio waves, and the like, may be employed for detection. In addition, other mounting structures than a pedestal could be used, such as a horizontal arm extending from a computer or a suspension system. In an alternate embodiment, no transmitters or receivers are used, but instead transducers on the pedestal indicate the attitude of the pointer on the pedestal. Multiple types of transducers can be used to accomplish this, such as a gyroscope, accelerometers, or potentiometers for the different directions. The true scope of the invention is defined not by the foregoing description but by the following claims.

What is claimed:

1. An input device for a computer comprising:

a first, stationary transducer;

a base for supporting said input device on a flat surface;

a platform for supporting a pointing device;

a coupling mechanism coupling said platform to said base to allow rotation of said platform about said base;

a rigid pointer, mounted on said platform to be rotatable in multiple directions relative to said base, said pointer including a plurality of second transducers, each one of said plurality of second transducers being fixed relative to said pointer and to said plurality of second transducers, such that said pointer, platform and plurality of second transducers are a single, rigid unit which rotates about said base;

means for transmitting signals between said first transducer and said plurality of second transducers; and

control means, coupled to said first and said one of said plurality of second transducers, for providing the computer an attitude of said pointer.

2. The device of claim **1** wherein said pointer includes at least one key for generating a user input signal, said control means being responsive to said user input signal to generate a signal indicating movement on a display coupled to said computer in a direction corresponding to said attitude of said pointer.

3. The device of claim **1** wherein said support structure comprises a pedestal with a base having a ball fixedly mounted on top, and said pointer has a socket extending from its bottom for engaging said ball such that said pointer can rotate around said ball.

4. The device of claim **1** further comprising means for returning said pointer to a home position on said support structure.

5. The device of claim **1**, wherein said first stationary transducer includes a plurality of ultrasonic transmitters.

6. The device of claim **5**, wherein said ultrasonic transducers are mounted on a frame, and further comprising a calibration microphone mounted on said frame.

7. The device of claim **5**, wherein said plurality of ultrasonic transmitters is three spaced-apart ultrasonic transmitters arranged on a frame at known locations relative to one another.

8. The device of claim **1**, wherein said pointer includes a plurality of microphone elements.

9. The device of claim **8**, wherein said plurality of microphone elements is three spaced-apart microphones disposed along one face of the pointer.

10. The device of claim **1**, wherein said pointer includes a plurality of keys for generating user input signals.

11. The device of claim **10**, further comprising means for ignoring position and attitude information in response to one of the user input signals while maintaining one of a cursor and a viewpoint on a display corresponding to an attitude of said pointer prior to activation of said means for ignoring.

12. The device of claim **1**, wherein the control means includes means for measuring the time of delay for the transmitted signals to travel from the first transducer to the second transducer.

13. The device of claim **1** wherein said support structure includes a platform, said pointer being removably attachable to said platform and operable when removed from said platform.

14. The device of claim **13** wherein said pointer includes switch means for indication of operation in a first mode for transmitting positional as well as rotational information when separated from said platform, and in a second mode for transmitting only rotational information when attached to said platform.

15. The input device of claim **13** wherein said pointer has three modes of operation, comprising:

a first mode in which two-dimensional signals are provided to said computer when said pointer is on a desk top;

a second mode in which three-dimensional movement signals and three rotational direction signals are provided to said computer when said pointer is not on said desk top and not on said support structure; and

a third mode in which three rotational signals are provided to said control means when said pointer is mounted on said support structure.

16. The device of claim **1** wherein said control means includes means for multiplying said attitude of said pointer by an exponential transfer function.

17. An input device for a computer comprising:

a first, stationary transducer;

a base for supporting said input device on a flat surface;

a platform for supporting a pointing device;

a coupling mechanism coupling said platform to said base to allow rotation of said platform about said base;

a rigid pointer, mounted on said platform to be rotatable in multiple directions relative to said base, said pointer including

a plurality of second transducers, each one of said plurality of second transducers being fixed relative to said pointer and to said plurality of second transducers, such that said pointer, platform and plurality of second transducers are a single, rigid unit which rotates about said base, and

at least one key for generating a user input signal;

means for transmitting signals between said first and said plurality of second transducers; and

control means, coupled to said first and said plurality of second transducers, for providing the computer an

attitude of said pointer, said control means being responsive to said user input signal to generate a cursor signal indicating movement of a cursor or a viewpoint in a direction corresponding to said attitude of said pointer.

18. The device of claim **17** wherein said support structure comprises a base having a ball fixedly mounted on top, and a platform having a socket extending from its bottom for engaging said ball such that said platform can rotate around said ball, said pointer being removably docked on top of said platform.

19. An input device for a computer comprising:

a base for supporting said input device on a flat surface;

a platform for supporting a pointing device;

a coupling mechanism coupling said platform to said base to allow rotation of said platform about said base;

a rigid pointer, mounted on said platform to be rotatable in multiple directions relative to said base, said pointer including

a plurality of second transducers, each one of said plurality of second transducers being fixed relative to said pointer and to said plurality of second transducers, such that said pointer, platform and plurality of second transducers are a single, rigid unit which rotates about said base,

at least one transducer of said plurality of transducers generating attitude signals indicating an attitude of said pointer including pitch, yaw and roll; and

control means, coupled to said pointer, for providing the computer an attitude of said pointer in response to said attitude signals.

20. The device of claim **19** wherein said pointer includes at least one key for generating a user input signal, said control means being responsive to said user input signal to generate a cursor signal indicating movement of a cursor in a direction corresponding to said attitude of said pointer.

21. An input device for a computer comprising:

a first, stationary transducer;

a base for supporting said input device on a flat surface;

a platform for supporting a pointing device;

a coupling mechanism coupling said platform to said base to allow rotation of said platform about said base;

a rigid pointer, mounted on said platform to be rotatable in multiple directions relative to said base, said pointer including a plurality of second transducers, each one of said plurality of second transducers being fixed relative to said pointer and to said plurality of transducers, such that said pointer, platform and plurality of second transducers are a single, rigid unit which rotates about said base, for generating attitude signals indicating an attitude of said pointer including pitch, yaw and roll, said pointer including at least one key for generating a user input signal;

control means, coupled to said pointer, for providing the computer an attitude of said pointer in response to said attitude signals, said control means being responsive to said user input signal to generate a cursor signal indicating movement of a cursor or a viewpoint in a direction corresponding to said attitude of said pointer.

* * * * *