United States Patent [19]

Parsons et al.

[11] **Patent Number: 5,002,170**

[45] **Date of Patent: Mar. 26, 1991**

[54] **TORQUE RESPONSIVE CLUTCH CONTROL**

[75] Inventors: **David Parsons**, Kenilworth; **Charles J. Jones**, Coventry, both of United Kingdom

[73] Assignee: **Automotive Products plc**, England

[21] Appl. No.: **469,433**

[22] PCT Filed: **Sep. 28, 1988**

[86] PCT No.: **PCT/GB88/00795**

§ 371 Date: **Apr. 6, 1990**

§ 102(e) Date: **Apr. 6, 1990**

[87] PCT Pub. No.: **WO89/03318**

PCT Pub. Date: **Apr. 20, 1989**

[30] **Foreign Application Priority Data**

Oct. 7, 1987 [GB] United Kingdom 8723547

[51] **Int. Cl.**[5] **F16P 21/04**

[52] **U.S. Cl.** **192/0.092**; 192/0.052

[58] **Field of Search** 192/0.052, 0.092

[56] **References Cited**

U.S. PATENT DOCUMENTS

4,518,064	5/1985	Windsor	192/0.052
4,565,267	1/1986	Nishikawa et al.	192/0.052
4,591,038	5/1986	Asagi et al.	192/0.092
4,618,043	10/1986	Hattori et al.	192/0.052
4,660,697	4/1987	Yoneda et al.	192/0.052
4,677,880	7/1987	Hattori et al.	192/0.052
4,874,070	10/1989	Nellums et al.	192/0.092

FOREIGN PATENT DOCUMENTS

0092950	11/1982	European Pat. Off. .
0147228	7/1985	European Pat. Off. .
0130794	3/1988	European Pat. Off. .
69 (M-286) [1506]	3/1984	Japan .
2058963	4/1981	United Kingdom .

Primary Examiner—Rodney H. Bonck
Assistant Examiner—Nicholas Whitelaw
Attorney, Agent, or Firm—Davis, Bujold & Streck

[57] **ABSTRACT**

The engine output torque of a motor vehicle is a function of the extent to which the throttle valve is open, the further the valve is open, the greater the throttle angle and the greater the output torque. Microprocessor based clutch control is provided to measure the throttle angle, determine the output torque, and automatically engage and disengage the clutch with respect to time. The clutch control also allows manual gear operation and clutch slip control.

15 Claims, 3 Drawing Sheets

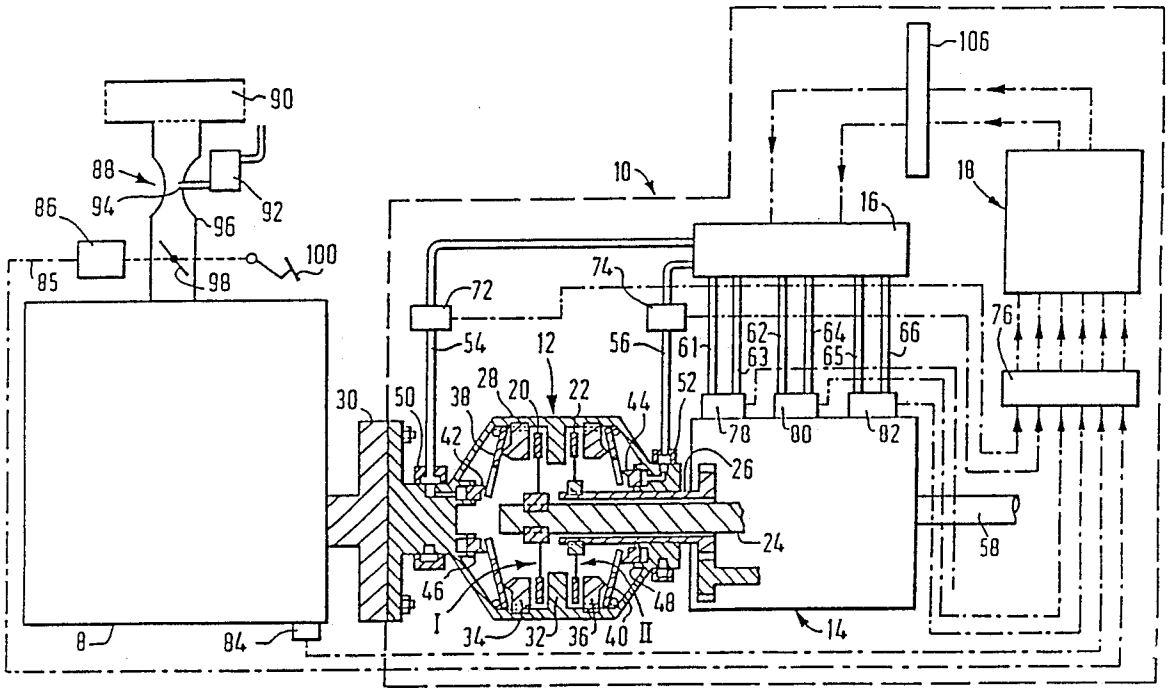

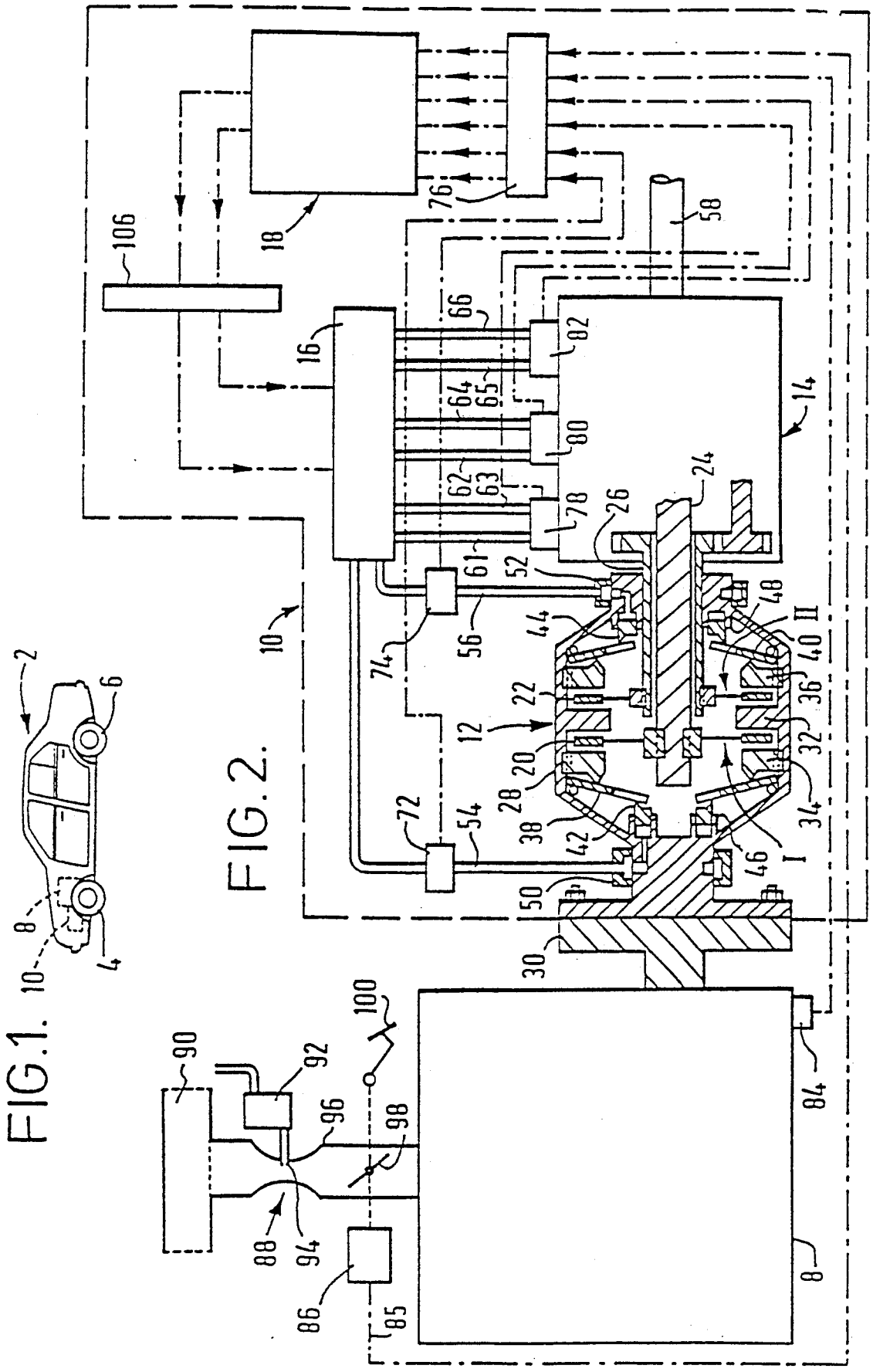
FIG. 1.
FIG. 2.
2
4
6
8
10
12
14
16
18
20
22
24
26
28
30
32
34
36
38
40
42
44
46
48
50
52
54
56
58
61
62
63
64
65
66
72
74
76
78
80
82
84
85
86
88
90
92
94
96
98
100
106
I
II

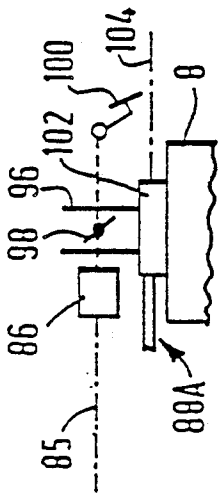
85
86
98
96
102
100
104
8
88A

FIG. 3.

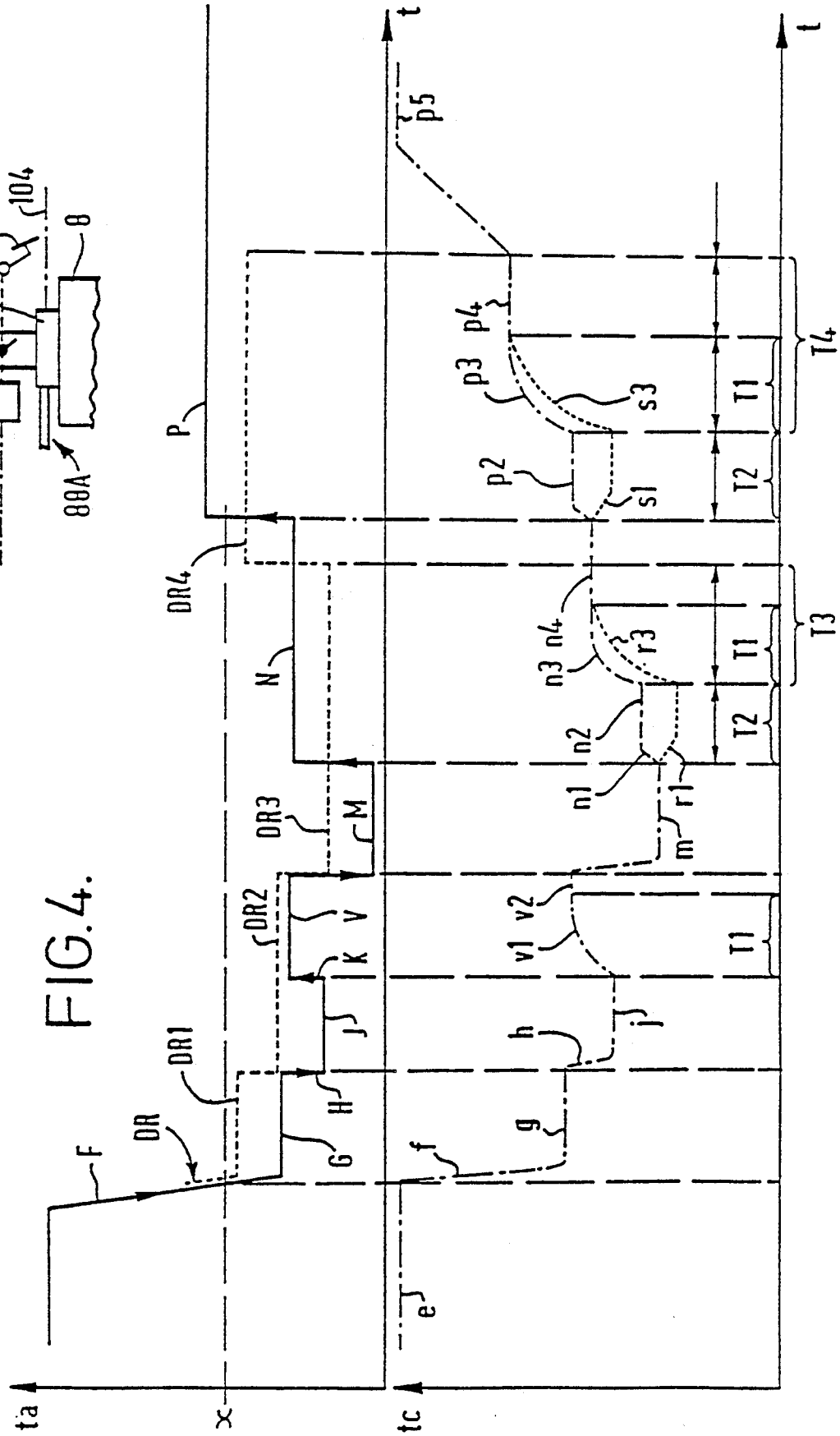
ta
x
tc
t
t
F
DR
DR1
DR2
DR3
DR4
P
N
M
G
H
J
K
V
e
f
g
h
j
v1
v2
m
n1
n2
n3
n4
r1
r3
p2
p3
p4
p5
s1
s3
T1
T2
T3
T4

FIG. 4.

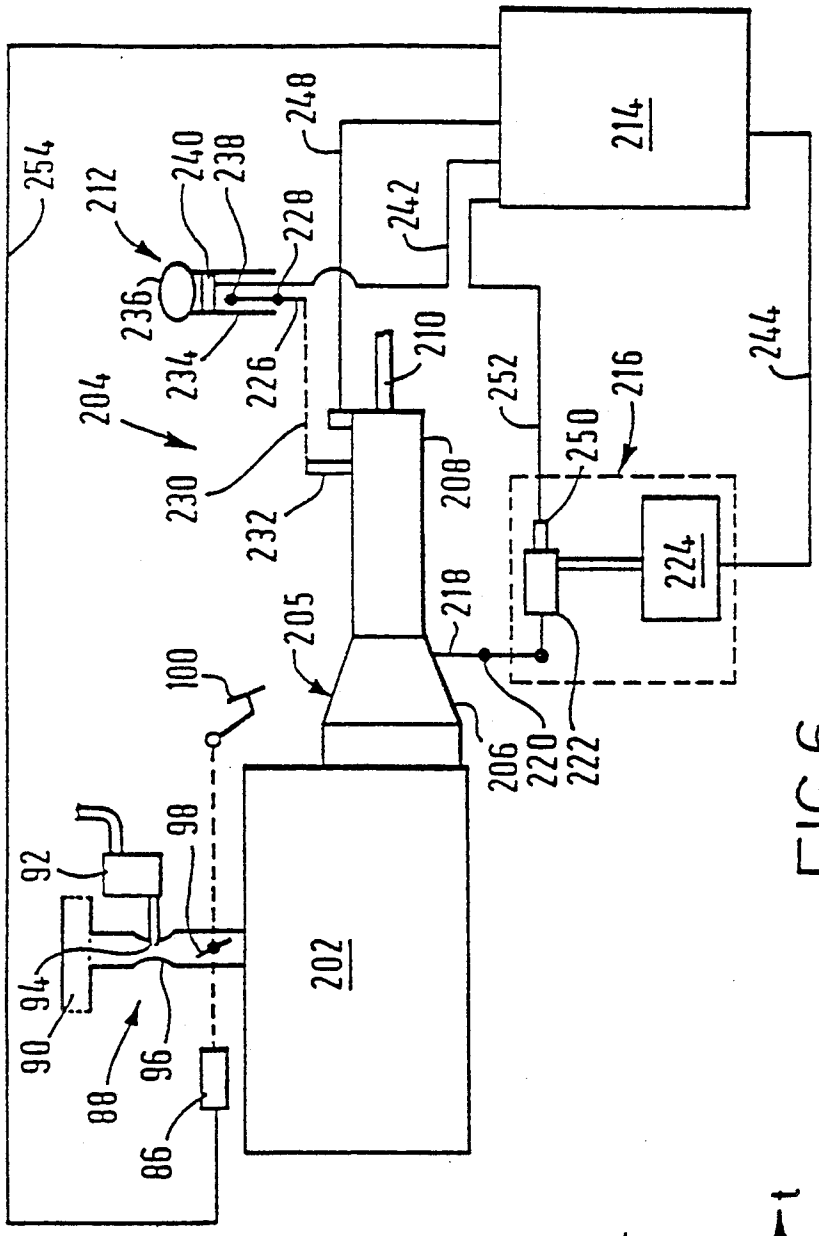
254
212
240
238
248
228
242
214
236
234
226
210
204
230
232
208
252
250
216
244
224
218
205
100
206
220
222
92
98
94
90
96
88
86
202

FIG.6.

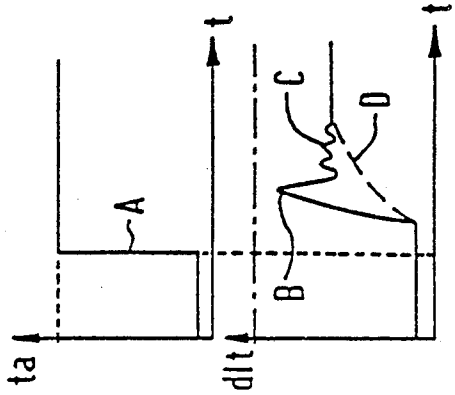
ta
t
A
dlt
t
B
C
D

FIG.5.

TORQUE RESPONSIVE CLUTCH CONTROL

This invention concerns controlling operation of clutch means in a motor vehicle.

The motor vehicle is of a type (hereinafter called "the type referred to") comprising

an internal combustion engine to generate engine torque,

fuel supply means to supply fuel to the engine, said fuel supply means having a torque demand condition having a torque demand value which is selectively variable over a range of values extending from a minimum to a maximum demand for torque, the fuel supply means being controllable whereby the amount of fuel supplied is variable with variation in said torque demand value, and wherein the engine power output is increasable in response to increasing the fuel supply to said engine,

drive line means to transmit rotary motion from the engine to at least one ground running wheel, said drive line means comprising changeable ratio gear means and clutch means between said engine and said gear means whereby the power output from the engine is input to the clutch means to be transmitted by the clutch means to give a power output providing a power input to the gear means, and said clutch means having a torque transmitting capacity which is variable between a predetermined maximum and zero whereby when the torque input to the clutch means exceeds the transmitting capacity clutch slip occurs and the power output is less than the power input to said clutch means, and

control means for automatically causing a reduction of said torque transmitting capacity upon a demand for a change of ratio in said gear means being observed by said control means and for automatically increasing said torque transmitting capacity subsequent to the ratio change being effected.

In a first known form of motor vehicle of the type referred to the gear means, clutch means and control means all form a fully automatic gear box system in which gear ratio changes are automatically performed in response to signal inputs to the control means. The signal inputs represent, for example, engine speed and the torque demand value, and are provided from sensors. A gear ratio change takes place when the input signals have certain predetermined values.

In an automatic gearbox having a torque converter and a lock-up clutch, the torque transmitting capacity of the lock-up clutch may be merely reduced when a gear ratio change is required and performed, and subsequent to the ratio change the torque transmitting capacity of the lock-up clutch is increased again.

In a second known form of vehicle of the type referred to the clutch means and control means form a semi-automatic transmission system in which the vehicle has no clutch pedal but has a gearbox in which the gear ratio changes are performed or at least initiated by manual action by the driver. Gear ratio changes may be effected by the manual effort exerted by the driver moving a gear lever when the driver desires the gear ratio change to be made or the changes may be powered by motor means, for example electric or fluid powered motors or actuators in response the driver operating manual means, for example a lever, switch or push-button. The initiating and completing of such a gear ratio change are detected by sensor means and corresponding signals sent to the control means which automatically causes the torque transmitting capacity of the clutch means to be reduced to zero just before the ratio change and automatically restores torque transmitting capacity immediately after the ratio change. Whether or not a gear change is made is at the driver's discretion and irrespective of a fuel supply magnitude demand signal being sent, for example via a mechanical linkage from an accelerator pedal, to a control of the torque demand condition of the fuel supply means. To prevent the engine racing during a change of gear ratio the control means may also provide an override fuel supply magnitude demand signal (capable of overriding the signal from the accelerator pedal) to automatically ensure that the supply of fuel is of a low amount whilst the torque transmitting capacity of the clutch means is zero.

In the case of both the first and second forms of vehicle a jolt and vibrations can occur at tip-in. Tip-in is a situation where initially the vehicle is travelling forwards with the accelerator pedal in a position corresponding to a demand for a low supply of fuel to the engine (i.e. a low engine torque demand), and the vehicle is in a condition of over-run where the momentum of the vehicle is driving the engine; then the accelerator pedal is suddenly depressed or tipped-in by the driver. This causes a sudden increase in the supply of fuel to the engine and a rapid increase in engine output torque. Accordingly there is a sudden surge in the torque in the drive line means which causes free play in the drive line means to be taken up as the driving direction suddenly reverses from over-run to engine drive. It is this taking-up of free play which causes the jolt and vibrations, and these disturbances are felt by the driver who may find the experience a nuisance or disconcerting in addition to any damaging effect the disturbances may have on the drive line means.

An object of the invention is to provide a vehicle of the type referred to in which large torque surges in the drive line means at tip-in, or at some other sudden increase in demand for fuel from a low level of demand, are avoided or at least reduced.

According to the invention there is provided a motor vehicle of the type referred further comprising observing means to produce a torque demand value signal which is a function of said torque demand value said control means being responsive to said torque demand valuesignal and arranged to control the clutch means in a manner which produces a torque transmitting capacity in the clutch means which is a function of said torque demand value whereby at least below a predetermined magnitude of said torque demand value the torque transmitting capacity of said clutch means is less than said maximum, and the control mean being arranged such that whilst the vehicle continues to run in the same gear ratio and there is an occurrence of a said torque demand value signal signifying an increase in said torque demand value from a magnitude less than said predetermined magnitude the control means automatically responds to increase the torque transmitting capacity of the clutch means such that during at least part of the time of said increase the torque transmitting capacity of the clutch means is less that the output torque from the engine whereby slipping of said clutch means occurs.

In the fuel supply means, the torque demand condition at any instant may be (or may be a function of) the attitude or position of a relatively movable component part of the fuel supply means, the position of which component part is a function of the amount of fuel being supplied. For example, in the case of a petrol driven

engine, the fuel supply means may comprise a carburetor or a fuel injection system. In either case the torque demand condition can be the attitude of a throttle valve controlling the size of a throttle opening or can be the size of the throttle opening. For example, the torque demand value corresponding to the minimum demand for torque can correspond to the throttle opening being of a minimum size set by the throttle valve, i.e., 0% throttle and the torque demand value corresponding to a maximum demand for torque can correspond to the throttle opening being of maximum size set by the throttle valve, i.e., 100% throttle. When the engine is a diesel engine the fuel supply means may comprise a fuel pump in which the torque demand value of the torque demand condition may be represented by or be a function of the condition or position of the rack. In the case of both petrol and diesel engines, the torque demand value can be represented by or be a function of the accelerator pedal position at any instant with respect to a reference position for the pedal.

The invention will now be further described, by way of example, with reference to the accompanying drawings in which:

FIG. **1** is a diagrammatic illustration of a motor vehicle formed according to the invention:

FIG. **2** is a diagrammatic illustration partly in section of an internal combustion engine with a carburetor, and drive line means comprising an automatic gear box for the vehicle in FIG.**1**;

FIG.**3** is a fragment diagrammatically illustrating a modification to the arrangement in FIG.**2** wherein the carburetor is replaced by fuel injection means;

FIG. **4** is a set of diagrams or graphical representations illustrating operation of the clutch means in relation to the throttle opening size in the vehicle formed according to the invention in FIG.**1**;

FIG.**5** is a set of diagrams or graphical representations, of variation of throttle angle ta and drive line torque dlt with respect to time t, and illustrate in full lines a sudden increase in drive line torque dlt in response to a sudden increase in demand for fuel at tip-in in a known motor vehicle; the torque shown in dash line illustrating an objective it is desired to aspire towards in a motor vehicle formed according to the invention, and

FIG. **6** shows a modification which can be applied to the vehicle in FIG.**1** and is a diagrammatic illustration partly in section of an internal combustion engine with fuel supply means and drive line means comprising a semi-automatic transmission.

In the drawings like or similar parts are identified by the same reference numerals.

With reference to FIG.**5**, in a known motor vehicle of the type referred to in which fuel and air is supplied to the internal combustion engine by means of a carburetor, the carburetor has a throttle comprising an induction passage which can be opened and closed by varying amounts by a butterfly throttle valve. The extent to which the passage is opened or closed being the throttle size determined by the position or angle (throttle angle ta), between maximum and minimum values, of the throttle valve i.e. the greater the throttle angle the greater the throttle size, and therefore the greater the value of the torque demand condition in the fuel supply means comprising the carburetor. The amount of fuel and air supplied to the engine via the throttle is in a direct proportion to the throttle angle. At tip-in the throttle angle ta is suddenly increased as indicated at A in FIG. **5**, the consequence on drive line torque dlt is a torque surge spike B and torque fluctuation C causing the aforementioned jolt and vibrations.

With a view to ironing out the torque spike B and fluctuations C, the motor vehicle to be described with reference to FIGS. **1** to **4** endeavours at tip-in, to increase drive line torque dlt in accordance with dash part D (FIG.**5**).

VEHICLE WITH AUTOMATIC TRANSMISSION

Referring now to FIGS. **1** and **2**, a motor vehicle **2** has front ground running wheels **4**, rear wheels **6**, an internal combustion engine **8** and drive line means comprising an automatic gear box **10** driving the two front wheels **4** (only one shown). In addition or alternatively, the rear wheels could be driven.

The automatic gear box **10** comprises a clutch system **12**, a gear box **14**, an hydraulic control **16**, and an electronic control **18** comprising computer means containing a predetermined controlling program.

The clutch system **12** is a twin clutch system represented purely illustratively and may be of the wet plate kind. It has a pair of driven clutch plates **20** and **22** each splined to a respective gear box input shaft **24** and **26**. The clutch system has a rotatable cover **28** secured to rotate with an engine fly-wheel **30**. Both rotationally and axially fast with the cover **28** is an annular clutch counter-pressure plate **32**. A pair of annular clutch pressure plates **34** and **36** are splined at their peripheries to the cover **28** so as to be rotationally fast therewith but axially slidable relatively to the cover. Diaphragm springs **38** and **40** are arranged for acting respectively on the pressure plates **34** and **36**. Associated with each spring **38**, **40** is a respective thrust member **42** or **44** formed as an annular piston sliding in a respective hydraulic cylinder **46** or **48** at each end of the clutch cover **28**. The clutch cover **28** can rotate relatively to the shafts **24** and **26** and relatively to stationary, annular, hydraulic supply cuffs **50** and **52** enabling the supply of hydraulic pressure to the cylinders **46** and **48** respectively via conduits **54** and **56** and the relief of hydraulic pressure in the cylinders also via the conduits. Accordingly, applying hydraulic pressure to the cylinder **46** urges the thrust member **42** which pushes the diaphragm spring **38** which urges the pressure plate **34** to clamp the clutch driven plate **20** against the counter-pressure plate **32**. Since the torque transmitting capability or capacity of engaged clutch **34**, **20**, **32** (hereinafter called Clutch I) is directly proportional to the force with which the driven plate **20** is clamped against the counter-pressure plate **32** it follows that the torque transmitting capacity of the engaged Clutch I is directly proportional to the hydraulic pressure in the cylinder **46**, i.e. the greater the hydraulic pressure the greater the torque transmitting capacity. Relieving the hydraulic pressure in the chamber **46** allows the Clutch I to disengage and eventually reduces its torque transmitting capacity to zero. The other clutch **36**, **20**, **32** (hereinafter called Clutch II) is operated by applying and relieving hydraulic pressure via conduit **56**, the operation of Clutch II being substantially similar to that of Clutch I. When the Clutch II is engaged it has some torque transmitting capacity, and torque up to the value of that capacity can be input to the gear box **14** by the sleeve shaft **26**. Whereas if Clutch I is engaged torque up to its capacity value can be input to the gear box **14** by the shaft **24**.

The change speed gear box **14** is represented diagrammatically and symbolically and can provide six

selectable gear ratio changes each giving a corresponding torque output on output shaft **58** for transmission to the road wheels **4**. The six changeable ratios constitute first, second, third, fourth, fifth and reverse gears. The gear box **14** includes hydraulically operated gear engagement means (not shown) operated in accordance with the hydraulic pressures obtaining in conduits **61**, **62**, **63**, **64**, **65** and **66** as controlled by the hydraulic control **16** also connected to the conduits **54** and **56**.

The arrangement is such that when any one of the first, third or fifth gear is engaged the vehicle is only driven by that gear when Clutch I is engaged, and when any one of the second, fourth or reverse gear is engaged the vehicle is only driven by that engaged gear when Clutch II is engaged. Also the controls **16** and **18** are arranged so that when Clutch I engages, Clutch II automatically disengages and vice-versa.

Hydraulic pressure sensors **72** and **74** ar provided in the conduits **54** and **56** to provide electrical signals indicative of the fluid pressures obtaining in those conduits, the electrical signals being transmitted to an interface **76**. Associated with the gear box **14** are gear engaged indicators **78**, **80** and **82** transmitting to the interface **76** electrical signals indicating which of the first, second, third, fourth, fifth or reverse gears has/have been engaged. The interface **76** further receives from transducer **84** an electrical signal indicative of the engine speed and on channel **85**, from transducer **86** an electrical signal indicative of throttle opening size in fuel supply means **88** formed by a carburetor with an air filter **90**. The carburetor comprises a float chamber **92**, a fuel jet **94** and a throttle comprising an induction passage **96** containing a pivotable throttle valve **98**. The vehicle has an accelerator pedal **100** which can be connected mechanically by known means to the throttle valve **98** so that the more the pedal is depressed the more the throttle valve is rotated away from its position corresponding to minimum throttle opening towards its position of maximum throttle opening, the valve **98** returning towards its minimum throttle position as the pedal is released. For any given engine speed the more the throttle is opened the greater the amount of fuel and air supplied to the engine **8**. The throttle at minimum size may be referred to as 0% throttle or the throttle valve **98** as being at 0° throttle angle. At maximum size the throttle may be referred to as 100% throttle, the throttle valve **98** having been rotated through its greatest extent, for example about 80° or so, from its minimum throttle position to open wide the passage **96**; i.e. passage **96** is wide open at a throttle angle of 80° or so. Therefore the transducer **86** may be arranged to observe the angular position of the throttle valve **98**, relative to its position at minimum throttle size and provide an electrical signal indicative of the relative angular position of the throttle valve (throttle angle) and thus indicative of the size of the throttle opening which is thus indicative of the amount of fuel and air being supplied to the engine **8**. Alternatively since there is a correspondence between the size of the throttle opening and the position of the accelerator pedal **100**, the transducer **86** could be arranged to observe the position of the pedal and provide the signal indicative of throttle opening size corresponding to the. pedal position. Instead of a mechanical (or hydraulic) link between the pedal **100** and the throttle valve **98** the link could be of a kind wherein the throttle valve **98** is rotated by motor means, for example an electric motor, in response to electric or other signals produced by a signal generator in accordance with the position of the accelerator pedal **100**.

The alternative fuel supply means **88** A in FIG.3 is a fuel injection system in which fuel injector means **102** in response to signals on **104** from an electronic control, for example the control **18**, supplies fuel to the engine **8** in amounts directly proportional to the size of the throttle opening as determined by the angular position of the throttle valve **98** observed by the transducer **86**.

Interface **76** may be arranged to digitise or otherwise render the electrical signal inputs thereto compatable with the computer **18** to serve as data inputs to the latter. Output signals from computer **18** are input to an interface **106** which converts them to signals, for example analogue signals, compatable with the hydraulic control **16**.

The computer control **18** is loaded with a program comprising gear ratio running and gear ratio changing maps which, in accordance with the engine speed and throttle angle data supplied to control **18**, determines through which gear ratio drive is required of any instant. Control **18** also anticipates in the case of drive through second, third and fourth gears which is the next likely gear ratio (up or down) through which drive will be required and causes that ratio to be engaged whilst the Clutch I or II corresponding to that ratio is in a disengaged state. In the case of driving through the first gear ratio, the second gear ratio is caused to be automatically in engagement by the control **18** in readiness (Clutch II being in disengaged state). Whereas when driving is through the fifth gear ratio the control **18** automatically causes the fourth gear ratio to be in engagement in readiness (Clutch II being again in disengaged state). If, for example, driving is through the second gear ratio the computer control **18** has caused hydraulic control **16** to apply hydraulic pressure on conduit **62** to engage the second gear ratio and has caused the relief of hydraulic pressure in conduit **54** so that Clutch I is disengaged and the application of pressure on conduit **56** to engage Clutch II. In relation to the program maps the computer control analyses the engine speed and throttle angle data it continuously receives and determines what is the next likely gear change to be needed. If it is to be a change up then the computer control **18** instructs the hydraulic control **16** to supply pressure on conduit **63** to engage the third gear ratio. If the data inputs to computer **18** eventually satisfy the program criteria corresponding to running in third gear, the computer instructs hydraulic control **16** to relieve the pressure in conduit **56** so that Clutch II disengages whilst simultaneously applying pressure on conduit **54** to engage Clutch I. Therefore driving ceases to be through second gear and becomes established through third gear.

Manual means (not shown) can be provided to operate the hydraulic control **16** to cause the engagement of the reverse gear ratio by pressure on conduit **66** and the engagement of Clutch II when drive through reverse gear is required.

In the automatic gear box **10**, the torque transmitting capacity of Clutch I or Clutch II is directly proportional to the hydraulic pressure in cylinder **46** or **48** respectively. That hydraulic pressure is a function of both the engine speed and the throttle angle and is provided by the hydraulic control **16** under instructions from computer control **18** programmed to instruct the desired hydraulic pressure in accordance with the engine speed and throttle angle data the computer re-

ceives, when gear changing is taking place or the vehicle is running in any gear ratio.

When the vehicle is running in any gear ratio the torque transmitting capacity of the corresponding Clutch I or II has a predetermined maximum value (capable of transmitting the maximum engine output torque to the gear box **14**) in consequence of applying a predetermined maximum hydraulic pressure to the cylinder **46** and **48**.

TIP-IN CONTROL

In FIG. **4** variation in throttle angle ta and clutch torque transmitting capacity tc are shown with respect to time t.

With reference to FIG.**4**, if one takes as an example that the vehicle is running in fourth gear, section e of the torque diagram shows that Clutch II has the aforesaid predetermined maximum torque transmitting capacity due to the pressure in cylinder **48** being at the predetermined maximum. Furthermore it will be assumed that the engine speed remains within a predetermined speed range such that the computer **18** will not instruct a gear change.

If the driver releases the accelerator pedal the throttle angle ta decreases as signified by section F in FIG.**4**. A throttle angle value x is predetermined or selected being an appropriate maximum throttle angle below which the occurrence of transmission line disturbance, in consequence of a sudden increase in throttle angle, is to be eliminated or at least reduced. The throttle angle x can be called the "tip-in threshold" and may be a few degrees, for example substantially 10° . When the throttle angle ta decreases to at least the "tip-in threshold" a section of program, in computer **18**, provided for tip-in control comes into effect. As a result, below the tip-in threshold the torque transmitting capacity of the clutch is modulated by the throttle angle, and the computer calculates a detect reference DR which (for the time being) may be simply understood as a numerical value equal to the throttle angle plus a small positive, numerical "detect off-set". That detect off-set is a predetermined number of angular degrees, for example substantially 2°. For a throttle angle of 7° the calculated detect reference would be 9° (i.e. 7°+2°). Therefore as the throttle angle decreases in accordance with section F in FIG. **4**, when it falls below the tip-in threshold x the computer **18** instructs the hydraulic control **16** to relieve pressure in clutch cylinder **48** (FIG.2) to reduce the torque capacity tc of Clutch II as indicated by diagram section f until it reaches a constant value at section g for the constant throttle angle at section G for which the computer has also established the detect reference value shown by section DR**1**. The value of the torque capacity below tip-in threshold at any constant throttle angle is calculated by the computer **18** and controlled thereby in accordance with the throttle angle and engine speed data so that the torque capacity of the Clutch II is slightly greater than the torque input thereto from the gear box to drive the engine; i.e. the torque capacity of the clutch is just enough to transmit the torque which is input into the clutch.

If the throttle angle is reduced again as shown at section H in FIG.**4** to a constant value represented at . section J, the clutch torque capacity is quickly dropped further through section h to the value at section j and a new lower detect reference DR2 is established in the computer **18**.

Should, for example, the throttle angle now be suddenly increased slightly, as indicated at section K, by an amount less than the detect off-set, the level of the detect reference is maintained at DR2 even though the throttle angle at the steady section V is greater than a J. However, the computer control responds to the increase in throttle angle and over a time constant T1 causes the hydraulic control **16** to increase the hydraulic pressure in cylinder **48** (FIG.2) substantially exponentially to increase the clutch torque capacity at a controlled substantially exponential rate as represented at section v**1** for example, up to a steady value represented at section v**2**.

Whilst the clutch torque capacity is being increased in accordance with section v**1** it is possible that some clutch slip may occur before the capacity represented by v**2** is substantially attained. The time duration T**1** can be small for example substantially in the range of 300.0 milliseconds to 500.0 milliseconds, preferably substantially 300 millseconds.

Should the throttle angle be reduced to a smaller value represented by section M, then, because this is a reduction in throttle angle, the computer **18** calculates a new detect reference value shown at DR3, which is smaller than DR2. Also the torque transmitting capacity of the clutch is ramped down quickly to the throttle angle modulated level at section m.

Increasing the throttle angle suddenly to a steady value represented by section N gives the throttle angle a value greater than the current detect reference DR3 but less than the tip-in threshold. Immediately the throttle angle is increased, the computer control begins to cause some very small increase (section n**1**) in clutch torque transmitting capacity. But at the same time the computer control initiates timer means to measure a time duration T2. Because the computer control observes that the throttle angle has increased above the detect reference, the aforementioned increase in clutch torque capacity is rapidly stopped and the time delay T2 brought into effect. Therefore the clutch torque capacity is held at a low steady level (section n2) until the relatively short time delay T2, for example substantially 100.0 milliseconds, expires. Then the computer control **18** causes the torque transmitting capacity of the clutch to increase over the time T1, substantially exponentially (as indicated by section n3) up to a steady value indicated at section n4. The controlled rate of increase at n3 delays the time that the required torque capacity of n4 is attained. Consequently during the increase at n3 the torque transmitting capacity of the clutch is less than the capacity needed to transmit all the power which is input to the clutch. Thus at section n3 clutch slip occurs to reduce the chance of transmitting torque surge to the gear box from the engine.

When a driver suddenly presses on the accelerator to rapidly increase the throttle angle, there is a short delay before the increased charge of fuel and air reaches the engine. Thus there is a short delay before the engine produces the torque surge due to that increased charge. By introducing the time delay T2 to hold down the torque transmitting capacity of the clutch for that time delay, there is a greater chance that the torque surge from the engine will coincide with the controlled rate of increase in torque capacity at n3 so that the clutch slip is more likely to occur at the time of the surge. Therefore tranmission of the surge by the clutch should not occur.

When the timer means in the computer **18** measuring the time delay T2 times out, two further timer means commence in the computer. One measures the time T1 and the other measures time duration T3 which is the reset detect reference time. At the end of reset time T3, the detect reference is increased by the computer control to its new value DR4. T3 is not shorter than T1 and is preferably longer, for example substantially 500.0 milliseconds.

Regarding the detect reference DR4 and the detect references DR1, DR2 and DR3, it will be understood that whilst the throttle angle remains not greater than each of the tip-in threshold and the detect reference, then each time the throttle angle drops below its previous minimum value the detect reference is set at a new lower level. Whereas whilst the throttle angle remains below the tip-in threshold, a new increased detect reference is only set by the throttle angle being increased above the current detect reference.

Also when an increase in throttle angle is less (such as represented by section K) than the detect off-set, no time delay T2 is introduced before the torque transmitting capacity of the clutch is increased at the controlled rate over the time T1.

Taking a case where the throttle angle, for example as represented at section N (FIG.4), is below both the tip-in threshold x and the detect reference, for example DR4, now if the throttle angle is suddenly increased to a value (such as represented by section P) above both the detect reference and the tip-in threshold, this can be considered as tip-in proper. Because the throttle angle increases above the tip-in threshold DR4 the time delay T2 comes into operation and the clutch torque transmitting capacity is held down as represented by section p2. When the delay T2 expires the clutch torque transmitting capacity is increased by the computer control **18** substantially exponentially, as represented by section p3, over the time T1 up to the value represented by section p4 which again is just greater than that needed by the clutch to transmit all the power which is input thereto. Thus again whilst the torque transmitting capacity is being increased in accordance with section p3 clutch slip occurs to reduce the chance of transmitting torque surges from engine to gear box. At the same time as one of the timer means starts to measure the time T1, other timer means in the computer starts to measure a time T4 (which is relatively long, for example substantially 1.0 second) because the throttle angle is now in excess of the tip-in threshold. When time T4 expires computer control **18** exits from the section of program concerned with tip-in control and, under instruction from another program section, ramps up the torque transmitting capacity of the clutch to the predetermined maximum represented at section p5. Furthermore, because the throttle angle ta is now above the tip-in threshold no new detect reference is calculated and reference DR4 goes void at the expiry of timeout T4.

In a modification of the control which can come into effect when the throttle angle is increased above the detect reference (if the increase in throttle angle is measured by the computer **18** as being in excess of a predetermined rate) then whilst the delay time T2 is being measured out the torque transmitting capacity of the clutch is dropped (as represented by dotted sections r1 or s1) to a value less than the capacity which was needed to transmit all the power input to the clutch immediately before the increase in throttle angle. On the delay T2 expiring, the clutch torque transmitting capacity is increased at a controlled exponential rate shown at dotted section r3 or s3 up to the aforementioned values at n4 or p4. By so dropping the torque capacity and then increasing it in the controlled manner, the chance of the transmission of torque surges from the engine is much reduced. It is believed that this modification should only be used for relatively high rates of increase of the throttle angle. If it were used at low rates of increase, it might be detrimental to the engine braking effect during over-run.

With reference to FIG.4 the tip-in control has been described with reference to operation of the Clutch II whilst the vehicle is running in fourth gear, tip-in control can be applied in comparable manner to the operation of Clutch II whilst the vehicle is in second gear and to the operation of the Clutch I when the vehicle is running in first, third or fifth gear.

VEHICLE WITH SEMI-AUTOMATIC TRANSMISSION

The semi-automatic transmission concerned is of a kind (hereinafter called the kind referred to) comprising change-speed gear means having a plurality of mutually exclusive selectable gear ratio means, gear ratio selection means operable when desired by the driver to select a desired said gear ratio, clutch means interposed between the engine and a rotary motion input shaft to said change-speed gear means, and clutch control means to automatically disengage said clutch means upon occurrence of a gear ratio change demand signal initiated by the driver and to automatically re-engage said clutch means upon subsequent occurrence of a gear ratio selection.

With reference to FIG. **6** an internal combustion engine is shown at **202**, and at **204** a semi-automatic transmission of the kind referred to for a motor vehicle. The transmission comprises a clutch **205**, for example a diaphragm spring clutch, within a bell-housing **206** and a change-speed gearbox **208** having an output shaft **210** for supplying rotary drive to one or more road wheels, and a rotary motion input shaft (not shown) on which is mounted in known manner a clutch driven plate. Gearbox **208** comprises a plurality of mutually exclusively selectable gear ratios (know per se) any desired one of which is selectable (in the course of a driver making a gear change) by a suitable pre-determined manual movement of a gear shift lever **212** to dis-engage or de-select the said ratio currently selected and then select or engage any desired said gear ratio. A clutch control for automatically engaging and disengaging the clutch comprises an electronic control **214** and a fluid flow control **216**. The electronic control comprises computer means. The clutch is disengaged and re-engaged using a release lever or fork **218** pivoted at **220** and interacting in known manner with the clutch. A fluid pressure piston and cylinder unit or actuator **222** acts on the lever **218** so that the rate and degree of engagement or disengagement of the clutch at any instant is controlled by the amount of fluid in the actuator **222**. The amount of fluid, which may be hydraulic fluid, acting in actuator **222** is controlled by a fluid pressure supply and control system **224** forming the fluid flow control **216** with the actuator. Shift lever **212** includes a shaft **226** provided with a known gear lever pivot **228** permitting the shift lever a degree of universal movement. Shaft **226** is connected by any means **230** known per se for conveying movement of the shift lever **212** to a selection crank arm **232** causing selection and de-

selection of any desired said gear ratio when the shift lever **212** is moved according to the gear shift pattern. In addition to the shaft **226** the gear shift lever **212** also comprises a tube **234** (shown in section) surmounted by a knob **236**. Tube **234** is mounted by a pivot **238** on the shaft **226**. Knob **236** is intended for application of manual force directly thereto by the hand of the driver, for changing gear. When no manual force is applied the tube **234** adopts a centralised or initial position with respect to the shaft **226** under the action of resilient means (not shown) acting between the shaft and tube. On the other hand when sufficient manual force is applied to the knob **236** the tube **234** initially tilts slightly relative to the lever **226**, about pivot **238**, before the lever **226** is moved by further force on the tube to move the selection crank arm **232**. This initial tilting of the tube **234** is taken as indicating a wish by the driver to change gear, and tilt sensor means **240** gives a tilt signal on channel **242** when a tilt has occurred. In response the electronic control **214** gives an output disengage clutch signal on channel **244** causing clutch control **216** to automatically disengage the clutch **205**, thereafter, selection of any desired gear ratio is observed by sensor **246** providing a gear selection completed signal on channel **248**. In response the control **214** gives an output re-engage clutch signal on channel **244** causing the control **216** to automatically re-engage the clutch **205**.

The extent of clutch engagement or torque transmitting capacity of the clutch **205** is a function of the fluid pressure prevailing in the actuator **222** which is provided with a pressure sensor **250** to provide an output signal on channel **252** corresponding to the torque transmitting capacity of the clutch. Alternatively this same information could be provided by a sensor observing the position of a piston in the actuator **222** or observing the attitude of the release fork **218**. Throttle transducer **86** provides signals on channel **254** representative of the throttle opening size.

The computer in the electronic control **214** is programmed to vary the torque transmitting capacity of the clutch **205** in the same manner as the torque transmitting capacity tc is varied as described above with reference to FIG.4 when the throttle angle in the system in FIG. **6** is varied in like manner to the variation of the throttle angle ta in FIG.4.

If desired the selection crank arm **232** can be moved to change gear by motor means or by fluid pressure operated actuator means. In either case the motor means or the actuator means respond to control means responsive to manual operation, by the driver, of lever, switch, or push-button means.

It will be appreciated that if the engine **8** or **202** is a diesel engine then the fuel supply means **88** in the form a carburetor in FIG.2 and **6** would be replaced by an in injection and fuel pump system controlled by an accelerator pedal. In most cases the transducer **86** could be arranged to observe the attitude or position of either a fuel rack or a control therefore or to observe the position of the accelerator pedal.

VEHICLE WITH ALTERNATIVE AUTOMATIC GEARBOX

In a motor vehicle having an automatic gearbox with a torque convertor and an hydraulically operated lock-up clutch, that clutch can be slipped at tip-in and operated in a manner similar to that shown in and described above with reference to FIG.4.

We claim:

1. A motor vehicle comprising:

an internal combustion engine to generate engine torque,

fuel supply means to supply fuel to the engine, said fuel supply means having a torque demand condition having a torque demand value which is selectively variable over a range of values extending from a minimum to a maximum demand for torque, the fuel supply means being controllable whereby the amount of fuel supplied is variable with variation in said torque demand value, and wherein the engine power output is increasable in response to increasing the fuel supply to said engine,

drive line means to transmit rotary motion from the engine to at least one ground running wheel, said drive line means comprising changeable ratio gear means and clutch means between said engine and said gear means whereby the engine power output is input to the clutch means to be transmitted by the clutch means to give a power output providing a power input to the gear means, and said clutch means having a torque transmitting capacity which is variable between a predetermined maximum and zero whereby when the torque input to the clutch means exceeds the transmitting capacity clutch slip occurs and the power output is less than the power input to said clutch means, and

control means for automatically causing a reduction of said torque transmitting capacity upon a demand for a change of ratio in said gear means being observed by said control means and for automatically increasing said torque transmitting capacity subsequent to the ratio change being effected,

and observing means to observe and produce a tip-in signal which is a function of said torque demand value, said control means being responsive to said torque demand value signal and arranged to control the clutch means in a manner which produces a torque transmitting capacity in the clutch means which is a function of said torque demand value whereby at least below a predetermined magnitude of said torque demand value the torque transmitting capacity of said clutch means is less than said maximum, and the control means being arranged such that whilst the vehicle continues to run in the same gear ratio and there is an occurrence of a said tip-in signal signifying an increase in said torque demand value from a magnitude less than said predetermined magnitude the control means automatically responds to increase the torque transmitting capacity of the clutch means such that during at least part of the time of said increase the torque transmitting capacity of the clutch means is less than the output torque from the engine whereby slipping of said clutch means occurs.

2. A motor vehicle as claimed in claim **1**, wherein in response to occurrence of a said tip-in signal said control means automatically causes an increase in the torque transmitting capacity of the clutch means over a predetermined period of time.

3. A motor vehicle as claimed in claim **1** wherein when the torque demand value is less than said predetermined magnitude said control means is arranged to set the torque transmitting capacity to the clutch means at a value which is slightly more than that needed for the clutch means to transmit the power which is being input to the clutch means and on occurrence of a said tip-in signal said control means is arranged to respond to

increase the clutch torque transmitting capacity from a value set before said occurrence to an increased set value.

4. A motor vehicle as claimed in claim **1** wherein the rate of increase in torque transmitting capacity of the clutch means is substantially an exponential increase in capacity with respect to time.

5. A motor vehicle as claimed in claim **1** wherein said control means (**16, 18; 214, 216**) is arranged such that at the occurrence of a said tip-in signal the increase in clutch torque transmitting capacity is substantially initiated after a time delay from the occurrence of said tip-in signal.

6. A motor vehicle as claimed in claim **1** wherein the control means is arranged to respond to an occurrence of a said tip-in signal to reduce the torque transmitting capacity of the clutch means before said torque transmitting capacity is automatically increased as a consequence of the occurrence of said tip-in signal.

7. A motor vehicle as claimed in claim **6**, wherein the rate of said increase in the torque transmitting capacity of the clutch means is substantially an exponential increase in capacity with respect to time subsequent to said decrease in torque transmitting capacity of the clutch means caused by said control means responding to the occurrence of a said tip-in signal.

8. A motor vehicle as claimed in claim **6** wherein said reduction in torque transmitting capacity occurs during a predetermined time delay.

9. A motor vehicle as claimed in claim **5** wherein said time delay is of a predetermined duration.

10. A motor vehicle as claimed in claim **1** wherein when the torque demand value is less than said predetermined magnitude the control means is arranged to establish a detect reference DR having a value which is a predetermined function of the torque demand value and greater than said torque demand value.

11. A motor vehicle as claimed in claim **10** wherein said control means is arranged such that at the occurrence of a said tip-in signal the increase in clutch torque transmitting capacity is substantially initiated after a time delay from the occurrence of said tip-in signal and the control means is arranged so that said time delay occurs in consequence of said tip-in signal being produced by the torque demand value increasing to a value at least equal tot he detect reference.

12. A motor vehicle as claimed in claim **10** wherein the control means is arranged so that when the detect reference value current at the time of an occurrence of a said tip-in signal is exceeded by the increased torque demand value then after a time delay from said occurrence of said tip-in signal the control means establishes a new detect reference having an increased value which is a said function of the increased torque demand value.

13. A motor vehicle as claimed in claim **10** wherein provided the torque demand value remains below the detect reference value, the detect reference value is a said function of the smallest torque demand value to which the torque demand value has been reduced.

14. A motor vehicle as claimed in claim **1** wherein the vehicle is provided with an automatic system for automatically changing from one gear ratio to another in said changeable ratio gear means, during travel of the vehicle.

15. A motor vehicle as claimed in claim **1** wherein the drive line means comprises a semi-automatic transmission for changing from one gear auto to another during travel of the vehicle, said semi-automatic transmission comprising change-speed gear means having a plurality of mutually exclusive selectable gear ratio means, gear ratio selective means operable when desired by the driver to select a desired said gear ratio, clutch means interposed between the engine and a rotary motion input shift to said change-speed gear means, and clutch control means to automatically disengage said clutch means upon occurrence of a gear ratio change demand signal initiated by the driver and to automatically re-engage said clutch means upon subsequent occurrence a gear ratio selection.

* * * * *

UNITED STATES PATENT AND TRADEMARK OFFICE

CERTIFICATE OF CORRECTION

PATENT NO. : 5,002,170

DATED : March 26, 1991

INVENTOR(S) : David PARSONS & Charles John JONES

It is certified that error appears in the above-identified patent and that said Letters Patent is hereby corrected as shown below:

Column 14, line 6 change "tot he" to --to the--;
line 27 change "auto" to --ratio--;
line 31 change "selective" to --selection--; and
line 34 change "shift" to --shaft--.

Signed and Sealed this

Fourth Day of August, 1992

Attest:

DOUGLAS B. COMER

Attesting Officer

Acting Commissioner of Patents and Trademarks