US007575005B2

(12) **United States Patent**
Mumford et al.

(10) **Patent No.: US 7,575,005 B2**
(45) **Date of Patent: Aug. 18, 2009**

(54) **MASK ASSEMBLY WITH INTEGRATED SENSORS**

(75) Inventors: **John Robert Mumford**, Mississauga (CA); **Ronald Leon Kurtz**, Oakville (CA); **Jianping Wu**, Misissauga (CA)

(73) Assignee: **Excel-Tech Ltd.**, Oakville, Ontario (CA)

(*) Notice: Subject to any disclaimer, the term of this patent is extended or adjusted under 35 U.S.C. 154(b) by 764 days.

(21) Appl. No.: **11/131,284**

(22) Filed: **May 18, 2005**

(65) **Prior Publication Data**

US 2005/0268916 A1 Dec. 8, 2005

Related U.S. Application Data

(60) Provisional application No. 60/571,890, filed on May 18, 2004, provisional application No. 60/571,944, filed on May 18, 2004, provisional application No. 60/571,942, filed on May 18, 2004.

(51) **Int. Cl.**
A62B 9/00 (2006.01)

(52) **U.S. Cl.** **128/205.23**; 128/206.21; 600/544

(58) **Field of Classification Search** 128/205.23, 128/206.21, 205.25, 206.11, 206.12, 206.18, 128/206.24, 206.26, 206.27, 206.28, 207.11, 128/207.13, 27.18; 600/534, 537, 538, 544, 600/545

See application file for complete search history.

(56) **References Cited**

U.S. PATENT DOCUMENTS

3,313,293 A 4/1967 Chesebrough et al.
3,669,119 A 6/1972 Symmes
3,675,649 A 7/1972 Basham et al.
4,928,696 A 5/1990 Henderson et al.
5,245,995 A 9/1993 Sullivan et al.
5,280,791 A 1/1994 Lavie
5,353,788 A 10/1994 Miles
5,398,682 A 3/1995 Lynn
5,479,934 A 1/1996 Imran
5,485,851 A 1/1996 Erickson
5,645,054 A 7/1997 Cotner et al.
5,662,101 A 9/1997 Ogden et al.
5,682,878 A 11/1997 Ogden
5,794,615 A 8/1998 Estes
5,803,065 A 9/1998 Zdrojkowski et al.

(Continued)

OTHER PUBLICATIONS

Multi-Centre Comparison of Five Eye Movement Detection Algorithms. Journal of Sleep Research, 4, pp. 119-130, 1995.

(Continued)

Primary Examiner—Steven O Douglas
(74) *Attorney, Agent, or Firm*—Bereskin & Parr LLP/S.E.N.C.R.L., s.r.l.

(57) **ABSTRACT**

Embodiments of the invention relate to a mask assembly for use in treatment systems for treating obstructive sleep apnea using continuous positive air pressure (CPAP). The mask assembly comprises a mask or nasal interface for supplying gas to the nose of a wearer of the mask assembly. The mask assembly also comprises a strap or harness attached to the mask for securing the mask assembly to the wearer and sensors located on the mask assembly for measuring physiological signals of the wearer. These physiological signals are communicated to a monitoring unit which, in association with a CPAP device, serves to determine the efficacy of the CPAP treatment and to vary operational parameters of the treatment.

29 Claims, 9 Drawing Sheets

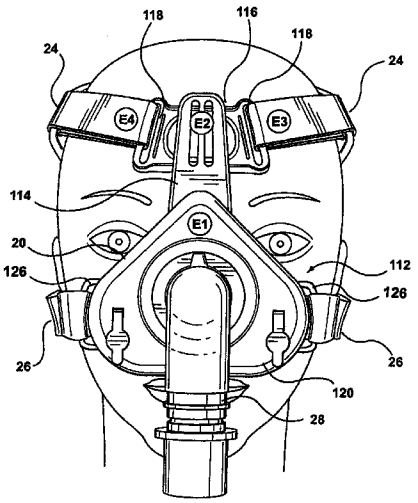

U.S. PATENT DOCUMENTS

5,901,704	A	5/1999	Estes et al.
5,904,141	A	5/1999	Estes et al.
5,970,975	A	10/1999	Estes et al.
5,999,846	A	12/1999	Pardey et al.
6,032,065	A	2/2000	Brown
6,085,747	A	7/2000	Axe et al.
6,091,973	A	7/2000	Colla et al.
6,128,521	A	10/2000	Marro et al.
6,138,675	A	10/2000	Berthon-Jones
6,230,049	B1	5/2001	Fichell et al.
6,240,921	B1	6/2001	Brydon et al.
6,272,378	B1	8/2001	Baumgart-Schmitt
6,363,270	B1	3/2002	Colla et al.
6,397,845	B1	6/2002	Burton
6,427,689	B1	8/2002	Estes et al.
6,431,171	B1	8/2002	Burton
6,467,477	B1	10/2002	Frank et al.
6,539,940	B2	4/2003	Zdrojkowski et al.
6,564,797	B1	5/2003	Mechlenburg et al.
6,609,517	B1	8/2003	Estes et al.
6,629,527	B1	10/2003	Estes et al.
6,640,806	B2	11/2003	Yurko
6,654,626	B2	11/2003	Devlin et al.
6,826,426	B2	11/2004	Lange et al.
D505,489	S *	5/2005	Sleeper D24/110.1
6,993,380	B1	1/2006	Modarres
7,204,250	B1 *	4/2007	Burton 128/205.23
7,282,027	B2 *	10/2007	Sotos et al. 600/300
2002/0029004	A1	3/2002	Starr et al.
2003/0172936	A1 *	9/2003	Wilkie et al. 128/207.18
2004/0045551	A1 *	3/2004	Eaton et al. 128/206.21
2004/0204656	A1	10/2004	Tolvanen-Laakso et al.
2005/0059898	A1	3/2005	Gobel
2005/0261559	A1	11/2005	Mumford et al.
2005/0268916	A1	12/2005	Mumford et al.
2006/0258930	A1	11/2006	Wu et al.

OTHER PUBLICATIONS

+/− 1.5g-3g Three Axis Low-g Micromachined Accelerometer. www.freescale.com, accessed May 2006.

Customised Printed Circuit Sensors & Electrodes. www.vermed.com/custom.php, accessed May 2006.

Chen et al., "A Comparison of Patient State Index and Bispectral Index Values During the Perioperative Period", Society for Technology in Anesthesia, 2002, pp. 1669-1674.

Gora et al., "Evidence of a Sleep-Specific Blunted Cortical Response . . . ", American Journal of Respiratory and Critical Care Medicine, vol. 166, 2002, pp. 1225-1234.

* cited by examiner

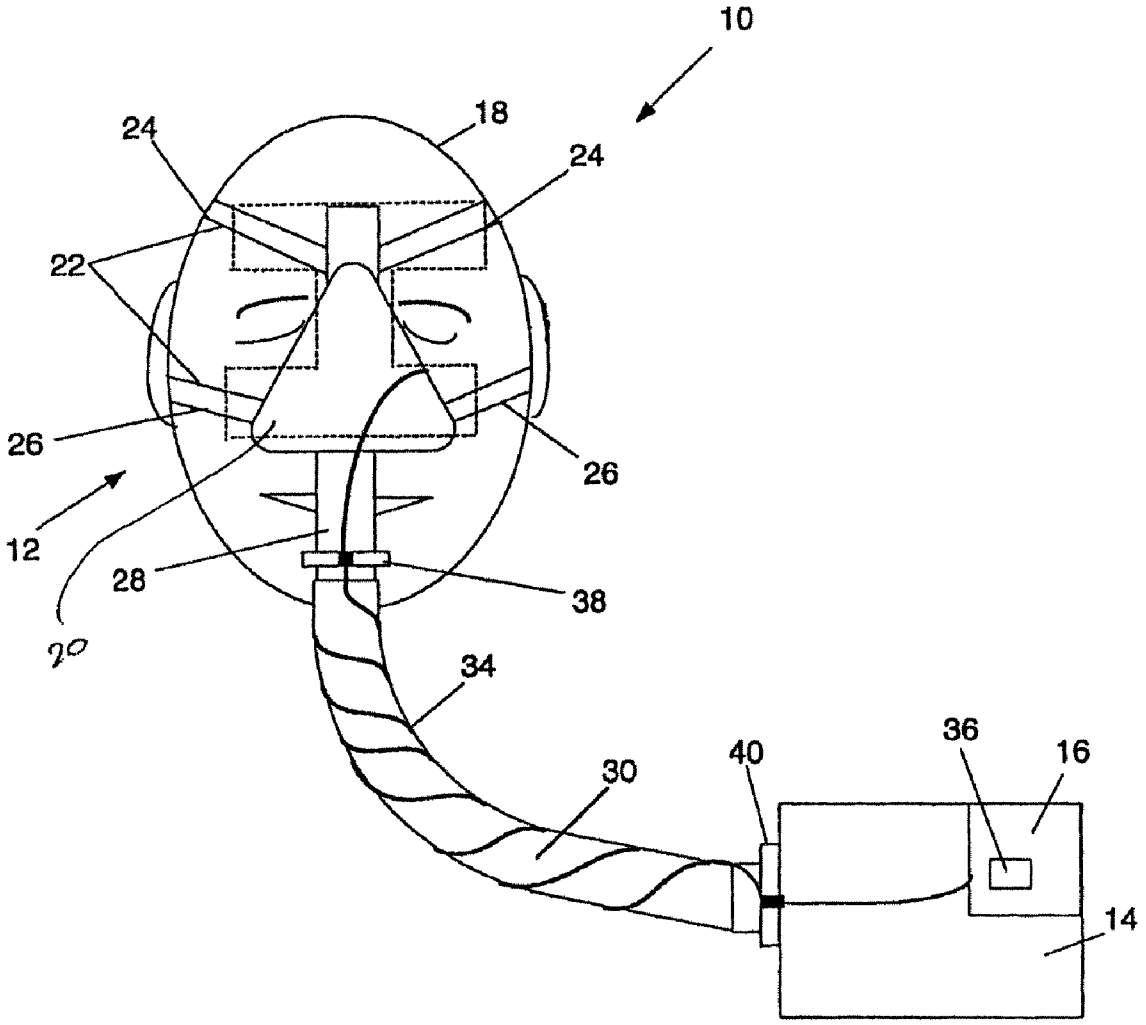

Figure 1

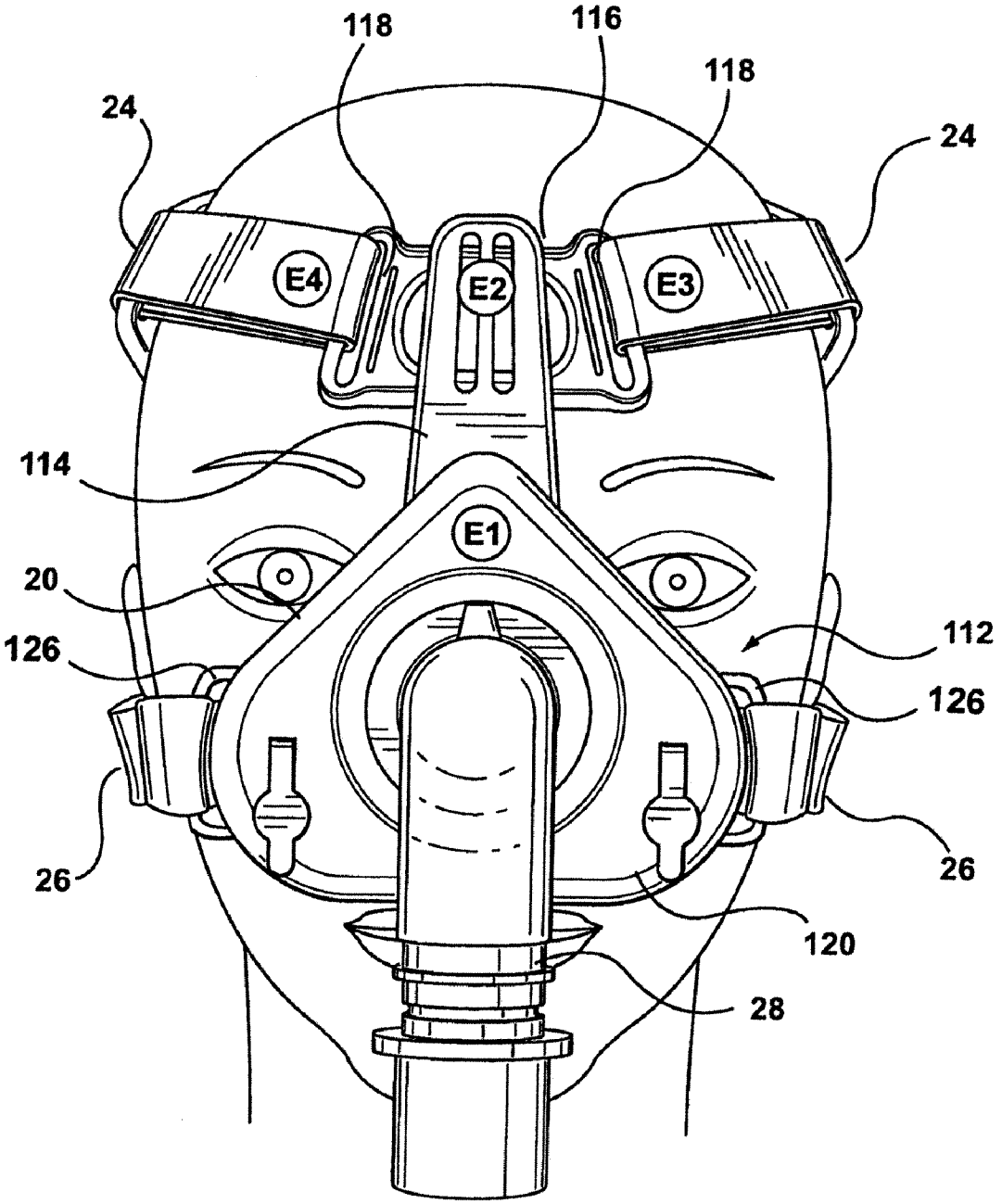

FIG. 2a

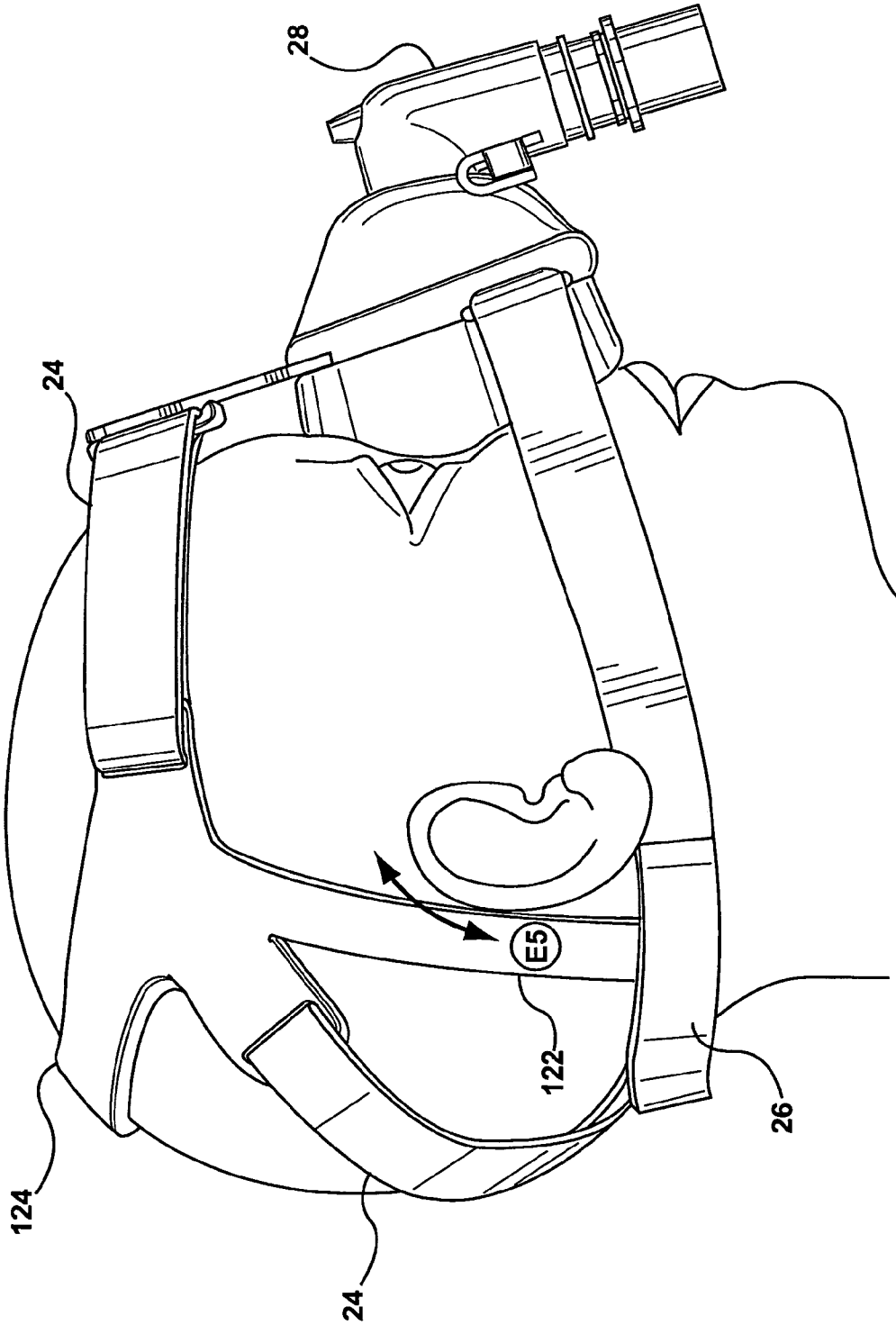

FIG. 2b

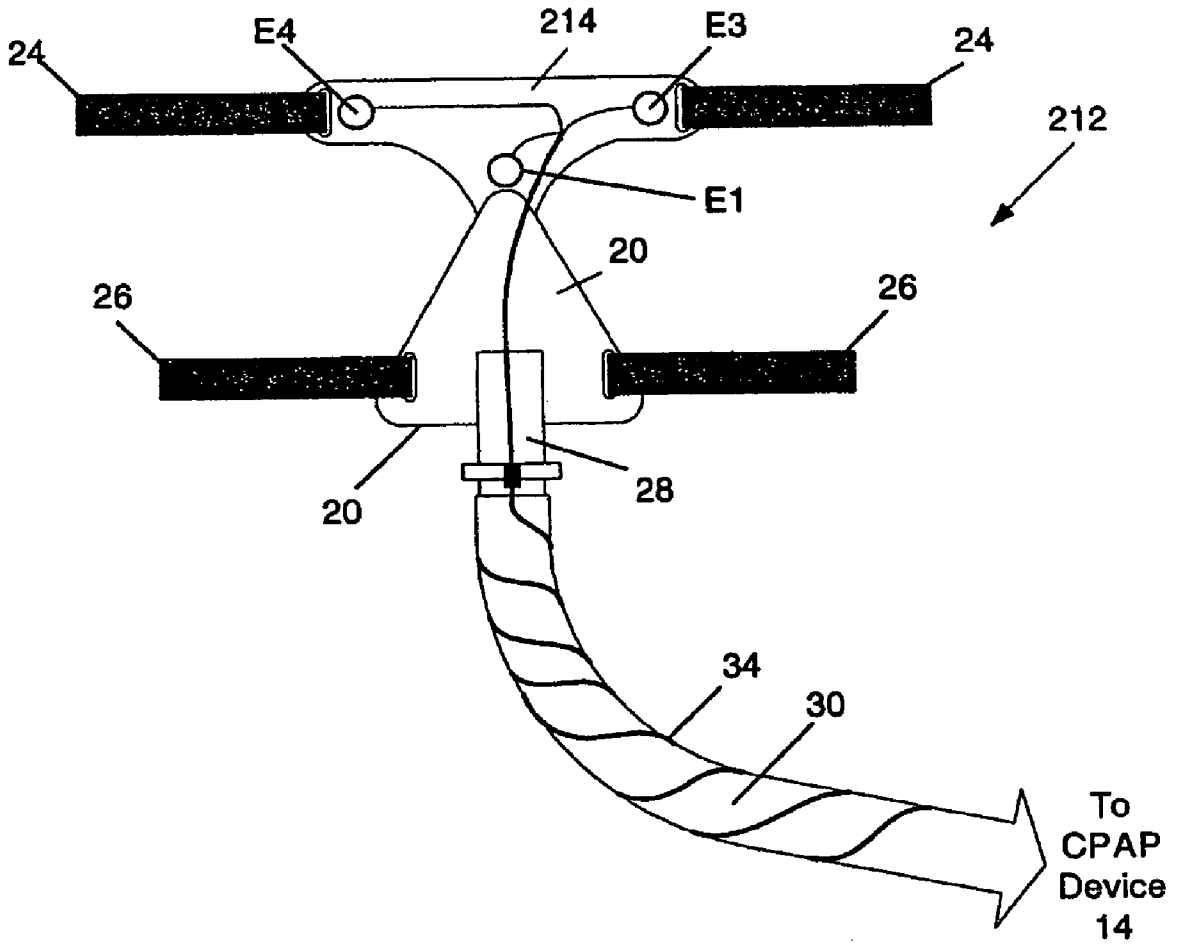

Figure 3

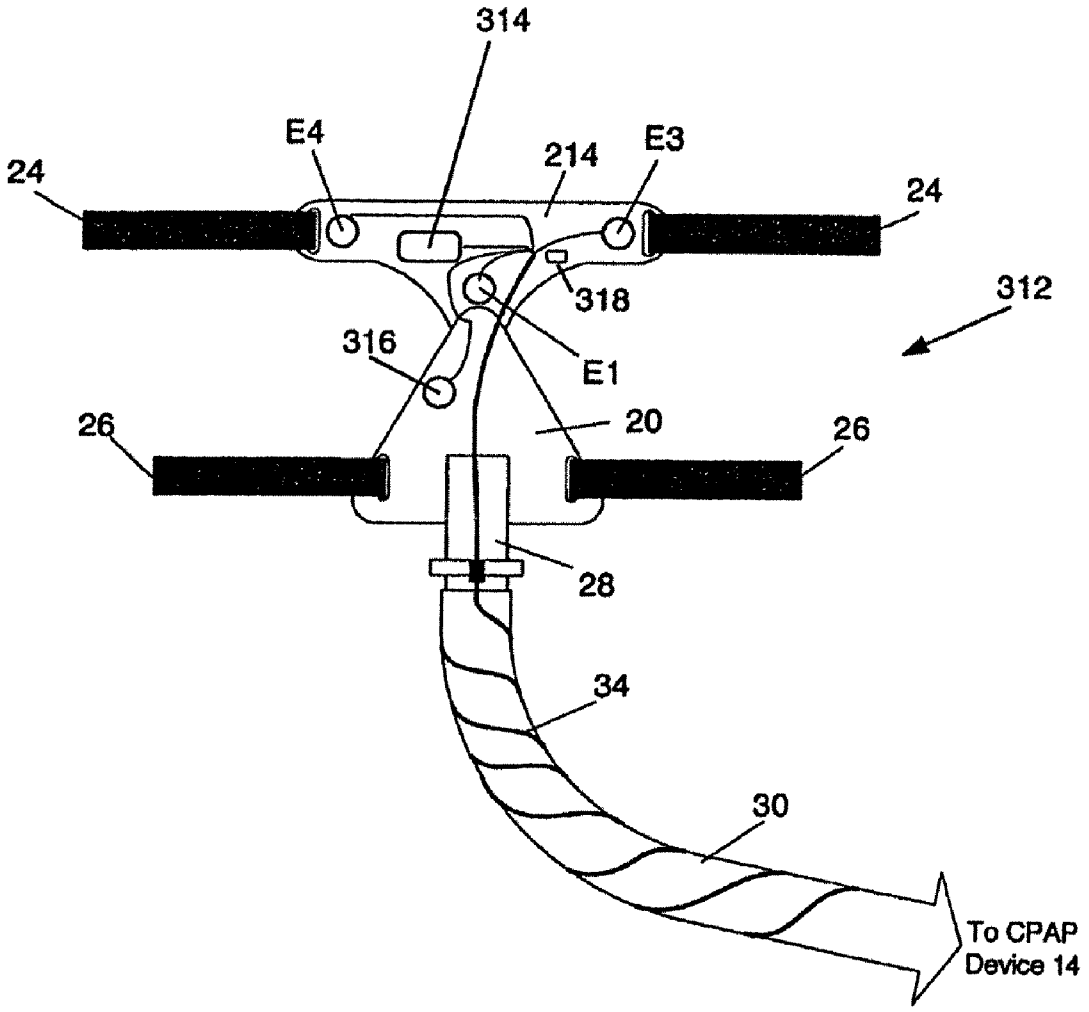
314
E4
214
E3
24
24
318
312
316
E1
26
20
26
28
34
30
To CPAP
Device 14

Figure 4

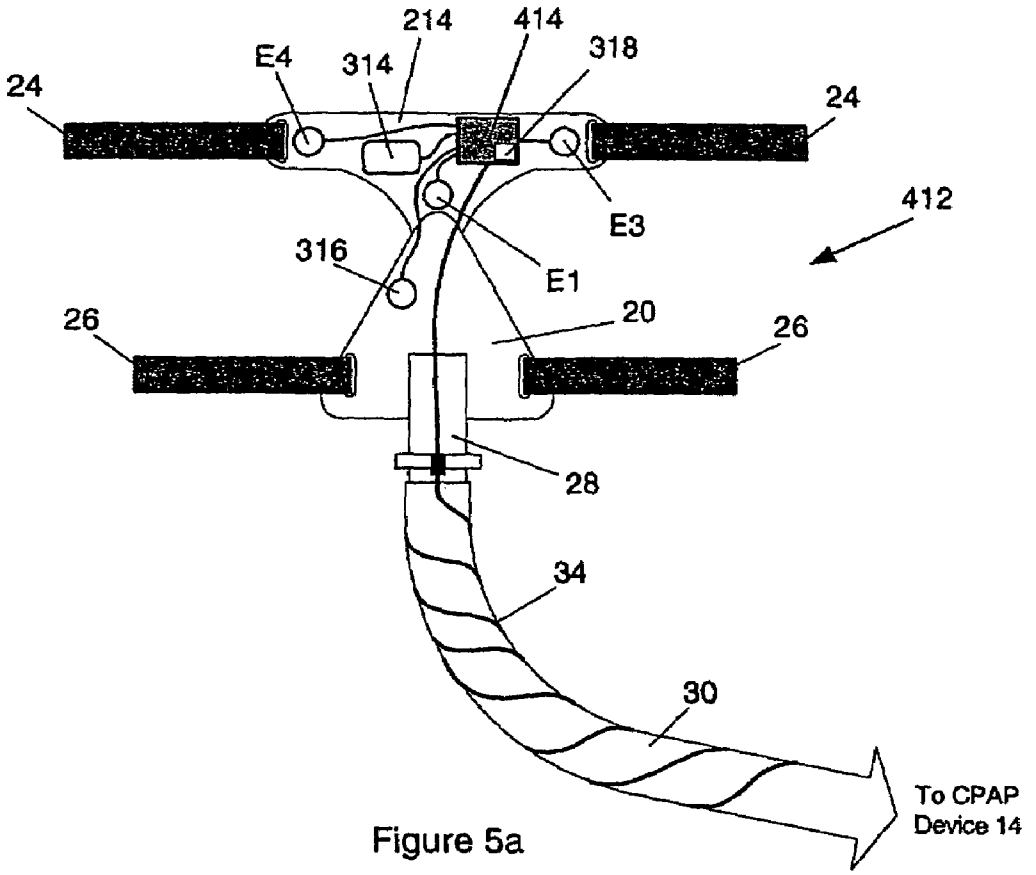

Figure 5a

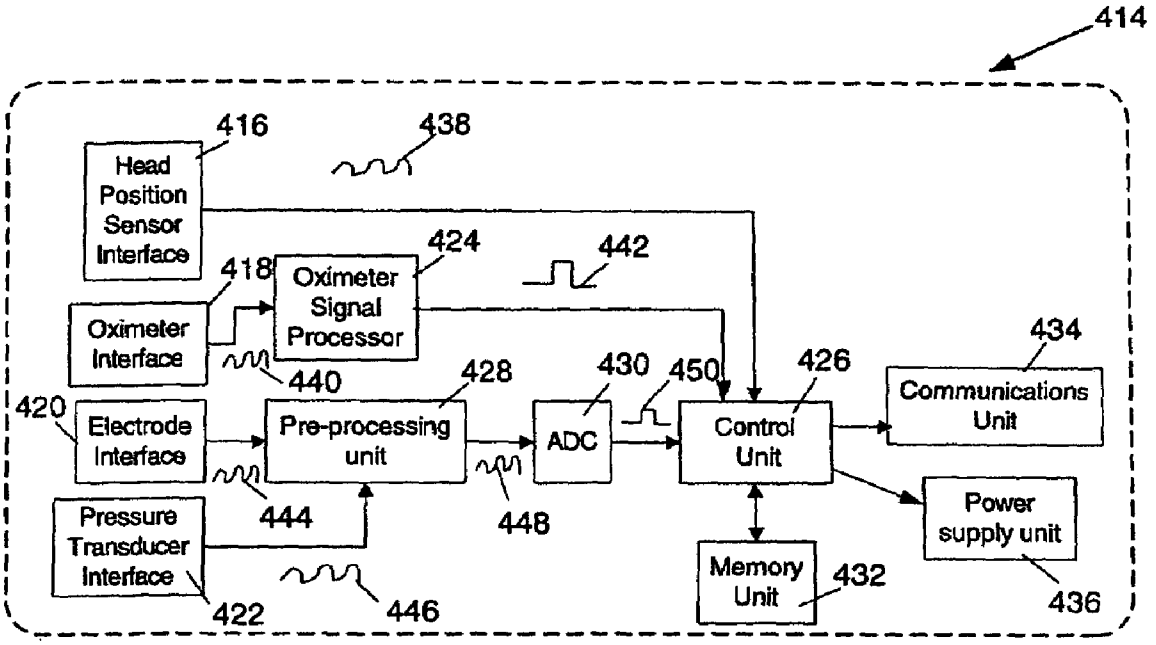

Figure 5b

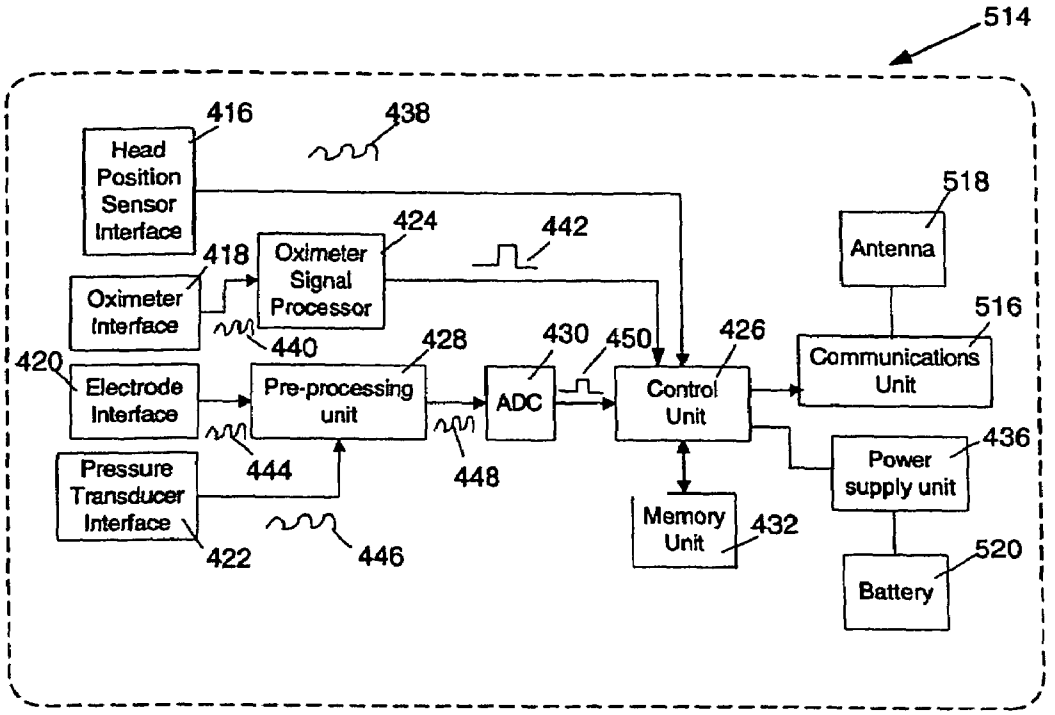

Figure 5c

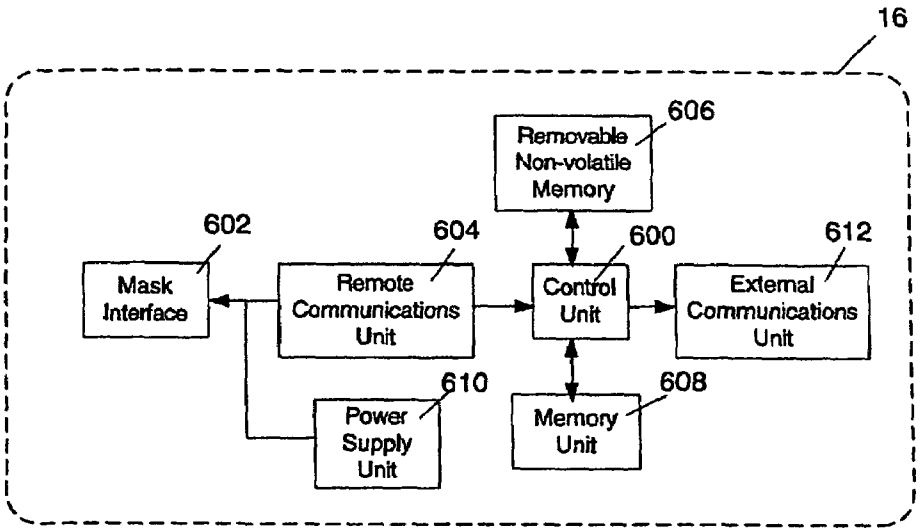

Figure 6

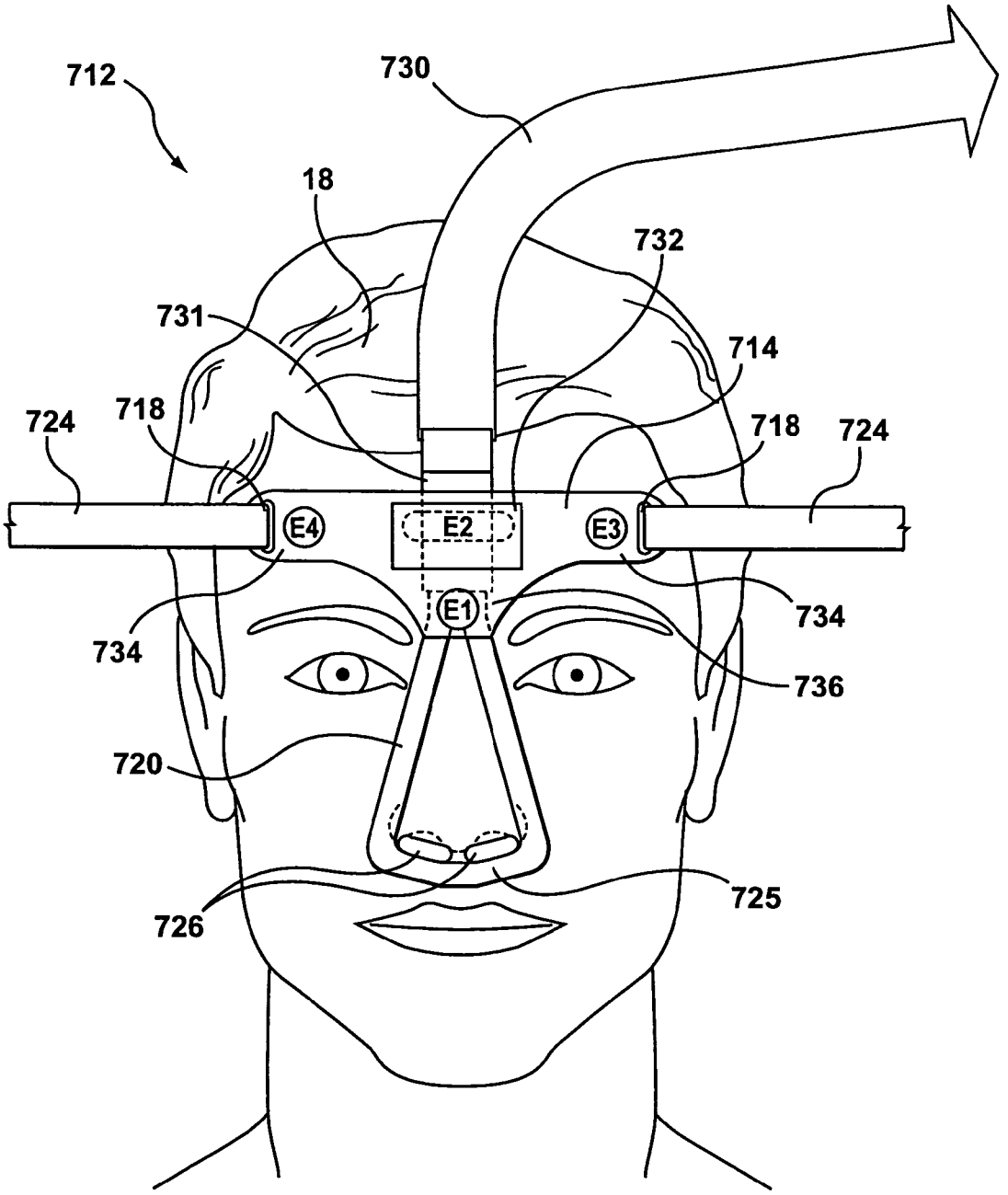
712
730
18
732
731
714
724
718
718
724
E4
E2
E3
E1
734
734
736
720
725
726

FIG. 7

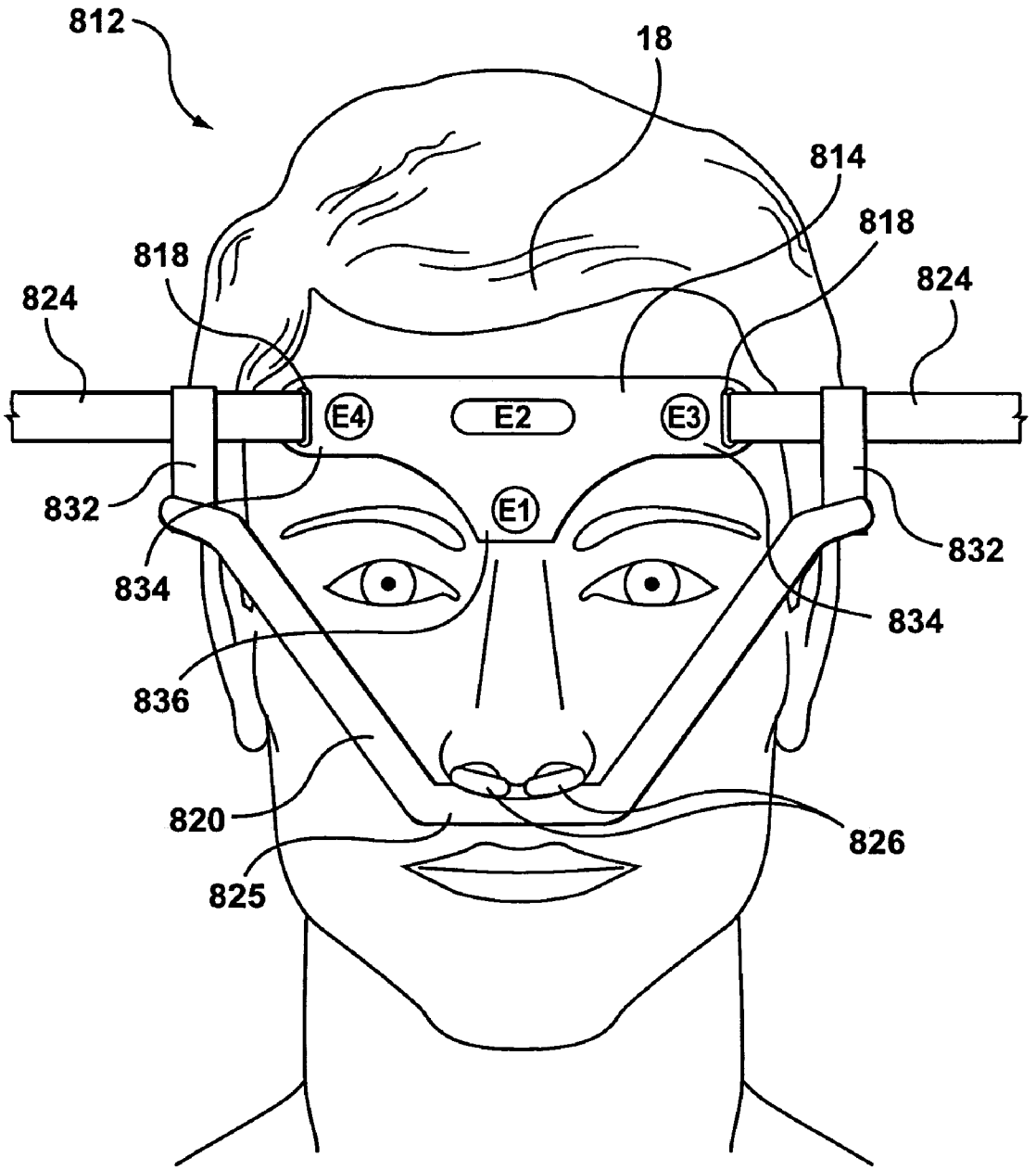
812
18
814
818
818
824
824
E4
E2
E3
E1
832
832
834
834
836
820
826
825

FIG. 8

MASK ASSEMBLY WITH INTEGRATED SENSORS

RELATED APPLICATIONS

This application claims the benefit of U.S. Provisional Patent Application Ser. No. 60/571,942, filed May 18, 2004, the entire contents of which is hereby incorporated by reference, U.S. Provisional Patent Application Ser. No. 60/571,890, filed on May 18, 2004, the entire contents of which is hereby incorporated by reference and U.S. Provisional Patent Application Ser. No. 60/571,942 filed on May 18, 2004, the entire contents of which are hereby incorporated by reference.

FIELD OF THE INVENTION

This invention relates to a mask assembly that is used for the detection of physiological information and the treatment of medical conditions. More particularly, this invention relates to a mask assembly with integrated sensors for sensing the efficacy of treatment of medical conditions.

BACKGROUND OF THE INVENTION

Obstructive Sleep Apnea (OSA) is a life-threatening condition characterized by frequent episodes in which an individual stops breathing or breathes less efficiently during sleep. OSA is caused by a blockage of the airway typically resulting from the collapse and closure of the soft tissue in the rear of the throat during sleep. With each apnea event, the brain arouses the individual in order for the individual to resume breathing, but consequently sleep is extremely fragmented and of poor quality.

According to the National Institute of Health, OSA currently affects more than twelve million Americans (4% of men and 2% of women), making this disorder as common as adult diabetes. Further, the disrupted and/or poor quality sleep that is associated with OSA may lead to serious health issues including hypertension, heart disease, diabetes, and stroke. Moreover, untreated sleep apnea may be responsible for job impairment and motor vehicle crashes. For example, the Department of Transport in the UK estimates that 20% of road accidents leading to death and serious injury are caused by drowsiness or sleep disorders.

When an individual is diagnosed with OSA, the individual may be prescribed a therapeutic regime involving the use of a Continuous Positive Airway Pressure (CPAP) device. The CPAP device works by delivering a steady flow of air through a soft, pliable mask worn over the individual's nose. The CPAP device essentially pressurizes the throat of the individual thereby preventing the collapse of the soft tissue and keeping the airways open and allowing the individual to breathe uninterrupted during sleep.

The CPAP device is both loud and uncomfortable and has met with various non-compliance issues. However, it is possible to augment the CPAP device to control gas delivery to the individual according to changes in the physiological state of the wearer. These changes can be seen in brainwave patterns, blood oxygen saturation and breathing patterns. One or more of the individual's EEG, EOG, EMG, position, breathing and blood oxygen levels can be monitored by a monitor unit associated with the CPAP device. In some instances, the monitoring unit may be part of the CPAP device. The EEG is used to observe brain activities during sleep. The EMG is used to observe muscle tone during sleep. The EOG is used to observe eye movement during sleep. The three physiological signals (i.e. EEG, EOG, and EMG) may be used together to score sleep stages.

Arousals due to upper airway resistance may be detected from a shift in frequency of the patient's EEG and/or EOG as well as a decrease in blood oxygen levels. The monitoring unit includes an algorithm that detects the arousals and sleep stages, and uses the physiological information to automatically adjust the delivered respiratory gas pressure to the CPAP device wearer based on the physiological information. The algorithm can also use the physiological information to determine the effectiveness of the treatment.

In order to measure the physiological information, various sensors are attached to the CPAP patient. For instance, to measure EEG, EOG and EMG, several electrodes may be applied to the patient's head and face. To measure blood oxygen level, a blood oximetry probe may be applied to the patient's finger or earlobe. To measure body position, an accelerometer-based sensor may be placed on the patient's chest. These sensors are connected to the monitoring unit with appropriate electrical wires. Once the sensors are applied, the CPAP device wearer puts on the mask assembly. The mask assembly includes a nasal mask (or a nasal/oral mask) and a harness that maintains the position of the nasal mask on the face of the wearer.

However, the application of electrodes by the CPAP device wearer is not an easy process; it is difficult, time consuming and prone to errors. The process involves preparing the site to reduce impedance, attaching one electrode at a time with tape and/or adhesives, and then individually wiring each electrode to the monitoring unit. In a clinical setting, the electrodes are typically positioned by a polysomnography technician according to standard positions, or as directed by a physician. In a non-clinical setting, such as at a patient's home, the patient or another untrained person may be required to position the electrodes on the patient. Such untrained persons may have difficulty placing the electrodes in the correct location or correctly wiring the electrode to the monitoring unit. Even in a clinical setting, a trained technician may position an electrode incorrectly.

Furthermore, once the electrodes and the other sensors are applied to the wearer and connected to the monitoring unit, the arrangement results in many wires emanating from different locations on the wearer to the monitoring unit. As a result, the arrangement is uncomfortable for the wearer and interferes with the wearer's natural movements, which makes it difficult for the wearer to sleep. Consequently, the wearer may find it difficult to find a comfortable sleep position. In addition, the wearer may move during sleep such that the sensors become disconnected from the monitoring unit. Also, motion of the wires connecting the electrodes to the monitoring unit introduces electrical artifacts that hides the underlying physiological information. These technical difficulties also prevent sleep studies from being conducted at a patient's home. Further, the unfamiliar environment in the sleep lab may dramatically affect the patient's sleep which in turn may lead to an inaccurate diagnosis.

It is desired to address or ameliorate one or more of the shortcomings, disadvantages or problems associated with prior systems or devices, or to at least provide a useful alternative thereto.

SUMMARY OF THE INVENTION

The invention relates to a mask assembly with integrated sensors for sensing the efficacy of treatment of medical con-

ditions, such as obstructive sleep apnea during treatment with continuous positive airway pressure.

In one aspect, the invention provides a mask assembly adapted to be worn by a wearer for treatment of a medical condition. The mask assembly comprises a mask shaped to fit over at least the nose of the person, the mask including a gas inlet for providing pressurized gas to the wearer; a harness assembly attached to the mask, the harness assembly including a plurality of straps for securing the mask assembly to the head of the wearer; and, sensors located on the mask assembly for providing physiological information about the person for determining efficacy of treatment and for varying operational parameters of the treatment, the sensors being located on at least one of the mask and the harness assembly.

In one embodiment, the sensors include electrodes. Preferably, the sensors include three electrodes arranged in a triangular configuration with at least a portion of the configuration being disposed on a forehead of the wearer.

In another embodiment, the mask includes a vertical mounting plate extending upwardly from the top of the mask and wherein a first electrode is located at the mask at the nasion of the person and a second electrode is located at the vertical mounting plate at the central forehead region of the person.

In another embodiment, the mask includes a vertical mounting plate extending upwardly from the top of the mask and a forehead support member attached horizontally therewith, the forehead support member having vertically elongated apertures at either end, and wherein the harness assembly includes right and left upper straps that engage the corresponding elongated aperture on the forehead support member, wherein a first electrode is located at the mask at the nasion of the person, a second electrode is located at the upper right strap horizontally offset with respect to the center of the right eye of the wearer, and a third electrode is located at the upper left strap horizontally offset with respect to the center of the left eye of the wearer.

In another embodiment, the mask includes a vertical mounting plate extending upwardly from the top of the mask and a forehead support member attached horizontally therewith, the forehead support member having vertically elongated apertures at either end, and wherein the harness assembly includes right and left upper straps that engage the corresponding elongated aperture on the forehead support member, right and left lower straps that engage elongated apertures at the bottom of the mask, a right vertical strap behind the right ear of the wearer that connects the right upper strap to the right lower strap and a left vertical strap behind the left ear of the wearer that connects the left upper strap to the left lower strap, the right and left vertical straps located proximally to the right and left mastoids of the wearer, wherein a first electrode is located at the upper right strap horizontally offset with respect to the center of the right eye of the wearer, a second electrode is located at the upper left strap horizontally offset with respect to the center of the left eye of the wearer, and a third electrode is located at one of the right and left vertical straps proximally to the corresponding mastoid of the wearer.

In another embodiment, the mask includes a vertical mounting plate extending upwardly from the top of the mask and a forehead support member attached horizontally therewith, the forehead support member having vertically elongated apertures at either end, and wherein the harness assembly includes right and left upper straps that engage the corresponding elongated aperture on the forehead support member, right and left lower straps that engage elongated apertures at either side near the bottom of the mask, a right vertical strap behind the right ear of the wearer that connects the right upper strap to the right lower strap and a left vertical strap behind the left ear of the wearer that connects the let upper strap to the left lower strap, the right and left vertical straps located proximally to the right and left mastoids of the wearer, wherein a first electrode is located at the vertical mounting plate at the central forehead region of the wearer and a second electrode is located at one of the right and left vertical straps proximally to the corresponding mastoid of the wearer.

In a further embodiment, the mask includes a forehead support member extending vertically from the top of the mask, the forehead support member having right and left horizontal ends that extends above the eyebrows of the wearer, wherein a first electrode is located at the mask at the nasion of the wearer, a second electrode is located at the right horizontal end of the forehead support member above the right eyebrow of the wearer and horizontally offset with respect to the center of the right eye of the wearer, and a third electrode is located at the left horizontal end of the forehead support member above the left eyebrow of the wearer and horizontally offset with respect to the center of the left eye of the wearer.

In another embodiment, the sensors further include a blood oximeter sensor. The blood oximeter sensor may be located at the forehead support member in close proximity to the forehead of the wearer. The sensors may further include a pressure transducer sensor disposed within the mask.

In another embodiment, the sensors further include a position sensor. Preferably, the mask includes a forehead support member extending vertically therefrom, the position sensor being located at the forehead support member. Preferably, the sensors further include at least two of a blood oximeter sensor, a pressure transducer and a position sensor.

In another embodiment, the mask assembly further includes a remote processing unit connected to the sensors for processing the physiological information. The remote processing unit may include a sleep efficacy algorithm for processing the physiological information and generating a sleep information profile for the wearer. Preferably, the remote processing unit includes a wireless transceiver for wirelessly transmitting signals related to the physiological information, and a battery for providing power to the remote processing unit.

In another aspect, the invention relates to a mask assembly adapted to be worn by a wearer for treatment of a medical condition. The mask assembly comprises a mask shaped to fit over at least the nose of the person, the mask including a gas inlet for providing pressurized gas to the wearer; a harness assembly attached to the mask, the harness assembly including a plurality of straps for securing the mask assembly to the head of the wearer; and, at least two electrodes located on the inside of the mask assembly and being spaced with regards to one another for sensing physiological information including at least one of the EEG, EMG and EOG of the wearer whereby the physiological information is used to monitor the efficacy of treatment or to vary operational parameters of the treatment, the at least two electrodes being located on at least one of the mask and the harness assembly.

In yet another aspect, the invention relates to a mask assembly adapted to be worn by a wearer for treatment of a medical condition, the mask assembly including sensors located on the mask assembly for sensing physiological information from the wearer and a remote processing unit located on the mask assembly and connected to the sensors for processing the physiological information.

In a further aspect, the invention relates to a mask assembly for wearing by a wearer for treatment of a medical condition. The mask assembly comprises a nasal interface for providing pressurized gas to the wearer, the nasal interface comprising a gas inlet for receiving a source of gas and a gas outlet for providing gas directly to the nares of the wearer. The mask assembly further comprises at least one strap or other harness means connected to the nasal interface for securing the mask assembly to the head of the wearer. The mask assembly also has sensors located on the mask assembly for measuring physiological signals of the wearer during treatment of the medical condition to determine efficacy of the treatment and to vary operational parameters of the treatment. The sensors are located on at least one of the strap or forehead member of the mask assembly.

The forehead member preferably comprises at least two electrodes disposed so as to contact the skin of the forehead of the wearer of the mask assembly during treatment so that the electrodes can pick up the physiological signals. Such physiological signals may be electromyography (EMG), electroencephalography (EEG) or eletroocularography (EOG) signals.

Preferably, the nasal interface comprises a gas supply tube in fluid communication with the gas source and passing between the mouth and the nose of the wearer. The nasal interface comprises two neris feed portions for feeding gas into the nostrils of the wearer and substantially occluding the nostrils against airflow other than through the nasal interface.

In a still further aspect, the invention relates to an electrode placement assembly for locating electrodes on the forehead of a wearer of the electrode placement assembly. The electrode placement assembly comprises a forehead placement assembly, at least one strap and at least two electrodes. The forehead placement assembly is dimensioned to extend laterally across a forehead of the wearer and has a lower portion for at least partly overlying a nasion area of the wearer. The at least one strap is connected to the forehead placement assembly for securing the electrode placement assembly to the wearer. The at least two electrodes are positioned on at least one of the forehead placement assembly and the at least one strap so that the at least two electrodes contact the skin of the wearer.

The electrode placement assembly preferably comprises attachment means for attaching a nasal interface to the electrode placement assembly so that the nasal interface is positioned to provide gas to the neres of the wearer. The attachment means may comprise flexible attachment members for attaching the nasal interface to the at least one strap. Alternatively, the attachment means may comprise a connector member positioned on the forehead placement assembly for connecting the nasal interface to the forehead placement assembly.

In one embodiment, the forehead placement assembly may be formed of a unitary flexible plate. Alternatively, the forehead placement assembly may be comprised of separate interconnected members. Preferably, one of the at least two electrodes is positioned on the lower portion of the forehead placement assembly for at least partly overlying the nasion area. Another of the at least two electrodes may be positioned on the forehead placement assembly away from the one electrode for overlying an area of the forehead vertically displaced from the nasion area. This other electrode may be positioned centrally above the forehead or on either lateral side above, or extending laterally of, the pupils of the wearer.

In one particular embodiment, the electrode placement assembly comprises four electrodes. Three of these electrodes are located on the forehead placement assembly for positioning laterally across the forehead of the wearer. A fourth electrode is located on the lower portion of the forehead placement for at least partly overlying the nasion area.

Advantageously, the electrode placement assembly can be used with different nasal interfaces, according to the particular nasal interface design preferred by the wearer. For example, some wearers may prefer a mask which covers the entire nose while other wearers may prefer less obtrusive tubing to lie across the upper lip and beneath the nose and having gas outlets feeding directly into the neres of the wearer.

BRIEF DESCRIPTION OF THE DRAWINGS

For a better understanding of the invention and to show more clearly how it may be carried into effect, reference will now be made, by way of example only, to the accompanying drawings which show exemplary embodiments of the invention and in which:

FIG. **1** is a general block diagram of a CPAP system including a mask assembly with integrated sensors in accordance with an embodiment of the invention;

FIG. **2***a* is a front view of a mask assembly with integrated sensors in accordance with another embodiment of the invention;

FIG. **2***b* is a side view of the mask assembly of FIG. **2***a;*

FIG. **3** is a front view of mask assembly with integrated sensors according to an alternate embodiment;

FIG. **4** is a front view of a mask assembly with integrated sensors according to another embodiment;

FIG. **5***a* is a front view of a mask assembly with integrated sensors and a remote processing unit according to another embodiment;

FIG. **5***b* is a block diagram of the remote processing unit of FIG. **5***a;*

FIG. **5***c* is a block diagram of the remote processing unit incorporating a wireless communication according to another embodiment;

FIG. **6** is a block diagram of the monitoring unit of FIG. **1** in accordance with another embodiment.

FIG. **7** is a front view of a mask assembly according to another embodiment; and

FIG. **8** is a front view of another mask assembly according to yet another embodiment.

DETAILED DESCRIPTION OF EMBODIMENTS OF THE INVENTION

It will be appreciated that for simplicity and clarity of illustration, elements shown in the figures have not necessarily been drawn to scale. For example, the dimensions of some of the elements may be exaggerated relative to other elements for clarity. Further, where considered appropriate, reference numerals may be repeated among the figures to indicate corresponding or analogous elements. In addition, numerous specific details are set forth in order to provide a thorough understanding of the invention. However, it will be understood by those of ordinary skill in the art that the invention may be practiced without these specific details. In other instances, well-known methods, procedures and components have not been described in detail so as not to obscure the invention.

Referring now to FIG. **1**, shown therein is a block diagram of a CPAP system **10** including a mask assembly **12** and a CPAP device **14** with an associated monitoring unit **16** for use by a CPAP device wearer **18**. The monitoring unit **16** is shown as being an integral part of the CPAP device **14**. Other con-

figurations are possible in which the monitoring unit **16** is separate from the CPAP device **14**. The mask assembly **12** includes a nasal interface or mask **20** and a harness **22**. Harness **22** includes upper straps **24** and lower straps **26**. The mask assembly **12** also includes a gas inlet **28** for receiving air, or another suitable gas such as pure oxygen, from the CPAP device **14** via a hose **30**. The nasal mask **20** can be made from polystyrene or some other suitable material. The nasal mask **20** may also incorporate a cushion for providing a comfortable and tight fit with the face of the wearer **18**.

Nasal mask **20** is one form of nasal interface that can be used with embodiments of the invention. Other forms of nasal interface are shown and described in relation to FIGS. **7** and **8**.

In other embodiments, the harness may include one strap or more than two straps. Further, although the mask assembly **12** is shown having the nasal mask **20**, it should be understood that the invention is also applicable to mask assemblies having a nasal/oral mask which covers both the nose and mouth of the CPAP wearer ("user"). Accordingly, the use of the word mask herein refers to both nasal masks and nasal/oral masks. The mask assembly **12** further includes sensors (e.g. electrodes E**1**, E**2**, E**3**, E**4** and E**5** of FIGS. **2***a* and **2***b*) positioned on the nasal mask **12**, the straps **24** and **26** of the harness **22** or on both the nasal mask **12** and the straps **24** and **26**. In this exemplary embodiment, the sensors are connected to the monitoring unit **16** via a cable **34**. However, the sensors may also be wirelessly coupled to the monitoring unit **16**. The sensors include electrodes for detecting one or more of the EEG, EMG or EOG of the CPAP wearer **18**. The sensors may further include at least one of a blood oximetry sensor, a body position sensor and a pressure sensor as is described in further detail below.

The physiological information provided by the sensors is preprocessed by the monitoring unit **16** to improve signal quality and then processed according to a sleep efficacy algorithm **36**. The sleep efficacy algorithm **36** monitors the quality of sleep for the wearer **18**. This can include determining how long the wearer **18** is in a given sleep state, how many different sleep states the wearer **18** has experienced during sleep, the fragmentation of their sleep states and how many arousals the wearer **18** has experienced. Accordingly, the sleep efficacy control algorithm **36** can generate sleep profile information for the wearer **18** (the sleep profile information may include data, such as a test score, related to efficacy and compliance). The sleep efficacy algorithm **36** further generates a control signal to control the operational parameters of the CPAP device **14** such as activating or deactivating the CPAP device **14** or altering the amount of pressure that is provided to the gas inlet **28** to improve the quality of sleep of the wearer **18**. The sleep efficacy algorithm **36** may use standard techniques, as is commonly known to those skilled in the art, to process the physiological signals, determine the quality of sleep and generate the control signal. The sleep efficacy algorithm **36** may identify sleep stages and generate the sleep profile information based on the physiological information sensed from the wearer **18**.

The sensors are integrated directly on the inner surface of the mask assembly **12** rather than being separately attached as is done with conventional CPAP devices. Since the sensors are integrated into the mask assembly **12**, the sensors do not have to be separately attached by the wearer **18**. This ensures that the sensors are repeatedly applied to the same location on the wearer's face and head every time the wearer **18** wears the mask assembly **12**. In addition, the mask assembly **12** can be positioned by the wearer **18**, along with the sensors, without the aid of a medical professional. Furthermore, since the sensors are already in place, the preparation time prior to going to sleep is reduced for the wearer **18**.

The wiring associated with the sensors is integrated into a cable **34** that runs along the length of the hose **30**. The cable **34** may run along the inside or outside of the hose **30**. In one embodiment, the cable **34** runs along the inside of the hose **30**. In another embodiment, the cable **34** is wound around the outside of the hose **30**, as illustrated in FIG. **1**. In both instances, the wiring is constricted to the mask assembly **12** instead of hanging loosely on the body of the wearer **18** as is done with conventional CPAP devices. Further, the cable is shielded to reduce the possibility of receiving electromagnetic interference. Connectors **38** and **40** are also provided at either end of the hose **30** so that the hose **30** can be disconnected from the mask assembly **12** and the CPAP device **14** when the mask assembly **12** or the hose **30** requires replacement. This wiring arrangement of the invention provides the wearer **18** with increased mobility and less discomfort. Accordingly, the wearer **18** will enjoy a better quality of sleep. The mask assembly **12** with the integrated sensors is also easy to use and the sensors are automatically engaged when the wearer **18** puts on the mask assembly **12**.

In the present embodiment, the electrodes that are used as sensors are preferably removably attachable to the mask assembly **12** and configured for placement against the skin of the wearer **18** for sensing the physiological signals. Accordingly, the mask assembly **12** includes attachment means (not shown) for holding the electrodes in place and providing an electrical connection with the cable **34**. The implementation of the attachment means depends on the particular type of electrode that is used. For one type of electrode, the attachment means may be circular apertures, or a cutout portion, with an inner metallic contact, which may be a metallic ring. The apertures are sized to receive cylindrical electrodes which have a plastic portion, a solid conductive gel portion and a metallic conductor disposed there between. The plastic portion is placed in the aperture so that the conductive gel portion is placed against the skin of the wearer **18** when the mask assembly **12** is worn. One example of such an electrode is the Hydrodot™ biosensor, available from Physiometrix Inc. of N. Billerica, Mass., USA. These electrodes are preferable in that the electrodes require minimal preparation of the skin of the CPAP wearer **18** and the electrodes can be used for several nights before having to be replaced.

Many other types of electrodes may also be used. For instance, metal electrodes can be used which are directly integrated into the mask assembly **12** and do not have to be replaced. In this instance, the wearer **18** may be required to apply a conductive gel to each metallic electrode prior to use. The metallic electrodes may be permanently attached to the mask assembly **12** and would require cleaning each night to remove the old conductive paste before new paste is applied. Saline electrodes may also be used. Saline electrodes have a reservoir that contains saline. Over the course of the night, the reservoir empties. Accordingly, the CPAP wearer **18** must refill the reservoir prior to use of the mask assembly **12**. Disk electrodes that are made from gold, silver or carbon may also be used. In addition, peel and stick electrodes that have a layer of silver-silver chloride may also be used. The peel and stick electrodes are likely to need replacement each night. One side of a peel and stick electrode has silver-silver chloride for attachment to the skin, and the other side has a conductive metallic surface. The peel and stick electrode may be held in place by a fastener that ensures that the metallic backing makes electrical contact with a corresponding wire in the mask assembly **12**.

It should be noted that the type of electrodes used as the sensors does not limit the invention. Further, it should be understood that regardless of the electrodes used for the sensors, it may still be beneficial for the wearer **18** to prepare the skin locations which will receive the electrodes when the wearer **18** wears the mask assembly **12**. Accordingly, the wearer **18** may cleanse and slightly abrade their skin with an appropriate cleanser such as NuPrep™ cleanser, available from Weaver & Co. of Aurora GO, USA. In some instances, the wearer **18** may also apply a conductive paste, such as EC2™ cream for example, to lower the impedance of their skin in order to obtain better physiological signals. EC2™ cream is available from Astro-Med Inc. of West Warwick, R.I., USA. The harness **22** of the mask assembly **12** may be adjusted to apply sufficient pressure to ensure that the electrodes make a good physical contact with the wearer **18**.

The electrodes are preferably located at predetermined locations on the face and head of the wearer **18** in order to obtain good signal quality and different types of physiological data with a minimal number of electrodes. Due to the fewer number of electrodes, the mask assembly **12** is easier and more comfortable to wear. The inventors have been able to obtain good physiological data from as little as two electrodes which can provide EEG, EOG or EMG data. This is in contrast to standard sleep staging systems which make use of up to eleven surface electrodes located on the ears, central and occipital lobes, and besides the eyes and on the chin of the wearer. In one embodiment, the inventors have found that one set of preferred locations for the electrodes are on the nasion and approximately 4 cm higher on the forehead just above FpZ. The physiological signals obtained from the forehead at these locations provide data related to the CPAP wearer's brainwaves, facial muscle tone and eye movements. Another preferred combination includes three electrodes in which one electrode is located at the nasion, another electrode is located just above and to the left of Fp1 and another electrode is located just above and to the right of Fp2. However, other locations, and other combinations of electrodes, may also be suitable as described below.

Referring now to FIGS. **2***a* and **2***b*, shown therein are front and side views, respectively, of an embodiment of the mask assembly **112** with integrated sensors in accordance with this embodiment of the invention. The nasal mask **20** of the mask assembly **112** includes a vertical mounting plate **114** that is connected to a forehead support member **116**. The forehead support member **116** has two elongated apertures **118** for receiving the straps **24**. The mask assembly **112** also includes a flexible seal **120** that rests against the face of the CPAP wearer **18**. The seal **120** can be made from an elastomer, urethane foam, rubber or other suitable material and is glued or press fit against the rear of the nasal mask **20**. The harness assembly **22** includes vertical straps **122**, on either side of the head of the wearer **18**, which connect the upper and lower straps **24** and **26** just behind the ear of the wearer **18**. The harness assembly **22** also includes a crown strap **124** that crosses over the crown or vertex of the wearer **18** to connect the upper straps **24** to one another. There are also two elongated apertures **126** disposed at either side near the bottom of the nasal mask **20**. The elongated apertures **126** are engaged by the lower straps **26** of the harness assembly **22**.

In this embodiment, exemplary locations are shown for electrodes E**1**, E**2**, E**3**, E**4** and E**5**. Electrodes E**1** and E**2** are located on the nasal mask **20** and the vertical mounting plate **114** that correspond to the nasion and central forehead regions, respectively, of the CPAP wearer **18**. Electrodes E**3** and E**4** are located on the right and left upper straps **24**. Electrode E**5** is located on the mastoid of the CPAP wearer **18**. The electrode E**5** may be placed anywhere behind the right or left ear of the wearer **18**. The wires from the electrodes E**1**, E**2**, E**3**, E**4** and E**5** are not shown. However, it should be understood that separate wires from each electrode E**1**, E**2**, E**3**, E**4** and E**5** are bundled together into the cable **34** and run along the hose **30** of the CPAP system **10** as described above.

The electrode E**1** is located at, or approximately 1 cm above, the nasion, which is the depression at the root of the nose of the wearer **18**, and is roughly between the eyebrows of the wearer **18**. The electrodes E**3** and E**4** are located just below the hairline and spaced apart lining up between the centerline and the outside of the eyes of the wearer **18**. The horizontal and vertical displacements of electrodes E**3** and E**4** are important for detecting certain EEG information as described below. For instance, if the electrodes E**3** and E**4** are too close together, then they will not be able to distinguish signals that originate from the deeper structures of the brain. The electrode E**5** on the mastoid can help to detect alpha waves in the EEG of the wearer **18** since the electrode E**5** is close to the occipital region of the wearer **18**. Physiological information from the electrode E**5** may be necessary if sufficient information cannot be detected from the frontal electrodes (this depends on the quality of sleep staging performed by the efficacy monitoring algorithm **36**).

Electrode locations other than those shown for electrodes E**1**, E**2**, E**3**, E**4** and E**5** are also possible. For instance it is possible to place one electrode below and beside one eye of the CPAP wearer **18** and the other electrode above and beside the other eye of the CPAP wearer **18**. This is the traditional location of EOG electrodes which maximally detect horizontal and vertical eye movements. In addition, it may be possible to vertically flip the location of the electrode E**1** with respect to the electrodes E**3** and E**4**. Therefore, rather than forming an upside triangle pattern, as shown in FIG. **2***a*, the electrodes E**1** E**3** and E**4** can be oriented in a right side up triangle pattern. This may involve elongating the vertical mounting plate **114**.

It is to be noted that each of these electrode locations are on exposed skin surfaces (i.e. not on top of hair) in order to provide a good skin-electrode contact as well as to provide minimal discomfort to the wearer **18**. Further, the electrodes are preferably not placed on any large muscles to prevent having the physiological data contaminated with undesirable muscular artifacts. Further, the degree to which the locations of the electrodes E**1**, E**2**, E**3**, E**4** and E**5** can vary depends on the nature of the efficacy monitoring algorithm **36**. Small changes on the order of +/−1 cm have little effect. However, it is important to maintain a certain amount of vertical displacement between electrode E**1** and the other frontal electrodes E**2**, E**3** and E**4**. A vertical displacement of as much as 6 cm may be used.

Various subsets of the electrodes may be used in particular embodiments of the invention. One combination may be electrodes E**1** and E**2**. Another combination may be electrodes E**1**, E**3** and E**4**. Another combination may be electrodes E**3**, E**4** and E**5**. Another combination may be electrodes E**2** and E**5**. In each of these combinations, there is no reference electrode since one of the electrodes is used to provide both ground and reference signals. This results in a sight reduction in signal quality but the benefit is a reduced number of electrodes. Alternatively, it may be possible to use one of the electrodes as a ground electrode and another of the electrodes as a reference electrode, if necessary. For example, in one combination, electrode E**2** may be used to provide a ground signal and electrode E**1** may be used to provide the reference signal.

A single channel of physiological information can be derived from two frontal electrodes. However, there is a

reduction in the amount of physiological information that is available to determine the sleep stages when only a single channel is used. For instance, with a single channel, detection of eye movements is limited, and EMG information is weak. Also standard EEG features such as sawtooth waveforms, spindles, K-complex, alpha and delta waveforms may be changed. Furthermore, it is difficult to resolve K-complex signals and spindles from one another using only the electrodes E**4** and E**3**. These signals are more difficult to detect because they do not originate in the frontal lobes of the brain. However, they are useful since they can be used to differentiate between some of the sleep stages. Accordingly, it is preferable, and more robust, although not necessary, to use a subset of electrodes that contains at least three electrodes. However, in some cases it may be possible to use only two electrodes.

The combination of electrodes E**1**, E**3** and E**4** provides three channels of physiological data which have a sufficient content of EEG, EMG and EOG information to perform frontal sleep staging (the term "front" is used since the physiological data is obtained from the front/face of the wearer **18**). One of the three channels is obtained from electrode pair E**3** and E**1**, another of the other channels is obtained from electrode pair E**4** and E**1** and another of the channels is obtained from electrode pair E**3** and E**4**. The data provided by electrode pairs E**3** and E**1**, and E**4** and E**1** may be used to detect EEG and EOG signals while the data provided by electrode pair E**3** and E**4** may be used to detect EMG signals. Accordingly, the electrode configuration of electrodes E**1**, E**3** and E**4** may be used to detect both horizontal and vertically oriented potentials which is desirable for detecting horizontal and vertical eye movements. Also, dipoles in the brain generate EEG spindles that have different orientations. These EEG spindles, which are helpful for sleep staging, can be detected with electrodes that detect horizontal and vertically oriented potentials. Two channels are also better than a single channel in distinguishing eye blinks from other EEG waveforms such as K-complex delta activity that is usually less symmetric. With this electrode configuration, eye blinks and rapid eye movements can be used to assist in the detection of wake and REM states since alpha frequencies, which also indicate sleep arousal, originate in the occipital lobe at the rear of the head of the wearer **18** and this is difficult to detect with frontal electrodes. Arousals are also determined by an abrupt increase in alpha and beta band activity of the EEG signals which is evident on the frontal channels. Arousals are important for determining the quality of sleep and the efficacy of therapy.

Referring now to FIG. **3**, shown therein is a front view of an alternate embodiment of a mask assembly **212** with integrated sensors in accordance with the invention. In this embodiment, the nasal mask **20** includes a contoured forehead support member **214** with horizontal sides that extend over the eyebrows of the wearer **18**. The electrodes E**1**, E**4** and E**3** are all integrated onto the forehead support member **214** of the nasal mask **20** rather than the left and right straps **24**. In particular, the electrode E**1** is preferably located at the nasion of the wearer **18**, the electrode E**3** is located near the right horizontal end of the forehead support member **214** horizontally offset with respect to the center of the right eye of the wearer **18**, and the electrode E**4** is located near the left horizontal end of the forehead support member **214** horizontally offset with respect to the center of the left eye of the wearer **18**. Electrodes E**3** and E**4** preferably rest just below the hairline of the wearer **18**.

Referring now to FIG. **4**, shown therein is a front view of another alternate embodiment of a mask assembly **312** with additional integrated sensors in accordance with the invention. The mask assembly **312** includes an oximeter sensor **314**, a pressure transducer **316** and a position sensor **318**. It should be noted that not all three additional sensors **314**, **316** and **318** are needed and that additional embodiments are possible in which various subsets of these additional sensors are integrated into the mask assembly **312**. The oximeter sensor **314** is preferably located at the forehead support member **214** in close proximity with the forehead of the wearer **18**. Alternatively, the oximeter sensor **314** may be located on an ear clip or inserted into the ear canal and a wire run from the oximeter sensor **314** along one of the straps **24** or **26** and along the nasal mask **20** at which point the wire is integrated within the cable **34**. The pressure transducer **316** is disposed within the nasal mask **20** preferably in close proximity to the gas inlet **28**. The position sensor **318** is also preferably located on the forehead support member **214**. However, the position sensor **318** may be located within the nasal mask **20**; no contact with the skin is required and so the location of the position sensor **318** may be whatever is best suits the ergonomics and manufacturability of the mask assembly **12**.

The oximeter sensor **314** may be used to help detect sleep apnea since it provides physiological information from which desaturation and resaturation events in oxygen saturation of the arterial blood of the wearer **18** can be identified. During sleep apnea, there is no air movement into the chest of the wearer **18** and the wearer **18** becomes progressively more hypoxic and hypercarbic. Consequently, OSA may be detected by looking at the rate of change of oxygen desaturations measured during sleep. The oximeter sensor **314** includes light emitting diodes that emit near infrared light at the forehead skin of the wearer **18**. The light gets scattered and a portion of the light is reflected to the oximeter sensor **314**. The amount of light that gets reflected is related to the spectral absorption of the underlying tissue from which the average oxygenation of the tissue can be derived. Conventional forehead reflectance oximeters may be used, such as the one by Masimo of Irving, Calif., USA to measure peripheral blood oxygenation. Also, the INVOS™ cerebral oximeter made by Somanetics of Troy, Mich., USA may be used as the oximeter sensor **314** to measure oxygenation of the brain.

The pressure transducer **316** is used to detect the pressure within the cavity of the nasal mask **20** from which the breathing rate of the wearer **18** can be derived. The breathing rate of the wearer **18** can provide an indication of apnea and hypopnea events. Any suitable pressure transducer with an appropriate size may be used.

The position sensor **318** is used to detect the position of the head of the CPAP wearer **18**. This is important since the occlusion that occurs during sleep apnea happens mainly when the wearer **18** is lying on their back since the soft tissue in the back of the throat collapsing due to gravity. In addition, when the wearer **18** is in the supine position, more effort is required to breathe and consequently additional pressure from the CPAP device **14** is needed. The position of the head relates closely to that of the throat. Accordingly, locating the position sensor **318** on the mask assembly **12** is advantageous. In an alternative, it may be possible to locate a position sensor on the chest of the wearer **18** and run the corresponding wire up to the mask assembly **12** where it is integrated into the cable **34**.

Referring now to FIG. **5***a*, shown therein is a front view of another embodiment of a mask assembly **412** with integrated sensors and a remote processing unit **414** in accordance with the invention. The electrodes E**1**, E**3** and E**4**, the oximeter sensor **314**, the pressure transducer **316** and the position sensor **318** are connected to the remote processing unit **414**

which processes the signals provided by these sensors prior to transmitting the signals to the monitoring unit **16** via the cable **34**. This results in better quality signals with reduced noise and less contamination caused by motion and electromagnetic interference. The cable **34** may include a power supply connection to provide power to the remote processing unit **414**. Alternatively, the remote processing unit **414** may be battery powered. It should be understood that for this embodiment there can be various combinations of the sensors since the oximeter sensor **314**, the pressure transducer **316** and the position sensor **318** are optional.

Referring now to FIG. **5***b*, shown therein is a block diagram of the remote processing unit **414**. The remote processing unit **414** includes several interfaces for providing an electrical connection with the integrated sensors on the mask assembly **412**. The remote processing unit **414** includes a head position sensor interface **416**, an oximeter interface **418**, an electrode interface **420** and a pressure transducer interface **422** for electrical interface with the appropriate sensor. As mentioned previously, some of the sensors are optional. Accordingly, the remote processing unit **414** may not require each of the interfaces shown in FIG. **5***b*.

The remote processing unit **414** further includes an oximeter signal processor **424** that is connected to the oximeter interface **418** and a control unit **426**. The control unit **426** directs the activity of the remote processing unit **414** and processes each of the signals provided by the sensors. The control unit **426** may be a digital signal processor. It should be noted that the oximeter signal processor **424** is optional and the processing performed by the oximeter signal processor **424** may be done by the control unit **426**.

The remote processing unit **414** further includes a pre-processing unit **428** that is connected to the electrode interface **420** and an analog-to-digital converter (ADC) **430** that is connected between the pre-processing unit **428** and the control unit **426**. It is well known to those skilled in the art that the EEG, EMG and EOG signals are very small amplitude signals (on the order of micro-volts) and that pre-processing is required to remove noise from these signals and amplify these signals. Accordingly, the pre-processing block **428** includes a high-pass filter stage with a cutoff frequency of 0.1 to 1 Hz for removing large DC contact potentials and an amplification stage with a gain on the order of 1,000 V/V for amplifying the electrode signals.

The remote processing unit **414** further includes a memory unit **432** connected to the control unit **426** for storing the measured signals. The memory unit **432** may also be used for storing operational parameters for the remote processing unit **414** as well as programs that are used to process the measured signals. The memory unit **432** is non-volatile and can be a flash memory unit, and the like.

The remote processing unit **414** also includes a host communications unit **434** and a power supply unit **436** connected to the control unit **426**. The communications unit **434** directs communication between the remote processing unit **414** and the monitoring unit **16**. The communications unit **434** may be a high speed, synchronous serial port such as a UART and the like. The power supply unit **434** is connected to the power wire provided by the cable **34** and processes the power supply signal for use by the remote processing unit **414**. The processed power supply signal is provided to the control unit **426** to power the control unit **426** and for distribution to the remaining components of the remote processing unit **426**.

It should be noted that the remote processing unit **414** is optional and that all of the signal processing that is done by the remote processing unit **414** may be done by the monitoring unit **16**. In this case, the monitoring unit **16** has similar components as those shown in FIG. **5***b*.

In use, the head position interface **416** receives a position signal **438** that is provided by the position interface sensor **318** (position sensors based on mercury switches provide digital signals). The oximeter interface **418** receives a raw oximetry signal **440** from the oximeter sensor **314**. The oximeter signal processor **424** processes the raw oximeter signal **440** and provides a processed oximetry signal **442**. The electrode interface **420** receives raw electrode signals **444** from the electrodes E**1**, E**3** and E**4** and the pressure transducer interface **450** receives a raw pressure signal **446**. Both of these raw signals are sent to the pre-processing unit **428** which generates pre-processed signals **448**. The pre-processed signals **448** are then digitized by the ADC **430** resulting in digital pre-processed signals **450**. The position signal **438**, processed oximetry signal **442** and digital pre-processed signals **450** are then sent to the control unit **426**.

In an alternative, the remote processing unit **414** may also perform the sleep efficacy algorithm **36** which can be stored on the memory unit **432**. Accordingly, the remote processing unit **414** may determine the sleep profile information for the wearer **18**, generate the control signal to improve the sleep quality experienced by the wearer **18** and send the control signal to the CPAP device **14** to augment the pressure that is delivered to the nasal mask **20**. In addition, the sleep profile information may be transmitted to a caregiver through a wire connection to a computer. Wireless transmission may also be used as discussed below. The sleep efficacy algorithm **26** may employ a frontal staging algorithm to calculate the sleep profile of the CPAP wearer **18**.

Referring now to FIG. **5***c*, shown therein is a block diagram of an alternate embodiment of a remote processing unit **514** incorporating a wireless communications unit **516** and an antenna **518** in accordance with the invention. The wireless communication unit **516** runs a suitable wireless protocol such as the BLUETOOTH™ protocol which is suitable for short-range communication. For longer-range communication, the wireless communication unit **516** may employ another communications protocol such as CDMA. The remote processing unit **514** also includes a battery **520** that is connected to the power supply unit **436**. Accordingly, in this case, there is no need for the cable **34**.

For the remote processing units **412** and **512**, noise is dealt with by selecting amplifiers with a high CMRR, by having low capacitance isolation of the power supply unit **436** and having a low impedance connection from the electrodes to the skin of the wearer **18**. It should be understood that the embodiments for remote processing unit **412** and **512** are exemplary and that some of the components may be combined. For instance, the memory unit **432** and the communications unit **434** may be integrated into the control unit **426**.

Referring now to FIG. **6**, shown therein is a block diagram of an exemplary embodiment of the monitoring unit **16** of FIG. **1**. The monitoring unit **16** may be directly integrated within the CPAP device **14** or it may be separate and works alongside the CPAP device **14**. The monitoring unit **16** includes a control unit **600**, a mask interface **602**, a remote communications unit **604**, a removable non-volatile memory **606**, a memory unit **608**, a power supply unit **610** and an external communications unit **612** connected as shown in FIG. **6**.

The control unit **600** controls the operation of the monitoring unit **16** and may be a digital signal processor, a controller or the like. The mask interface **602** is an interface between the monitoring unit **16** and the sensors on the mask assembly. Accordingly, the mask interface **602** may be an electrical

interface with appropriate terminals for receiving the cable **34**. Alternatively, in the instances in which the mask assembly includes a wireless remote processing unit, the mask interface **602** may be an antenna. The remote communications unit **604** directs the transmission of data between the mask assembly and the monitoring unit **16**. In the instance in which the mask assembly includes a wireless remote processing unit, the remote communications unit **604** employs an appropriate communications protocol such as the BLUETOOTH™ protocol. In the case of a wired connection to the mask, the remote communications unit **604** may be a high speed, synchronous serial port such as a UART and the like.

The control unit **600** receives the data transmitted from the mask assembly. In one embodiment, the control unit **600** may execute the sleep efficacy algorithm **36**, which is stored in the memory unit **608**, and generate a control signal for the CPAP device **14**. In another embodiment, the remote processing unit may perform the sleep efficacy algorithm **36**, generate the control signal and send the control signal, as well as the sleep profile information, to the control unit **600**. In both cases, the control unit **600** sends the control signal to the CPAP device **14** via the external communications unit **612**. The external communications unit **612** may also be used to connect to an external computer or network for transfer of the sleep profile information. Accordingly, besides having a connection to the CPAP device **14**, the external communications unit **612** may include an Ethernet device, a USB device, a telephone or wireless modem and the like for connection to an external computing device or network.

The removable non-volatile memory **606** may store the sleep profile information that includes data, such as test scores, related to the compliance and efficacy of CPAP therapy on the wearer **18**. The removable non-volatile memory **606** may also store raw data obtained from the sensors on the mask assembly for inspection by a qualified health professional. The removable non-volatile memory **606** is optional and all of this data may be stored on the memory unit **608**.

As mentioned previously, the sleep efficacy algorithm **36** may use a frontal staging algorithm, based on at least the electrode signals, to determine which stage of sleep the wearer **18** is in. The information provided by the electrodes is important since it is well known that some sleep apnea events occur more frequently in some of the sleep stages rather than others. The sleep stages include sleep stages 1, 2, 3 and 4 and REM sleep. In some individuals, sleep apnea may be more prevalent in the REM stage. In stage 1 sleep, the EEG is characterized by low voltage, mixed frequency activity, without rapid eye movement and usually with relatively high EMG activity. Stage 2 sleep is characterized by sleep spindles, which are bursts of distinctive waves of 12 to 14 Hz predominantly seen in the central vertex region, as well as K complexes which are delineated, negative, sharp waves immediately followed by positive components lasting more than 0.5 seconds. The K complexes predominantly appear in the central vertex region. REM sleep is characterized by low voltage, mixed frequency EEG activity with the lowest EMG activity and sawtooth waves that appear in the frontal regions of the brain usually in conjunction with bursts of rapid eye movements. Muscle atonia occurs during REM sleep which can affect airway patency and result in increased sleep apnea. In addition, sleep onset can be determined by the alpha EEG waveform as well as eye blinks (i.e. the lack thereof). Sleep stages 3 and 4 are known as deep sleep states. They are characterized by the dominance of high amplitude (for example, greater than 75 μV) and low frequency (for example, 0.5 to 2 Hz) slow delta activities. Delta activities are predominantly seen in the frontal region. Accordingly, electrode position is important for detecting each of these types of signals.

In one instance, the sleep efficacy algorithm **36** activates the CPAP device **14** only once the CPAP wearer **18** falls asleep, thereby easing the transition from wake to sleep, making the therapy more comfortable and improving compliance. The sleep efficacy algorithm **36** may also use the sleep profile information to vary the CPAP titration pressure depending on the sleep stage. For example, more pressure may be delivered in the REM sleep stage in which the incidence of sleep apnea increases due to the relaxation of the throat muscles.

When combined with an automated sleep efficacy algorithm that performs sleep staging and pressure control, the mask assembly of the invention provides a quick, convenient means for monitoring and improving the sleep profile of the wearer **18**. The sleep profile information can be used by physicians to improve the quality of care and allow them to objectively assess the efficacy of treatment and monitor changes to therapy. The efficacy of therapy can be used by employers or law enforcement personnel to prevent hazardous equipment such as cars, airplanes and industrial machines from being operated by individuals who are impaired due to inadequate sleep. The efficacy of therapy can also be used by insurers to determine the need for continued treatment in order to save costs. Further, the sleep profile information can be used to control CPAP therapy.

Referring now to FIG. **7**, there is shown an alternative mask assembly **712**. The mask assembly **712** comprises a flexible forehead plate **714** for holding electrodes E**1**, E**2**, E**3** and E**4** in position on the forehead of the wearer **18** and a strap **724** for securing the forehead plate **714** to the wearer **18**. Mask assembly **712** also comprises a nasal interface **720** connected to forehead plate **714** via connector member **732**. Nasal interface **720** receives pressurized gas through a gas supply tube **730** for feeding the gas directly into the nostrils of the wearer **18** through gas outlet ports **726** of nasal interface **720**.

Nasal interface **720** is shown in FIG. **7** as being shaped as a loop extending downwardly over the wearer's face from the forehead and diverging around the nose. The divergent limbs of the loop of nasal interface **720** are joined at the bottom by a lip portion **725** which is designed to generally overlie the upper lip of the wearer **18** and be held upwardly against the wearer's nose so that outlet ports **726** feed directly into the nostrils of the wearer **18**. Outlet ports **726** may be formed as tubular extensions which extend well into the wearers nostrils or may be formed so as to otherwise substantially occlude the wearer's nostrils so that relatively little of the gas supplied through gas outlets **726** leaks out of the nostrils.

Forehead plate **714** is formed roughly in a T-shape when viewed from the front while worn by the wearer **18**. A lower portion **736** projects downwardly from forehead plate **714** and houses electrode E**1** so as to generally, or at least partly, overlie the nasion area of the wearer **18**. Electrodes E**2**, E**3** and E**4** are spaced laterally across forehead plate **714** in a similar manner to the arrangement shown in FIG. **2**A. Electrode E**2** acts as a ground electrode relative to the measured signals from electrodes E**1**, E**3** and E**4**. Electrode E**3** and E**4** are positioned in laterally extending wings **734** of forehead plate **714** so as to overlie a central part of the forehead on each lateral side in a similar manner to the arrangements shown and described in relation to FIG. **2**A.

Nasal interface **720** is connected to forehead plate **714** by connector **732** at a tubing portion **731** which extends between the nasal loop of nasal interface **720** and gas supply tube **730**. The connection achieved by connector **732** may be mechani-

cal or chemical, for example by snap fitting or adhesion. Other forms of removable or non-removable connection may be provided by connector **732**.

Strap **724** is connected to forehead plate **714** at each lateral wing **734** by any suitable attachment mechanism. As shown in FIG. **7**, strap **724** is attached to forehead plate **714** by looping through a suitably shaped slot **718** in each lateral wing **734**. Strap **724** passes around the head of wearer **18** and attaches to itself to form a loop snugly fitting around the wearer's head. The attachment of the parts of strap **724** together may be achieved by any suitable attachment mechanism.

Although not specifically shown in FIG. **7**, forehead plate **714** may comprise additional sensors, such as those shown and described in relation to other embodiments. Additionally, the features of mask assembly **712** may be combined with, or substituted for, other features of other mask assembly embodiments shown and described herein, where such combination or substitution would result in a workable mask assembly. Features described in relation to other embodiments may be used instead of, or in addition to, the features of mask assembly **712**, where such addition or substitution of features would result in a workable mask assembly.

As with other embodiments of the mask assembly, electrodes E**1**, E**2**, E**3** and E**4**, as well as any other sensors located on forehead plate **714**, may employ a wireless communication module to communicate with monitoring unit **16**. Such a wireless communication arrangement is shown and described in co-pending U.S. patent application Ser. No. 11/130,221, filed on May 17, 2005 and entitled "Wireless Physiological Monitoring System" the entire contents of which is hereby incorporated by reference. Alternatively, dedicated conductors may be connected to each such electrode or sensor and wired back to monitoring unit **16**, for example along gas supply tube **730**.

Referring now to FIG. **8**, there is shown a mask assembly **812** according to another embodiment. Mask assembly **812** is similar to mask assembly **712**, except that it uses an alternative nasal interface **820**. Mask assembly **812** has a flexible forehead plate **814** and strap **824**, which are the same as forehead plate **714** and **712**, respectively. As mask assembly **812** is substantially similar to mask assembly **712**, the same reference numerals are used to indicate the same features and functions as between the embodiments, except that the reference numerals in FIG. **8** all begin with an "8" in the hundreds column, as compared to the "7" in the hundreds column shown in FIG. **7**. Because of these similarities, and in order to avoid repetition, we will only describe the features of the embodiment shown in FIG. **8** that are different to the features of the embodiment shown in FIG. **7**.

Nasal interface **820** is of a slightly different form then nasal interface **720**, whereby the gas supply tube (not shown) feeds into nasal interface **820** via a tubing loop that extends across the cheeks of the wearer and around to the back of the head or neck, rather than looping upwardly around the nose (as in FIG. **7**). Nasal interface **820** is connected to forehead plate **814** via strap **824** using flexible connectors **832**. Flexible connectors **832** serve to maintain lip portion **825** and gas outlets **826** in place against the wearer's nose by pulling up the tubing so that it passes above the ears or across the top of the ears of the wearer as it passes around to the back of the wearers head.

Forehead plates **714** and **814** are preferably formed using printed circuit sensors and electrodes, such as those supplied by Vermed, Inc. of Vermont, USA, under the trade name Pc-Sensor. Other forms of flexible printed circuit devices which may be used to form forehead plate **714** to **814** are made by Conductive Technologies, Inc. of York, Pa., USA. Alternatively, more conventional electrodes may be used within a flexible forehead plate formed of molded plastic, such as a polyvinyl chloride (PVC) plastic. Preferably, the plastic is relatively thin and flexible to accommodate the contours of the wearer's forehead, while having sufficient structural integrity and rigidity to maintain the electrodes in their respective positions and to enable suitable attachment of the straps **724**, **824**.

The nasal interface **720**, which loops around the wearers nose, from across the central forehead, may be of a form similar to that supplied by AEIOMed, Inc. of Minnesota, USA, based on its aura interface. A nasal interface of a kind similar to nasal interface **820** may be obtained from InnoMed Technologies, Inc., of Florida, USA based on their Nasal-Aire™ product line. It should be noted that, while FIGS. **7** and **8** show only one strap for securing the mask assembly to the wearer's head, additional straps may be used in a manner similar to the straps shown and described in relation to FIGS. **1**, **2**A, **2**B, **3**, **4** and **5**A. Also, if desired, one or more of the electrodes of mask assembly **712**, **812** may be located on a part of the strap **724**, **824** or on additional straps not shown.

It should be understood that features shown and described in relation to each of the embodiments may be used in combination or substitution with any features of the other described embodiments, where such a combination or substitution would not result in an unworkable arrangement or configuration. Accordingly, the present invention is contemplated to encompass all such combinations or substitutions resulting in operative embodiments.

It should be understood that various modifications can be made to the embodiments described and illustrated herein, without departing from the invention. For instance, the invention is applicable to other types of gas delivery devices such as variable positive air pressure devices, demand positive pressure devices and other variations of such devices. The invention can also be used in other instances where an individual wears a mask as well as sensors for gathering physiological data such as in critical care units. In addition, it should be understood that the particular masks shown herein are shown as examples and that the invention is applicable to other mask designs.

The invention claimed is:

1. A mask assembly adapted to be worn by a wearer for treatment of a medical condition, comprising:

a mask shaped to fit over at least the nose of the person, the mask including a gas inlet for providing pressurized gas to the wearer;

a harness assembly attached to the mask, the harness assembly including a plurality of straps for securing the mask assembly to the head of the wearer; and

sensors located on at least one of the mask and the harness assembly for providing physiological information about the person for determining efficacy of treatment and/or for varying operational parameters of the treatment, wherein the sensors include a first electrode for positioning adjacent a nasion area of the head of the wearer, a second electrode for positioning at a first forehead area of the wearer, and a third electrode for positioning at a second forehead area laterally separated from the first forehead area.

2. The mask assembly of claim **1**, wherein the first, second and third electrodes are positioned in a triangular configuration.

3. The mask assembly of claim **1**, wherein the mask includes a vertical mounting plate extending upwardly from the top of the mask and wherein the first electrode is located

on the mask and a fourth electrode is located on the vertical mounting plate at the central forehead region of the person.

4. The mask assembly of claim **1**, wherein the mask includes a vertical mounting plate extending upwardly from the top of the mask and a forehead support member attached horizontally therewith, the forehead support member having vertically elongated apertures at either end, and wherein the harness assembly includes right and left upper straps that engage the corresponding elongated aperture on the forehead support member, wherein the first electrode is located on the mask, the second electrode is located the upper right strap horizontally offset with respect to the center of the right eye of the wearer, and the third electrode is located on the upper left strap horizontally offset with respect to the center of the left eye of the wearer.

5. The mask assembly of claim **1**, wherein the mask includes a vertical mounting plate extending upwardly from the top of the mask and a forehead support member attached horizontally therewith, the forehead support member having vertically elongated apertures at either end, and wherein the harness assembly includes right and left upper straps that engage the corresponding elongated aperture on the forehead support member, right and left lower straps that engage elongated apertures at the bottom of the mask, a right vertical strap behind the right ear of the wearer that connects the right upper strap to the right lower strap and a left vertical strap behind the left ear of the wearer that connects the left upper strap to the left lower strap, the right and left vertical straps located proximally to the right and left mastoids of the wearer, wherein the second electrode is located at the upper right strap horizontally offset with respect to the center of the right eye of the wearer, the third electrode is located at the upper left strap horizontally offset with respect to the center of the left eye of the wearer, and a fourth electrode is located at one of the right and left vertical straps proximally to the corresponding mastoid of the wearer.

6. The mask assembly of claim **1**, wherein the mask includes a vertical mounting plate extending upwardly from the top of the mask and a forehead support member attached horizontally therewith, the forehead support member having vertically elongated apertures at either end, and wherein the harness assembly includes right and left upper straps that engage the corresponding elongated aperture on the forehead support member, right and left lower straps that engage elongated apertures at either side near the bottom of the mask, a right vertical strap behind the right ear of the wearer that connects the right upper strap to the right lower strap and a left vertical strap behind the left ear of the wearer that connects the let upper strap to the left lower strap, the right and left vertical straps located proximally to the right and left mastoids of the wearer, wherein a fourth electrode is located at the vertical mounting plate at the central forehead region of the wearer and a fifth electrode is located at one of the right and left vertical straps proximally to the corresponding mastoid of the wearer.

7. The mask assembly of claim **1**, wherein the mask includes a forehead support member extending vertically from the top of the mask, the forehead support member having right and left horizontal ends that extends above the eyebrows of the wearer, wherein the first electrode is located on the mask, the second electrode is located on the right horizontal end of the forehead support member above the right eyebrow of the wearer and horizontally offset with respect to the center of the right eye of the wearer, and the third electrode is located on the left horizontal end of the forehead support member above the left eyebrow of the wearer and horizontally offset with respect to the center of the left eye of the wearer.

8. The mask assembly of claim **1**, wherein the sensors further include a blood oximeter sensor.

9. The mask assembly of claim **8**, wherein the mask includes a forehead support member extending vertically therefrom, the blood oximeter sensor being located at the forehead support member in close proximity to the forehead of the wearer.

10. The mask assembly of claim **1**, wherein the sensors further include a pressure transducer sensor disposed within the mask.

11. The mask assembly of claim **1**, wherein the sensors further include a position sensor.

12. The mask assembly of claim **1**, wherein the mask includes a forehead support member extending vertically therefrom, the position sensor being located at the forehead support member.

13. The mask assembly of claim **1**, wherein the sensors further include at least two of a blood oximeter sensor, a pressure transducer and a position sensor.

14. The mask assembly of claim **1**, wherein the mask assembly further includes a remote processing unit connected to the sensors for processing the physiological information.

15. The mask assembly of claim **14**, wherein the remote processing unit includes a sleep efficacy algorithm for processing the physiological information and generating a sleep information profile for the wearer.

16. The mask assembly of claim **14**, wherein the remote processing unit includes a wireless transceiver for wirelessly transmitting signals related to the physiological information, and a battery for providing power to the remote processing unit.

17. A mask assembly adapted to be worn by a wearer for treatment of a medical condition, comprising:

a mask shaped to fit over at least the nose of the wearer, the mask including a gas inlet for providing pressurized gas to the wearer;

a harness assembly attached to the mask, the harness assembly including a plurality of straps for securing the mask assembly to the head of the wearer; and

a plurality of electrodes located on the inside of at least one of the mask and the harness assembly and being spaced with regards to one another for sensing physiological information including at least one of the EEG, EMG and EOG of the wearer whereby the physiological information is used to monitor the efficacy of treatment or to vary operational parameters of the treatment, wherein the sensors include a first electrode for positioning adjacent a nasion area of the head of the wearer, a second electrode for positioning at a first forehead area of the wearer, and a third electrode for positioning at a second forehead area laterally separated from the first forehead area.

18. A mask assembly adapted to be worn by a wearer for treatment of a medical condition, the mask assembly including sensors located on the mask assembly for sensing physiological information from the wearer and a remote processing unit located on the mask assembly and connected to the sensors for processing the physiological information, wherein the sensors include a first electrode for positioning adjacent a nasion area of the head of the wearer, a second electrode for positioning at a first forehead area of the wearer, and a third electrode for positioning at a second forehead area laterally separated from the first forehead area.

19. A mask assembly for wearing by a wearer during treatment of a medical condition, the mask assembly comprising:

a nasal interface for providing pressurized gas to the wearer, the nasal interface comprising a gas inlet for

receiving a source of gas and a gas outlet for providing gas directly to the nares of the wearer;

at least one strap connected to the nasal interface for securing the mask assembly to the head of the wearer; and

a forehead member for location on a forehead of the wearer, the forehead member comprising sensors for measuring physiological signals of the wearer during treatment of the medical condition, wherein the sensors include a first electrode for positioning adjacent a nasion area of the head of the wearer, a second electrode for positioning at a first forehead area of the wearer, and a third electrode for positioning at a second forehead area laterally separated from the first forehead area.

20. The mask assembly of claim **19**, wherein the first, second and third electrodes are disposed so as to contact the skin of the forehead of the wearer during the treatment and to sense the physiological signals.

21. The mask assembly of claim **20**, wherein the second electrode is disposed on the forehead member so as to overlie a portion of the forehead of the wearer vertically above the nasion.

22. The mask assembly of claim **19**, wherein the forehead member, when worn by the wearer, extends laterally across the wearer's forehead and has a lower portion that at least partly overlies the nasion area of the wearer.

23. The mask assembly of claim **22**, wherein the first electrode is disposed on the lower portion of the forehead member and the second and third electrodes are disposed on lateral extensions of the forehead member.

24. An electrode placement assembly for locating electrodes on a forehead of a wearer of the electrode placement assembly, comprising:

a forehead placement assembly dimensioned to extend laterally across the forehead of the wearer and having a lower portion for at least partly overlying a nasion area of the wearer;

at least one strap connected to the forehead placement assembly for securing the electrode placement assembly to the wearer; and

a plurality of electrodes positioned on at least one of the forehead placement assembly and the at least one strap so that the plurality of electrodes contact the skin of the wearer, wherein the sensors include a first electrode for positioning adjacent a nasion area of the head of the wearer, a second electrode for positioning at a first forehead area of the wearer, and a third electrode for positioning at a second forehead area laterally separated from the first forehead area.

25. The assembly of claim **24**, further comprising attachment means for attaching a nasal interface to the electrode placement assembly so that the nasal interface is positioned to provide gas to the nares of the wearer.

26. The assembly of claim **25**, wherein the attachment means comprises flexible attachment members for attaching the nasal interface to the at least one strap.

27. The assembly of claim **25**, wherein the attachment means comprises a connector member positioned on the forehead placement assembly for connecting the nasal interface to the forehead placement assembly.

28. The assembly of claim **24**, wherein the forehead placement assembly comprises a flexible unitary plate.

29. The assembly of claim **24**, further comprising a fourth electrode located on the forehead placement assembly to be positioned on the forehead of the wearer between the second and third electrodes.

* * * * *

UNITED STATES PATENT AND TRADEMARK OFFICE

CERTIFICATE OF CORRECTION

PATENT NO. : 7,575,005 B2
APPLICATION NO. : 11/131284
DATED : August 18, 2009
INVENTOR(S) : John Robert Mumford, Ronald Leon Kurtz and Jianping Wu

It is certified that error appears in the above-identified patent and that said Letters Patent is hereby corrected as shown below:

Claim 4 of the above-referenced patent contains a typo. At Claim 4, at column 19, line 11 the word "on" should be added after the word "located". At Claim 12, at column 20, line 13, the number "1" should be deleted and the number "11" substituted in its place.

Signed and Sealed this
Twenty-eighth Day of December, 2010

David J. Kappos

David J. Kappos
Director of the United States Patent and Trademark Office