Patient Monitoring and Anesthetic Management

A Physiological Communications Network

Stewart A. Wilber, MD, and William S. Derrick, MD

Many ill-defined but significant factors relating to the anesthetized patient enter into therapeutic and diagnostic decisions governing his care. These factors have not yet been reduced to structured statements or formulas to provide answers which the clinician can accept with confidence. However, a physiological communication network consisting of an automatic transducer system and a digital computer is now being used to accumulate and present accurate, timely physiological data to the surgical team for immediate use in clinical decision-making. These data are also stored in a format which allows easy retrieval for later study of clinical cause and effect. Modern concepts of mathematics, statistics, and technology are being used to reduce these data to computer-solvable, structured statements or models which relate clinical events to physiological variations. These models may be used for making decisions in the clinic and as tools for testing biological theories.

In anesthesiology, acute extensive variations from normal function are imminent at all times and are expected. Cause and effect relationships are often obscured by simultaneous changes so subtle that a definitive diagnosis cannot be made. From the clinician's point of view, inconstant values for physiological function (within prescribed limits) are the rule. Those fluctuations which represent abnormality must be recognized and treated accordingly.

The alterations in physiological activity produced by the administration of an anesthetic drug can be explained only by a study of patient history, clinical events, and current physiological information. In actual practice, the clinical anesthesiologist makes and records his observations, correlates them with his theoretical knowledge and clinical experience, and makes his diagnosis and prognosis (prediction). Therapy in turn depends upon such factors as magnitude and duration of surgical treatment, level of central nervous system depression required for the procedure, and other practical matters that relate to patient care before, during, and after completion of the procedure.

From the Section on Anesthesiology, University of Texas, M. D. Anderson Hospital and Tumor Institute, Houston.

Read before the Section on Anesthesiology at the 113th annual convention of the American Medical Association, San Francisco, June 22, 1964.

Reprint requests to M. D. Anderson Hospital and Tumor Institute, Houston 25 (Dr. Wilber).

Table 1.—Steps Used by an Anesthesiologist in Making Decisions

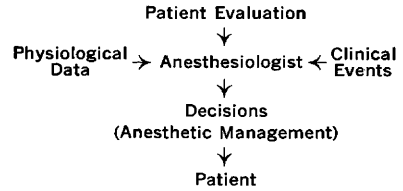

Although many clinical decisions made by the anesthesiologist seem to be intuitive, they are, in reality, probabilistic and based upon interchangeable logical approaches. One approach utilizes a structured logic which permits the mathematical formulation of specific relationships from well-ordered and well-defined information and leads to a finite number of alternatives.

A second logical approach is of a decision-making or heuristic nature. The exact relationships existing between unordered and poorly defined bits of information may be unknown, and the anesthesiologist makes his diagnostic and therapeutic decisions by correlating data on patient history, physical condition, changes in physiological activity, and clinical events (Table 1). Heuristic or decision-making anesthetic management is a study in observation, measurement, and comparison (by analogy to memorized facts or experience). By these means the clinician selects the theoretical and practical physiological explanations which best describe the clinical state of his patient. This is clinical pattern recognition.[1] While the latter logical approach dominates clinical decision-making and thwarts those who try to reduce clinical medicine to mathematical statements, efforts are being made to provide physicians with better understanding of the logical concepts used in making decisions.[2,3]

These insights will enable the physiologist to recognize functional changes more rapidly, make more accurate clinical decisions, and develop better tools for study of the anesthetized human subject.

Monitors and Monitoring

To increase accuracy and speed in decision making, the anesthesiologist searches for efficient, re-

ResMed Corp. - Ex. 1055
Page 1 of 6

Downloaded from jamanetwork.com by Johns Hopkins University user on 11/04/2024

liable monitoring devices to augment his classical observations and interpretations. The question arises:

> What is a monitoring device, how might it be used effectively without lulling the anesthesiologist into complacency and what positive results may be expected from it, over and above information obtained from currently accepted approaches to clinical anesthetic care?[4]

A monitor is an instrument that measures (as vital signs during surgery) or gives warning.

To monitor is to watch, observe, or check, especially for a special purpose.

Data collection is a major function of a physiological monitoring system; however, a system will not actually "monitor" unless it has some means of analyzing the acquired data. In addition to observing and measuring indicators of physiological function, the monitoring system should process, record, and display data. The system will be even more effective if decisions based on experimentation and previous clinical experience can be programmed into it to indicate when measured values are exceeding predetermined limits. In a complete physiological communications and monitoring network, these alerts would be based on accurate and objective data collected by the system and utilized in the construction of logical systems or clinical models for interpreting clinical physiological activity.

Arterial blood pressure, pulse, respiration, and temperature are considered to be valid indicators of physiological function and are monitored and recorded as accurately as possible. The exacting demands of modern surgical techniques (eg cardiopulmonary by-pass, hypothermia for reducing the metabolic rate, willful arrest of the heart, and hypotensive techniques for minimizing blood loss) require continuous measurement of arterial and central venous pressures, frequent blood gas analysis, and close attention to blood loss. When imposed upon the surgical team, these demands curtail the time available for monitoring and recording the four vital signs and much valuable clinical information is lost. It would seem that monitoring instruments which would observe, record, and interpret data for the clinician would be in great demand; however, this is not always so.

This is partly because of the clinician's inability and often lack of willingness to define problems in terms the electronic engineer can understand. A second reason is the expense of the engineering and technical design of such equipment. Other clinically valid reasons for not accepting monitoring equipment are lack of reliable transducer systems, delay associated with their use, explosion hazards, and the cumbersomeness of much existing apparatus.

The first obstacle can be overcome by consultation between the engineer and the clinician who work out their problems in the laboratory and the clinic.[5] Cost will become less of a factor with the demonstration of the inherent value of monitoring instruments which will encourage their wider use and permit larger production runs. The clinical objections outlined above will become less important as applied modern technology leads to low power, miniaturized, explosion-free systems that permit multiple use of transducer systems and data channels, simplifying their application in the surgical suite.

Design Considerations

The design of a physiological communications network for patient monitoring is governed by the same logical considerations the physician uses in making clinical decisions. Other considerations for a total patient monitoring system include the following: (1) transducer requirements; (2) signal conditioning electronic instruments; (3) data reduction which includes data acquisition, analog to digital (analog-digital [A-D]) conversion, data processing,[6] and data display; and (4) the general purpose digital computer to reduce data to usable clinical decisions and clinical models.[7] A scheme for a total patient monitoring system including data processing, data reduction, data display, clinical decision-making, and dynamic biological simulation based on accurate real time physiological data is depicted in Fig 1.

Transducers.—A full awareness of the biological information desired and the conditions under which it is to be acquired are essential before a wise choice of transducers can be made.[8-10] In actual practice, a physiological communications system for routine use should have sensors which operate without intervention once they have been placed; at the same time, patient trauma must be minimized commensurate with the physiological information required.

Further restrictions in the choice of transducers are imposed by practical work conditions in the surgical suite and the urgency of the clinical situation which may deny the anesthesiologist time to apply the required instruments. At present, many instruments are available although they are primarily of laboratory design. The state of the art is advancing rapidly, however, and efficient, reliable transducers for clinical use are being developed.

Signal Conditioning Electronics.—Signal conditioning requirements for biological sensors vary widely. To maintain fidelity during amplification and attenuation, the frequency, voltage, amplitude, and power level of the signals from each device require separate attention.[11] Since all information from physiological sensors is not representative of functional change, the electrical characteristics of the instruments and the signal being received must be thoroughly understood if noise, artifacts caused by disturbances in sensor devices, malfunctioning amplifiers, and unrecognized physiological variations are to be recognized and the final output of the instrument depended upon.

New concepts in design (eg, microtechnology, the efficient use of space, and reduction in power consumption) are making it possible to design electronic data systems of even greater fidelity and

ResMed Corp. - Ex. 1055
Page 2 of 6
Downloaded from jamanetwork.com by Johns Hopkins University user on 11/04/2024

Table 2.—Data Coded for Semiautomatic Entry

Clinical Event	Code	Message
Traction	029	Pelvic
	033	Carotid sinus
Hemorrhage	038	Mild
	039	Acute, massive
Pulse	041	Weak, thready
	043	Irregular
Cardiac Arrest	044	Cardiac—Respiratory arrest Transthoracic manual massage

reliability. These data-gathering systems used in conjunction with modern communications theory and techniques make online patient monitoring a practical reality.

Data Reduction.—For total anesthetic care data accumulated from three different sources are required. These data are in different modes and will require three different input routes to the computer. The following preoperative indicators of the patient's physical and functioning state should be fed to the computer before monitoring begins: patient identification, medical history, results of physical and laboratory examinations, therapy prior to present procedures, physical status (classification established by the American Society of Anesthesiologists[12]), and previous anesthetic experience. Although these hard data will be entered manually in existing systems, automatic input from data storage and retrieval systems will eventually be provided.

Physiological change produced by surgical manipulation and other features such as position change, drug therapy, and depth of anesthesia will be transmitted by the anesthesiologist to the monitor system via clinical information inputs. Representative examples of data coded for semiautomatic entry are listed in Table 2.

All blood pressure, pulse, respiration, and temperature measurements will be made automatically at preset time intervals (and on demand), and the data immediately relayed to the computer.

All variables to be processed by the digital computer must be accumulated in digital form. Two basic signal types representing these variables are available from transducer-electronic systems. Pulsed signals such as those derived from a pulse detector must be counted. Level or continuous signals have a range of frequencies, voltages, and amplitudes which must be considered when sampling them for conversion to digital form.

The useful information in this type of analog signal is retained if the signal is sampled each second at a rate twice the highest frequency contained in the original signal. Pattern recognition by the computer is dependent on retaining this information. Sampling rates of up to 1,000 (utilized in automatic analysis of the ECG) have permitted precise reconstitution of the original signal using digital data derived from A-D conversion.[13]

The basic principles of analog to digital conversion are readily applicable to all biological measurements once an accurate analog representing these measurements is available. A format for sampling

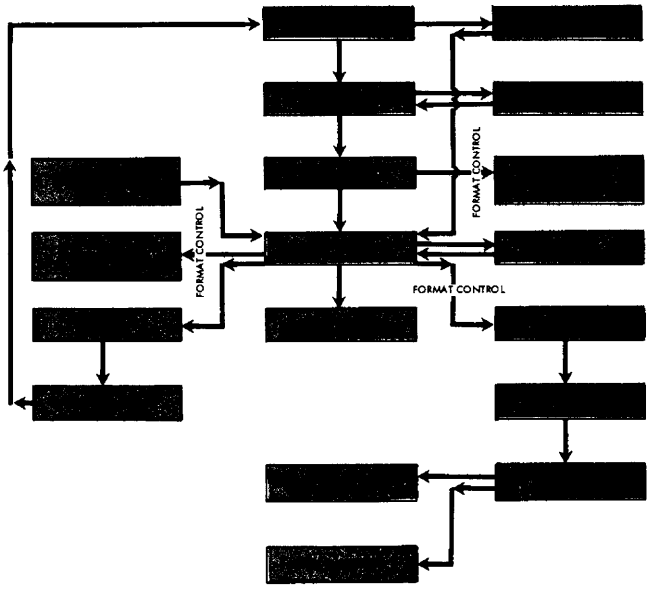

1. Total system of physiological control.

and storing large volumes of accurate data with special reference to time, must be established; biological and clinical data is to be processed in a *real-time sense* for immediate clinical use as well as for later retrieval. The immediate availability of data is a main foundation for the construction of logical systems for use in on-line decision-making. Timing circuits which synchronize the sequence of data conversion with the initiating events are required for this purpose.

Data processing is a series of planned operations upon information to achieve a desired result. This is accomplished in the digital computer through a plan developed by the human user who applies his skill and imagination to the use of the elements which comprise the computer system. The first step is the accumulation of data in a format acceptable to the system's input devices. This data must be numerical or a numerical representation of the experimental data. The input devices may be card readers, tape readers, or random access files. Techniques for direct human input via voice or writing are under development at this time. Data may be entered continuously as it is being processed, or all at one time; in either case, a data filing system or storage system must be provided. This may take many forms, including random access files and a central core memory of the computer directly addressable by the central processing unit of the system.

In certain applications, including chemical process control and patient monitoring, provision for interrupting the central processor with current data is essential; the interrupt technique of data insertion may be employed. After the new data have been inserted, the computer is released to return to routine matters in systems control. In patient monitoring, this information may consist of upgraded calibration curves for transducers and elec-

ResMed Corp. - Ex. 1055
Page 3 of 6
Downloaded from jamanetwork.com by Johns Hopkins University user on 11/04/2024

tronic systems, indicators of artifact, or instructions to the computer to utilize subroutine programs for more extensive analysis of current physiological data.

The central processor is the heart of the computer system where all arithmetic-logical operations are performed, including the testing of various conditions encountered during processing and the application of results to modify the system or to alert the computer operator that corrective measures are essential. The logical accumulation of data and the manner in which it is processed determine the effectiveness and usable output of the system. The ability of the computer to manipulate data in any way the operator desires, and to present it to him in useful form, is perhaps the single most important consideration of the medical investigator in his use of the digital computer. To guide the medical investigator in efficient use of the computer, basic essential background considerations have been outlined by Ledley.[14]

These basic background considerations are basic coding and programming; sampling methods for digitizing and interpreting experimentally generated data; minimum, but basic and reliable electronics and a knowledge of analog to digital conversion; origins of numbers, significant figures, and how arithmetic affects them and their relationship to relative errors; meaning of the function concept, classifications of function by series, or other numerical techniques from function evaluations; the meaning and utilization of differential equations and techniques for their numerical evaluation; elements of modern algebra including Boolean and related subjects; basic probability statistics; and critical analysis and techniques of the scientific method such as model building, testing of hypotheses, and the problems of overdetermination and underdetermination in systems.

The last link in the physiological communications network is the data display to the surgical team. For this problem in human engineering, consideration must be given to the likes, dislikes, prejudices, and enthusiasms of the team before display and alerting devices are chosen.

Physical dimensions and configuration will be dictated by the need for flexibility in location and display format and the desire of the surgical team to observe the data display. Data can be displayed in either analog or digital form, or both.

Ratemeters for pulse and respiration indicate average rates and may be used as indicators that the digital system is functioning properly. This type of display gives the anesthesiologist the same type of information that he gets from keeping a finger on an artery. Instrument lag ordinarily will not permit detection of rapidly occurring changes of short duration in the measured variable.

Direct write-out or oscilloscopic presentations of continuous analog signals such as the ECG do not permit rapid reference to passed events unless paper travel is maintained at a few millimeters per second. Slow paper travel, however, does not give discrete information for short time intervals and, in effect, smooths out the analog to the point that it is meaningless as a timely indicator of degree of variation. Until automatic analysis for rapid continuous analog signals can be performed in the operating suite, this type of signal will remain an essential feature in patient monitoring systems.[15]

The anesthesiologist is accustomed to seeing a graphic record of physiological variables which he makes by plotting digital values for his observations. This type of record has historical precedent to recommend it and probably should be planned as a part of any data system. Graphic display to permit ready reference to past events as well as to provide a permanent record for the patient chart is feasible using automatic computer-controlled equipment to plot all data online as it is accumulated.

Many techniques, including television, typewriters and printers, digital view boxes, and image projectors, have been tried for the presentation of digital data; each has merit. Initial cost is high and must be considered a major factor in physician and hospital acceptance.

Final decisions on the technique to be adopted will depend on the amount of money to be spent, the flexibility required, and the willingness of the clinician to commit himself to the use of such an installation.

General Purpose Digital Computer.—Although automatic transducer systems provide both analog and digital output without a computer, full-scale patient monitoring involving decision-making and activation of alerting devices requires data reduction and control over data output. The power of the digital computer to process clinical data and use that data to make logical choices and decisions is at the disposal of the user who organizes the data and programs the computer.[16,17] Clinical pattern recognition can be accomplished by presenting data pertaining to a clinical event to a computer which tests these data against stored information describing known events that have occurred in comparable situations. Patterns which emerge will at first seem crude and incomplete, but the clinician can commit his logical processes to models which will upgrade the ability of the system to present a refined pattern.

The wide use of clinical models, as these statements may be designated, awaits two major developments: (1) the conversion of the clinician's thinking into computer solvable statements that accurately portray the clinical picture; and (2) the development of heuristic or decision-making programs to direct the computer in the search for the most probable explanation of events related by these clinical statements.

An example of clinical data reduction is presented by Carbery et al[18] who reported a simultaneous study of ECG, the phonocardiogram, the ballistocardiogram, and pulse rate. Forty-five patients were divided into three groups: (1) those

ResMed Corp. - Ex. 1055
Page 4 of 6
Downloaded from jamanetwork.com by Johns Hopkins University user on 11/04/2024

Table 3.—Clinical Anethesia Record as Simulated by the Computer

Patient's Name 44738 Age 63 Wt 170 Sex F Color W.
Date Abdominal Hysterectomy
Surgeon
Anesthesiologist

Time	Res, R/M	Puls, B/M	Syst, Mm	Dias, Mm	Events
747					Position supine
747					Dextrose + water
751	12	72	166	84	
754	12	72	150	84	
757					Thiopental 075.00mg
758					N20/oxygen 004.1 liters
759	12	64	160	84	
801					Ether begun
850	22	60	138	85	
853	22	56	150	90	
854					Position trendelenburg
855	22	60	155	100	Ether increased
858	30	60	150	90	Curare 000.75mg
859					Ether decreased
859					Surgery explore
901	42	64	105	85	Pulse irregular
902					Ether decreased
904	24	52	110	85	Surgery hold
907	24	64	140	90	
	Authentication				Date

considered normal; (2) those with ventricular hypertrophy caused by hypertension; and (3) those with ventricular hypertrophy caused by aortic valvulitis. Automatic pattern recognition based on considerations of time, slope, and amplitude of the signals was accomplished by computer programs. These reduced data were used to construct a multidimensional probability distribution for each group, and to indicate where the variables for each subject fell within the distribution. The significant variables of each index of comparison for the three groups were examined by determining the mean and variance of each variable and the correlation coefficient of each variable with respect to every other variable. Significant degrees of correlation were found between those variables which separated the normal subject from the two groups of subjects with pathological changes, and those variables which distinguished the abnormal groups from each other. The statistical techniques used were, in effect, substituted for the clinician's experience, which is basically the capacity to memorize the electrocardiographic wave forms seen in normal subjects and to compare them with those measured in patients with electrocardiographic abnormality. These and similar techniques could be used to generate warning signals and to make differential diagnostic decisions about the cardiac arrhythmias often seen in anesthetized patients.

Online Digital Computer Patient Monitoring System

Transducer-Electronics Terminal.—An operational digital computer patient monitoring system has been developed at The University of Texas M. D. Anderson Hospital and Tumor Institute. The physiological signal source for the network is an automatic transducer and signal-conditioning terminal which receives all analog signals representing indirect arterial blood pressures, pulse, respiration, and temperature (Fig 2).

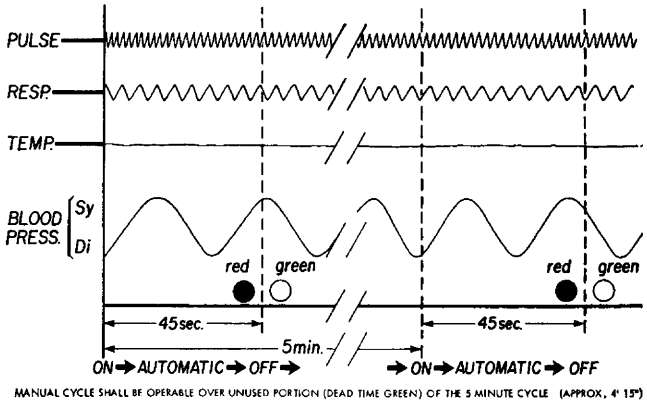

2. Automatic transducer-electronic terminal.

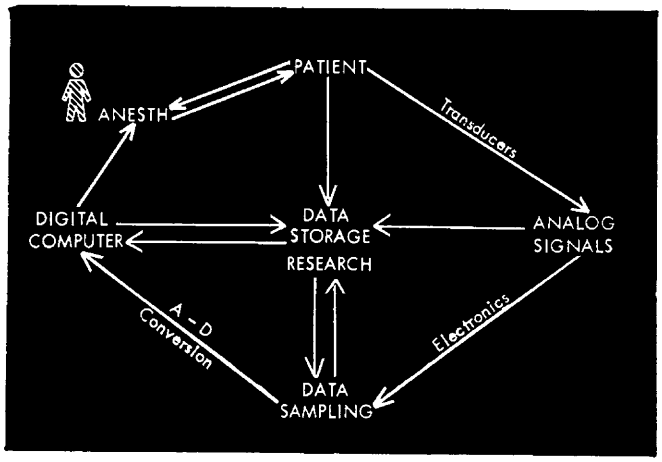

3. Data flow in complete information system.

The terminal is controlled by a switch on the blood pressure unit which can be activated automatically every five or ten minutes, or manually every 45 to 60 seconds. This same switch starts a 30-second period during which respiratory rate and pulse rate are counted. Conversion to minute rate is performed by the computer. All data are displayed on the console in analog meter form.

Computer Hardware.—On command from the transducer-electronics terminal, the computer accepts patient data in analog form. These data are converted to digital form by the analog-digital converter and stored in computer memory. Processing and reduction of the data are performed immediately and the results are printed in tabular form with the proper time notation. Table 3 shows the actual form in which data is displayed by the system. The flow of data in the completed communications circuit consisting of transducers, electronics, signal conversion equipment, and computer-display is diagramed in Fig 3.

Monitoring Program.—Using the stored data accumulated from the first ten cycles of the transducer-electronics system, calculations are performed to obtain upper and lower limits for each physio-

ResMed Corp. - Ex. 1055
Page 5 of 6

Downloaded from jamanetwork.com by Johns Hopkins University user on 11/04/2024

logical variable. These limits are formed by calculating the mean and stardard deviation for ten readings and multiplying the standard deviation by a confidence factor K which can be modified as desired to fit the expected variation in the individual being monitored. This value, KS_1, is added or subtracted from the mean to get upper and lower limit values.

This limit may be represented as follows:

$$\text{upper limit} = \bar{x} + K\,(S_1)$$
$$\text{lower limit} = \bar{x} - K\,(S_1)$$

Where $\bar{x}$ = mean of ten readings of the variable x

K = confidence factor

S_1 = standard deviation

The size of K determines the probability of obtaining false alarms when using the limit check. As K grows smaller, the probability of any reading exceeding the limit becomes greater, but sensitivity to variation is increased.

The probability of being wrong when we assume a violation of limits, calculated by using various values of K, is given by P.

The error probability based on K values is:

K =	± 1.383	± 1.833	± 2.262	± 3.25
P =	20%	10%	5%	1%

Data accumulated from each cycle of the transducer system is compared with these limits, and any violation is printed out and punched into cards. If changes occur which are still clinically acceptable, a new mean and limits can be computed at any time from data stored during the last ten cycles of the transducer-electronics system.

Off line studies are being conducted on trends and on the possibility of forecasting changes in physiological function. The extent of change of each variable from its calculated mean is compared to a smoothed value (a running average) calculated from four previous data cycles. Each of the variables is given a weighted code number, depending on how rapidly and how far it has moved from its mean. The sum of the code numbers assigned to each variable is an indicator of total physiological deviation from the limit areas. Condition indicator statements based on Boolean logic are being tested to determine to what extent this type of model may contribute to decision-making in the surgical clinic. Based on existing knowledge of clinical systems, these statements provide alternative sets of events which the computer can relate or compare to current measurements from the system under study, thereby assigning statistical validity to diagnostic inferences made by anesthesiologists.

Summary

The use of modern data processing techniques to aid the anesthesiologist in clinical decision-making has been discussed. Transducer-electronics instrumentation for the simultaneous measurement of blood pressure, pulse, respiration, and temperature has been presented as operational and effective. The accurate and orderly recording of these data by computer techniques has been demonstrated to be feasible.

With accurate, objective, and more timely data at his disposal, the clinician needs only to employ good experimental design in the clinic to make searching and valid correlations between physiological variations and the total response of the stressed human subject. The digital computer makes this possible both in the immediate clinical situation and in less stressful moments when the clinician can contrast and compare variation in a single patient to his previous experience which has been preserved and stored in the memory of the computer system.

Data from these studies can be used to develop Boolean or other logical decision-making systems. When these clinical models are used together with dynamic models of physiological systems they will provide new insight into physiological function, will help validate or disprove old theories, and lead to better understanding of clinical anesthetic behavior.

This will be a major step toward the clinical physician's primary goal and greatest accomplishment—better patient care.

References

1. Feinstein, A.R.: Boolean Algebra and Clinical Taxonomy: I. Analytic Synthesis of General Spectrum of Human Disease, *New Eng J Med* **269**:929-938, 1963.

2. Rutstein, D.D.; Eden, M.; and Schutzenberger, M.P.: Report on Mathematics in Medical Sciences, *New Eng J Med* **265**:172-176, 1961.

3. Shindell, S.: Statistics, Science and Sense: I. Population and Sampling; II. Summarization of Data; III. Probability; IV. Tests of Association; V. Hypotheses and Conclusions *JAMA* **186**:499-502, 570-574, 637-640, 780-784, 849-853 (Nov) 1963.

4. Cullen, S.C.: Cybernesthesia, *Anesthesiology* **24**:110-111, 1963.

5. Geddes, L.A.: Ten Commandments, *Amer J Med Electronics* **1**:247, 1962.

6. *Data Processing Yearbook*, Detroit: American Data Processing, Inc., 1963.

7. Tocher, K.D.: *Art of Simulation*, Princeton, NJ: D. Van Nostrand Co., Inc., 1963.

8. Fry, D.L: Physiologic Recording by Modern Instruments With Particular Reference to Pressure Recording, *Physiol Rev* **40**:753-788, 1960.

9. VanWeerden, G.J.: Some Clinical Applications of Capnography, *Amer J Med Electronics* **1**:199-207, 1962.

10. Koeff, S.T., et al: Continuous Measurements of Intravascular Oxygen Tension in Normal Adults, *J Clin Invest* **41**:1125-1133, 1962.

11. Holaday, D.: Monitoring During Anesthesia, *Anesthesiology* **22**:643-644, 1961.

12. American Society of Anesthesiologists, House of Delegates Amendment of Classification of Physical Status, New York, Oct, 1962.

13. Pipberger, H.V., et al: Preparation of Electrocardiographic Data for Analysis by Digital Electronic Computer, *Circulation* **2**:413-418, 1960.

14. Ledley, R.S.: Digital Electronic Computer in Biomedical Science, *Science* **130**:1225-1234, 1959.

15. Cannard, T.H., et al: Electrocardiogram During Anesthesia and Surgery, *Anesthesiology* **21**:194-202, 1960.

16. Schenthal, J.E.; Sweeney, J.W.; and Nettleton, W., Jr.: Clinical Applications of Large-Scale Electronic Data Processing Apparatus I. New Concepts in Clinical Use of the Electronic Digital Computer, *JAMA* **173**:6-11 (May 7) 1960.

17. Schenthal, J.E.; Sweeney, J.W.; and Nettleton, W., Jr.: Clinical Application of Electronic Data Processing Apparatus II. New Methodology in Clinical Record Storage, *JAMA* **178**:267-270 (Oct 21) 1961.

18. Carbery, W.J., et al: Automatic Methods for the Analysis of Physiologic Data, *Aerospace Med* **32**:52-59, 1961.

ResMed Corp. - Ex. 1055
Page 6 of 6
Downloaded from jamanetwork.com by Johns Hopkins University user on 11/04/2024