(12) INTERNATIONAL APPLICATION PUBLISHED UNDER THE PATENT COOPERATION TREATY (PCT)

(19) World Intellectual Property Organization
International Bureau

(43) International Publication Date
21 June 2001 (21.06.2001)

PCT

(10) International Publication Number
WO 01/45014 A1

(51) International Patent Classification[7]: G06F 17/60

(21) International Application Number: PCT/US00/34159

(22) International Filing Date:
16 December 2000 (16.12.2000)

(25) Filing Language: English

(26) Publication Language: English

(30) Priority Data:
60/172,486 17 December 1999 (17.12.1999) US

(71) Applicant and
(72) Inventor: QUY, Roger, J. [GB/US]; 14 Topside Way, Mill Valley, CA 94941 (US).

(74) Agent: WIECZOREK, Mark, D.; 5038 Saratoga Avenue, San Diego, CA 92107 (US).

(81) Designated States *(national)*: CA, JP.

(84) Designated States *(regional)*: European patent (AT, BE, CH, CY, DE, DK, ES, FI, FR, GB, GR, IE, IT, LU, MC, NL, PT, SE, TR).

Published:
— *With international search report.*
— *Before the expiration of the time limit for amending the claims and to be republished in the event of receipt of amendments.*

For two-letter codes and other abbreviations, refer to the "Guidance Notes on Codes and Abbreviations" appearing at the beginning of each regular issue of the PCT Gazette.

(54) Title: METHOD AND APPARATUS FOR PATIENT MONITORING WITH WIRELESS INTERNET CONNECTIVITY

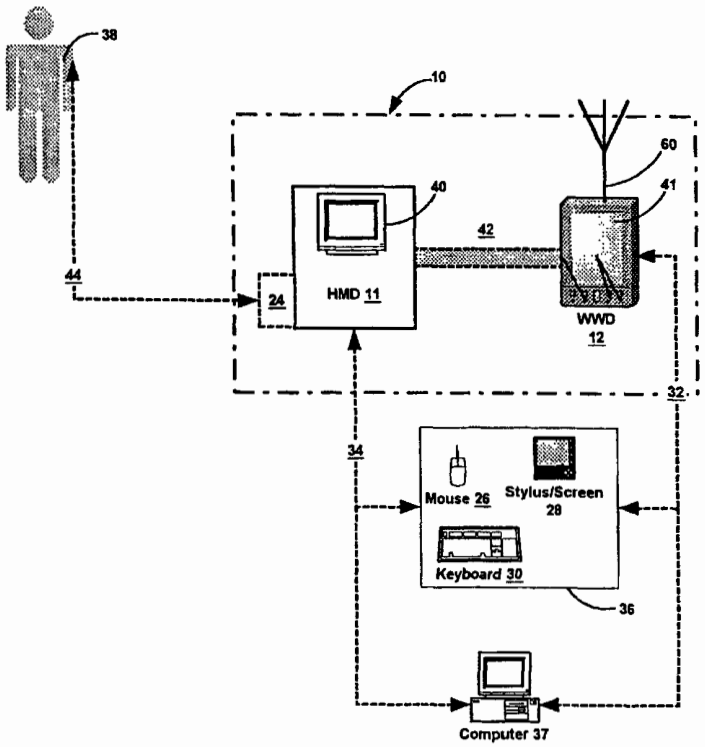

(57) Abstract: Embodiments of the invention provide a method and apparatus for a wireless health monitoring system for interactively monitoring a disease or health condition of a patient (38) by connecting an internet-enabled wireless web device ("WWD") (12) to a health monitoring device (11) which may be a medical device or other health related device such as an exercise machine. The WWD (12) may be connected to the health monitoring device directly by a wired connection (42) to a generic input/output device port of the WWD (12) using an optional adaptor if necessary. Alternatively, the WWD (12) may be wirelessly connected (16) to the health-monitoring device, such as via an infrared or radio frequency connection, including using protocols such as Bluetooth or 802.11. The wireless connection (16) may also employ an adaptor if necessary. The user may also input data to the WWD (12) manually, such as by a keypad, keyboard, stylus, or optionally by voice command (36). The health related data is transmitted from the WWD (12) to a server (37) using standard internet protocols. The server (37) calculates a response using a software program which may include an algorithm or artificial intelligence system, and may further provide for review by a physician or health specialist. The user may interact with the server (37). For example, the server (37) transmits a response to the WWD (12), and the user may answer the response or provide other information.

WO 01/45014 A1

TITLE OF THE INVENTION

METHOD AND APPARATUS FOR PATIENT MONITORING WITH WIRELESS INTERNET CONNECTIVITY

CROSS-REFERENCE TO RELATED APPLICATIONS

This application is a conversion of U.S. Provisional Patent Application Serial No. 60/172,486 filed December 17, 1999, entitled "Method and Apparatus for Health and Disease Management Combining Patient Data Monitoring with Wireless Internet Connectivity".

REFERENCE TO GOVERNMENTAL SUPPORT

(none)

REFERENCE TO MICROFICHE APPENDIX

(none)

FIELD OF THE INVENTION

The present invention relates to monitoring of living subjects, and more particularly to health-monitoring of persons where measured or input health data is communicated by a wireless device to and from a software application running on an internet-connected server and where the same may be studied and processed by the software application, a health professional, or the subject.

BACKGROUND OF THE INVENTION

Several attempts have been made in the past to achieve efficient interactive communication of medical or health information between a subject or patient and a reviewer or provider of that information. In particular, communication of consumer physiological information has been a subject of such attempts. It is noted that in this regard the "reviewer or provider of medical or health information" is understood to include not only a physician but also a software application or algorithm that may analyze the information.

Medical or health information has been made available on a CD-ROM accessible by a home computer system. This passive approach had certain disadvantages. First, although the personal computer is prevalent is the United States, it is generally too expensive for a consumer physiological monitoring system and there are many people who find it too complicated to set up and use for that purpose. High-risk, chronically ill patients, responsible for more than half of health care costs in the United States and forming the fastest growing segment of those requiring health care, are indeed the most likely not to be able to afford or use a system built around a personal computer. In addition, such systems are limited in their interactivity to the information stored on the CD.

Previous patents by the Inventor addressed both of these disadvantages, as well as the need to reduce health care costs through providing educational health care information and interactive physiological monitoring in the home environment by means of a user-friendly, interactive system (see, e.g., U.S. Patent Nos. 5,601,435, 6,144,837, and continuations thereof).

These previous patents were based on a video game

console, or a multimedia player using a conventional television screen as the display device to achieve a system which is simpler to use than systems based on a personal computer. An initial embodiment of the previous patents utilized a compact disc to provide interactive information for disease management.

Even with the advantages provided, these systems limited the user to location in which the device was located. Even where devices are portable, as in the case of a laptop computer with a modem, an ordinary POTS phone line must be found and used. Where the user's computer employs a broadband connection, such as DSL or satellite, the choices of location are even more limited.

Attempts have been made to remedy this deficiency. For example, many telemetry systems allow a "wireless" distance to be placed between a health measuring unit and a remote monitoring system. However, such systems are limited in their range.

Other systems have used cellular telephone technology to increase the wireless health monitoring range. However, these systems have several deficiencies, such as requiring significant modification of the mobile phone. For example, U.S. Patent No. 5,772,586, issued June 30, 1998 to Heinonon et al., discloses a method for monitoring the health of a patient. This system uses a specialized connection between the patient health measuring unit and the cellular phone, however. The patient health measuring unit is located in the battery space of the mobile phone and is connected to a communication bus of the mobile phone. Other systems have been proposed, but these suffer from similar deficiencies in that they are not designed to be used with "off-the-shelf" wireless devices or health measuring equipment.

The deployment of the above systems also currently lacks employment of full back-end server functionality with which to provide a wide range of interactive communication with the patient. Instead, such systems, if internet-enabled, are often limited to mere one-way non-interactive data transfer via a modem. While some systems are more enhanced, including that disclosed in U.S. Patent No. 5,357,427, issued October 18, 1994 to Langen, et al., and entitled "Remote Monitoring of High-Risk Patients using Artificial Intelligence", these systems are limited by the wired telecommunications infrastructure.

SUMMARY OF THE INVENTION

Embodiments of the present invention overcome one or more of the disadvantages of the prior art by providing a full-feature health-monitoring system that may wirelessly connect to a back-end server application via the internet. The invention allows wireless access to and from a wide variety of present medical or health-related instruments and devices, while maintaining the capability of connecting to future such devices.

In particular, the invention may be embodied in several systems. Two complementary such systems are described herein, although extensions to other such systems can be envisioned. First, an embodiment of the invention may be employed to manage the disease state or condition of a patient. In this embodiment, the patient may employ a health monitoring device ("HMD"), in particular a medical device, and a wireless connection provides data from the medical device for processing via the internet including a review by a physician or other health care professional if required.

In the second embodiment, a health or lifestyle

management plan may be implemented. Various health parameters, such as those relating to nutrition or exercise, may be entered into a health monitoring device, in this instance termed an "exercise machine", and the same may be wireless communicated to a server. An application may process and store the health parameters, and a health specialist may optionally review the same.

Wireless internet connectivity has many advantages. For example, in the first embodiment, a diabetic could connect a blood glucose meter to an internet-enabled wireless web device ("WWD") away from home and download data to a Diabetes Management Company's server and, in response, receive guidance displayed on the screen (or by voice) about choices for the next meal.

Alternatively, in the second embodiment, a person interested in tracking an exercise program may take the WWD to the local health club and attach the same to an exercise machine, send data output from various exercise machines over the Internet, and receive a personalized response from the server of a company specializing in Health & Lifestyle Management. The individual may input caloric content of foods eaten, and may further input caloric content of exercise performed. In this way, e.g., a person in a weight-loss program may see in great detail whether they are expending more calories in the form of exercise than the same individual is consuming in the form of food.

In general, in the health management embodiment, the system may be employed to monitor the physiologic status of a healthy subject while eating, exercising, or performing other activities. For clarity, such devices are termed herein "exercise machines". These may include an electronic body weight scale, a body fat gauge, biofeedback devices, physiotherapy or chiropractic

equipment, blood pressure recorders, or the like, or any type of exercise machine or monitor, including a heart rate monitor, treadmill, rowing machine, stepper, or the like.

In more detail, the present invention provides a method and system for assisting patients to manage a disease or maintain healthy lifestyle by collecting health-related data and providing information in response to those data by means of a WWD designed to display interactive information through a connection to the Internet. The present invention may be connected to various HMDs, both medical and exercise-related in nature, and may communicate information via a wireless connection such as a wireless Internet connection.

A major advantage of embodiments of the invention is that the same frees the patient from the constraints of wired systems. The same allows users with consumer "off-the-shelf" wireless devices to significantly extend the range of connectivity over that of wired computer, television, or even wireless telemetry systems.

In a first embodiment of the present invention, the WWD is a web-enabled cellular phone. Here it is noted that the term "web" or "internet" are used interchangeably to refer to the internet in general. In a second embodiment, the WWD is a palm, handheld, or laptop computer, or a PDA, equipped with a wireless modem. In a third embodiment, the WWD may be a hybrid device that combines the functions of a computer, PDA and telephone.

An adaptor is used if necessary to convert the output signal of the medical monitoring device to a suitable input signal for the WWD. The adaptor allows connection of the WWD to a medical device, exercise machine or other variety of health care equipment, and

the connection may be made via several techniques. As for wired techniques, a standard parallel bus or serial cable may be used if the input/output ports between the HMD and the WWD are appropriate. Otherwise, a suitable separate adaptor may be employed.

The connection may also be an input such as a disk drive or other media input for input of data, a USB port or phone jack or other such wired input, again employing an adaptor if required.

As for wireless techniques, infrared (IR), microwaves, radio frequency (RF), e.g., Bluetooth® or 802.11 protocols, optical techniques including lasers, and other such techniques may be used. The patient or subject may also input data manually, such as by a stylus, keypad, synchronization from a PC, or by various other techniques discussed below.

A major advantage of the invention is that by use of an optional adaptor, the system is compatible with current and prior HMDs as well as maintaining a capability of adapting to future such systems.

Other advantages of the invention may include one or more of the following. An embodiment of the invention may be used when a patient is traveling or otherwise away from their "wired" means of communication. The invention allows wireless health-monitoring to the level of accuracy previously achieved only by desktop so-called "wired" computer systems. The invention is protocol-independent.

The interaction between a WWD and a back-end server may provide a major additional advantage in certain embodiments of the invention. In particular, the relatively small amount of memory currently provided on a WWD as compared to a back-end server severely limits the functionality of applications running on the WWD,

especially in terms of computing capacity, processing power, and user interface. By providing significant application functionality on the back-end, less memory and processing capabilities become necessary on the WWD (i.e., on the "front-end"). Thus, memory may be used in the WWD for an enhanced user interface or for other purposes, according to the user requirements.

In a method according to an embodiment of the invention, the patient connects to a specific Internet site and a software program, resident on a remote server located on the Internet, downloads an interactive user interface for that patient and an application for the measurement of the physiological data. The software may also be downloaded to the WWD from a personal computer via a synchronization operation in known fashion. The software provides a personalized display for the user and configures the WWD to control and monitor devices connected via a generic input/output port to the WWD. The software may be designed to suit the constraints of the small display screens of WWDs. The software, as well as inputs from the patient or other inputs, can control the manner, content, and display of information presented to the patient, and measured or input data can be stored for review by a health care provider or by a software algorithm or application. The algorithm may be of varying complexity, from a simple program that merely acknowledges receipt of information to an artificial intelligence algorithm, such as an expert system, collaborative filtering system, rules based system, case-based reasoning system, or other such artificial intelligence application.

Further information may be provided to or from the patient, including information entered manually. The patient may input this information via a personal

computer, which then may download the input information to the WWD via a synchronization operation using standard protocols, such as those for Palm PDA devices.

The user may also input supplemental information via a PC connected independent to the server via the internet. Such supplemental information may include data that is difficult or inconvenient to input on the WWD. In this way, the patient may be afforded a more convenient environment in which to manipulate data to supplement the data input to the WWD. The deployment of voice processing technology may be used to enable an even more convenient user interface: i.e., one to which patients can talk.

In all of these respects, the portable aspect of the WWD is important: to wit, the user may conveniently carry the WWD on their person wherever they may go, allowing data entry at the time needed.

Other aspects, features, and advantages will be apparent from the summary above, as well as from the description that follows, including the figures and the claims.

BRIEF DESCRIPTION OF THE DRAWINGS

FIG. 1 illustrates a general embodiment of a wireless health-monitoring system according to the present invention;

FIG. 2 illustrates an embodiment of a wireless health-monitoring apparatus according to the present invention, showing the system of FIG. 1 up to a point of a wireless antenna;

FIG. 3 illustrates an embodiment of a back end of a health-monitoring system according to the present invention;

FIG. 4 illustrates a data flow diagram according to an embodiment of the present invention;

FIG. 5 illustrates an embodiment of a method of use for a wireless application and a server application according to the present invention, in which the same is implemented for disease and patient management;

FIG. 6 illustrates an embodiment of a method of use for a wireless application and a server application according to the present invention, in which the same is implemented for health management;

FIG. 7 illustrates an embodiment of a wired connection between a HMD and a WWD, also showing an optional adaptor; and

FIG. 8 illustrates an embodiment of a wireless connection between a HMD and a WWD, also showing an optional adaptor.

DETAILED DESCRIPTION OF THE PREFERRED EMBODIMENTS

Various acronyms are used for clarity herein. Definitions are given below.

The term "HMD" may encompass not only devices with physiologic sensors but also devices with a keypad, keyboard, mouse, pointer, pressure sensor, or other such inputs that the patient or user may employ to perform data entry of the desired parameters. In general, HMDs include some means for determining a health parameter.

In a disease management embodiment, an HMD may be a blood glucose monitor, a blood pressure monitor, an ambulatory ECG recorder, a respiratory monitor, a temperature or heart rate monitor, and so on.

In a healthy lifestyle management embodiment, an HMD may be an exercise machine, including treadmills, rowers, steppers, exercise cycles, or other aerobic or anaerobic

exercisers, or a monitor, include monitors for temperature, heart rate, blood pressure, amount of work or rate of work performed, etc.

The term "subject" as used herein primarily indicates a human subject. The same may be a medical patient under physician care, a person interested in maintaining health via accurate recording of nutrition and exercise, and so on. The term "user" is generally used to refer to the user of the device, which may be synonymous with the subject or may alternatively be a caregiver of the subject, etc. The term "patient" is used, in addition to a person under the care of a physician, to also refer to a "normal" or healthy individual who is interested in maintaining a healthy physiologic balance.

The term "signal communication" is used to mean any type of connection between components where the connection is, e.g., electromagnetic, and where the connection allows information to be passed from one component to another. This term may be used in a similar fashion as "coupled", "connected", "information communication", "data communication", etc. The following are examples of signal communication schemes. As for wired techniques, a standard bus or serial cable may be used if the input/output ports are compatible and an optional adaptor may be employed if they are not. As for wireless techniques, IR, microwaves, RF, e.g., Bluetooth® or 802.11 protocols, optical techniques including lasers, and other such techniques may be used. The patient or subject may even input data manually, such as by a stylus or keypad or by various other techniques discussed above and below.

The term "generic input/output port" is used to mean any type of convention, standard, universal, stock,

consumer, or "off-the-shelf" type of port for data input and output. These may include both wired and wireless ports. A further description is given below.

Various embodiments of the invention are now described in more detail.

Referring to FIG. 1, a system of the present invention is shown for monitoring health data from a patient or subject 38. The system includes a wireless health-monitoring apparatus ("WHMA") 10 described in further detail below. WHMA 10 is linked in a wireless fashion to a wireless connection point of presence ("POP") 19, the same including at least a base station antenna 15 coupled to a server 17. Server 17 is in turn connected to the wired, or even a wireless (not shown) Internet 21, which may include the World Wide Web.

Referring to FIG. 2, an first embodiment of WHMA 10 is shown. WHMA 10 includes an HMD 11, which may include an optional monitor screen 40, coupled via an optional adaptor 42 to a WWD 12. WWD 12 connects wirelessly via an antenna 60 to base station 15 (see FIG. 1). One function of WWD 12 is to provide the user interface; other functions are described below.

As noted above, HMD 11 may include a physiologic sensor 24 or may include a manual system 36 for input of physiologic data via a connection 34. Manual system 36 may also be used to input data directly into WWD 12 via a connection 32. Manual system 36 may include, e.g., a keyboard 30, a mouse 26, a pen-type device 28, and may also employ a separate monitor (not shown). Of course, the user may also view information on monitor 40 or on a screen 41 of WWD 12. In many embodiments, the stylus-based system employed by many current PDA's, such as the Palm®, may be preferred for such manual data input.

Data may also be input via entry on a computer 37. This data may then be synchronized to WWD 12 in known fashion. Alternatively, computer 37, or another computer (see computer 37' in FIG. 4) may be used to connect to a server using the wired internet. This use may be particularly advantageous when entering a large amount of data, such as a patient's medical history. As noted above, in this way the patient may be afforded a more convenient environment in which to manipulate data to supplement the data input to the WWD.

It will be clear to one of skill in the art given this teaching that cable 32, as well as cables 34 and 44, may be replaced with wireless circuitry to communicate signals wirelessly.

For medical devices and applications, physiologic sensor 24 may include, e.g., a sensor appropriate for measuring blood glucose levels, blood pressure, heart rate, or any other desired parameter as required by the physician. Sensor 24 may connect via an optional cable 44 to subject 38. Alternatively, sensor 24 may be distal of HMD 11, i.e., at or within subject 38. In other words, if cable 44 is employed, sensor 24 may be proximal or distal of cable 44. If a wireless communications capability is added, sensor 24 need not physically connect with HMD 11 or WWD 12 at all. That is, the same may measure a health parameter and may communicate the same to wireless health-monitoring apparatus 10 wirelessly. The short range wireless communications schemes which may be employed include infrared, radio frequency including Bluetooth or 802.11, or other such schemes.

As examples of sensor types, to measure blood glucose levels, sensor 24 may be a sensor that accepts a drop of blood, e.g., via a finger-prick. To measure

heart rate, sensor 24 may be placed via an adhesive sensor disposed on the chest. Other health monitors may also be employed so long as the measured data may either be transferred to WWD 12, e.g., via optional adaptor 42, described in further detail below, or by being read by a user, e.g., from a display, and manually input to WWD 12. Alternatively, the measured data may be transferred to WWD 12 via wireless communication schemes, such as RF includes Bluetooth® or 802.11, infrared, optical, microwaves, etc., directly from sensor 24 or from HMD 11 as described in greater detail below.

The user, who may or may not be the same person as subject 38, may input data to WWD 12 from history or experience. For example, in a health or exercise device, if subject 38 consumes a known number of calories, this information may be entered via manual system 36 directly into WWD 12 or into HMD 11. Further, the user, the subject, and the sensor are not necessarily the sole sources of information. Data stored on the server, or on a separate server operated for health management may also be employed to result in a health benefit to subject 38.

Referring to FIG. 3, WHMA 10 is shown communicating wirelessly with the Internet. In doing so, WHMA 10 generally sends a wireless signal to a base station 14 (in known fashion) that is connected to a server 18 that is in signal communication (in known fashion) with the internet. Server 18 communicates via a protocol (in known fashion) to Internet 20, which also communicates via a protocol (in known fashion) to a server 22 running an application 62. Server 22 may be accessed (in known fashion) by a client computer 44 through a connection 64.

As noted, the protocols for data communication are known. However, they currently vary amongst known techniques. The present invention is not limited to any

particular protocols, and may be implemented in any languages supported by the WWD and server. Of course, as computing capabilities continue to increase, it is expected that the capabilities of WHMA 10, servers 18 and 22, as well as application 62 and client 44, and other components, will correspondingly increase.

Application 62 running on server 22 may interact with WHMA 10 in a number of ways. Referring to FIG. 4, WHMA 10 is shown in signal communication with server 22 via a connection 72. Connection 72 schematically represents the wireless Internet connection and intervening pathways. WHMA 10 includes an application that may be viewed as having two components: a base wireless or device application 70 and an application presentation layer or user interface 68. User interface 68 is employed to, e.g., present a menu of options to the user, to allow the user to choose inputs, and to generally operate the device. User interface 68 may vary widely in sophistication, e.g., from a simple data entry field to a full graphical user interface. These applications may accept as inputs data from a sensor 24 as well as from a manual input 36.

Server 22 has a base server application 62 with which the same calculates or provides a response based at least in part on data from WHMA 10. Application 62 may include an algorithm 63 for analyzing data from the HMD, and either application 62 or algorithm 63 may optionally access data from an external data source 74 and may further consult an artificial intelligence system 76.

External data source 74 may be a memory or disk or other such storage that stores health data, such as healthy and unhealthy weight/height ranges, healthy and unhealthy cholesterol counts, the patient's or subject's prior medical or health history, healthy and unhealthy

blood pressure values, information corresponding to the caloric and other nutritional content of foods, information corresponding to the caloric expenditure values of various exercises, algorithms for calculating various health parameters, etc. In general, any data that may benefit the health of a subject or patient may be stored in external data source 74. External data source 74 may also include online access of health information from external web sites, ftp servers, or other sources.

Due to the current relatively small amount of memory and storage available on current WWDs, such external application processing as by application 62 and external data storage as by external data 74 may be particularly important.

As noted, application 62 or algorithm 63 may also consult AI system 76 for suggestions as to health benefits. AI system 76 may even interact with external data source 74 to extract useful information from the same. AI system 76 may employ, e.g., case-based reasoning, rules-based systems, collaborative filtering, neural networks, expert systems, or other such systems as are known.

It should also be noted that each of application 62, algorithm 63, external data source 74, or AI system 76, may physically reside on more than one server, e.g., on an array of servers for, e.g., storage or multiple processing purposes. Each of application 62, algorithm 63, external data source 74, or AI system 76, or combinations of each, may also respectively reside on different servers.

The extent to which server application 62 interacts with wireless application 70 depends on the use to which the system is put. For example, in a less interactive

embodiment, device application 70 may act to measure a diabetic patient's blood glucose level and report the same to server application 62. In this case, a physician may simply review the measured value and send the patient an email reporting that the value is acceptable or not. In a highly interactive embodiment, a patient may have numerous HMDs 11 connected via optional adaptors to a WWD 12, and wireless application 70 may correspondingly send a large amount of health data to server application 62. The physician, accessing server application 62, may in turn send detailed care plans to a caregiver via connection 72. The received data may be analyzed using algorithm 63, external data source 74, and AI system 76. In this sense, the two applications may be highly interactive.

It is noted that an Application Service Provider (ASP) may operate application 62. That is, application 62 may be leased by an ASP to the health care provider, and the ASP may perform all necessary upgrades and maintenance to application 62 and its associated components.

To initialize the system, the program starts and a wireless application is loaded into the WWD. The loading of the wireless application may occur via synchronization from a desktop or via downloading from a server over the internet. The server application may be loaded into an appropriate internet-connected server. Subject data may be loaded into the WWD or into the server. In the latter case, the subject information may later be transferred to the WWD or transferred to the server from the WWD, as called for by the application. The initialization scheme then ends.

The wireless application may access the server and server application, or vice-versa, as determined by the

respective program instructions. Examples are now given for (1) a system of disease and patient management and (2) a system for health management employing an exercise machine.

EXAMPLE EMPLOYING SYSTEM FOR DISEASE MANAGEMENT

Referring to FIG. 5, an example is given for a system of disease and patient management. In this figure, as well as in FIG. 6, boxes in dotted lines may generally be considered optional.

In FIG. 5, a medical device may determine health parameters and an optional physician review is provided. Health parameters may also be determined by user manual input.

The program is started (step 142) and a sensor measures a health parameter (step 116). The sensor may send the parameter to a medical device (step 118). The medical device then sends the parameter to the WWD (step 120). The WWD then wirelessly communicates the parameter to the application server (step 122), e.g., via the wireless web. The application server processes the parameter (step 124), and calculates or provides a response (step 126) based at least in part on the parameter. The application server may optionally employ algorithm 63 (step 125), external data (step 132) or an AI system (step 134) in the calculation. The application server then sends the response to the WWD (step 128), where the response is displayed (step 130).

It should be noted that the term "response" here is used generally may simply be an acknowledgement that the parameter was received by the application server. The term "calculate" is also used generally, and may entail a simple calculation as well as a complex one. A result may, e.g., be the result of a calculation.

As noted above, the sensor may connect to any type of medical device or other such device in which information pertaining to a patient's disease or condition may be ascertained. The parameter may be any value corresponding to such information.

The method may also use a manual input as shown. In this case, after the start (step 142) of the application, the user may interact with the WWD (step 140). The interact may be a data input, a command to read data from a medical device, a response to a physician question or statement, an acknowledgement of physician notification, etc. Calculations by the application server may further take into account supplemental data sent by the user to the server, e.g., in a wired fashion directly over the internet (step 141).

FIG. 5 also shows a physician review and notification. In this option, the responses are displayed on a client computer (step 136) in signal communication with the application server. A physician may then review the response on the client computer, and notify the patient of the responses (step 138). For example, the physician may notify the patient of positive or negative responses. Of course, it should be noted that the "client computer" may simply be a pager, PDA, WWD, or other such device, as well as a more typical desktop or laptop computer.

In one implementation, a diabetic may keep a database on a server of a dietary history and a blood glucose history. With this data at-hand wirelessly, the diabetic may choose whether to eat a particular food by entering nutritional information about the food into a WWD, transmitting the same wirelessly to the server, and receiving a recommendation from the server. The recommendation may be based on the food and also on data

or information that had previously been transmitted wirelessly, including data from a blood glucose monitor, data input manually, if any, as well as data from algorithm 63, external data source 74, and AI system 76.

EXAMPLE EMPLOYING SYSTEM FOR HEALTH MANAGEMENT USING A GENERAL EXERCISE MACHINE

Referring to FIG. 6, an example is given for a system of health, nutrition, and/or exercise management. In this example, the HMD is an exercise machine as that termed has been defined above.

The program is started (step 242) and a sensor measures a health parameter (step 216), where the health parameter corresponds to health, fitness, nutrition, exercise, etc. The sensor may send the parameter to the exercise machine (step 218). It is understood here that the "sensor" may be, e.g., a blood pressure monitor, but may also be a simple device connected to an aerobic exerciser that tracks miles ran, work performed, etc.

The exercise machine then sends the parameter to the WWD (step 220). The WWD wirelessly communicates the parameter to the application server (step 222), e.g., via the wireless web.

An alternative and complementary way of entering the parameter is by user input (step 248). For example, the user may enter the parameter into the exercise machine or into the WWD. This parameter may correspond to an amount of exercise performed, an amount of food consumed, etc.

Calculations by the application server may also take into account supplemental data sent by the user to the server, e.g., in a wired fashion directly over the internet (step 241).

The application server processes the parameter (step 224 and optionally step 225), and calculates a response

(step 226) based at least in part on the parameter. The application server may optionally employ external data (step 232) or an AI system (step 234) in the calculation. The application server then sends the response to the WWD (step 228), where the response is displayed.

The same definitional statements regarding the terms "response", "calculate", "sensor", etc., as given before, apply in this embodiment as well.

As an optional step, a health specialist may notify the patient or subject of the response (step 238) after having the same displayed on their client computer (step 236). The health specialist may be replaced in this example by an application that may also include an algorithm.

ADAPTOR HARDWARE

A description is given below of a particular type of adaptor hardware. As noted above, the adaptor may optionally be used to connect a HMD to a WWD.

In general, a connection is necessary between a HMD 11 and a WWD. The nature of this connection may vary. For example, the connection may be wired or wireless. For wired systems, the connection may be direct or an adaptor may be employed, either on one or both ends of the direct wired connection, to adapt the signal appropriately. In the same way, for wireless systems, the connection may be direct, if both HMD and WWD employ the same wireless protocol, or an adaptor may be involved to modify the signal of one or both devices. These connections, all of which are encompassed by the present invention, are discussed in more detail below.

Referring to FIG. 7, an embodiment of the connection is shown. In this figure, a hardware (or "wired") connection is shown, i.e., an adaptor 168, disposed

between a HMD 160 and a WWD 162. In most circumstances, it is assumed that the varieties of HMDs will vary more widely than the varieties of WWDs. Accordingly, HMD 160 will likely have one of a variety of types of connectors for input/output purposes, here shown as a connector 164. Connector 164 mates with a connector 172 of adaptor 168. At another point on adaptor 168 is a connector 172' for connecting to a generic input/output port 164' on WWD 162. A cable 170 is disposed between the two connectors, cable 170 capable of including adaptor circuitry if desired.

Of course, the use and structure of adaptor 168, between HMD 160 and WWD 162, depends on factors such as the prevalence of an industry standard for such communications. In other words, if the output of HMD 160 is readily acceptable to WWD 162, then the same may be directly connected or may be connected via a simple cable, the same basically extending from pin-to-pin. For example, a standard parallel bus or serial cable may be used if the input/output ports between the HMD and the WWD, which may be, e.g., RS232, are compatible. Otherwise, a suitable adaptor circuit as noted above may be employed. The connection may also be an input such as a disk drive or other media input for input of data, a USB port or phone jack or other such wired input, again employing an adaptor circuit if required.

It is noted as exemplary that several of the most prevalent PDA's currently employs the Palm® operating system. The same may be connected to the Internet in a wireless fashion using one of several available networks. In one version of a Palm® device, a 10-pin RS-232 serial port is provided. In this version of the Palm®, port 164' can be used to communicate with HMD 160 and

connector 164 via the optional adaptor 168 according to the following pin-out:

Pin	Name	Function
1	DTR	Data Terminal Ready signal
2	VCC	3.3 Volts
3	RD (in)	Receive data
4	RTS (out)	Request to send
5	TD (out)	Transmit data
6	CTS (in)	Clear to send
7	GP1 (in)	Interrupt line
8	GP2 (in)	modem sync
9	unused	unused
10	GND	signal ground

On the other side of optional adaptor 168, i.e., HMD 160, connector 164 may vary more widely. It is noted that certain exercise machines are equipped with DB9 or DB25 RS232 serial connectors. In this case, the pin-outs are (for a DB25):

Pin	Name	Function
1	-	Protective/shielded ground
2	TD	Transmit Data (a.k.a TxD, Tx)
3	RD	Receive Data (a.k.a RxD, Rx)
4	RTS	Request To Send
5	CTS	Clear To Send
6	DSR	Data Set Ready
7	SGND	Signal Ground
8	CD	Carrier Detect (a.k.a DCD)
9		Reserved for data set testing
10		Reserved for data set testing
11		Unassigned
12	SDCD	Secondary Carrier Detect
13	SCTS	Secondary Clear to send
14	STD	Secondary Transmit Data
15	DB	Transmit Clock (a.k.a TCLK, TxCLK)
16	SRD	Secondary Receive Data

17	DD	Receive Clock (a.k.a. RCLK)
18	LL	Local Loopback
19	SRTS	Secondary Request to Send
20	DTR	Data Terminal Ready
21	RL/SQ	Signal Quality Detector/Remote loopback
22	RI	Ring Indicator (DCE raises when incoming call detected used for auto answer applications)
23	CH/CI	Signal Rate selector
24	DA	Auxiliary Clock (a.k.a. ACLK)
25		Unassigned

A connection may simply be made by providing optional adaptor 168 with adaptor circuitry, such as within cable 170 or within a circuit box therein (not shown), so as to match up the appropriate or complementary pins.

In other embodiments, such as for devices connected to proprietary connectors, a less standard and perhaps proprietary pin-out may be required.

Referring to FIG. 8, an embodiment of a wireless implementation of the WHMA 10 is shown. In FIG. 8, a wireless connection is shown between HMD 160 and WWD 162. HMD 160 may have an integral wireless modulator/demodulator disposed within (not shown). More likely, however, is that HMD 160 has an adaptor 154 connectable thereto which performs these functions. Adaptor 154 may plug into a connector 165 on HMD 160. WWD 162 may have an integral wireless modulator/demodulator (not shown), although an adaptor can also be used in this context. If an adaptor is used, the same may plug into generic input/output port 164'.

While the device shown in FIG. 8 is described in the context of general wireless communications, various protocols may be employed. For radio frequency

communications, protocols such as Bluetooth® or 802.11 may be advantageously employed. Other techniques employing a similar configuration include those employing IR, microwaves, optical techniques including lasers, and so on.

It should be understood that the above is merely exemplary, and that the form of the adaptor may vary widely between HMDs and WWDs.

It will be understood that the above description of a "Method and Apparatus for Health and Disease Management Combining Patient Data Monitoring with Wireless Internet Connectivity" has been with respect to particular embodiments of the invention. While this description is fully capable of attaining the objects of the invention, it is understood that the same is merely representative of the broad scope of the invention envisioned, and that numerous variations of the above embodiments may be known or may become known or are obvious or may become obvious to one of ordinary skill in the art, and these variations are fully within the broad scope of the invention. For example, while certain wireless technologies have been described herein, other such wireless technologies may also be employed. Furthermore, while various types of medical devices have been mentioned, numerous other types may also be used in the embodiments of the invention, including pulse oximeters, syringe drivers, infusion pumps, spirometers, ventilators, anesthesia monitors, and so on. Accordingly, the scope of the invention is to be limited only by the claims appended hereto, and equivalents thereof. In these claims, a reference to an element in the singular is not intended to mean "one and only one" unless explicitly stated. Rather, the same is intended to mean "one or more". All structural and functional equivalents to the elements of the above-

described preferred embodiment that are known or later come to be known to those of ordinary skill in the art are expressly incorporated herein by reference and are intended to be encompassed by the present claims. Moreover, it is not necessary for a device or method to address each and every problem sought to be solved by the present invention, for it to be encompassed by the present claims. Furthermore, no element, component, or method step in the present invention is intended to be dedicated to the public regardless of whether the element, component, or method step is explicitly recited in the claims. No claim element herein is to be construed under the provisions of 35 U.S.C. §§112, ¶6, unless the element is expressly recited using the phrase "means for".

What Is Claimed Is:

CLAIMS

1. A wireless health-monitoring system for monitoring a state or condition of a patient, comprising:

An internet-enabled wireless web device, the internet-enabled wireless web device including a first communications port having a generic input/output port and a second communications port having a circuit for wireless communications with a network, the internet-enabled wireless web device configured to store:

a health parameter, the health parameter corresponding to a state or condition of a patient and determined by a health parameter determining means:

A device application; and

a user interface; and

A server application, residing on a computer readable medium and disposed on a server in communication with the wireless network, for causing the server to:

Receive the determined health parameter;

Calculate a response based in part on the determined health parameter; and

Provide the response to the internet-enabled wireless web device.

2. The system of claim 1, wherein the generic input/output port includes a port for wireless communications.

3. The system of claim 2, wherein a wireless communications scheme employed by the generic input/output port uses radio frequency.

4. The system of claim 3, wherein the wireless communications scheme employed uses the Bluetooth

protocol.

5. The system of claim 3, wherein the wireless communications scheme employed uses the 802.11 protocol.

6. The system of claim 2, wherein the wireless communications scheme employed uses infrared.

7. The system of claim 1, wherein the generic input/output port includes a port for serial communications.

8. The system of claim 1, wherein the generic input/output port includes a port for parallel communications.

9. The system of claim 1, wherein the internet-enabled wireless web device is selected from the group consisting of: an internet-enabled cellular phone; a handheld, palm, or laptop computer having an optional implemented or integral wireless capability; and a hybrid device of a handheld computer and cellular telephone.

10. The system of claim 9, wherein the internet-enabled wireless web device is a personal digital assistant with a wireless capability.

11. The system of claim 1, further comprising a health device, the health device including the health parameter determining means, the health device further comprising an output port to deliver data corresponding to the health parameter.

12. The system of claim 11, further comprising an

adaptor for connection to the output port of the health device, the adaptor having an output to deliver data corresponding to the health parameter.

13. The system of claim 12, wherein the adaptor output and the generic input/output port communicate via a wired link.

14. The system of claim 12, wherein the adaptor output and the generic input/output port communicate via a wireless link.

15. The system of claim 14, wherein a wireless communications scheme employed by the generic input/output port and the adaptor output uses radio frequency.

16. The system of claim 15, wherein the wireless communications scheme employed uses the Bluetooth protocol or the 802.11 protocol.

17. The system of claim 14, wherein a wireless communications scheme employed by the generic input/output port and the adaptor output uses infrared.

18. The system of claim 11, wherein the output port of the health device and the generic input/output port communicate via a wired link.

19. The system of claim 11, wherein the output port of the health device and the generic input/output port communicate via a wireless link.

20. The system of claim 19, wherein a wireless communications scheme employed by the generic input/output port and the output of the health device uses radio frequency.

21. The system of claim 20, wherein the wireless communications scheme employed uses the Bluetooth protocol or the 802.11 protocol.

22. The system of claim 19, wherein a wireless communications scheme employed by the generic input/output port and the output of the health device uses infrared.

23. The system of claim 11, wherein the health device output is in signal communication with the generic input/output port of the internet-enabled wireless web device via a medium selected from the group consisting of: a storage device including a disk or tape, a USB connection, a phone connection, microwaves, optical techniques including lasers, manual input by a stylus, keypad, synchronization from a PC, and combinations thereof.

24. The system of claim 12, wherein the adaptor output is in signal communication with the generic input/output port of the internet-enabled wireless web device via a medium selected from the group consisting of: a storage device including a disk or tape, a USB connection, a phone connection, microwaves, optical techniques including lasers, manual input by a stylus, keypad, synchronization from a PC, and combinations thereof.

25. The system of claim 1, wherein the server application is provided and administered by an Application Service Provider.

26. The system of claim 1, wherein the server application is an application employing a plurality of nodes, and wherein the device application acts as a node of the server application.

27. The system of claim 26, wherein the node is a node of a system selected from the group consisting of: an algorithm, an artificial intelligence system, an expert system, a rules-based system, a case-based reasoning system, and combinations thereof.

28. The system of claim 11, further comprising a sensor for measuring the health parameter, the sensor having an output coupled to the health device.

29. The system of claim 28, wherein the health device is a medical device, and wherein the sensor is for measuring a health parameter selected from the group consisting of: body weight, blood glucose level, heart rate, blood pressure, temperature, metabolic rate, respiratory rate, cholesterol, and combinations thereof.

30. The system of claim 1, further comprising a manual system for input of the health parameter, the manual system in signal communication with the internet-enabled wireless web device.

31. The system of claim 1, further comprising a computer for input of supplemental health data, the computer in signal communication with the internet-enabled wireless web device or the server.

32. The system of claim 28, wherein the health device is an exercise machine, and wherein the sensor is for measuring a health parameter selected from the group consisting of: body weight, heart rate, blood pressure, temperature, metabolic rate, amount of work performed, rate of work performed, cholesterol, and combinations thereof.

33. The system of claim 28, wherein the health device is an exercise machine, and wherein the exercise machine is selected from the group consisting of aerobic exercisers and anaerobic exercisers.

34. The system of claim 33, wherein the exercise machine is selected from the group consisting of treadmills, exercise cycles, rowers, and steppers.

35. The system of claim 34, further comprising a computer, and wherein the computer is for entering supplemental health information.

36. A method of wirelessly monitoring the state or condition of a patient, comprising:
    Providing a user interface and application to an internet-enabled wireless web device;
    Entering a health parameter to the internet-enabled wireless web device via a generic input/output port, the health parameter corresponding to a state or condition of a patient;
    Wirelessly transmitting the health parameter to a server;
    Receiving the determined health parameter at the server;
    Calculating a response based on the determined health parameter; and
    Delivering the response to the internet-enabled wireless web device.

37. The method of claim 36, wherein the entering also includes entering a health parameter manually.

38. The method of claim 36, wherein the generic input/output port is in signal communication with a health device.

39. The method of claim 38, wherein the generic input/output port is in signal communication with the health device via a wired connection.

40. The method of claim 38, wherein the generic input/output port is in signal communication with the health device via a wireless connection.

41. The method of claim 40, further comprising transferring information between the health device and the generic input/output port using a radio frequency transmission scheme.

42. The method of claim 41, wherein the radio frequency transmission scheme is selected from the Bluetooth protocol or the 802.11 protocol.

43. The method of claim 40, further comprising transferring information between the health device and the generic input/output port using an infrared transmissions scheme.

44. The method of claim 38, wherein the health device is a medical device, and wherein the medical device is selected from the group consisting of: blood glucose monitors, body weight scales, blood pressure monitors, heart rate monitors, respiratory monitors, temperature monitors, ECG monitors, and combinations thereof.

45. The method of claim 38, further comprising transferring information between the health device and the generic input/output port using an adaptor.

46. The method of claim 36, further comprising entering supplemental health data into the server using a computer.

47. The method of claim 38, wherein the health device is an exercise machine, and wherein the exercise machine is selected from the group consisting of: treadmills, rowers, steppers, exercise cycles, other

aerobic exercisers, body weight scales, blood pressure monitors, heart rate monitors, temperature monitors, and combinations thereof.

48. A computer program, residing on a computer-readable medium, containing instructions for causing a server in signal communication with the internet to:

Provide a device application and user interface to an internet-enabled wireless web device, wherein the user interface or device application contains instructions for causing the internet-enabled wireless web device to receive data from a generic input/output port;

Receive a signal corresponding to a health parameter from the internet-enabled wireless web device, the health parameter corresponding to a state or condition of a patient;

Calculate a response based at least in part on the received signal;

Communicate the response to the internet-enabled wireless web device; and

Display features according to the response.

49. The computer program of claim 48, wherein the user interface or device application contains instructions for causing the internet-enabled wireless web device to receive data from the generic input/output port wherein the generic input/output port is in signal communication with a medical device that is selected from the group consisting of: blood glucose monitors, blood pressure monitors, body weight scales, heart rate monitors, respiratory monitors, temperature monitors, ECG monitors, and combinations thereof.

50. The computer program of claim 48, wherein the user interface or device application contains instructions for causing the internet-enabled wireless web device to receive data from the generic input/output port wherein the generic input/output port is in signal communication with an exercise machine that is selected from the group consisting of: treadmills, exercise cycles, steppers, rowers other aerobic exercisers, blood pressure monitors, body weight scales, heart rate monitors, temperature monitors, and combinations thereof.

51. A internet-enabled wireless web device for monitoring health, the internet-enabled wireless web device connected in wireless communication with a server running an application, comprising: A web-enabled cellular phone running an application, the application functioning to accept inputs from a first communications port and a second communications port, the first communications port including a generic input/output port and the second communications port including a wireless link to a network, the generic input/output port for receipt of a health parameter, the health parameter corresponding to a patient's disease state or condition, or to a patient's health, nutrition, fitness or exercise state or condition.

52. A internet-enabled wireless web device for monitoring health, the internet-enabled wireless web device connected in wireless communication with a server running an application, comprising: A personal digital assistant with wireless connectivity running an application, the application functioning to accept inputs from a first communications port and a second

communications port, the first communications port including a generic input/output port and the second communications port including a wireless link to a network, the generic input/output port for receipt of a health parameter, the health parameter corresponding to a patient's disease state or condition, or to a patient's health, nutrition, fitness or exercise state or condition.

53. A internet-enabled wireless web device for monitoring health, the internet-enabled wireless web device connected in wireless communication with a server running an application, comprising:

A hybrid handheld computer and cellular telephone combination running an application, the application functioning to accept inputs from a first communications port and a second communications port, the first communications port including a generic input/output port and the second communications port including a wireless link to a network, the generic input/output port for receipt of a health parameter, the health parameter corresponding to a patient's disease state or condition, or to a patient's health, nutrition, fitness or exercise state or condition.

54. The system of one of claims 51-53, wherein the generic input/output port employs a wireless communications scheme, and wherein the wireless communications scheme employed uses radio frequency.

55. The system of one of claims 51-53, wherein the generic input/output port employs a wireless communications scheme, and wherein the wireless communications scheme employed uses the Bluetooth protocol.

56. The system of one of claims 51-53, wherein the generic input/output port employs a wireless communications scheme, and wherein the wireless communications scheme employed uses the 802.11 protocol.

57. The system of one of claims 51-53, wherein the generic input/output port employs a wireless communications scheme, and wherein the wireless communications scheme employed uses infrared.

58. The system of one of claims 51-53, wherein the generic input/output port includes a port for serial communications.

59. The system of one of claims 51-53, wherein the generic input/output port includes a port for parallel communications.

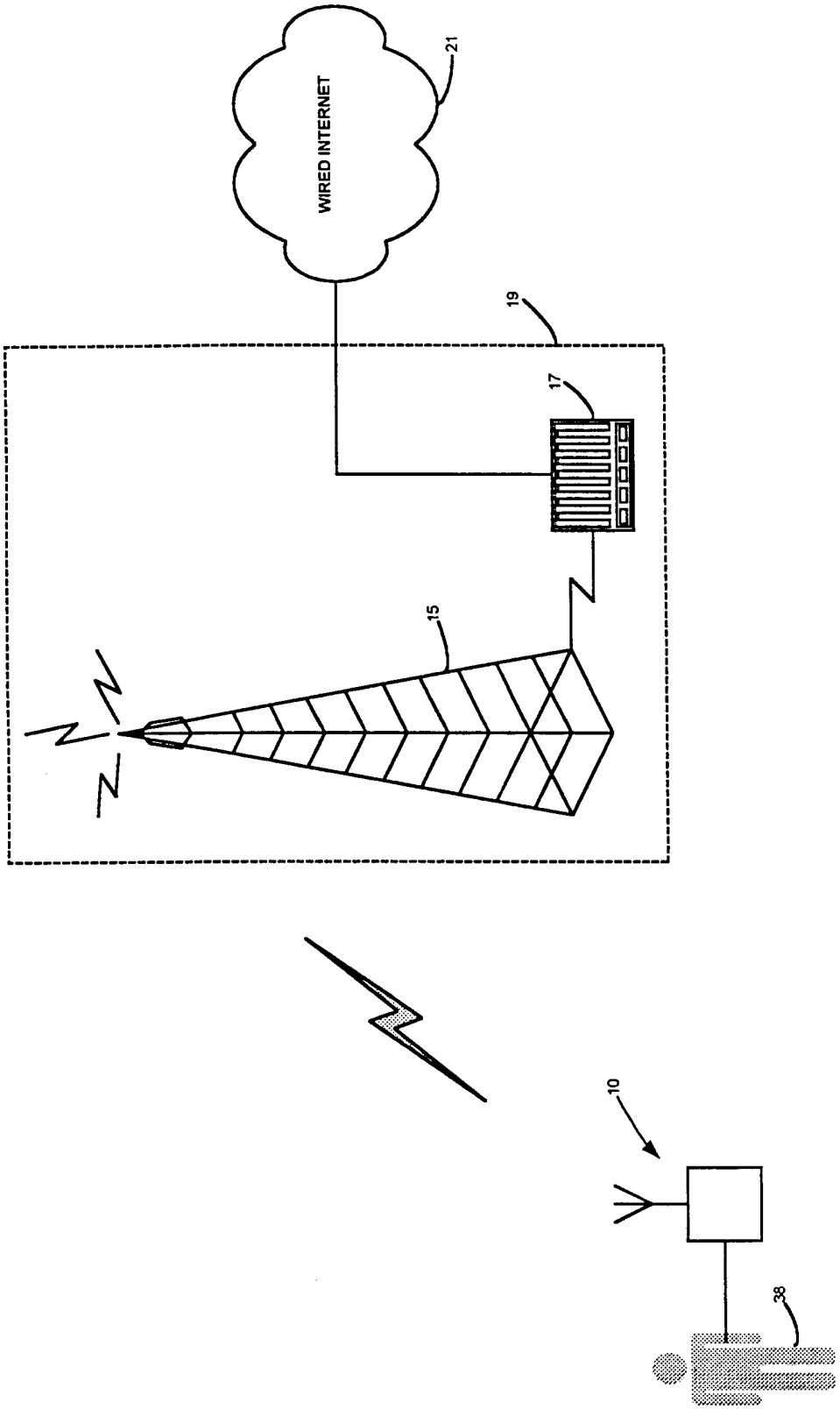

FIG. 1

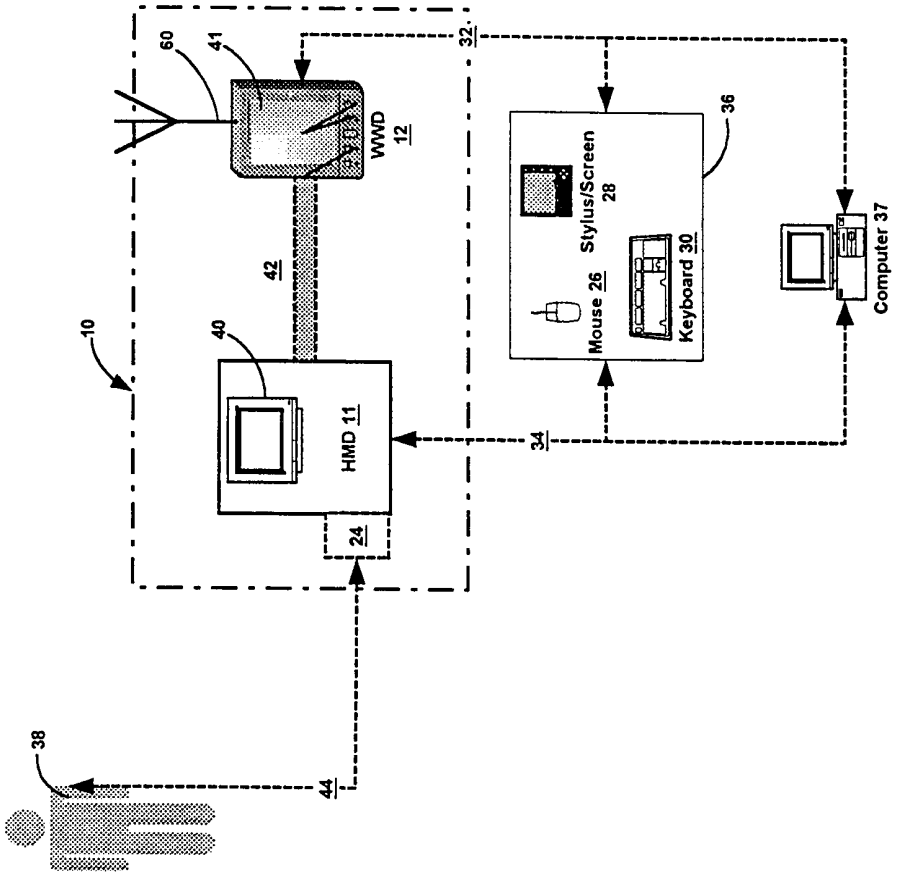
10
60
41
WWD
12
42
40
HMD 11
24
32
34
36
Stylus/Screen
28
Mouse 26
Keyboard 30
Computer 37
38
44

FIG. 2

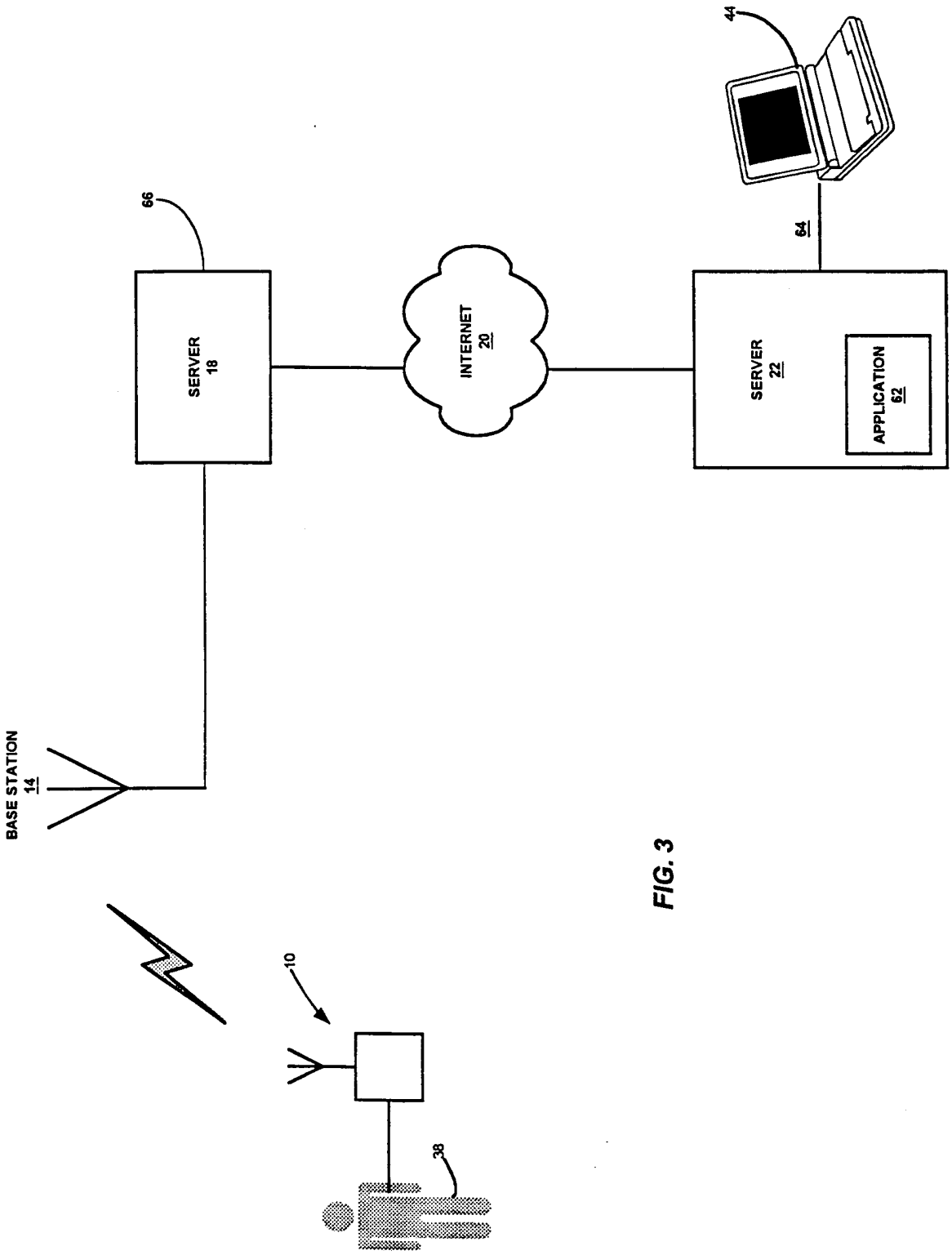
44
64
66
SERVER
18
INTERNET
20
SERVER
22
APPLICATION
62
BASE STATION
14
10
38

FIG. 3

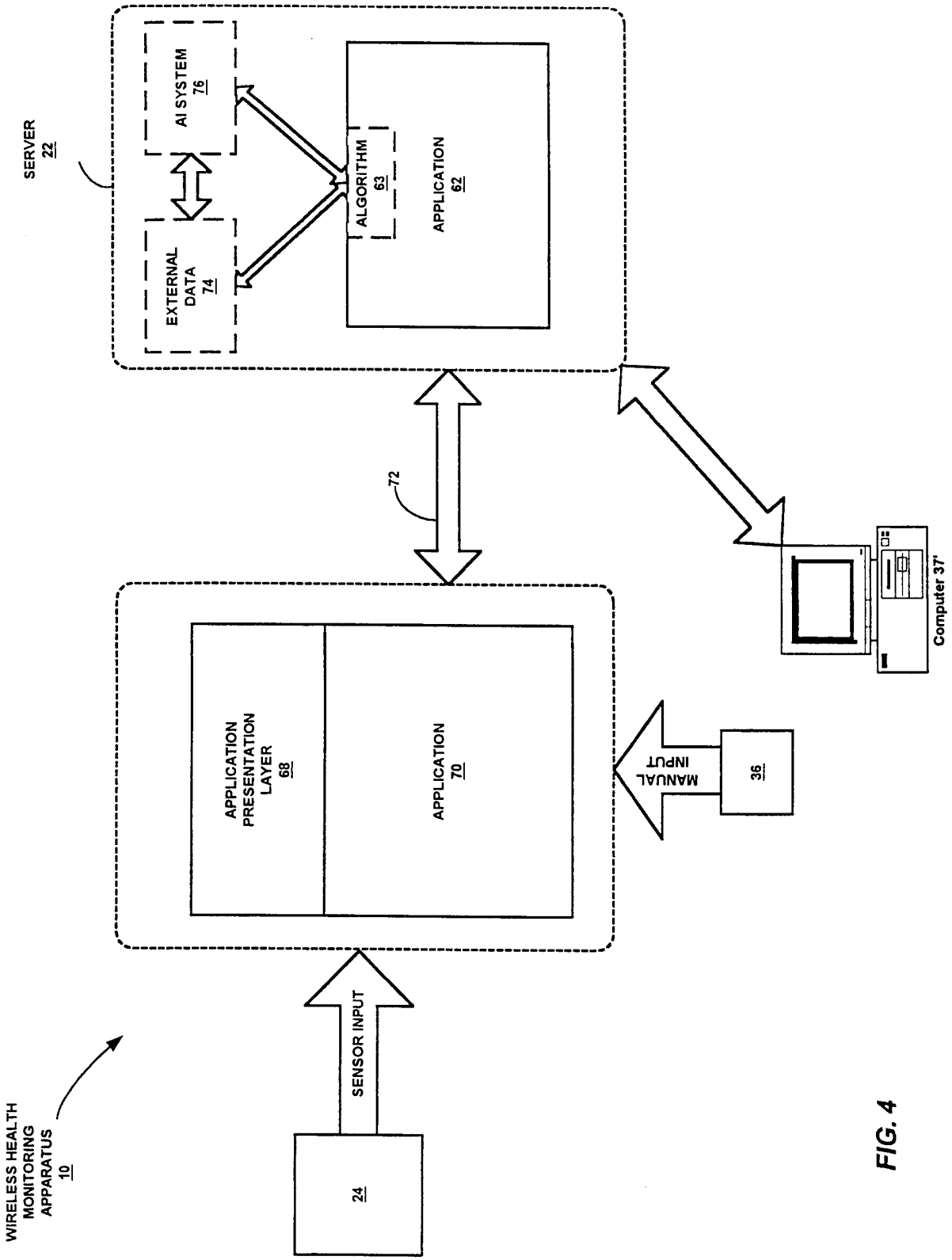
SERVER
22
AI SYSTEM
76
EXTERNAL
DATA
74
ALGORITHM
63
APPLICATION
62
72
APPLICATION
PRESENTATION
LAYER
68
APPLICATION
70
MANUAL
INPUT
36
Computer 37'
SENSOR INPUT
24
WIRELESS HEALTH
MONITORING
APPARATUS
10

FIG. 4

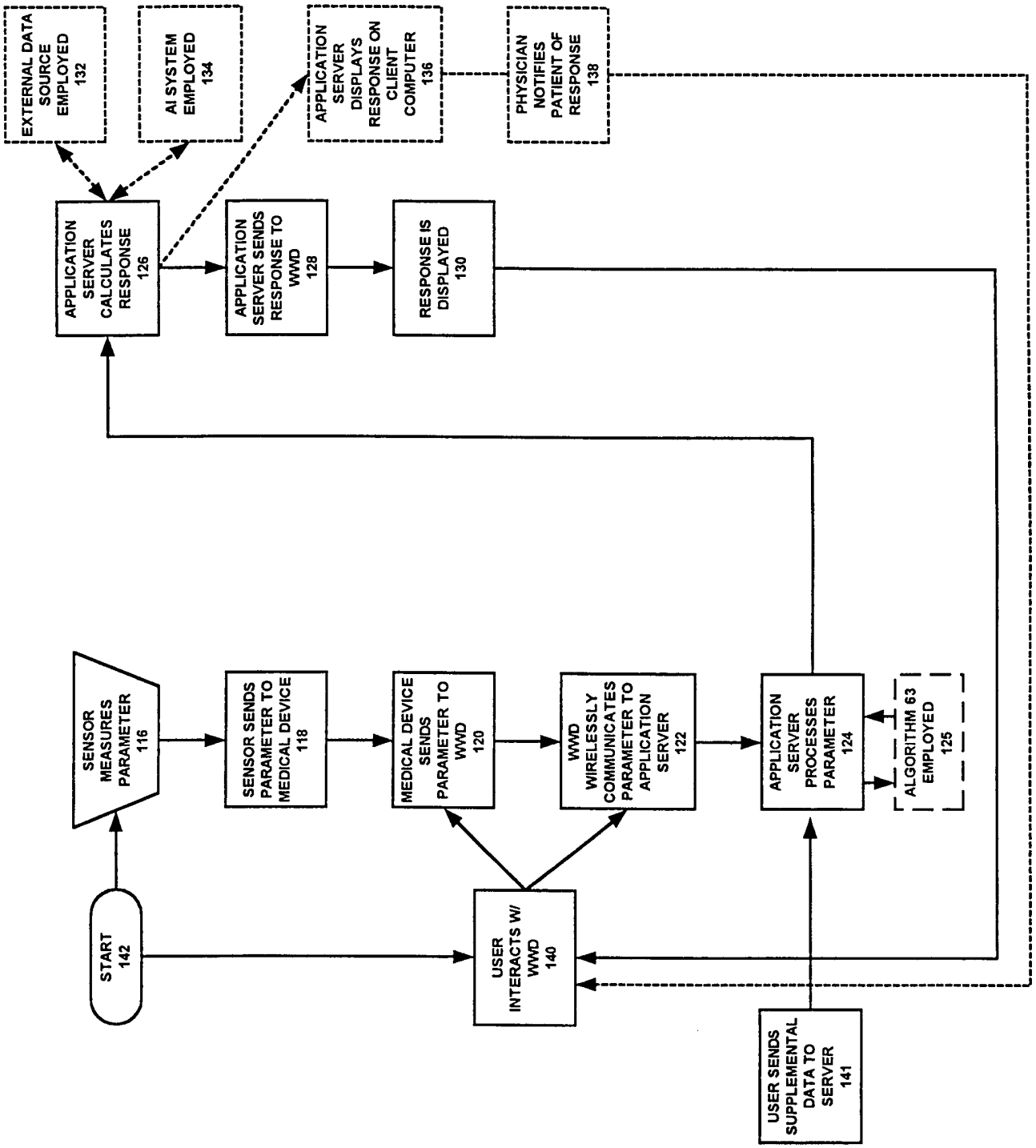
EXTERNAL DATA SOURCE EMPLOYED 132
AI SYSTEM EMPLOYED 134
APPLICATION SERVER DISPLAYS RESPONSE ON CLIENT COMPUTER 136
PHYSICIAN NOTIFIES PATIENT OF RESPONSE 138
APPLICATION SERVER CALCULATES RESPONSE 126
APPLICATION SERVER SENDS RESPONSE TO WWD 128
RESPONSE IS DISPLAYED 130
SENSOR MEASURES PARAMETER 116
SENSOR SENDS PARAMETER TO MEDICAL DEVICE 118
MEDICAL DEVICE SENDS PARAMETER TO WWD 120
WWD WIRELESSLY COMMUNICATES PARAMETER TO APPLICATION SERVER 122
APPLICATION SERVER PROCESSES PARAMETER 124
ALGORITHM 63 EMPLOYED 125
START 142
USER INTERACTS W/ WWD 140
USER SENDS SUPPLEMENTAL DATA TO SERVER 141

FIG. 5

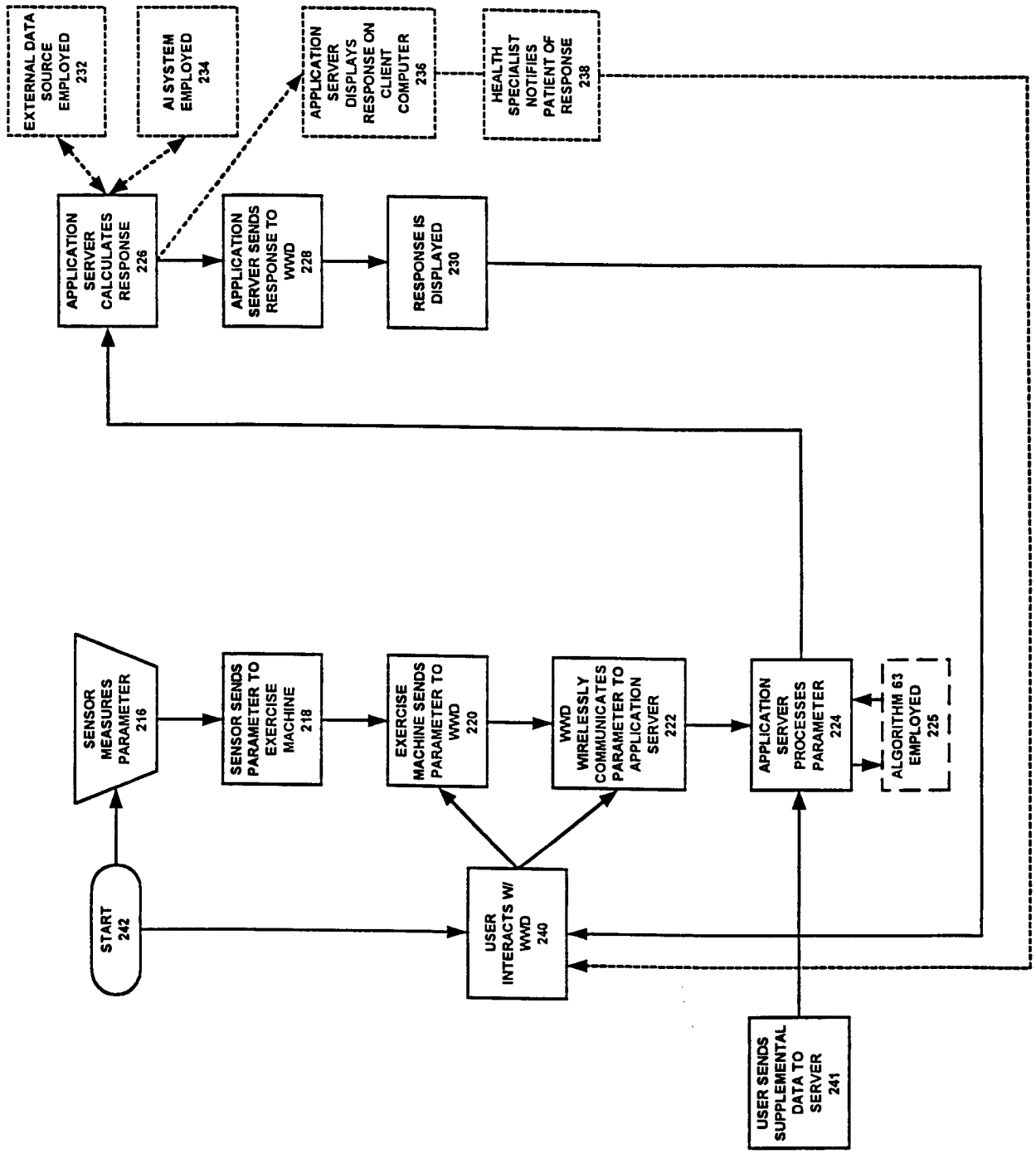
START 242
SENSOR MEASURES PARAMETER 216
SENSOR SENDS PARAMETER TO EXERCISE MACHINE 218
EXERCISE MACHINE SENDS PARAMETER TO WWD 220
WWD WIRELESSLY COMMUNICATES PARAMETER TO APPLICATION SERVER 222
APPLICATION SERVER PROCESSES PARAMETER 224
ALGORITHM 63 EMPLOYED 225
USER INTERACTS W/ WWD 240
USER SENDS SUPPLEMENTAL DATA TO SERVER 241
APPLICATION SERVER CALCULATES RESPONSE 226
APPLICATION SERVER SENDS RESPONSE TO WWD 228
RESPONSE IS DISPLAYED 230
EXTERNAL DATA SOURCE EMPLOYED 232
AI SYSTEM EMPLOYED 234
APPLICATION SERVER DISPLAYS RESPONSE ON CLIENT COMPUTER 236
HEALTH SPECIALIST NOTIFIES PATIENT OF RESPONSE 238

FIG. 6

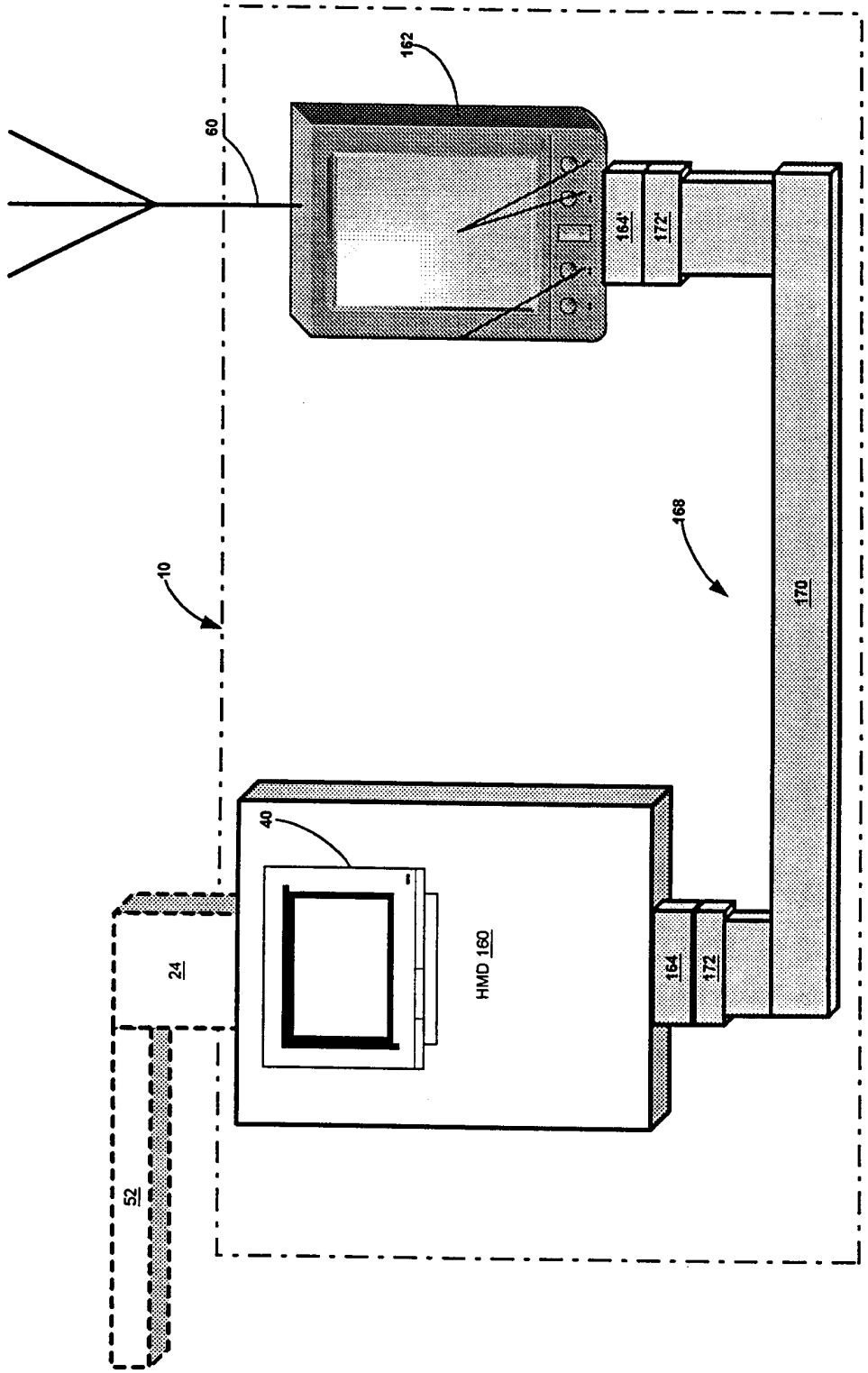

FIG. 7

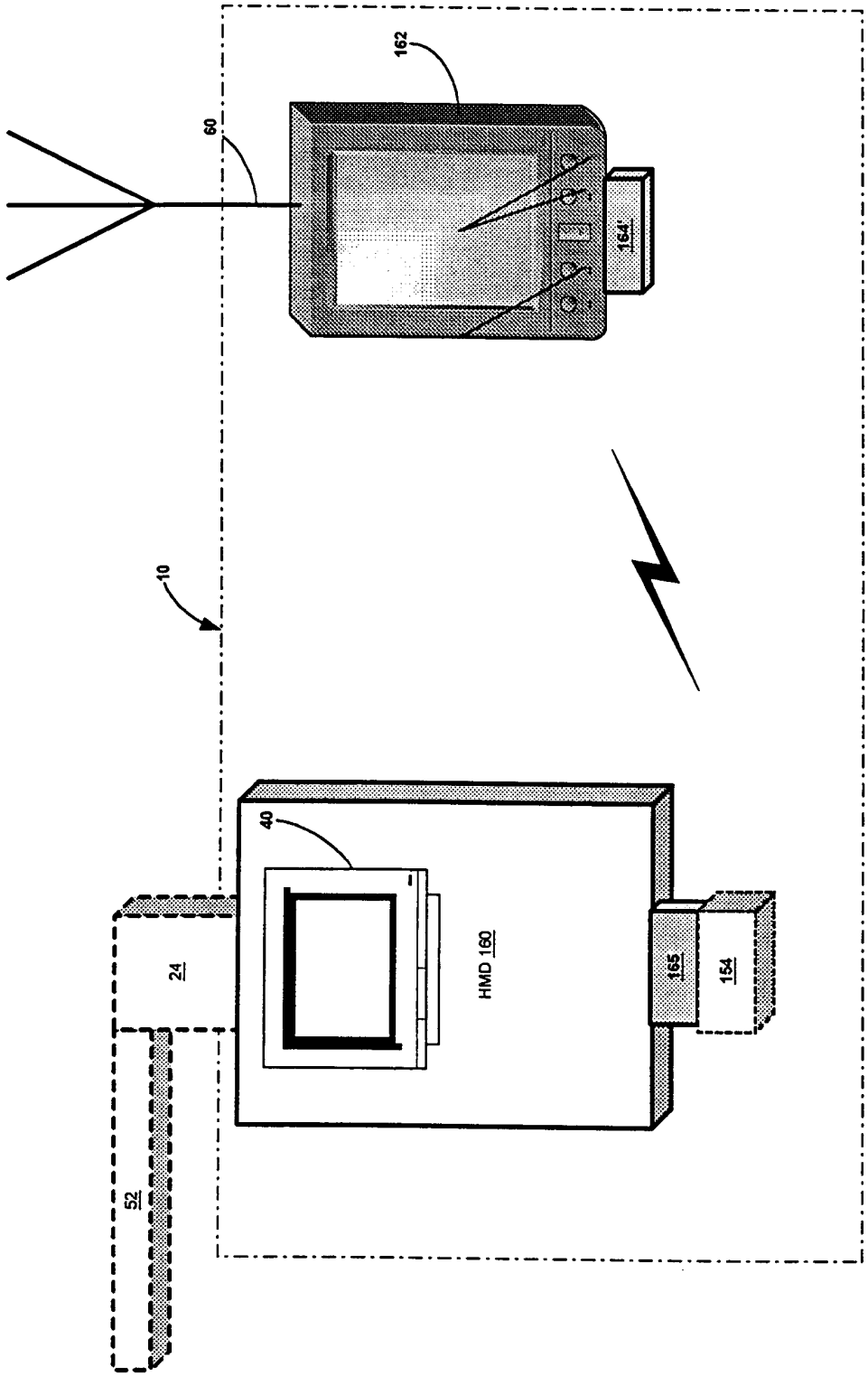

FIG. 8

INTERNATIONAL SEARCH REPORT

International application No.
PCT/US00/34159

A. CLASSIFICATION OF SUBJECT MATTER

IPC(7) :G06F 17/60
US CL :705/2, 3
According to International Patent Classification (IPC) or to both national classification and IPC

B. FIELDS SEARCHED

Minimum documentation searched (classification system followed by classification symbols)

U.S. : 705/2, 3

Documentation searched other than minimum documentation to the extent that such documents are included in the fields searched

Electronic data base consulted during the international search (name of data base and, where practicable, search terms used)

C. DOCUMENTS CONSIDERED TO BE RELEVANT

Category*	Citation of document, with indication, where appropriate, of the relevant passages	Relevant to claim No.
X	US 5,997,476 A (BROWN) 07 December 1999. See entire document.	1-59
A	US 5,987,519 A (PEIFER et al) 16 November 1999. FIG. 1-5. col. 1, line 1 - col. 5, line 4.	1-59
A, P	US 6,101,478 A (BROWN) 08 August 2000. FIG. 1-24. col. 1, line 1 - col. 4, line 53.	1-59
A, E	US 6,168,563 B1 (BROWN) 02 January 2001. FIG. 1-32. col. 1, line 1 - col. 10, line 5.	1-59
A, P	US 6,055,506 A (FRASCA, JR.) 25 April 2000. FIG. 1-18. col. 1, line 1 - col. 3, line 31.	1-59

☐ Further documents are listed in the continuation of Box C. ☐ See patent family annex.

*	Special categories of cited documents:	"T"	later document published after the international filing date or priority date and not in conflict with the application but cited to understand the principle or theory underlying the invention
"A"	document defining the general state of the art which is not considered to be of particular relevance	"X"	document of particular relevance; the claimed invention cannot be considered novel or cannot be considered to involve an inventive step when the document is taken alone
"E"	earlier document published on or after the international filing date	"Y"	document of particular relevance; the claimed invention cannot be considered to involve an inventive step when the document is combined with one or more other such documents, such combination being obvious to a person skilled in the art
"L"	document which may throw doubts on priority claim(s) or which is cited to establish the publication date of another citation or other special reason (as specified)	"&"	document member of the same patent family
"O"	document referring to an oral disclosure, use, exhibition or other means		
"P"	document published prior to the international filing date but later than the priority date claimed		

Date of the actual completion of the international search 12 MARCH 2001	Date of mailing of the international search report 09 APR 2001
Name and mailing address of the ISA/US Commissioner of Patents and Trademarks Box PCT Washington, D.C. 20231 Facsimile No. (703) 305-3230	Authorized officer Peggy Harrod TARIQ R. HAFIZ Telephone No. (703) 306-5540

Form PCT/ISA/210 (second sheet) (July 1998)★