US005309921A

United States Patent [19]

Kisner et al.

[11] Patent Number: 5,309,921

[45] Date of Patent: May 10, 1994

[54] APPARATUS AND METHOD FOR RESPIRATORY MONITORING

[75] Inventors: **Roger A. Kisner**, Knoxville; **Steven P. Baker**, Powell, both of Tenn.; **R. Bennett Muskin**, Wyndmoor, Pa.

[73] Assignee: **Spectrum Medical Technologies**, Knoxville, Tenn.

[21] Appl. No.: **833,762**

[22] Filed: **Feb. 11, 1992**

[51] **Int. Cl.**[5] **A61B 5/08**

[52] **U.S. Cl.** **128/719**

[58] **Field of Search** 340/573, 575, 579, 600; 250/338.1, 339, 342, 340, 358.1; 128/719, 716, 664, 633, 663.01, 632, 635, 903, 904

[56] **References Cited**

U.S. PATENT DOCUMENTS

3,796,208	3/1974	Bloice .	
4,011,859	3/1977	Frankenberger .	
4,350,166	9/1982	Mobarry .	
4,595,016	6/1986	Fertig et al. .	
4,648,396	3/1987	Raemer .	
4,738,266	4/1988	Thatcher .	
4,800,278	1/1989	Taniguti et al.	250/338.1
4,928,703	5/1990	Wong .	
4,947,152	8/1990	Hodges .	
4,955,946	9/1990	Mount et al. .	
4,973,843	11/1990	Murata et al.	250/338.1
4,980,566	12/1990	Heilweil	250/338.1
5,081,998	1/1992	Yelderman et al.	128/719
5,124,552	6/1992	Anderson	250/339

Primary Examiner—Lee S. Cohen
Assistant Examiner—Marianne Parker
Attorney, Agent, or Firm—Reed Smith Shaw & McClay

[57] **ABSTRACT**

A passive, non-invasive, non-contacting apparatus and method for monitoring the respiration of a subject within a monitored environment is disclosed. The apparatus generally comprises a pair of sensors which detect changes in infrared energy. The first sensor detects changes in infrared energy which signifies and corresponds to changes in the monitored environments of a component to be monitored and generates a first signal. The second sensor detects changes in infrared energy which signifies reference infrared energy in the monitored environment and generates a second signal. A processing system converts the first and second signals into a third signal which signifies the concentration of the monitored component in the monitored environment. The monitored components may be CO_2, H_2O or a constituent of exhaled breath such as a ketone, amino acid, insulin or pintane. In another embodiment of the invention changes in blood pH may be monitored by adding an additional sensor. Micromotion of the subject's body may also be monitored in yet another embodiment through the use of a single sensor together with an appropriate processing system.

25 Claims, 8 Drawing Sheets

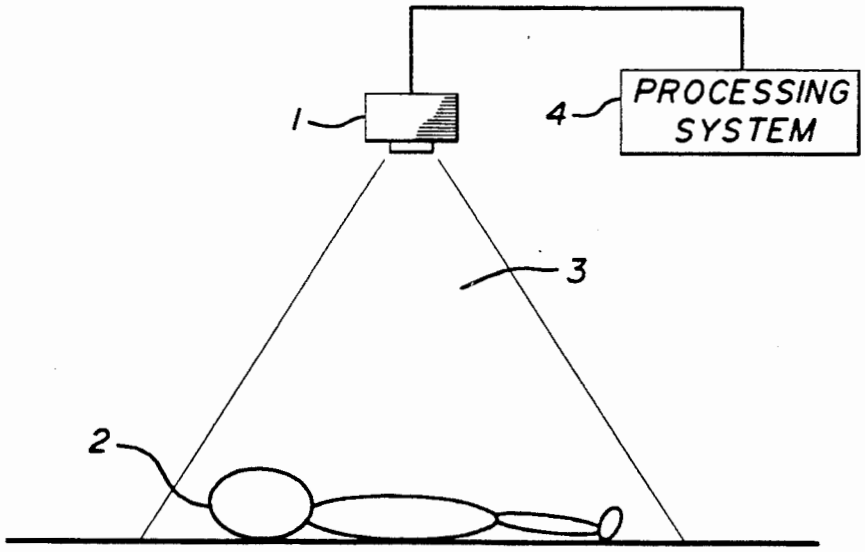

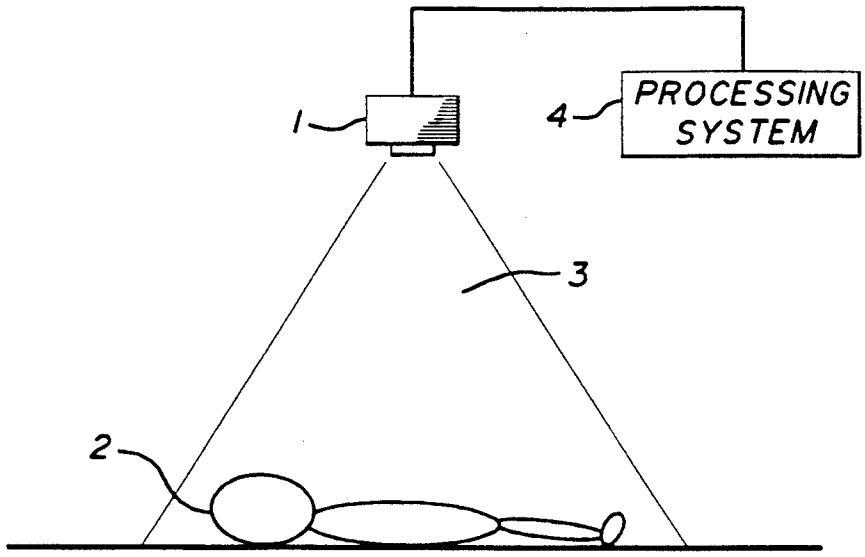

FIG. 1

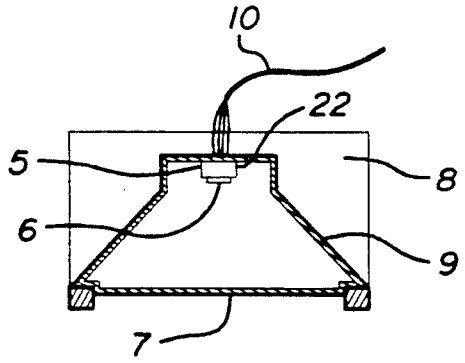

FIG. 2

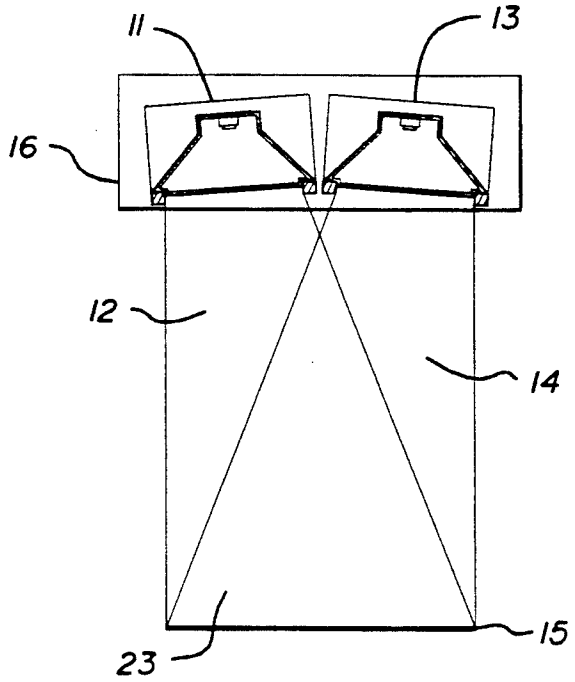

FIG. 3

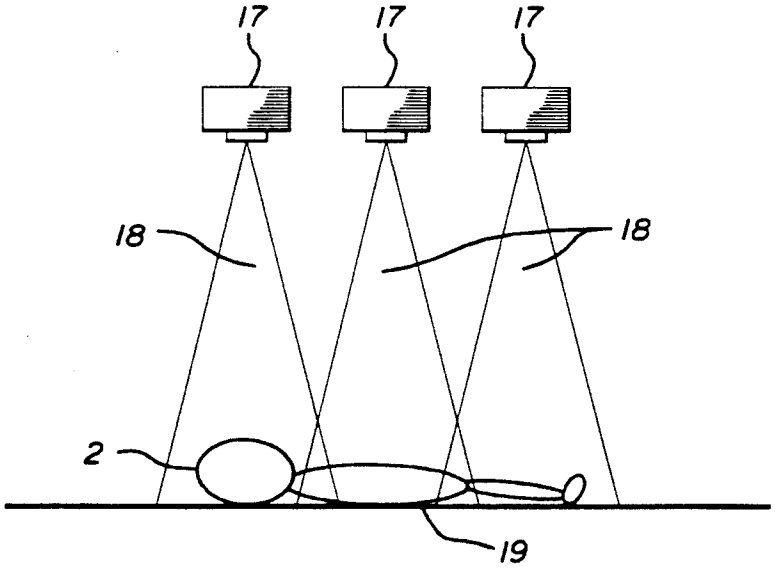

FIG. 4

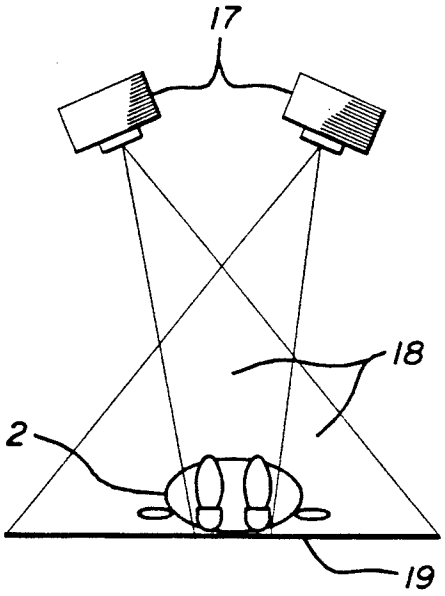

FIG. 5

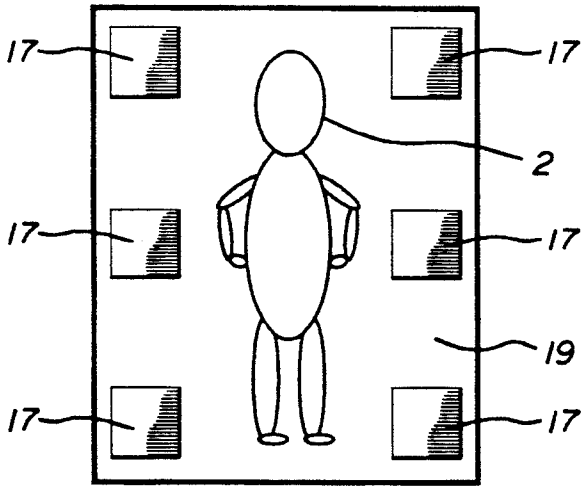

FIG. 6

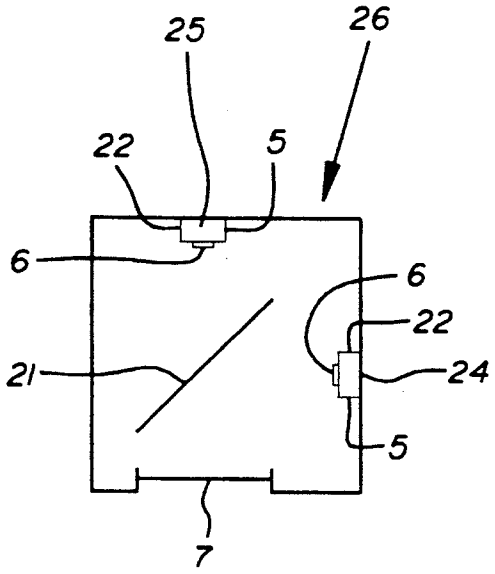

FIG. 7

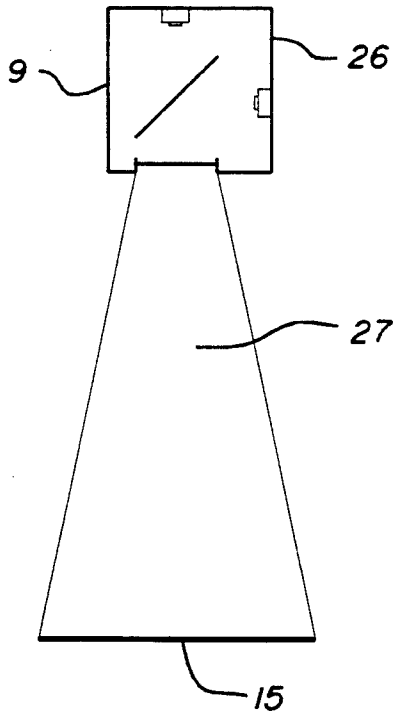

FIG. 8

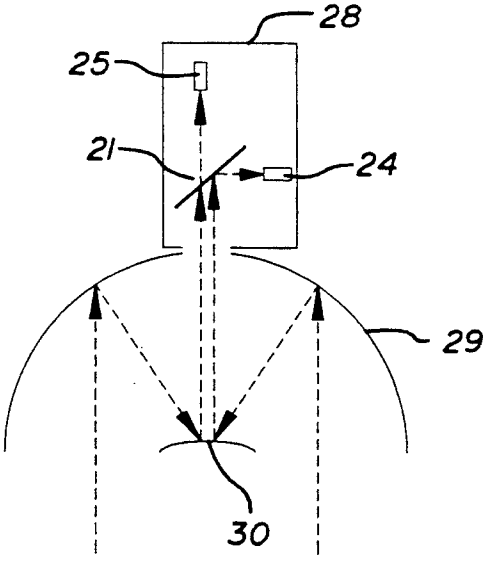

FIG. 9

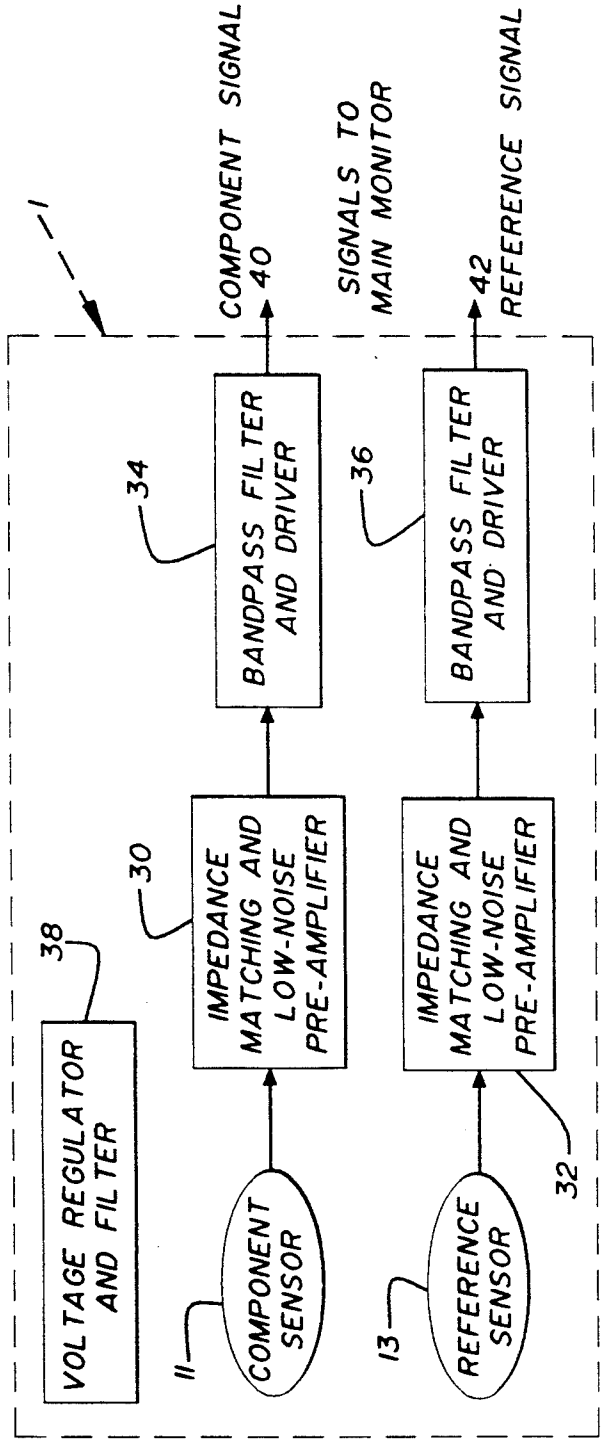

FIG. 10A

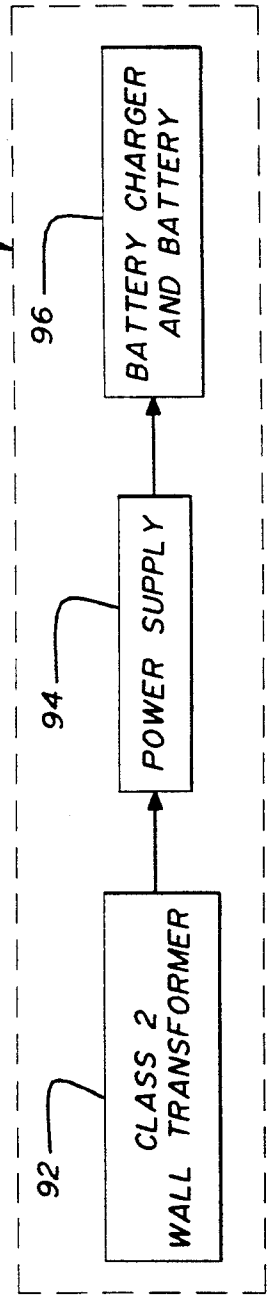

FIG. 10C

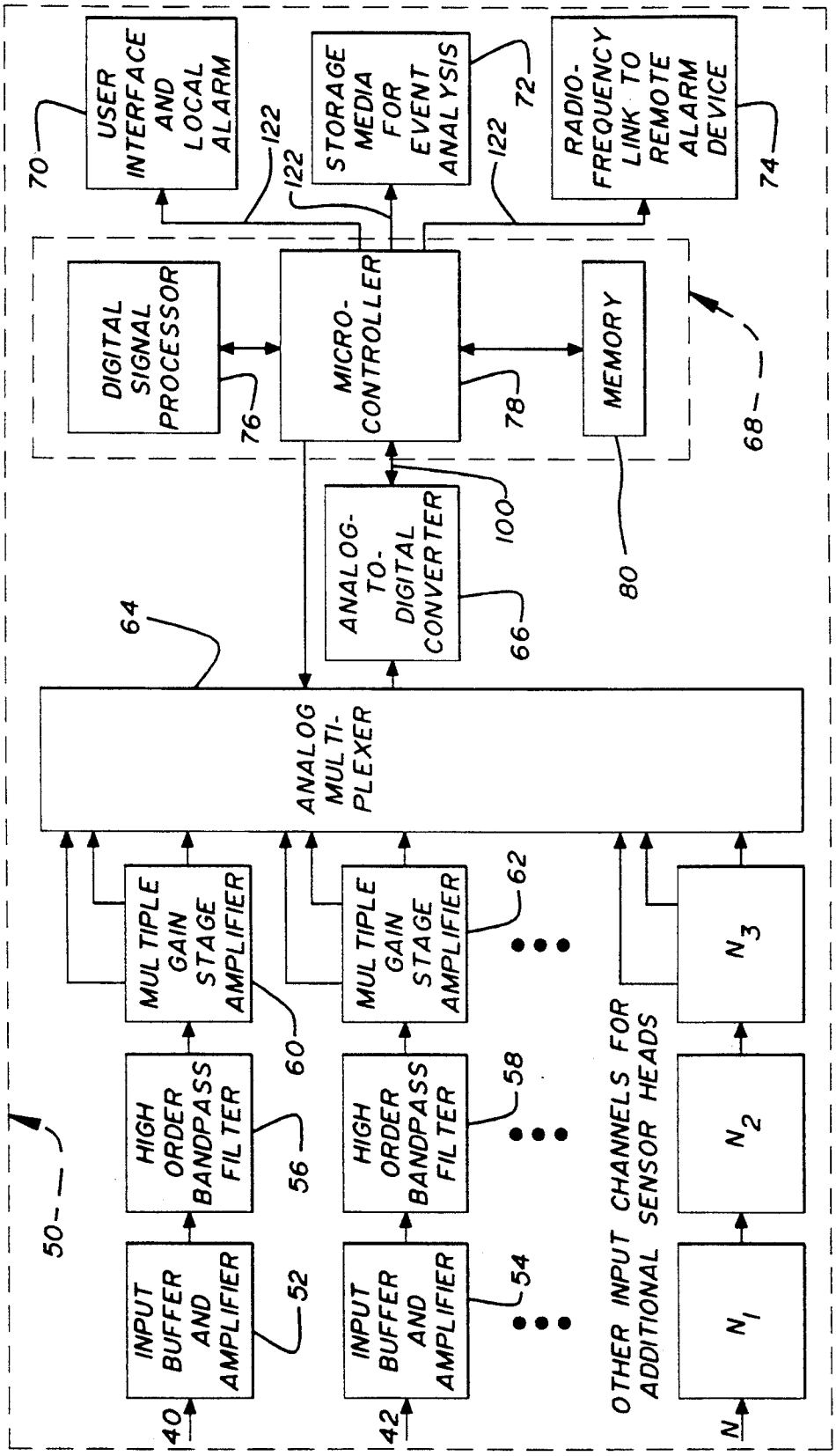
USER INTERFACE AND LOCAL ALARM
STORAGE MEDIA FOR EVENT ANALYSIS
RADIO-FREQUENCY LINK TO REMOTE ALARM DEVICE
DIGITAL SIGNAL PROCESSOR
MICRO-CONTROLLER
MEMORY
ANALOG-TO-DIGITAL CONVERTER
ANALOG MULTI-PLEXER
MULTIPLE GAIN STAGE AMPLIFIER
HIGH ORDER BANDPASS FILTER
INPUT BUFFER AND AMPLIFIER
OTHER INPUT CHANNELS FOR ADDITIONAL SENSOR HEADS
N1
N2
N3
N
40
42
50
52
54
56
58
60
62
64
66
68
70
72
74
76
78
80
100
122
122
122

FIG. 10B

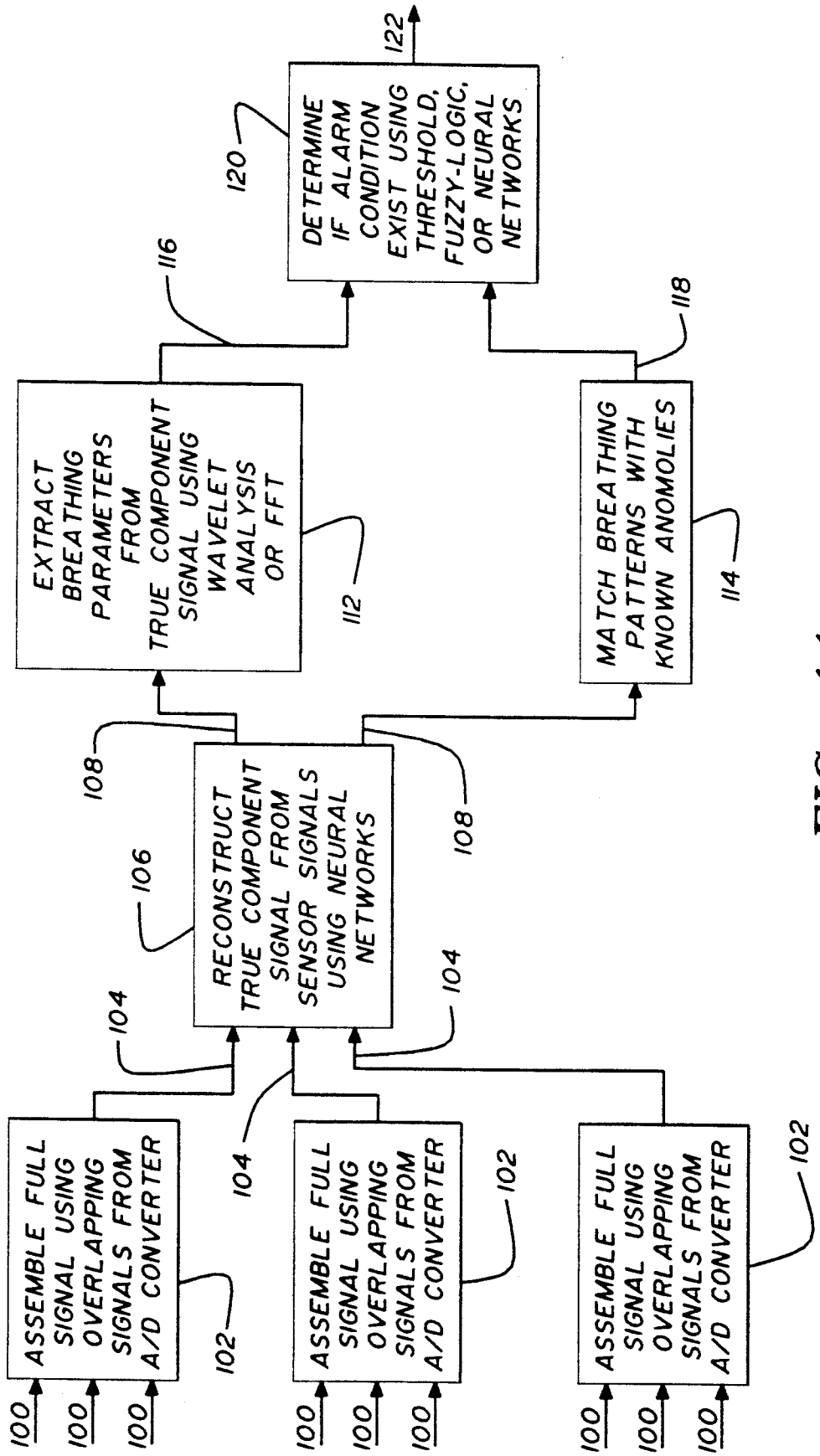
ASSEMBLE FULL SIGNAL USING OVERLAPPING SIGNALS FROM A/D CONVERTER
ASSEMBLE FULL SIGNAL USING OVERLAPPING SIGNALS FROM A/D CONVERTER
ASSEMBLE FULL SIGNAL USING OVERLAPPING SIGNALS FROM A/D CONVERTER
RECONSTRUCT TRUE COMPONENT SIGNAL FROM SENSOR SIGNALS USING NEURAL NETWORKS
EXTRACT BREATHING PARAMETERS FROM TRUE COMPONENT SIGNAL USING WAVELET ANALYSIS OR FFT
MATCH BREATHING PATTERNS WITH KNOWN ANOMOLIES
DETERMINE IF ALARM CONDITION EXIST USING THRESHOLD, FUZZY-LOGIC, OR NEURAL NETWORKS
100
102
104
106
108
112
114
116
118
120
122

FIG. 11

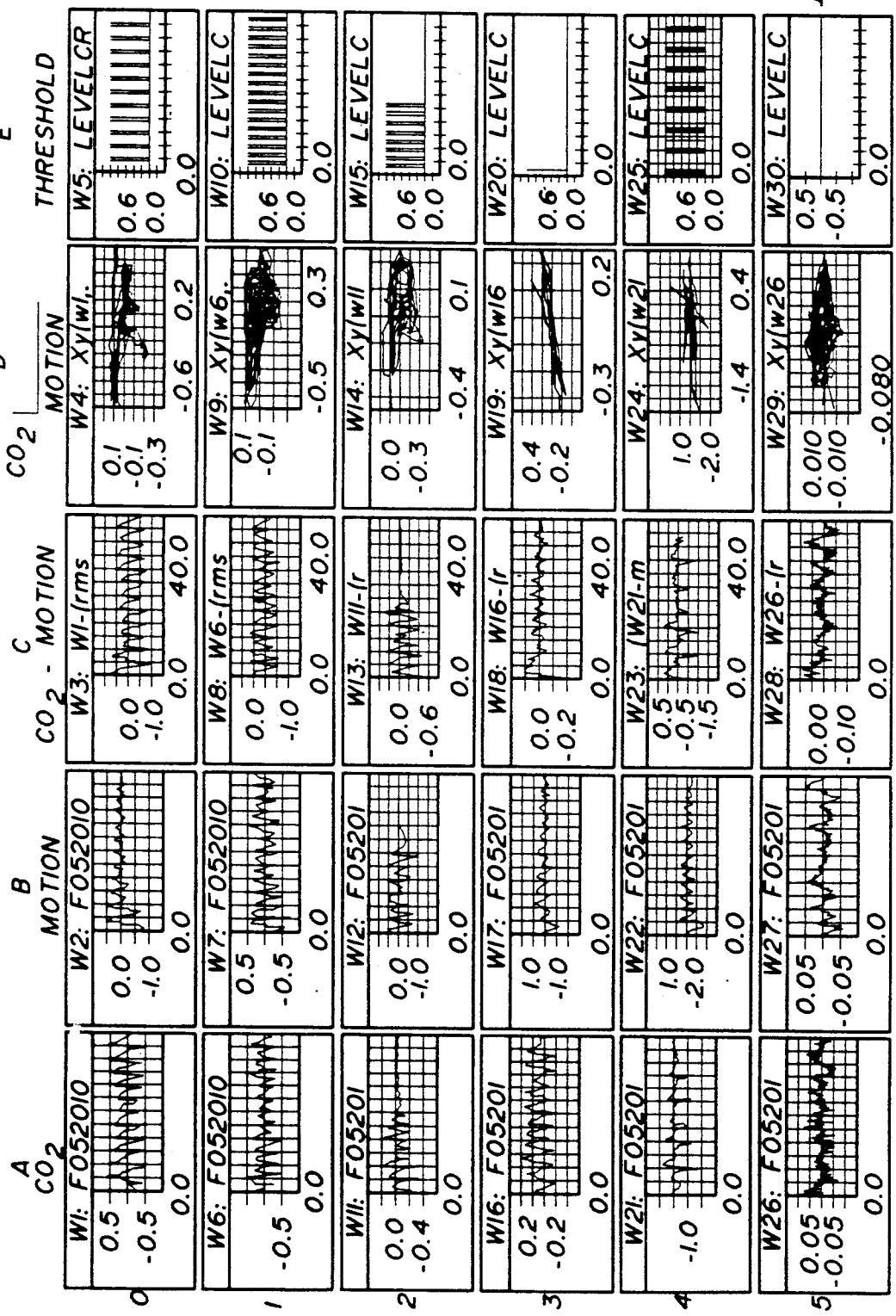
A
CO_2
B
MOTION
C
CO_2 - MOTION
D
CO_2 MOTION
E
THRESHOLD
W1: F052010
W2: F052010
W3: W1-(rms
W4: Xy(w1,
W5: LEVELCR
W6: F052010
W7: F052010
W8: W6-(rms
W9: Xy(w6,
W10: LEVELC
W11: F05201
W12: F05201
W13: W11-(r
W14: Xy(w11
W15: LEVELC
W16: F05201
W17: F05201
W18: W16-(r
W19: Xy(w16
W20: LEVELC
W21: F05201
W22: F05201
W23: (W21-m
W24: Xy(w21
W25: LEVELC
W26: F05201
W27: F05201
W28: W26-(r
W29: Xy(w26
W30: LEVELC
0
1
2
3
4
5

FIG. 12

APPARATUS AND METHOD FOR RESPIRATORY MONITORING

BACKGROUND OF THE INVENTION

In general, a change in an individual's respiration (known as "apnea" when such a change is a transient cessation of respiration) corresponds to a change in the physical condition of that individual. In the case of invalids, infants, the elderly, hospitalized patients, or individuals with obstructive sleep apnea, a change in respiration may be attributable to present or impending physical distress. Accordingly, an urgent need exists for an improved respiratory monitoring system for such individuals that will meet technical and clinical needs for reliable monitoring of individuals at risk of respiratory distress. Many such individuals are in need of such a system, as many are unable to summon help because they may be asleep, handicapped, bedridden, hospitalized or otherwise unable to communicate. There is an especially critical need to continuously monitor some infants from birth through one year. Accordingly, the present invention relates to a pioneering, non-invasive, non-contacting, safe system which monitors the respiratory functions and/or fluctuations in exhaled breath including carbon dioxide (CO_2), water vapor, various constituents in the blood gases and which determines other functions and/or fluctuations including the pH level of an individual's blood as well as the motion of the subject.

The presence of CO_2 and other component gases present in exhaled breath can be detected by measuring the breath's absorption of specific wavelengths of light. With an increase in concentration of a component gas, comes a decrease in transmission of those specific wavelengths. Thus, if an emitter and a detector of infrared energy in an absorption band of a component gas are separated by an open distance, the presence (and perhaps the concentration) of gas in that open environment can be evaluated. Two basic system types can be constructed that use this principle of illumination to measure absorption characteristics: those that use a powered source of interrogation energy—called active systems; and those that use sources of energy naturally occurring in the environment—called passive systems. The passive system offers a more reliable method for monitoring a patient's respiration. A discussion of both types of systems follows:

A powered emission device and a detector comprise an active detection system. Gases passing between the emitter-detector pair will be detected and measured. Thus, it is important that the geometry of the emitter and detector be arranged to allow for the passage of a patient's breath between them. The distances can be made larger by increasing emission intensity or improving detector sensitivity (or both). The detector can be made receptive to incoming energy over a wide angle of view. Even with a wider view angle, however, only gases between the detector and the emitter will be measured. Thus, multiple emitters are required to achieve a larger detection zone volume.

Patients may assume numerous positions and orientations while being monitored. Therefore, to effect detection of CO_2 in breath, when using an active system would require many emitters and detectors placed at various locations within certain proximity to the patient. Theoretically, breath, whether it travels to the side or upwards, could be detected if enough emitters and detectors were placed in enough orientations and angles. Unfortunately, some of the detectors or emitters would need to be under the patient (in the mattress if the patient is being monitored in bed for example) so as to catch breath from a patient in a side-facing position. This may not be possible from a practical point of view. Other problems with the active emitter approach include cost of the large number of emitters and detectors required to form a relative uniform region of detection, the unreliability of such a large number of components, the complicated apparatus that would be required to house such a system, and the complexity of electronics required to control the process data from numerous emitters and detectors.

In addition to the above-stated drawback, active emitters require a source of power. Photon emission is inefficient at the wavelengths of interest (i.e., 4 to 20 microns for many carbon-containing molecules). The large amounts of power needed also require a large battery to supply backup power during loss-of-power events. This also may be a substantial drawback.

In a passive system, the patient and surrounding environment become the source of interrogating energy.

Thus, all of the problems are eliminated that are associated with employing multiple emitters as discussed above. The requirements then placed on the detector assemblies are that they respond to the wavelengths emitted by the surroundings, are capable of wide-angle coverage, are sensitive enough to detect the depression in infrared energy due to presence of CO_2, or other component being detected, regardless of patient orientation. The invention described herein may utilize a reference detector to cancel unwanted variation since the emitter in this system is a highly variable energy source (e.g., temperature and patient motion affect emission). A passive emission infrared gas detection system is superior to an active system in cost, reliability, and performance if these requirements are met.

Presently, devices exist on the market that monitor a patient's respiration. These devices, known as capnographs, monitor the exhaled CO_2 from a patient's airways by continuously sampling the exhaled breaths. However, unlike the present invention, capnographs, require a physical attachment between the capnograph and the patient's airways. This attachment limits the clinical applications of the capnograph to intugated patients or short term monitoring applications. An even in these limited applications many difficulties arise in the monitoring process. Difficulties such as mucous plugs or other secretions blocking the sampling tube, patient movements disrupting the positioning of the sampling line, agitated patients pulling the sampling tube out of position, etc., all add to inaccuracies in the measurements taken and to the inconvenience of using the device.

Other respiratory monitoring systems have been proposed. For example, a non-contacting apnea detector is disclosed in U.S. Pat. No. 4,350,166 (Mobarry). This device monitors carbon dioxide (CO_2) exhaled by an infant by detecting the difference in the infrared ("IR") radiation caused by the absorption of IR energy by exhaled CO_2 of the patient. However, this device does not have the capability of accounting for changes in the level of infrared radiation caused by other factors such as the patient's general body movements, repositioning of the patient, or general disruptions in the IR energies

emitted from the crib (as could be caused, for example, by a warm nursing bottle).

In U.S. Pat. No. 4,738,266, Thatcher discloses non-contact monitoring device which allegedly contains improvements over the Mobarry system. The Thatcher device contains an infrared radiating element in the system. The detection of the infant's breathing is directly related to whether the requisite amount of carbon dioxide has passed through the device-produced infrared radiation. Changes in the radiation level are registered and compared to the desired value. The infant's exhaled breath must pass through this IR source in a constant manner, or else detector values will be erroneous. This device has great clinical limitations.

Another device, which is allegedly an improvement over the Mobarry system, is disclosed in U.S. Pat. No. 4,928,703 (Wong). Wong mentions the problems associated with passive sources of radiation, such as from the patient's own motions, which are detected by the Mobarry system and which compromise the device's accuracy. The Wong device, like the Thatcher device, includes a means for emitting radiation. The radiation generated is subsequently collected and measured to determine the amount of carbon dioxide in the path of the radiation as it travels between an emitter and a collector. The only signal monitored by the Wong device is that related to the absorbed radiation which corresponds to the infant's exhaled carbon dioxide. However, this device still requires an artificial means for emitting infrared radiation, which inherently limits the number of locations at which the device can be positioned such that it operates safely and effectively. Its battery power requirements in the event of loss or unavailability of a.c. power are also excessive. Accordingly, the need still exists for a safe, reliable non-invasive, non-contacting system for monitoring an individual's respiratory condition which does not require an artificial source of infrared energy, which is capable of differentiating between infrared energy absorbed by a particular component such as carbon dioxide and other forms of infrared energy, and which may be mounted in a variety of locations without sacrificing effectiveness.

SUMMARY OF THE INVENTION

In accordance with this invention, respiratory monitoring of individuals in a variety of settings may be achieved in a non-invasive, non-contacting, comfortable, accurate and safe manner by detecting infrared energy along the entire spectrum, even in the presence of wideband IR interference, without the need for a supplemental or active source of infrared energy. This is accomplished by detecting changes in infrared energy emitted by various sources such as the human body and by converting the detected energy into a form by which others may be alerted to a change in the well-being of the patient.

Humans, being at a core temperature of 98.6° F. and skin temperature above ambient, are radiators of infrared energy over a wide spectral range. The emission of infrared energy is dependent upon body temperature, skin emissivity, shielding materials (e.g., clothing and blankets), movement, and changes in concentrations of certain gases in the path between the human and a detector of infrared energy. In accordance with the invention, the emitted energy of both the patient and his surroundings is used to illuminate detectors, which may be placed in a variety of locations, for example, above the patient or to his side.

Carbon dioxide, a gas constituent of exhaled breath, is an absorber of infrared energy at specific wavelengths. Measurement of infrared energy absorption in the CO_2 spectrum indicates variations in the concentration of CO_2, which directly corresponds to the process of breathing.

A non-invasive, non-contacting system has been designed and constructed, which employs a plurality of, but no less than two infrared sensors capable of detecting different infrared bandwidths. Each sensor is equipped with a pyroelectric crystal and special optical filter so that a specific range of infrared wavelengths can be admitted. One sensor, the "reference" sensor, responds to changes in infrared energy outside of the wavelengths of a particular component in the area being monitored. The second sensor, the "component" sensor, responds to changes in the range of infrared wavelengths corresponding to the absorption bands of the component to be measure, for example, the absorption bands of CO_2 or H_2O.

There are three possible variations in the assignment of range and overlap of wavelengths for the two infrared sensors:

(1) The reference sensor responds to changes in infrared energy outside the wavelengths of a particular component in the area or environment to be monitored. The component sensor responds to the specific wavelengths of the component. Thus the reference sensor senses overall deviations in the amount and rate of infrared energy emitted and in the emissivity of the environment while the component sensor senses deviations arising only from changes in the component wavelength range, which may be influenced by the same effects causing deviations in the reference spectrum. No overlap exists between the spectrums of the reference and component sensors.

(2) The reference sensor responds to changes in infrared energy outside the wavelengths of a particular component in the area or environment being monitored. The component sensor and, in addition, responds to the wavelengths of the particular component to be measured. For example, in addition to CO_2, the sensor may be adapted to sense changes in wavelengths corresponding to the body temperature, skin emissivity, shielding materials, movement, and changes in concentrations of certain gases in the path between the patient and the sensor. In this variation, the component sensor overlaps the reference sensor's spectrum; and

(3) The reference sensor responds to changes in a range of wavelengths that spans both the non-component infrared region and a component region. The component sensor responds to the specific wavelengths of the component only. In this variation the reference sensor overlaps the component sensor's spectrum.

Any of the foregoing variations in the assignment of range and overlap of wavelengths for the two infrared sensors may be adapted for use in all of the embodiments of the invention described herein.

Because the presence of infrared energy from various sources from other than the intended source (e.g. body motion, ambient light etc) in the monitored environment, the component sensor is modulated by general motion of the patient as well as other factors which affect the amount of infrared energy (such as changes in the concentration of the component of interest), a new signal must be derived by converting the reference sensor signal and the component sensor signal into a third signal signifying the concentration of the moni-

tored component from which the infrared energy from other than the component source has been removed. The new signal is a reflection of variations in the component concentration along the optical pathway. In the case of a CO_2 component, this signal can be further filtered and digitally processed to enhance the breathing component, which can then be analyzed in real-time to determine the breathing rate and relative intensity. In the case of an H_2O component, this signal can be further filtered and digitally processed to enhance a water vapor component which can then be analyzed in real-time to determine the depth of breathing (i.e. the volume of expired air). Also, an H_2O sensor used in conjunction with a CO_2 sensor to produce a signal which corresponds to the ratio of the signals derived from the H_2O and CO_2 sensors may further be processed to determine the trends in blood pH levels. Moreover, other constituents of exhaled breath, such as ketones, amino acids, insulin, pintane and the like may be detected in a similar fashion.

Accordingly, it is an object of the present invention to provide a non-contacting, a non-invasive apparatus which detects changes in the respiratory condition of an individual by monitoring changes in infrared emissions, without the need for active or supplemental infrared emitter or other supplemental electromagnetic energy source or for physical contact with a subject.

Another object of this invention is to provide a non-contacting apparatus which non-invasively and continuously monitors a change in the pH level of an individual's blood by monitoring changes in infrared conditions, without the need for a supplemental infrared emitter or other source of supplemental electromagnetic energy or physical contact with a subject.

A further object of this invention is to provide a non-contacting apparatus which non-invasively and continuously monitors changes in the amount of a component substance such as CO_2 or H_2O or blood gases present in the exhaled breath by monitoring the changes in the amount of infrared energy emitted by the component being monitored, without the need for a supplemental infrared emitter or other source of supplemental electromagnetic energy or physical contact with a subject.

Another object of this invention is to provide a method for detecting changes in the respiratory condition of an individual by monitoring changes in infrared emissions, without the need for a supplemental electromagnetic energy or physical contact with a patient.

Yet a further object of this invention is to provide a method for detecting a change in the pH level of an individual's blood by monitoring changes in infrared emissions, without the need for a supplemental infrared emitter or physical contact with a subject.

Another object of this invention is to provide a non-invasive method for continuously detecting changes in the amount of a component substance such as CO_2, H_2O or blood present in expired breath located in a particular area by monitoring the changes in the infrared energy emitted by the component being monitored, without the need for a supplemental infrared emitter or other source of supplemental electromagnetic energy or physical contact with a subject.

The fundamental concepts which are the basis of this invention are adaptable to many medical and non-medical applications. Examples of medical devices which are adaptable from the invention described herein include devices which are capable of measuring CO_2 only, CO_2 and H_2O vapor only, general body motion and other gases which are exhaled and which indicate various physiologic conditions of a patient.

General body motion may be monitored by a device which senses body movements, such as "micromotion," associated with breathing or other patient activity. Such a device may utilize a single infrared detector comprising a sensor, a signal processing system and, optionally, a microphone of the type used in present baby monitors.

Although this embodiment is applicable to all types of subjects, the monitoring of infants is of particular interest. A number of over-the-counter devices exist that allow parents to listen to crib sounds through a wireless microphone. These monitors are sold by several toy and baby product manufacturers. These monitors serve the function of alleviating parental anxiety by alerting them to situations where the baby vocalizes distress. However, conditions exist in which an infant may be unable to produce audible indication of distress. For those conditions, devices that listen to an infant provide no indication of a problem.

One embodiment of this invention includes a low-cost infant monitoring device using infrared-based micromotion detection that requires no special training or abilities of the caregiver. This embodiment allows the caregiver to monitor infants in distress whether the distress is vocalized or not. Present baby activity monitors only provide capability for vocalizations.

Motion detection can be combined with audio monitoring to produce an enhanced version of present mass-marketed baby monitors. The monitor can be mounted over a crib where it detects motion anomalies (e.g., lack of micromotion and excessive motion) and provides listen-in capability for parents. The enhanced baby monitoring device may transmit this monitoring information to a portable alert device through a radio-frequency (wireless) link.

The invention may also be adapted to sense gases other than those specifically described herein by utilizing the same technology described above. For example, diabetics exhale specific elements which could be monitored to determine a patient's diabetic status. In yet another medical application, certain ketones exhaled by individuals who suffer from liver ailments could be monitored to determine a patient's pathological liver condition.

A high resolution thermographic scanning system utilizing this infrared technology is also contemplated. This scanner could be used, for example, to detect minute temperature gradients on the skin surface. This scanning system may be sued either with or without certain drugs which when injected increase the metabolic rate of tumors, thereby making them more visible to an infrared scanning system. The scanner would also provide a single, non-ionizing screening for tumors present under the skin. Many other applications which indicate the physiological status of patients are contemplated which sense the infrared absorption peaks of various exhaled gases and elements. As described herein, the signals generated by the various absorption peaks may be converted into useful information adaptable to a wide variety of medical applications.

Examples of non-medical applications which utilize this invention include devices which detect the presence of elements such as methane, ammonia, carbon monoxide, and other toxic and/or flammable elements in the monitored environment. A device which is capable of detecting such elements would be extremely use-

ful for many industrial applications including an early warning detection system for fire fighters. The absorption peaks of anti-oxidants present in automotive and industrial lubricating fluids (e.g. motor oil, transmission fluid, antifreeze, etc.) may also be monitored for analysis. Such analysis would render information relative to the viability of the fluid, indicating when the fluid has deteriorated to the point where replacement is desired or required.

This invention may also be utilized for environmental applications. Concentrations of certain toxic or gaseous elements present in the waste streams of industrial plants or municipal sewer systems may be monitored. Other non-medical applications contemplated include air quality monitoring devices for commercial and residential buildings and breathalizers for detecting blood alcohol content present in a subject's bloodstream.

Further features, objects and advantages of the invention will become apparent to those skilled in the art upon consideration of the following detailed explanation of specific embodiments of the invention, and with reference to the drawings accompanying this specification.

BRIEF DESCRIPTION OF THE DRAWINGS

FIG. **1** is a schematic of one embodiment of the monitoring system of this invention.

FIG. **2** is a cross sectional side view of an individual sensor head or module which includes refractive optic elements and component and reference sensor elements.

FIG. **3** is a cross sectional side view of a breathing detector comprising individual component and reference sensors, of the type shown in FIG. **2**, mounted in a dual sensor assembly housing, and which also employs refractive optics and convergent topology.

FIG. **4** is a side view of one embodiment of the monitoring system of this invention which utilizes three breathing detectors, refractive optics, and convergent topology.

FIG. **5** is an end view of an embodiment of the monitoring system which utilizes two rows, one on each side of the patient, of the type of detector shown in FIG. **4**.

FIG. **6** is a plan view of the monitoring system of FIG. **5**.

FIG. **7** is a cross sectional side view of a composition detector which utilizes refractive and reflective optics.

FIG. **8** is a schematic depicting the side view of the composition detector of FIG. **7** which further utilizes reflective and collinear optics only.

FIG. **9** is a schematic depicting the side view of one embodiment of a detector of this invention which utilizes reflective and collinear optics only.

FIG. **10** A is a block diagram of one embodiment of the sensor module or head portion of the signal processing system which processes the infrared energy signals received by the component and reference sensor to the input of the main signal processor.

FIG. **10B** is a block diagram of one embodiment of the main signal processing portion of signal processing system which processes signals received from the sensor module or head which produces the desired output signals.

FIG. **10C** is a block diagram of one embodiment of the power supply which supplies suitable power to the monitor.

FIG. **11** is a block diagram of steps of signal processing conducted within the microprocessor system of FIG. **10B** which includes microcontroller, digital signal processor and memory of the system.

FIG. **12** graphically depicts experimental results.

DETAILED DESCRIPTION OF THE INVENTION

The monitoring system of this invention, as illustrated generally in FIG. **1**, comprises breathing detector **1** and an electronic processing system. Various wavelengths of infrared light emitted from patient **2** in detection region **3** are identified by breathing detector **1**. The detector **1** sends signals which correspond to the variations in the infrared wavelengths to processing system **4**. Processing system **4** then converts the signals received from detector **1** into a signal which indicates, for example, changes in concentrations of CO_2, H_2O, pH, blood gases and/or body motion of the subject being monitored present in detection region **3**.

Breathing detector **1** comprises more than one sensor module of the type shown in FIG. **2**. Referring now to FIG. **2**, each sensor module comprises a sensor **5** capable of detecting changes in infrared energy, preferably a pyroelectric sensor; a filter **6** capable of passing only infrared energy of desired wavelengths, preferably an optical filter; a lens **7** capable of allowing the sensor to detect a wide area of infrared radiation, preferably a linear or non-linear array lens; thermal insulation **8**; sensor module housing **9**; and a means for supplying power to the module and transmitting the signal generated by the sensor module from the breathing detector **1** to the electronic processing system **4**, preferably by means of a signal/power cable **10**.

The detector of FIG. **2** comprises two or more of the sensor modules. One embodiment of the respiratory monitoring system, shown in FIG. **3**, utilizes a breathing detector having two sensor modules. One sensor module, which will be referred to as component sensor **11**, responds to changes in infrared energy within the wavelengths of the particular component to be monitored which appear in detection region **12**. The component may be, for example CO_2 or H_2O, in which case the component sensor **11** will be referred to as the CO_2 sensor or H_2O sensor respectively. The other sensor module, which will be referred to as reference sensor **13**, responds to changes in infrared energy wavelengths which may be near but not overlapping those of the component sensor **11**, which also appear in detection region **14**. In another embodiment, the component sensor **11** responds as above to the wavelengths of the component to be measured, but also to the same wavelengths of the reference sensor **13**. In yet another embodiment, the reference sensor **13** responds to changes in a range of wavelengths that spans infrared regions of both the component and a non-component, and the component sensor responds to wavelengths of only the component. Both sensors are preferably angled to converge their respective images on image detection plane **15** and are mounted in a commonly shared breathing detector housing **16**.

Other embodiments of the invention may comprise a multiplicity of detectors in various configurations. The detectors utilized by a multiple detector embodiment of the invention may be the same or similar in construction to the detector illustrated in FIG. **3** or of other suitable constructions, some of which are described herein. In the case of a respiratory monitor, the breathing detectors should be arranged such that the patient's nose and mouth fall within the detection region of one or more of

the detectors. A typical number of detectors could be four to eight. An economically practical upper limit of individual assemblies would likely be **12**, although embodiments comprising more than **12** detectors are possible, depending upon the area requirements of the monitoring environment.

One embodiment of a respiratory monitor which employs multiple detectors is depicted in FIGS. **4**, **5** and **6**. This embodiment comprises six breathing detectors **17** each of which cast detection regions **18** onto image detection plane **19**. Referring to FIGS. **4**, **5** and **6**, detection regions **18** cumulatively define a detection or monitored environment in which infrared readings are taken by detectors **17**. These arrangements are not unique; other arrangements and quantities of detectors as well as geometries of the detection environments are possible, if not limitless. Generally, however, the size and shape of the environment as well as the size and condition of the patient (from newborn to adult) are factors considered when determining the parameters of the detector arrangement. Numerous configurations of detectors **17** are possible. Any member and configuration of detectors **17** may be utilized, although this choice may be dependent on the size and shape of the monitored environment desired, and the subject being analyzed.

The sensors used in the monitor work on the pyroelectric detection principle. Light impinging on the sensor's pyroelectric element produces a change in its temperature. This temperature change, in turn, produces an electric charge output. The charge is delivered to an impedance conversion device, which consists of a resistor to bleed charge and one or more field-effect transistors (FET) or other high-impedance, low-noise amplifiers. The impedance converter and amplifier are usually sealed within the same case as the pyroelectric element for reduction of electromagnetic interference (EMI). The output of the impedance converter and amplifier provides a voltage suitable for further amplification and signal processing.

When thin lens refractive optics are used to focus the infrared energy on the sensor, the size and shape of the sensor's element, along with the characteristics of the optics, will determine the size and shape of the patient sensing area. The pyroelectric element may be composed of one of several available materials including crystalline materials such as lithium tantalate and lead telluride, doped semi-conductor materials such as silicon or germanium, or specially formulated polymer films. Thus far the inventors' research has identified lithium tantalate as the most sensitive, stable, and cost-effective pyroelectric material. The pyroelectric element must be housed in a sealed environment and protected against external influences such as temperature variations, electromagnetic interference, and air-born contaminants. Furthermore, the pyroelectric element must be constructed so as to sense only specific wavelengths of infrared light. This may be accomplished by forcing incoming light to pass through an optical filter, which transmits only a specific band of infrared energy.

When considering the embodiment designed to detect changes in the presence of CO_2, the filter for the reference sensor passes infrared energy in about the 8 to about 14 micron range. This range of wavelengths will sense general changes in infrared emission (e.g. motion) without encroaching upon any CO_2 absorption peaks. The CO_2 sensor's filter passes energy in about the 14 to about 16 micron range. This covers the major 15.3 micron CO_2 absorption peak. The CO_2 sensor's filter may also pass infrared energy in about the 4.0 to about the 5.0 micron range which may include other CO_2 absorption peaks, such as the peak at 4.3 microns. Wavelengths in any desired range may also be included by the judicious selection of filter material However, the 14 to 16 micron range contains the most energy for detecting CO_2 in a relatively low temperature environment (between about 60° and about 100° F.). The amount of energy produced in about the 4.3 micron range by a blackbody radiator at room temperature is significantly less than that produced in the 14 to 16 micron range. Available energies are shown in Table 1 below for two CO_2 absorption bands, an H_2O absorption band, and a wide-range reference detection band. The last column shows the advantage of the longer wavelength CO_2 band by listing the ratio of the 14 to 16 and 4.19 to 4.45 micron bands.

TABLE 1

Available Energy For Several Infrared Bands, Including CO_2 and H_2O

	Comparison of Available Energy Through Various Spectral Windows (Watts/cm^2)				
Blackbody Temperature (°C.)	CO_2 (4.19–4.45 μm) [A]	H_2O (5.5–6.5 μm)	Wide-Range Motion (8–14 μm)	CO_2 (14–16 μm) [B]	Longer λCO_2 Advantage [B/A]
20 (68° F.)	0.755×10^{-4}	1.3×10^{-3}	1.53×10^{-2}	3.7×10^{-3}	49
25 (77° F.)	0.914×10^{-4}	1.5×10^{-3}	1.66×10^{-2}	4.0×10^{-3}	44
31 (87.8° F.)	1.140×10^{-4}	1.8×10^{-3}	1.81×10^{-2}	4.2×10^{-3}	37
34 (93.2° F.)	1.270×10^{-4}	2.0×10^{-3}	1.89×10^{-2}	4.3×10^{-3}	34

Referring now to FIG. **2** for the refractive optical embodiment of this invention and FIG. **7** for the combination reflective and refractive optical embodiment, filter **6** is usually placed between pyroelectric element **5** and lens **7** in a system using refractive optics (thin lens or Fresnel lens optics) or between pyroelectric element **5** and reflector components **21** in a reflective optic system. Filter **6** may be mounted directly to housing **22** of the pyroelectric sensor (as a window) or movably mounted along the optical path in the sensor module housing **9**. However, if optical filter **6** is placed close to element **5**, filter **6** can be made smaller in size and therefore less expensively. Materials used for the filter include doped silicon or germanium, the former being less expensive.

One embodiment of a refractive optic sensor module is shown in FIG. **2**. The module consists of pyroelectric element **5** in metal sensor housing **22** with optical infrared filter **6** placed as a window for admitting light to the element, fresnel lens **7**, plastic or metal module housing **9**, and thermally insulating material **8** around the housing for minimizing the effects of external ambient temperature changes.

To enhance the detection of the desired component signal and cancel the signal corresponding to energy from other sources, two sensors, the component and

reference sensors, are required to focus on the same area. This is known as convergent topology. The component sensor detects infrared energy in the absorption spectrum of the desired component, for example CO_2. The reference sensor detects infrared energy in a band near that of the component sensor but not including the energy of the component (e.g., CO_2). Enhanced signals may be attained by means of reflective, refractive, or a combination of reflective and refractive optics. FIG. 3 shows two sensor modules: reference sensor **11** and component sensor **13**. In this embodiment, sensor **11** detects a range of wavelengths with the exception of wavelengths corresponding to CO_2 absorption, and sensor **13** detects wavelengths corresponding to CO_2. The arrangement depicted in FIG. 3 represents a convergent topology in which the detection zones of each module, **12** and **14**, individually converge on image plane **15**. In the case of an apnea monitor, all patient activity must be contained within convergent region **23** for this topology to operate most accurately.

An optical system for collinear topology is shown in FIG. 7. Detector **26** contains both component (such as CO_2) and reference sensors **24** and **25** respectively. In FIG. 7, detector **26** is shown to consist of a common lens **7**, such as a nonlinear lens array, with partial mirror **21** to split the light to both reference sensor **25** and CO_2 sensor **24**. As shown in FIG. 8, both sensors always image the same area **27** regardless of sensor distance or orientation. This eliminates the need to maintain perfect convergence of two independent sensor modules as required by the convergent topology shown in FIG. 3. Thus, the collinear optical system is the preferred topology for the monitor of this invention.

For either of the topologies, each sensor produces a voltage signal proportional to the change in incident infrared energy of their respective bands. Referring again to FIGS. 1 and 2, the output of each sensor is independently passed to processing system **4**, where the undesired signals will be removed and further filtering will enhance the signal corresponding to the variation in the component to be monitored, for example, CO_2.

The sensitivity required to detect changes in infrared energy in bands such as CO_2 demands maximum optical as well as electronic sensitivity. The best method of increasing sensitivity while maintaining highest signal-to-noise ratio is to maximize the gain closest to the measurement point. To achieve this maximization, high-gain optics should be used. Potentially, reflective optics offer higher gain than do refractive optics (i.e., more light is delivered to the sensor element with reflective optics). This is due in part to lower absorption of the reflective elements and also to the ability of creating larger equivalent apertures compared with refractive elements.

Achieving wide-angle coverage of the area where the patient is being monitored, while also striving to maintain high light-gathering capacity, is difficult with thin-lens (refractive) optics. The aperture must remain wide to pass sufficient light. A practical limit is reached as the lens opening is enlarged since f-stops smaller than about 0.6 are not attainable with present technology. Achievable limits on a 0.9 inch focal length Fresnel lens is a diameter of about 1.5 inches. This yields an f-stop of about 0.6. A shorter focal length lens of the same diameter would actually admit less light. Another option for achieving wide-angle view using refractive optics is to enlarge the area of the pyroelectric sensing element. An achievable size of about 7 mm×7 mm for the pyroelectric yields an imaging area of about. 7.7 inches at a 25 inch subject distance with a 0.9 inch focal length Fresnel lens. With the same size pyroelectric element, an 0.5 inch focal length lens would yield about 14 inches of detection area. The lens diameter would decrease to about 0.83 inch diameter, which is about half of the light-gathering power.

FIGS. 2 and 3 show detectors using refractive optic elements for defining a detection region. Each embodiment employs a nonlinear lens array **7**. Alternatively, each embodiment shown in FIGS. 2 and 3 may be outfitted with reflective optics. It is also possible to create an optical system consisting of both refractive and reflective components as shown in FIGS. 7 and 8 for achieving a wide-angle view with high light-gathering power.

FIG. 9 illustrates a collinear sensor topology using only reflective optical elements. The broken lines in FIG. 9 depict the path which the infrared light follows as it is reflected from surface to surface prior to reaching the appropriate sensor. This embodiment comprises collinear detector **28** (of the type depicted in FIG. 7 except that there is no refractive lens at the opening to the detector) with sensor modules **24** and **25** and partial mirror **21** (but without nonlinear lens array **7**); parabolic (or other shaped) reflective surface **29**, which focuses surrounding infrared light; and mirror **30**, which in turn reflects infrared light into breathing detector **28**. Mirror **30** may be optionally linear or curved. As shown in FIG. 9, partial mirror **21** allows certain wavelengths to pass through to sensor module **25** while reflecting other wavelengths to sensor module **24**. Other combinations of nonlinear reflective surfaces are possible as well as combination of reflective and refractive elements. It is possible to design the reflective optical surfaces to reflect specific wavelengths so that part of the wavelength filtering may be performed in the optical components of the particular monitoring system.

Other non-imaging optics are potentially useful for the monitor of this invention since a well-focused optical image is not required. An integrating sphere used with a collimator or other reflective or refractive optical elements could provide wide-angle coverage with relatively high light-gathering power.

For all embodiments of this invention, the most accurate data collection will occur if the subject being monitored remains within the monitored environment during monitoring. One manner of assuring that the subject remains within the detection region is to constrain him in an enclosure. In the case of the apnea monitoring system, an enclosure may be utilized to confine the subject to the monitored environment. The enclosure may be open on the top, allowing for unobstructed breathing, a view of the outside, and a means by which the patient may interface with other persons. Many variations are possible for restraining the individual in a fixed area. Common examples may be beds, cribs, car seats, chairs and the like.

Processing system **4** of FIG. 1 receives and processes the signals from the reference and component sensors to produce a signal which corresponds to the desired information. FIG. 1 depicts processing system **4**. In the case of the apnea monitor, this system performs the following digital signal processing actions: sensor signal prefiltering and digitization, subtraction of the general reference signal from the component signal, frequency- and/or time-based analysis and parameters extraction of the resultant signal, comparison of the measured signals

with known signals from normal and abnormal patients, display of important system variables, interface with user input system (keyboard, switches, etc.), storage of data, and output of data to an external device. Some of these functions may be located locally in the sensor module(s). A communicator module may also be included that sends a distress signal to a remote location for indicating an apnea event to the caregiver. This communicator may call by telephone or transmit by radio-frequency or other medium to a remote indication module.

One embodiment of processing system **4** is depicted in block diagram form in FIGS. **10A**, **10B**, **10C** and **11D**. FIG. **10A** depicts a typical detector **1** which comprises a component sensor **11** and reference sensor **13**, preamplifiers **30** and **32**, filters/drivers **34** and **36**, and voltage regulator and filter **38** all of which generate the component and reference signals N, **40** and **42**, which are the input signals to main signal processor **50** shown in diagrammatic detail in FIGS. **10B** and **11**. Signal processor **50** comprises input buffers and amplifiers **52**, **54** and N_1, bandpass filters **56**, **58** and N_2, gain-stage amplifiers **60**, **62** and N_3, analog multiplexer **64**, analog-to-digital converter **66**, microprocessor system **68**, user interface and local alarm **70**, storage system for event analysis **72** and radio-frequency link to remote alarm device **74**.

Reference numbers N, N_1, N_2 and N_3, denote additional signals and components which would be included in the processing system for each additional detector **1** which is incorporated in any particular embodiment of the invention. In this embodiment of processing system **4**, each detector **1** would require a corresponding input signal N and components N_1, N_2 and N_3.

Microprocessor system **68** comprises digital signal processor **76**, microcontroller **78**, and memory device **80**. The basic logic utilized for this embodiment of microprocessor system **68** is depicted in the flow chart of FIG. **11**. Overlapping signals **100** from analog-to-digital converter **66** are assembled into a full signal at **102**, generating sensor signal **104**. Sensor signals **104** are reconstructed using neural networks or other processing algorithms to form true component signals **108** at **106**. Breathing parameters are extracted from true component signals **108** using wavelet analysis or similar means at **112** to generate signal **116**. Breathing patterns from signal **108** are matched with known anomalies at **114** to generate signals **118**. Signals **116** and **118** are processed using threshold, fuzz-logic, neural networks or similar processing technique at **120** to determine if an alarm or other desired output condition exists which is expressed and communicated by signal **122**.

FIG. **10C** depicts the power supply system used in one embodiment of the invention. Power supply system **90** comprises class **2** wall transformer **92**, power supply **94** and battery charger and battery system **96**.

Generally, processing system **4** derives a new signal or signals received from detector(s) **1**. Several methods for deriving the new signal(s) representing changes in the component substances being analyzed by the monitor may be enlisted. Such methods include simple mathematical subtraction, weighted subtraction, non-linear functions, artificial neural networks, fuzzy logic or a combination of these methods.

Simple mathematical subtraction may be accomplished by calculating the mathematical difference between the component and reference signals. The resultant value has a major portion of the non-component variations removed.

Weighted subtraction is similar to single subtraction except that either one of the sensor signals is multiplied by a weighting factor. The weighting factor is calculated by taking the ratio of both signals averaged over a selected time interval.

In the non-linear function method a mathematical function is derived such that, by its application to two or more unmodified sensor signals, the desired component is enhanced. The function may operate on one or more of the sensor signals or on all of them together. The function may contain non-linear mathematical equations, operators, or describing functions. A separate system of equations may be present to periodically tune the mathematical function so as to keep it current with the behavior of the sensors, environment, and electronics.

An artificial neural network (ANN) may be used to reconstruct a new signal based on two or more sensor signals. The ANN may consist of an input and an output layer of neurons, and may contain a hidden layer of neurons as needed to properly recreate the true component signal under a variety of situations and environmental conditions. Once the ANN is trained on numerous and varied examples, an accurately reconstructed signal can be derived even under many new conditions for which the ANN has not been specifically trained.

Fuzzy logic may be utilized within a system which comprises rules operating a fuzzy variable, derived from sensor signals, to obtain a new signal with motion and/or other undesirable features removed. This fuzzy-logic system is especially applicable to systems for which a specific mathematical model is difficult to derive.

The above-mentioned methods may be combined to create a system that derives a satisfactory representative signal of the component of interest.

In another embodiment of this invention, expired water vapor can be measured by the same or similar method used to measure expired CO_2. Like CO_2, H_2O absorbs infrared energy at particular wavelengths. A component sensor (in this embodiment the H_2O sensor) outfitted with an optical filter to pass wavelengths in about the 5.5 to 6.5 micron range allows detection of changes in water vapor. Patient motion can be removed by subtraction of the reference sensor signal (as in the case of CO_2) from the H_2O signal. The H_2O signal can be used as a reference signal that indicates the depth of breathing (i.e., the volume of expired air). If the H_2O sensor is used in conjunction with a CO_2 sensor, a derived signal, which is the ratio of the H_2O and CO_2 signals, can be used to track the concentration of CO_2 in the expired breath. The concentration of CO_2 will only change if the amount of CO_2 leaving the blood stream (into the lungs) has changed, which indicates a change in blood pH. H_2O concentration detectability provides the means for rapidly and continuously monitoring trends in blood pH levels.

A third pyroelectric sensor and H_2O band optical filter (acting in about the 5.5 to 6.5 micron range), would be all that is required to include the H_2O measurement with sensory systems described above. For the collinear optics system, a second mirror is required for a three-way split of the incoming light: one beam for CO_2 detection, one for H_2O detection, and one for reference.

In another embodiment of this invention, general body motion of a subject located in the monitored environment may be detected This motion may be in the form of micromotion. Such micromotion may be the chest movements of the subject which may signify breathing. However, any general body movement of the subject may be detected.

Unlike the foregoing embodiments, the device utilizes a single sensor, which may detect changes in infrared energy which signifies and corresponds to changes in micromotion of the subject. The sensor preferably comprises a pyroelectric crystal and optical filter which admits a selected range of infrared wavelengths. For detecting motion, such wavelengths are in about the 8 to about the 16 micron range. See Table 1 for the available energy for this infrared band. Upon detecting a change in micromotion, the sensor generates a first or input signal which is received by a processing system, which converts the input signal into a second or output signal. The output signal signifies the micromotion of the subject within the monitored environment. The output signal may signify any change in motion including an increase, decrease or absence of micromotion of the subject in the monitored environment. The processing system utilized in this embodiment may be similar to the processing system disclosed in FIGS. **10A**, **10B** and **10C**. The output signal can be used as the input signal to any desired output device such as a digital display or an audio alarm which would alert the caregiver or person monitoring the subject to a change in the subject's condition.

This motion detection embodiment may optionally be combined with an audio detection device similar to the wireless microphone devices now available for monitoring sounds of an infant in a remote area such as a nursery. The audio detector may be integrated with the motion detector wherein the audio detector comprises a microphone in operative communication with the monitored environment. The microphone should preferably be sensitive to and capable of detecting sound waves produced by barely audible sound in the monitored environment. Upon detection of the sound, the microphone produces an output signal to the motion detector's processing system, wherein the processing system is capable of converting and, as necessary, amplifying the microphone's output signal into a signal which signifies the sound present in the monitored environment. The converted signal may be fed to a speaker located within audible range of the caregiver or person monitoring the subject.

A set of experiments were performed to test the hypothesis that human breathing could be detected non-intrusively by measuring the absorption of CO_2 from exhaled breath in an infrared energy field. Gaseous CO_2 has known absorption peaks in the infrared energy spectrum between about 4 and 16 microns. By measuring the changes in energy level at one or more of these absorption bands due to changes in CO_2 from exhaled breath, breathing can be detected and measured. The component sensor (in this case the CO_2 sensor) is also sensitive to changes in the infrared energy level due to motion. A second sensor, the reference sensor, detects a wider energy spectrum, which includes the motion of the patient, and provides a "background" motion signal which can be subtracted from the CO_2 signal to obtain a "CO_2" only signal.

The natural infrared energy emanating from the subject provided the passive infrared energy source. A detector assembly, consisting of two pyroelectric detectors, each embedded in a block of polystyrene for temperature stability, was constructed. One detector had about a 14.2 to 16 micron transmissive CO_2 filter and the other had a wide 8 to 14 micron transmissive "motion" filter. Both sensors were adjusted to be convergent on the same area. The CO_2 sensor was very sensitive to changing CO_2 concentrations in the path between the infrared source (the subject) and the detector but is also sensitive to motion. The reference sensor was sensitive to general motion only. As both sensors are sensitive to motion, the motion component could be then "subtracted" from the CO_2 signal, yielding a signal dependent only upon CO_2 concentration changes.

The detector assembly was placed **31** inches above the subject's face. All data were gathered with the subject looking into the detector assembly. Each sensor was adjusted so that it imaged an area about 10 sq. in. about the subject's mouth and nose.

The subject was an adult male, age 43, in good physical condition. For a typical breath, the average adult male has an inspired and expired volume (tidal volume) of 500 ml, with a neonate's tidal volume being as small as 8–10% of this volume (40 to 50 ml). The experiment was conducted with the subject inspiring and expiring a volume of between 29 and 69 ml with an average of 46 ml, approximating that of neonate.

FIG. **12** graphically depicts the data corresponding to the experimental results. The graphs are divided into columns and rows. Each column represents a signal, either directly from a sensor or mathematically derived from one or more sensor signals. Each row represents a condition under which data were taken. A description of each column is as follows:

TABLE 2

Column #	Variable Name	Variable
A	CO_2	Filtered signal from CO_2 sensor
B	Motion	Filtered signal from reference motion
C	CO_2 - Motion	CO_2 Motion signal
D	CO_2 vs Motion	CO2 signal plotted against Motion signal
E	Threshold	Threshold signal where CO_2 - Motion signal is above a predetermined threshold value

The CO_2 and Reference signals have been filtered to remove high frequency noise. The signal of interest is the CO_2—Motion signal. Column D, the plot of CO_2 against Motion, is an indication of the correlation of the two variables. Highly correlated data would show up as a diagonal plot. The CO_2 and the Motion signals should not normally be correlated, unless they are both measuring large amounts of motion.

Data was taken under various conditions. Each condition is a row number in FIG. **12** ranging from 0 to 5. The conditions are given in the following table.

TABLE 3

Row #	CONDITION
0	Breathing every 5 sec.
1	Breathing every 2 sec.
2	Breathing every 2 sec. for 28 sec., followed by 30 sec. with no breathing
3	Breath held, slight movement of head side to side (for motion cancellation)
4	Side to side motion, no breathing, external CO_2 every 5 sec.

TABLE 3-continued

Row #	CONDITION
5	Sensor noise, no subject in field of view

Column E, the threshold signal, graphically represents the results of each condition under which data was taken. Here, each occurrence of breath is represented by two closely spaced vertical lines, one for the CO_2—Motion signal going below the negative threshold and one for the signal recrossing the negative threshold. Accordingly, the results of this analysis illustrates that breathing, approximating that of a neonate, could be consistently and correctly non-intrusively detected.

The present invention may be embodied in other specific forms without departing from its spirit or essential attributes. Accordingly, reference should be made to appended claims rather than the foregoing specification, as indicating the scope of the invention.

What is claimed is:

1. A passive, non-invasive, non-contacting apparatus for monitoring the respiration of a subject in a monitored environment, comprising:

first sensor means for operative communication with said monitored environment, said first sensor means detecting changes in infrared energy signifying and corresponding to changes in a concentration in said monitored environment of a component to be monitored, said first sensor mans generating a first signal, wherein said first sensor means includes a first pyroelectric crystal and a first optical filter which filter admits infrared energy in a range of between about 14 to about 16 microns;

second sensor means for operative communication with said monitored environment, said second sensor means detecting changes in infrared energy signifying reference infrared energy in said monitored environment, said second sensor means generating a second signal, wherein said second sensor means includes a pyroelectric crystal and an optical filter which admits a selected range of infrared wavelengths; and

processing means for converting said first and second signals into a third signal, said third signal signifying a change in the concentration of said monitored component in said monitored environment.

2. A passive, non-invasive, non-contacting apparatus for monitoring the respiration of a subject in a monitored environment, comprising:

first sensor means for operative communication with said monitored environment, said first sensor means detecting changes in infrared energy signifying and corresponding to changes in concentration in said monitored environment of a component to be monitored, said first sensor means generating a first signal;

second sensor means for operative communication with said monitored environment, said second sensor means detecting changes in infrared energy signifying reference infrared energy in said monitored environment, said second sensor means generating a second signal;

processing means for converting said first and second signals into a third signal and produces an output, said third signal signifying a change in the concentration of the monitored component in the monitored environment;

a filter operatively associated with said processing means;

a digital processor operatively associated with said filter, wherein said digital processor enhances said output of said processing means; and

analyzer means operatively coupled to said processing means, said analyzer means converting into real time the enhanced output of said processing means to produce a signal which signifies and corresponds to a respiration rate and relative respiration intensity of a subject within the monitored environment.

3. A non-invasive, non-contacting apparatus for determining changes in amounts of respiratory gases present in a predetermined spatial volume intermediate said apparatus and a surface by detection of infrared energy which is passively emitted by said surface or present in said volume and transits said volume to said apparatus, comprising:

first sensor means, adapted to be disposed at a distance from said surface, for receiving infrared energy which is emitted by said surface or present in said volume and transits said volume to said first sensor means, and for producing a first electrical signal which is responsive to changes in the received infrared energy in a first range of wavelengths including wavelengths to which a respiratory gas of interest is responsive;

second sensor means, adapted to be disposed at a distance from said surface, for receiving infrared energy which is emitted by said surface or present in said volume and transits substantially the same volume as the infrared energy received by said first sensor means to said second sensor means, and for producing a second electrical signal which is responsive to changes in the received infrared energy in a second range of wavelengths wherein said second range of wavelengths substantially differs from said first range of wavelengths; and

processing means responsive to said first and second electrical signals for producing a third electrical signal representing a change in the amount of said respiratory gas of interest in said volume, said processing means further comprising means for compensating said first electrical signal by said second electrical signal so as to reduce effects on said third signal of changes in the infrared emissions of said surface or present in said volume.

4. Apparatus according to claim 3, wherein said second range of wavelengths is substantially outside of said first range of wavelengths to which the respiratory gas of interest is responsive.

5. Apparatus according to claim 3, wherein said first and second ranges of wavelengths are substantially distinct.

6. Apparatus according to claim 3, wherein said first and second ranges of wavelengths are substantially the same except for wavelengths to which said respiratory gas is responsive.

7. Apparatus according to claim 3, wherein said second range of wavelengths substantially includes said first range of wavelengths and wavelengths outside said first range of wavelengths.

8. Apparatus according to claim 3, wherein said respiratory gas of interest is CO_2 and said first range of wavelengths includes wavelengths at which CO_2 is absorptive.

9. Apparatus according to claim 8, further comprising a third sensor means, adapted to be disposed at a dis-

tance from said surface, for receiving infrared energy emitted by said surface or present in said volume and wherein said infrared energy transits substantially the same volume as the infrared energy received by said first and second sensor means, and for providing a fourth electrical signal in a third range of wavelengths at which H_2O is absorptive.

10. Apparatus according to claim **3**, wherein said respiratory gas of interest is H_2O and said first range of wavelengths includes wavelengths at which H_2O is absorptive.

11. Apparatus according to claim **3**, wherein said respiratory gas of interest is a gas selected from the group consisting of a ketone, amino acid, insulin, and pintane, and said first range of wavelengths including wavelengths in which said selected gas is absorptive.

12. Apparatus according to claim **3**, wherein said first and second sensor means each comprise an infrared sensor and optical means for restricting infrared energy impinging on said infrared sensor to infrared energy emitted by said surface.

13. Apparatus according to claim **12**, wherein said optical means includes an aperture.

14. Apparatus according to claim **12**, wherein said optical means includes a lens.

15. Apparatus according to claim **13**, wherein said optical means includes a mirror.

16. Apparatus according to claim **3**, wherein said first or second sensor means includes a bandpass filter.

17. Apparatus according to claim **3**, wherein said first or second sensor means includes a bandstop filter.

18. Apparatus according to claim **3**, wherein said processing means includes means for producing said third electrical signal as a function of the difference between said first and second electrical signals.

19. Apparatus according to claim **3**, wherein said processing means further comprises means for producing said third electrical signal by means of applying non-linear mathematical functions to said first or second electrical signals.

20. Apparatus according to claim **3**, wherein said processing means further comprises means for providing said third electrical signal by means of an artificial neural network or fuzzy logic system.

21. Apparatus according to claim **3**, further comprising a set of sensor means each having said means set forth for said first sensor means, wherein each member of said set produces an electrical signal which is responsive to received infrared energy in a range of wavelengths to which a different respiratory gas is responsive.

22. A non-invasive, non-contacting method for determining changes in amounts of respiratory gases present in a predetermined spatial volume intermediate an apparatus and a surface by detection of infrared energy which is passively emitted by said surface or present in said volume and transits said volume to said apparatus, said method comprising the steps of:

receiving said infrared energy emitted by said surface or present in said volume and transiting said volume for receipt by a first sensor means adapted to be disposed at a distance from said surface;

producing a first electrical signal which is responsive to changes in said received infrared energy in a first range of wavelengths including wavelengths to which a respiratory gas of interest is responsive;

receiving infrared energy emitted by said surface or present in said volume, wherein said infrared energy transits substantially the same volume as the infrared energy received by said first sensor means for receipt by a second sensor means adapted to be disposed at a distance from said surface;

producing a second electrical signal which is responsive to changes in the infrared energy received by said second sensor means in a second range of wavelengths wherein said second range of wavelengths substantially differs from said first range of wavelengths; and

processing said first and second electrical signals to produce a third electrical signal said third signal representing a change in the amount of said respiratory gas of interest in said volume, and compensating said first electrical signal by said second electrical signal so as to reduce effects on said third signal of changes in the infrared emissions of said surface and volume.

23. The method of claim **22**, wherein said respiratory gas of interest is CO_2 and said first range of wavelengths includes wavelengths at which CO_2 is absorptive.

24. The method of claim **22**, wherein said respiratory gas of interest if H_2O and said first range of wavelengths includes wavelengths at which H_2O is absorptive.

25. The method of claim **22**, wherein said respiratory gas of interest is a gas selected from the group consisting of a ketone, amino acid, insulin and pintane and said first range of wavelengths includes the wavelengths at which said selected gas is absorptive.

* * * * *