US 20120025199A1

(19) United States

(12) Patent Application Publication

Chen et al.

(10) Pub. No.: US 2012/0025199 A1

(43) Pub. Date: Feb. 2, 2012

(54) IMAGE SENSOR WITH DEEP TRENCH ISOLATION STRUCTURE

(75) Inventors: **Szu-Ying Chen**, Taichung City (TW); **Chun-Chieh Chuang**, Tainan City (TW); **Jen-Cheng Liu**, Hsin-Chu City (TW); **Dun-Nian Yaung**, Taipei City (TW)

(73) Assignee: **Taiwan Semiconductor Manufacturing Company, Ltd.**, Hsin-Chu (TW)

(21) Appl. No.: **12/844,642**

(22) Filed: **Jul. 27, 2010**

Publication Classification

(51) **Int. Cl.**

H01L 31/02	(2006.01)
H01L 31/0264	(2006.01)
H01L 31/0376	(2006.01)
H01L 31/18	(2006.01)

(52) **U.S. Cl.** **257/75**; 257/460; 438/96; 257/E31.004; 438/98; 257/E31.047; 257/E31.11

(57) **ABSTRACT**

Provided is a back side illuminated image sensor device. The image sensor device includes a substrate having a front side and a back side opposite the front side. The image sensor also includes a radiation-detection device that is formed in the substrate. The radiation-detection device is operable to detect a radiation wave that enters the substrate through the back side. The image sensor further includes a deep trench isolation feature that is disposed adjacent to the radiation-detection device. The image sensor device further includes a doped layer that at least partially surrounds the deep trench isolation feature in a conformal manner.

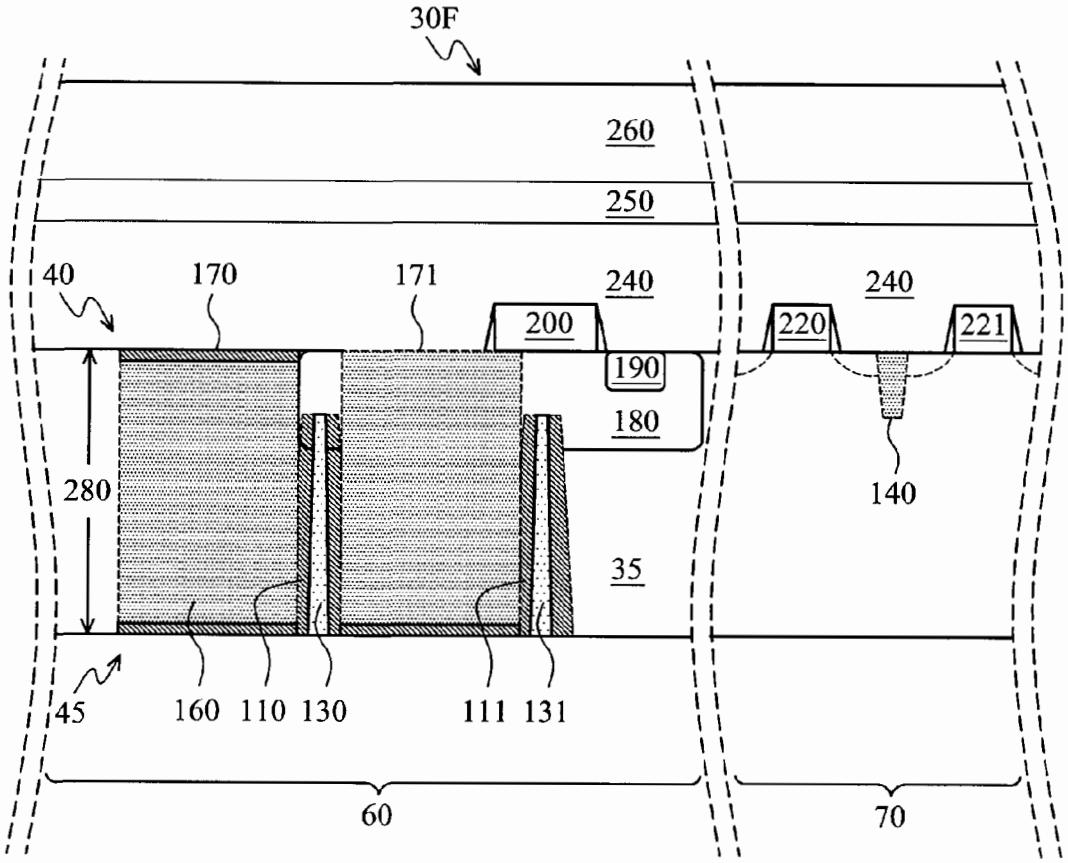

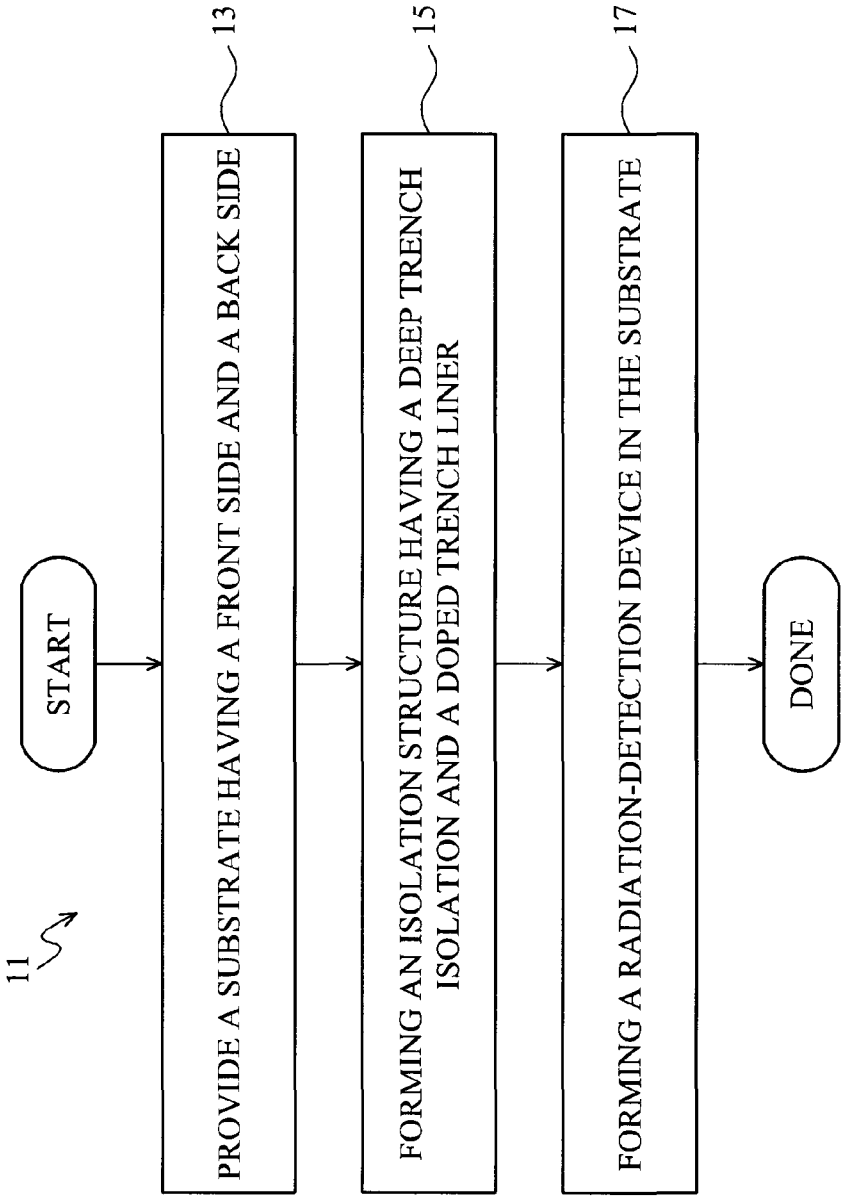
11
START
13
PROVIDE A SUBSTRATE HAVING A FRONT SIDE AND A BACK SIDE
15
FORMING AN ISOLATION STRUCTURE HAVING A DEEP TRENCH ISOLATION AND A DOPED TRENCH LINER
17
FORMING A RADIATION-DETECTION DEVICE IN THE SUBSTRATE
DONE

Fig. 1

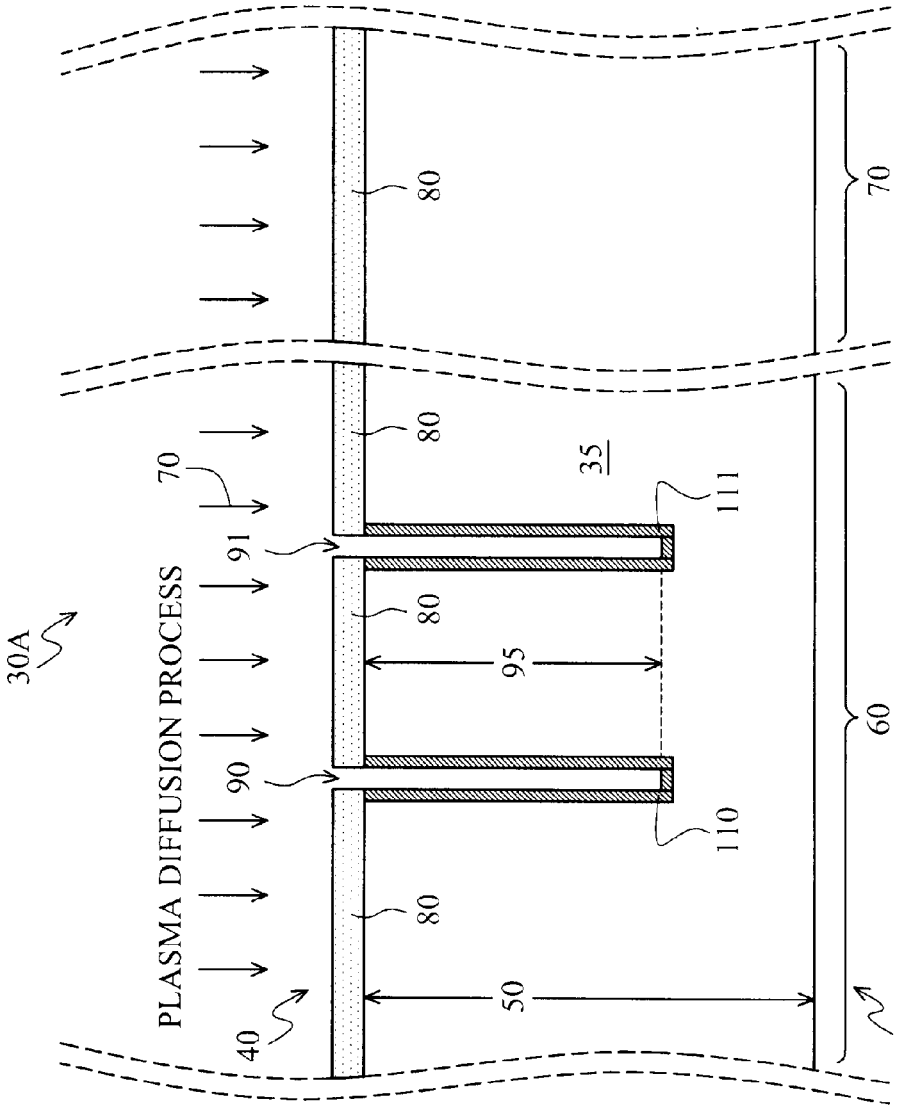
30A
PLASMA DIFFUSION PROCESS
70
91
90
40
80
80
80
80
35
95
50
111
110
60
70
45

Fig. 2

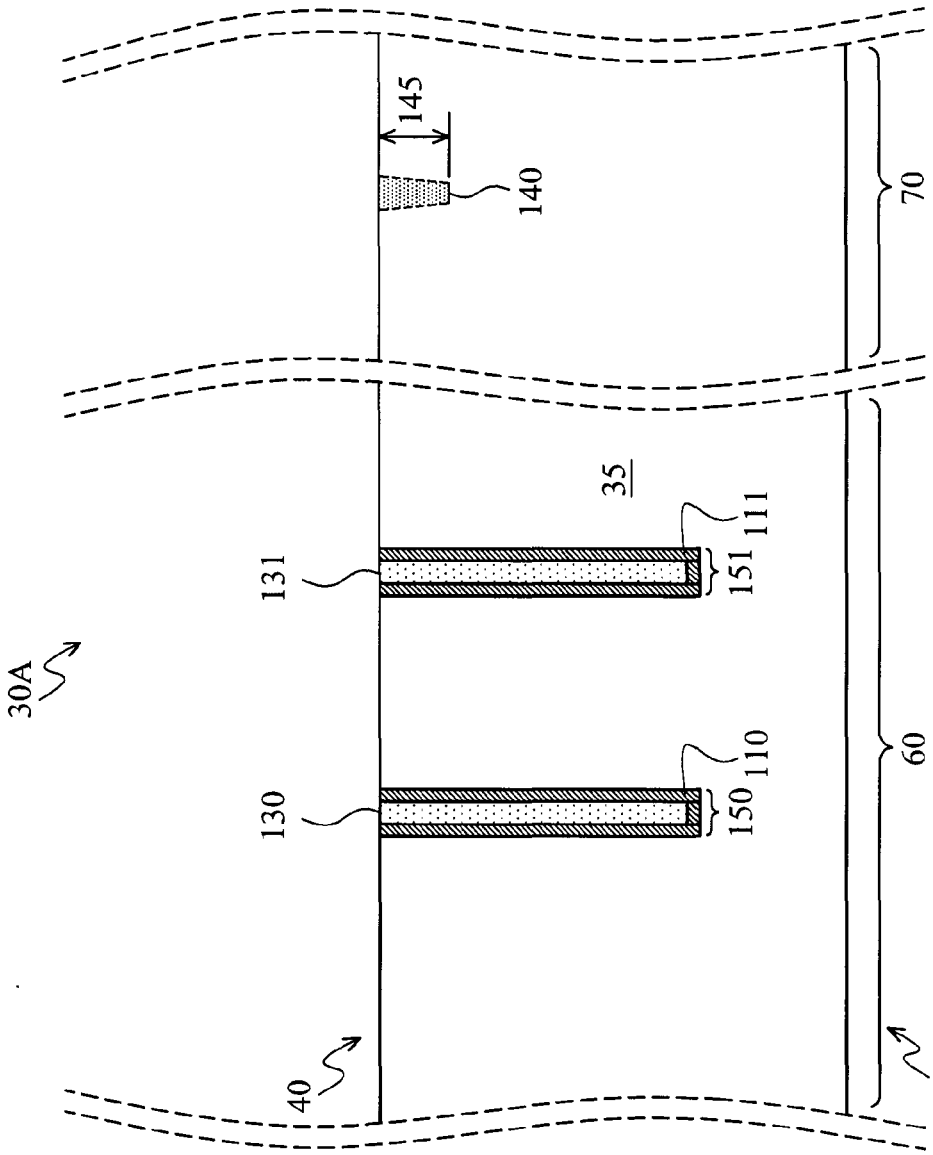

Fig. 3

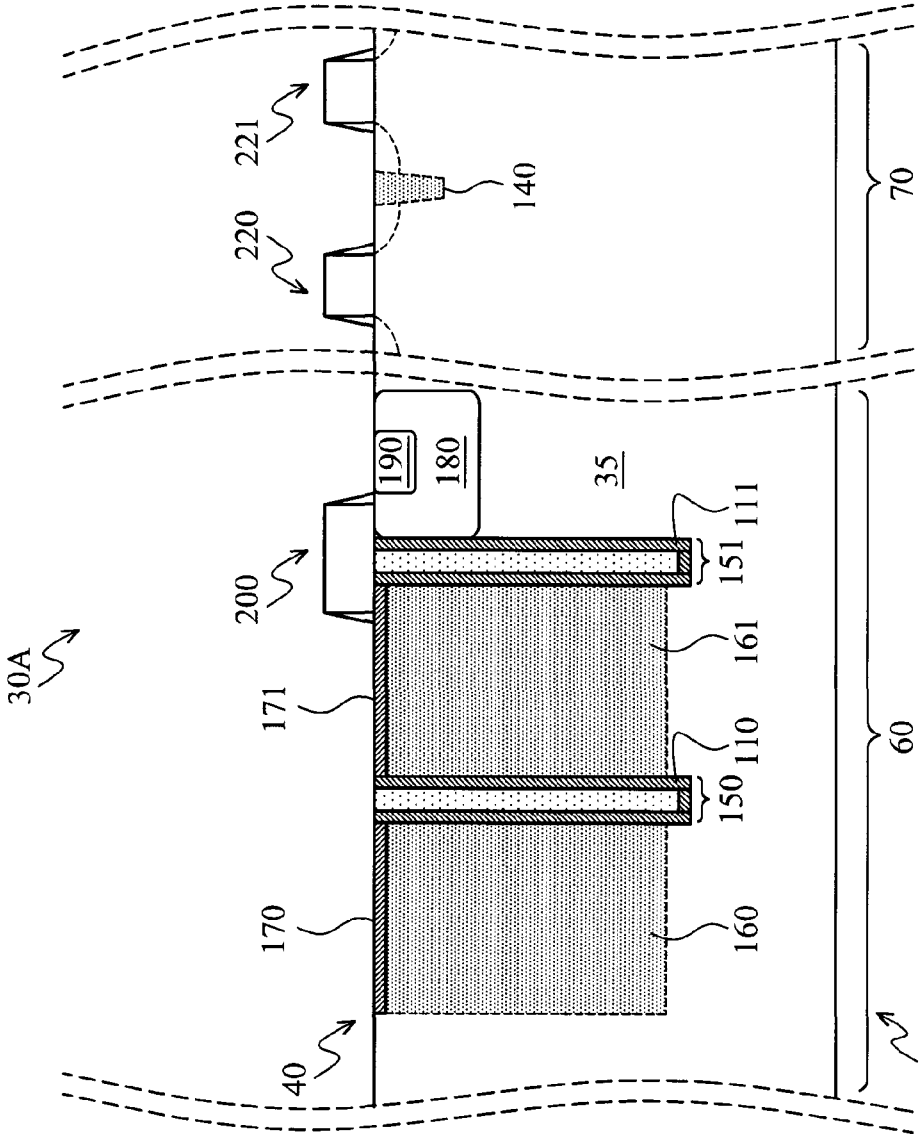
30A
221
220
200
171
170
40
190
180
35
140
111
151
161
110
150
160
70
60
45

Fig. 4

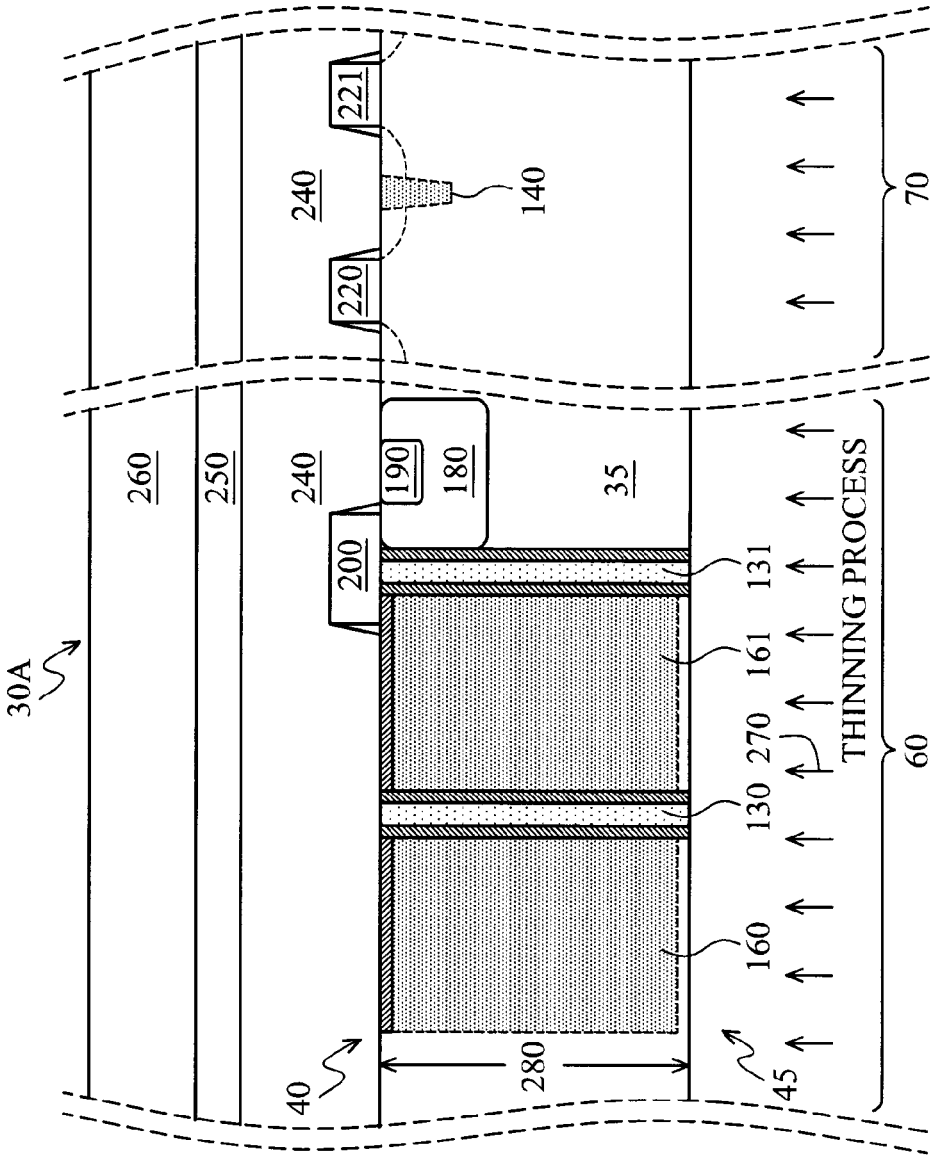
30A
260
250
240
200
190
180
35
221
220
240
140
131
161
270
130
160
THINNING PROCESS
60
70
40
280
45

Fig. 5

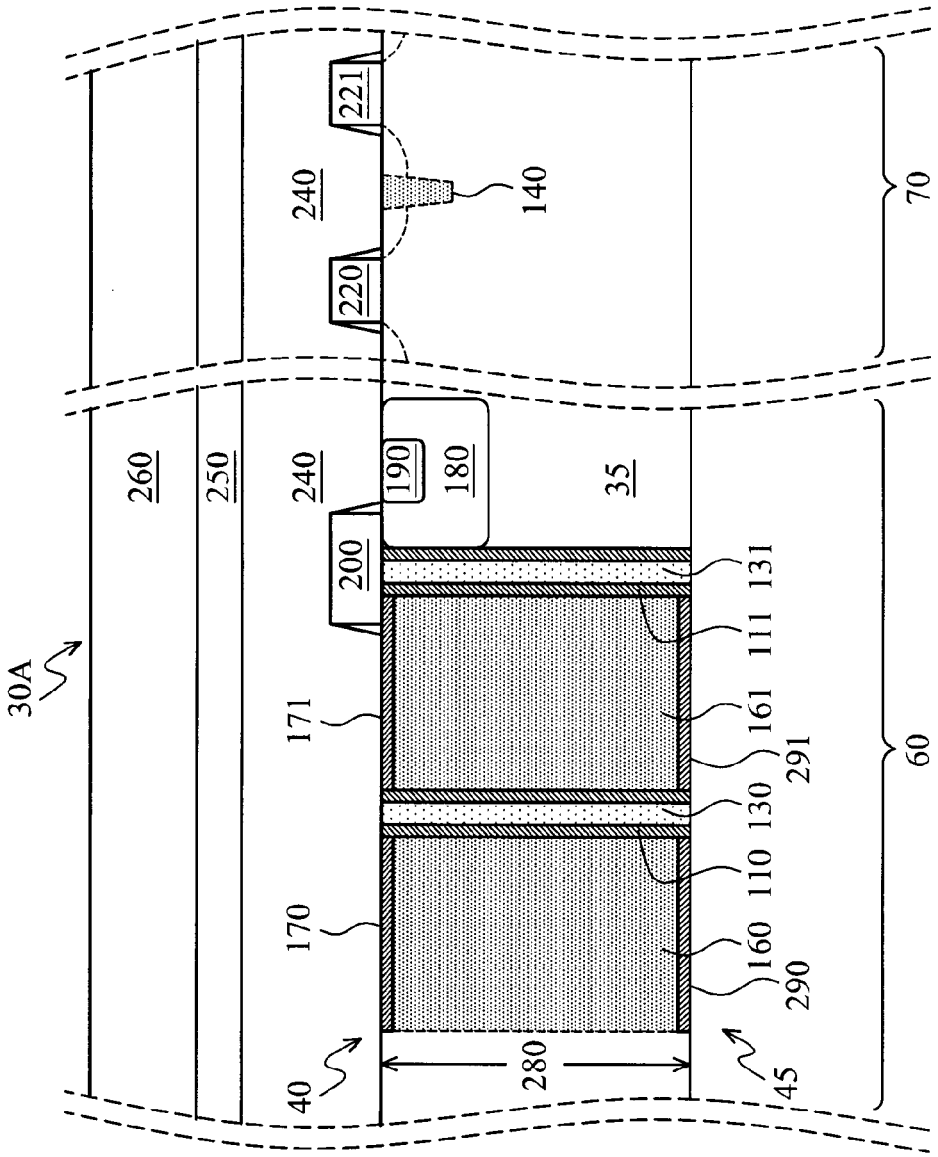
30A
260
250
240
200
190
180
35
221
220
140
70
131
111
161
291
130
110
160
290
171
170
40
280
45
60

Fig. 6

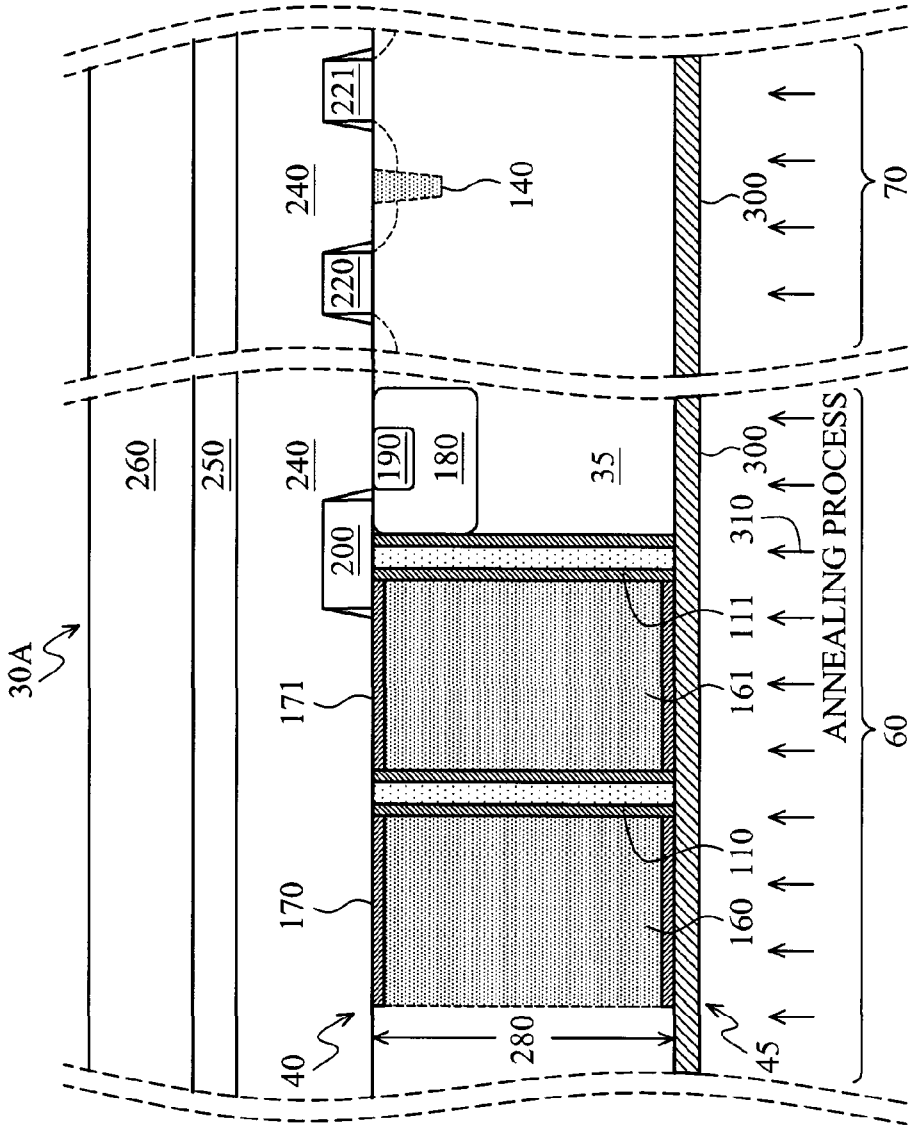
30A
260
250
240
221
220
140
300
70
240
190
180
35
200
300
310
ANNEALING PROCESS
111
161
171
60
110
170
160
40
280
45

Fig. 7

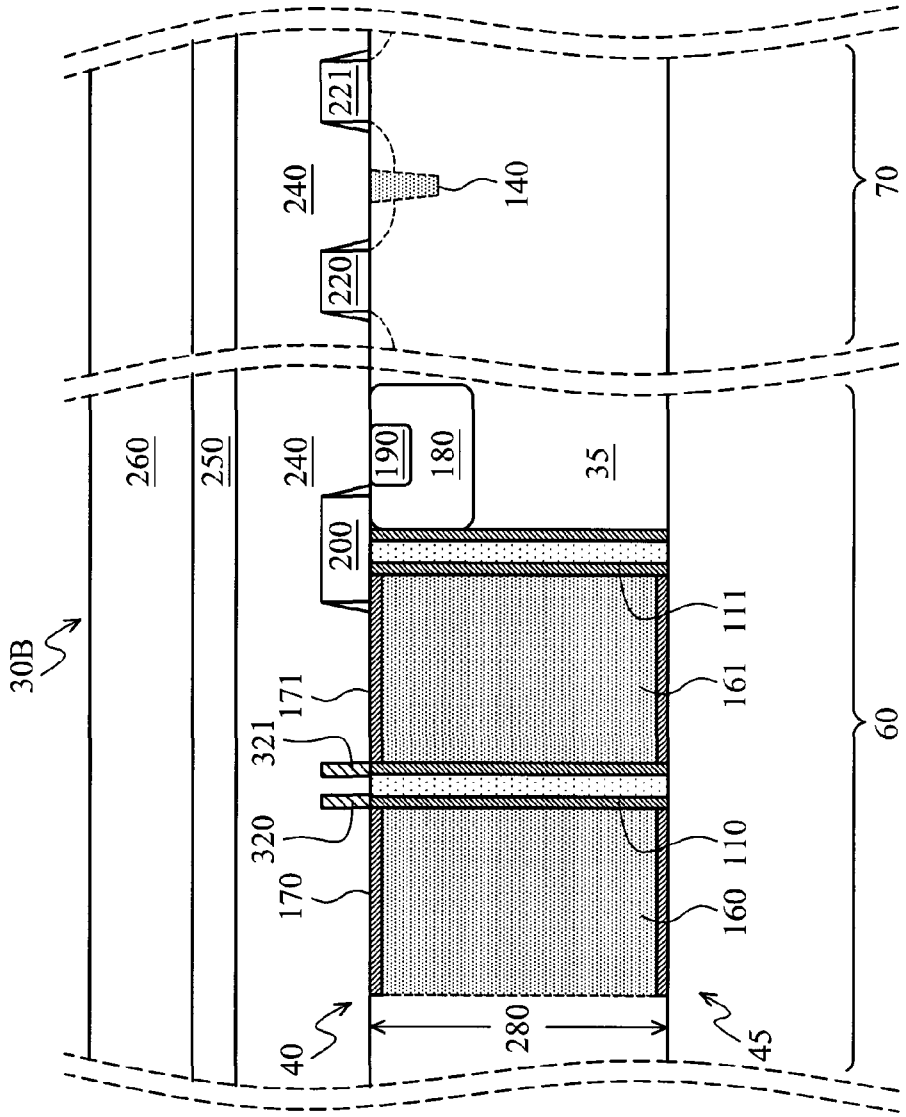
30B
260
250
240
240
221
220
140
70
190
180
35
200
111
161
171
321
320
170
110
160
60
40
280
45

Fig. 8

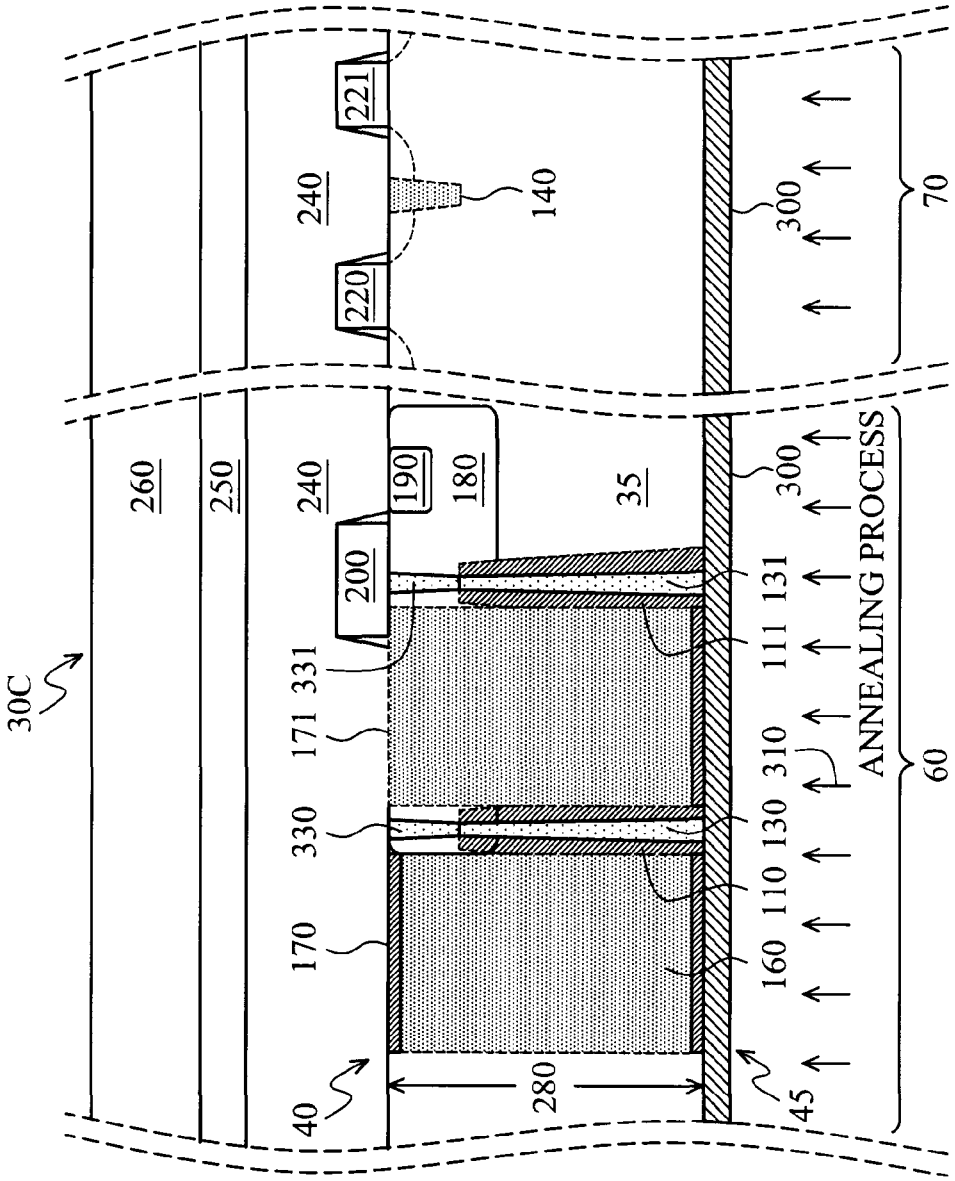
30C
260
250
240
221
220
140
300
70
190
180
35
200
331
171
330
170
40
280
45
160
110
130
310
111
131
ANNEALING PROCESS
60

Fig. 9

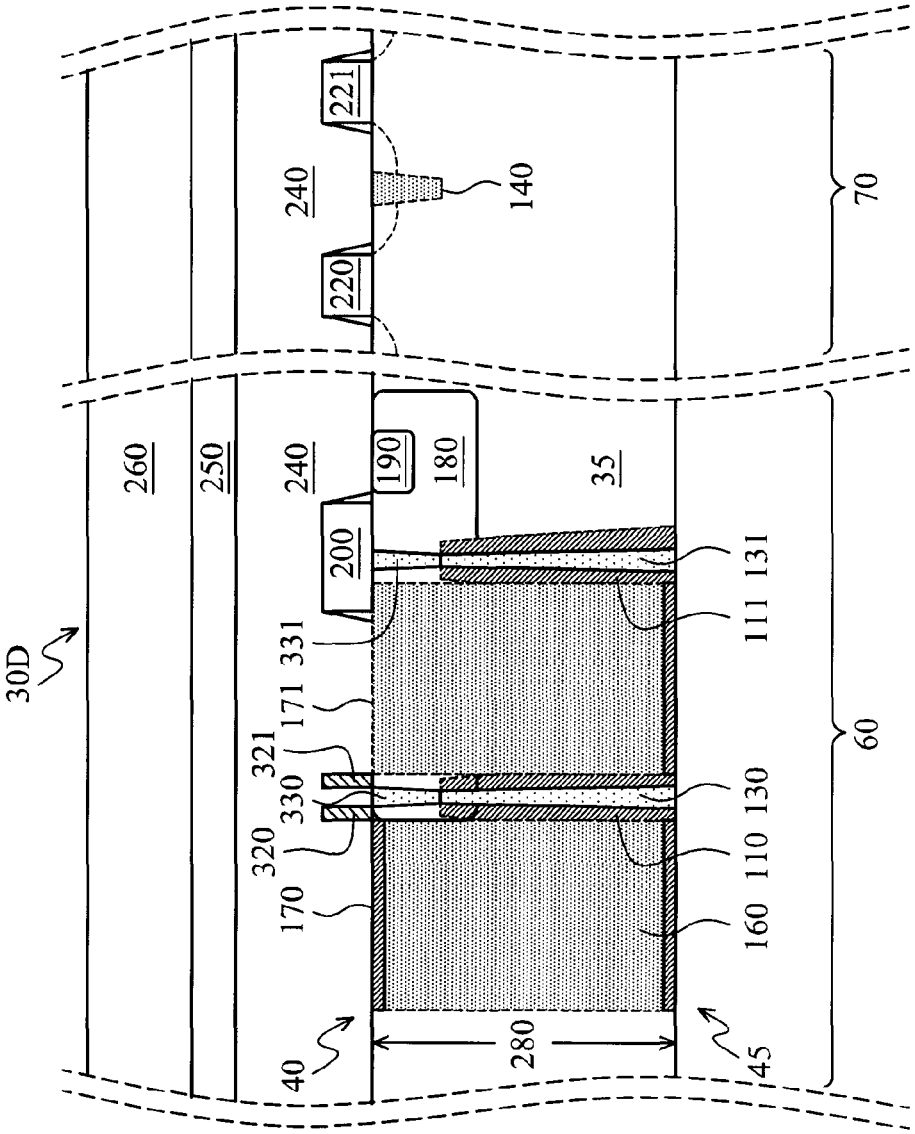
30D
260
250
240
221
220
140
70
190
180
35
200
331
171
321
330
320
170
131
111
130
110
160
60
40
280
45

Fig. 10

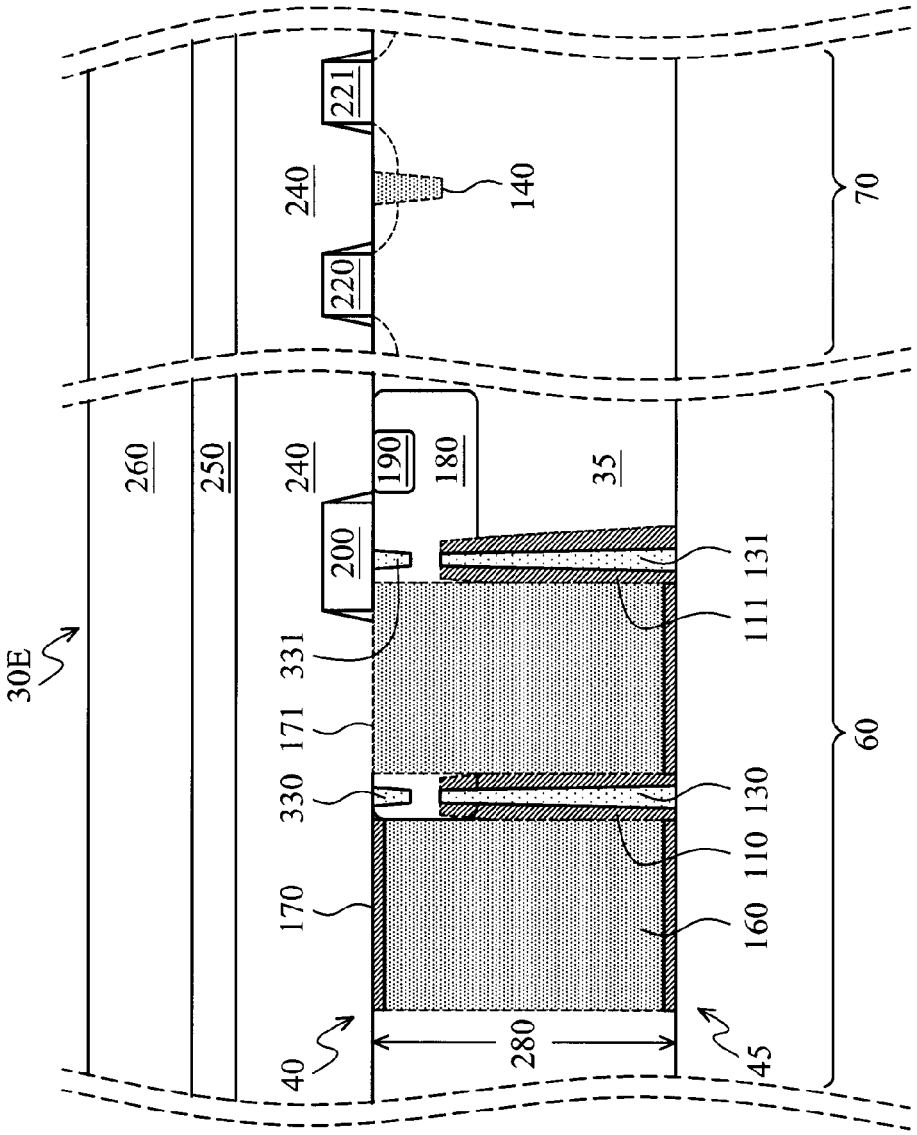
30E
260
250
240
190
180
35
200
221
220
240
140
70
60
331
171
330
170
111
131
130
110
160
40
280
45

Fig. 11

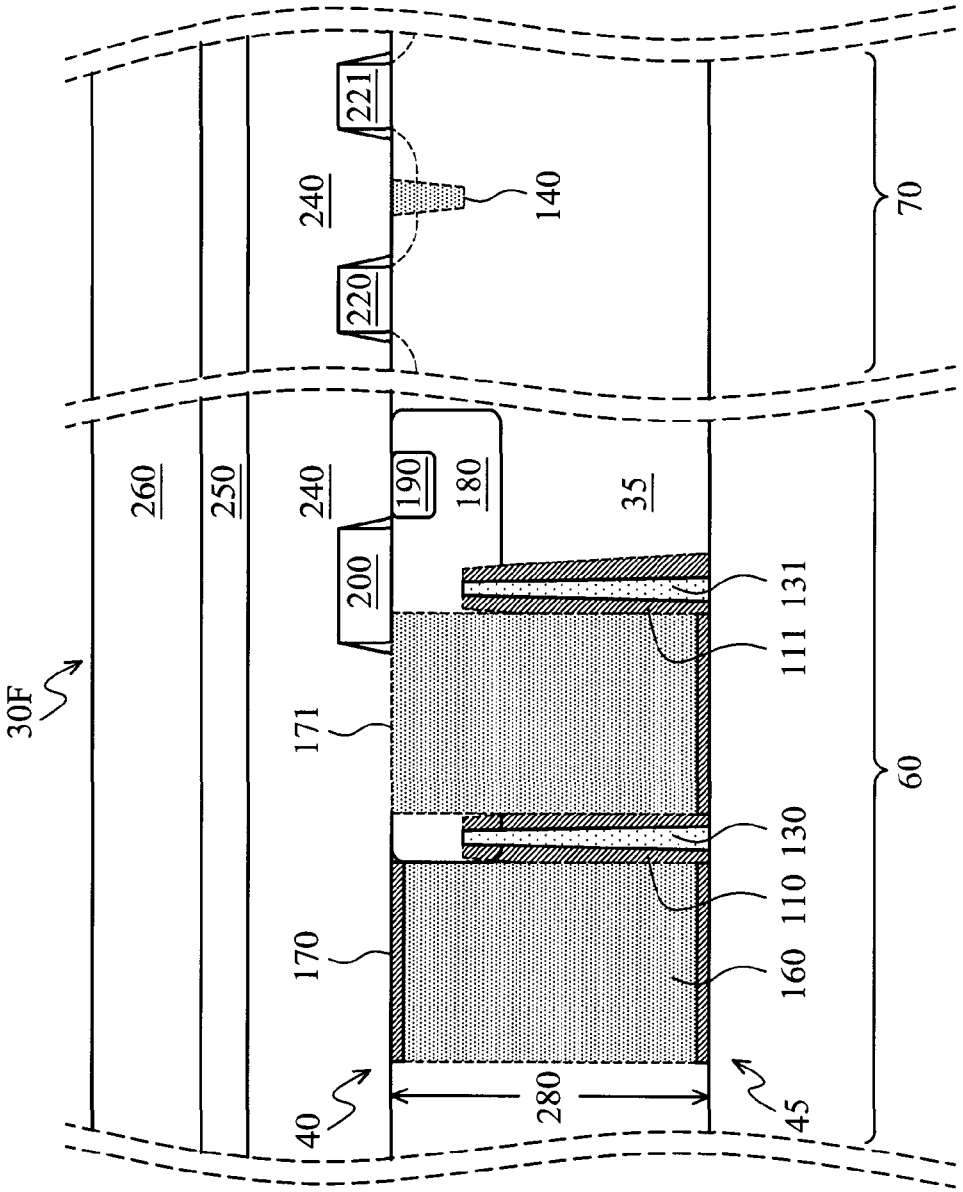
30F
260
250
240
200
190
180
35
221
220
140
70
171
170
131
111
130
110
160
60
40
280
45

Fig. 12

IMAGE SENSOR WITH DEEP TRENCH ISOLATION STRUCTURE

BACKGROUND

[0001] Semiconductor image sensors are used for sensing light. Complementary metal-oxide-semiconductor (CMOS) image sensors (CIS) and charge-coupled device (CCD) sensors are widely used in various applications such as digital still camera or mobile phone camera applications. These devices utilize an array of pixels in a substrate, including photodiodes and transistors, that can absorb radiation projected toward the substrate and convert the sensed radiation into electrical signals.

[0002] A back side illuminated (BSI) image sensor device is one type of image sensor device. As transistor device size shrinks with each technology generation, existing BSI image sensor devices may begin to suffer from issues related to cross-talk and blooming. These issues may be caused by insufficient isolation between neighboring pixels of the BSI image sensor.

[0003] Therefore, while existing methods of fabricating BSI image sensor devices have been generally adequate for their intended purposes, they have not been entirely satisfactory in every aspect.

BRIEF DESCRIPTION OF THE DRAWINGS

[0004] Aspects of the present disclosure are best understood from the following detailed description when read with the accompanying figures. It is emphasized that, in accordance with the standard practice in the industry, various features are not drawn to scale. In fact, the dimensions of the various features may be arbitrarily increased or reduced for clarity of discussion.

[0005] FIG. **1** is a flowchart illustrating a method for fabricating an image sensor device according to various aspects of the present disclosure;

[0006] FIGS. **2-7** are diagrammatic fragmentary cross-sectional side views of an image sensor device at various stages of fabrication in accordance with an embodiment of the method illustrated in FIG. **1**.

[0007] FIGS. **8-12** are diagrammatic fragmentary cross-sectional side views of respective image sensor devices at a stage of fabrication in accordance with various alternative embodiments of the method illustrated in FIG. **1**.

DETAILED DESCRIPTION

[0008] It is to be understood that the following disclosure provides many different embodiments, or examples, for implementing different features of the invention. Specific examples of components and arrangements are described below to simplify the present disclosure. These are, of course, merely examples and are not intended to be limiting. Moreover, the formation of a first feature over or on a second feature in the description that follows may include embodiments in which the first and second features are formed in direct contact, and may also include embodiments in which additional features may be formed interposing the first and second features, such that the first and second features may not be in direct contact. Various features may be arbitrarily drawn in different scales for the sake of simplicity and clarity.

[0009] Illustrated in FIG. **1** is a flowchart of a method **11** for fabricating a back-side illuminated (BSI) image sensor device according to various aspects of the present disclosure. Referring to FIG. **1**, the method **11** begins with block **13** in which a substrate having a front side and a back side is provided. The method **11** continues with block **15** in which an isolation structure is formed in the substrate. The substrate includes a deep trench isolation device and a doped trench liner that at least partially surrounds the deep trench isolation device. The method **11** continues with block **17** in which a radiation-detection device is formed in the substrate. The radiation-detection device is operable to sense radiation projected toward the radiation-detection device from the back side. It is understood that additional processes may be performed before the block **13** or after block **17**, or in between the blocks **13**, **15**, and **17** to complete the fabrication of the image sensor device.

[0010] FIGS. **2** to **7** are diagrammatic fragmentary cross-sectional side views of a portion of a BSI image sensor device **30**A at various fabrication stages according to an embodiment of the method **11** of FIG. **1**. It is understood that FIGS. **2** to **7** have been simplified for a better understanding of the inventive concepts of the present disclosure.

[0011] Referring to FIG. **2**, the image sensor device **30**A includes a substrate **35**, also referred to as a device substrate. The substrate **35** is a silicon substrate doped with a P-type dopant such as boron, in which case the substrate **35** is a P-type substrate. Alternatively, the substrate **35** could be another suitable semiconductor material. For example, the substrate **35** may be a silicon substrate that is doped with an N-type dopant such as phosphorous or arsenic, in which case the substrate **35** is an N-type substrate. The substrate **35** may include other elementary semiconductors such as germanium and diamond. The substrate **35** may optionally include a compound semiconductor and/or an alloy semiconductor. Further, the substrate **35** may include an epitaxial layer (epi layer), may be strained for performance enhancement, and may include a silicon-on-insulator (SOI) structure.

[0012] The substrate **35** has a front side **40** and a back side **45**. The front side **40** may also be referred to as a front surface, and the back side **45** may also be referred to as a back surface. The substrate **35** has an initial thickness **50** that is in a range from approximately 100 microns (um) to approximately 3000 um. In an embodiment, the initial thickness **50** is approximately 700 um.

[0013] The substrate **35** includes various regions, which may include a pixel-array region, a periphery region, a bonding pad region, and a scribe line region. For the sake of simplicity, only a portion of the pixel-array region **60** (also referred to as the pixel region) and the periphery region **70** are shown in FIG. **2**. The pixel-array region **60** is where arrays of radiation-sensing pixels are to be formed. The periphery region **70** is where non-radiation-sensing devices are formed, such as digital devices or control devices. The devices formed in the pixel-array region **60** and the periphery region **70** will be discussed in more detail later.

[0014] A patterned hard mask layer **80** is then formed over the front side **40** of the substrate **35**. The patterned hard mask layer **80** may be formed by first forming a hard mask material over the front side **40** using a deposition process known in the art, such as a chemical vapor deposition (CVD) process, a physical vapor deposition (PVD) process, or an atomic layer deposition (ALD) process. The hard mask material is then patterned in a photolithography process that may involve a photoresist material (not illustrated) and various exposure, developing, baking, stripping, and etching processes. As a result, the patterned hard mask layer **80** is formed.

[0015] The patterned hard mask layer **80** has openings **90** and **91** therein. These openings **90** and **91** are etched further into the pixel-array region **60** of the substrate **35** to form deep trenches **90** and **91**, for example by using a dry etching process known in the art. The patterned hard mask layer **80** serves as a protective mask during the etching process. The deep trenches **90-91** have a depth **95** that is in a range from approximately 1 micron (um) to approximately 3 um. The deep trenches **90-91** may have approximately rectangular shapes, trapezoidal shapes, elongated elliptical shapes, or other suitable shapes.

[0016] A plasma diffusion process **100** is then performed on the deep trenches **90** and **91** while using the patterned hard mask layer **80** as a protective mask. The plasma diffusion process **100** may involve a plasma-immersion ion implantation, and may achieve a dopant depth in a range from about 500 angstroms to about 2500 angstroms, and a dosage range in a range from about 1E10 ions/cm^2 to about 1E14 ions/cm^2. As a result of the plasma diffusion process **100**, doped trench liners **110** and **111** are respectively formed around the deep trenches **90** and **91**. The doped trench liners **110** and **111** are essentially formed by doping portions of the substrate **35** surrounding the deep trenches **90** and **91** with the dopant used in the plasma diffusion process.

[0017] The doped trench liners **110-111** formed as a result of the plasma diffusion process **100** each have a substantially uniform doping profile. The uniform doping profile means that the doping concentration levels at various regions within the doped trench liners **110-111** do not vary substantially from one another. For example, a doping concentration level measured at a portion of the doped trench liner **110** near the front side **40** is about the same as a doping concentration level measured at a portion of the doped trench liner **110** near the back side **45**. This characteristic is partially a result of the fact that the plasma diffusion causes the dopant to diffuse uniformly in all directions. Thus, such uniform doping profile cannot typically be achieved by conventional implantation processes, which would tend to result in a much heavier dopant concentration near the bottom of the deep trenches **110-111** (closer to the back side **45**) than near the side walls of the deep trenches. Further, the doped trench liners **110-111** are each formed around the deep trenches **90-91** in a conformal manner, so that the doped trench liners **110-111** at least partially surround the deep trenches **90-91**, respectively.

[0018] Processes (such as etching processes) used to form the deep trenches **90-91** may result in defects (such as dangling bonds) on the surfaces of the deep trenches. These defects may be physical defects or electrical defects and could trap carriers such as electrons. The trapped carriers may produce leakage current. Leakage current is problematic for image sensors such as the image sensor device **30**. For example, with a sufficient amount of leakage current, radiation-detection devices (not formed yet at this stage of fabrication) may falsely detect "light", even when the image sensor device **30**A is placed in an optically dark environment. Alternatively stated, the image sensor device **30**A may end up "sensing" light when it shouldn't have (since there is actually no light). In this situation, the leakage current may be referred to as a "dark current", and the pixel containing the radiation-detection device may become what is referred to as a "white pixel". Dark currents and white pixels are forms of electrical cross-talk and degrade the performance of the image sensor device **30**A and are therefore undesirable.

[0019] Here, the doped trench liners **110-111** substantially seal off these defects on the surfaces of the deep trenches **90-91**. The sealed-off defects are not able to move around freely, and thus will be much less likely to cause leakage current. As such, the doped trench liners **110-111** help eliminate the dark current or white pixel defects and therefore reduce electrical cross-talk.

[0020] Referring now to FIG. **3**, the patterned hard mask layer **80** (shown in FIG. **2**) is removed, and the deep trenches **90-91** (shown in FIG. **2**) are filled with a dielectric material to form deep trench isolation (DTI) features **130-131** (also referred to as DTI devices), respectively. The DTI features may be formed by depositing a dielectric material (such as an oxide material or a nitride material) from the front side **40** into the deep trenches **90-91**, and thereafter removing the portions of the dielectric material outside the deep trenches with a chemical-mechanical polishing (CMP) process. The doped trench liner **110** and the DTI feature **130** may be collectively referred to as an isolation structure **150**. Similarly, the doped trench liner **111** and the DTI feature **131** may be collectively referred to as another isolation structure **151**.

[0021] A shallow trench isolation (STI) feature **140** may also be formed in the periphery region **70** of the substrate **35**. The STI feature **140** may be formed by etching a shallow opening into the substrate **35** from the front side **40** and filling the opening with an oxide material or a nitride material. The STI feature **140** has a depth **145** that is less than 1 um, and may be formed before or after the formation of the DTI features **130-131**. Also, it is understood that a plurality of other DTI features and STI features may be formed in the pixel-array region **60** and the periphery region **70**. Only the DTI features **110-111** and the STI feature **140** are illustrated herein for the sake of providing an example and for facilitating ensuing discussions.

[0022] Referring now to FIG. **4**, radiation-detection devices **160** and **161** (also referred to as radiation-sensing regions) are formed in the pixel-array region **60** of the substrate **35**. The radiation-detection device **161** is formed between the isolation structures **150** and **151**. The radiation-detection device **160** is formed between the isolation structure **150** and another isolation structure (not illustrated) on the opposite side of the radiation-detection device.

[0023] The radiation-detection devices **160-161** are formed by performing an ion implantation process on the substrate **35** from the front side **40**. The ion implantation process implants the substrate **35** with a dopant having an opposite doping polarity as the substrate **35**. For example, in an embodiment where the substrate **35** is a P-type substrate, the radiation-detection devices **160-161** are doped with an N-type dopant. In another embodiment where the substrate **35** is an N-type substrate, the radiation-detection devices **160-161** are doped with a P-type dopant. Thus, the doping polarity of the radiation-detection devices **160-161** are opposite from the doping polarity of the doped trench liners **110-111**.

[0024] In the embodiment shown in FIG. **4**, the radiation-detection devices **160-161** are formed adjacent to or near the front side **40** of the substrate **35**. In alternative embodiments, depending on the design needs and manufacturing requirements, the radiation-detection devices **160-161** may be formed further away from the front side **40**. The position or location of the radiation-detection devices **160-161** may be adjusted by tuning an implantation energy level of the implantation process used to form these radiation-detection devices. For example, a higher implantation energy level

results in a deeper implant, which means the radiation-detection devices **160-161** are formed further away from the front side **40**. Similarly, a smaller implantation energy level causes the radiation-detection devices **160-161** to be formed closer to the front side **40**.

[0025] The radiation-detection devices **160-161** are operable to sense or detect radiation waves projected toward the radiation-detection devices **160-161** through the back side **45** of the substrate **35**. The radiation-detection devices **160-161** may be able to sense or detect radiation having specific wavelengths, which may correspond to lights of different colors. In an embodiment, the radiation-detection devices **160-161** include a photodiode. In other embodiments, the radiation-detection devices **160-161** may include other types of photodiodes, photogates, reset transistors, source follower transistors, or transfer transistors. For the sake of simplicity, the structural details of the radiation-detection devices **160-161** are not illustrated.

[0026] In addition, pinned implant layers **170** and **171** may be formed over the radiation-detection devices **160** and **161** on the front side **40**, respectively. The pinned implant layers **170-171** are each doped with a dopant that is of the same doping polarity as the doped trench liners **110-111** (and thus the opposite doping polarity as the radiation-detection devices **160-161**).

[0027] As discussed above, electrical cross-talk in the forms of dark currents and white pixels may be caused by defects along the surfaces of the deep trenches **90-91**. These defects are cured by the doped trench liners **110-111** in the present embodiment. During the operation of the image sensor device **30**A, optical cross-talk may also occur when photons from the radiation waves that are intended to be received by one radiation-detection device (such as the device **160**) end up being received by an unintended neighboring radiation-detection device (such as the device **161**). Here, the isolation structures **150** and **151** in conjunction with the pinned implant layers **170-171** provide sufficient isolation between the neighboring radiation-detection devices, thus substantially reducing optical cross-talk in addition to reducing electrical cross-talk.

[0028] Still referring to FIG. **4**, a doped well **180** may be formed adjacent to the isolation structure **151**. A floating diffusion (FD) node **190** may be formed in the well. A gate **200** may be formed over the front side **40** of the substrate **35**. The gate **200** may include a gate dielectric layer, a gate electrode layer, and gate spacers formed on the sidewalls of the gate. Meanwhile, transistor devices **220** and **221** may be formed on either side of the STI **140** in the periphery region **70**. The transistor devices **220-221** may each include a gate, a source, and a drain, and may be formed in a doped well. The transistor devices **220-221** may include devices that need to be kept optically dark. These devices may be digital devices, such as application-specific integrated circuit (ASIC) devices or system-on-chip (SOC) devices. In addition to the transistor devices **220-221**, the periphery region **70** may further include reference pixels (not illustrated) that are used to establish a baseline of an intensity of light for the image sensor device **30**.

[0029] Referring now to FIG. **5**, an interconnect structure **240** is formed over the front side **40** of the substrate **35**. The interconnect structure **240** includes a plurality of patterned dielectric layers and conductive layers that provide interconnections (e.g., wiring) between the various doped features, circuitry, and input/output of the image sensor device **30**. The interconnect structure **240** includes an interlayer dielectric (ILD) and a multilayer interconnect (MLI) structure formed in a configuration such that the ILD separates and isolates each MLI structure from other MLI structures. The MLI structure includes contacts/vias and metal lines formed on the substrate **35**. For the sake of simplicity, these contacts/vias and metal lines are not illustrated in detail in FIG. **5**.

[0030] In one example, the MLI structure may include conductive materials such as aluminum, aluminum/silicon/copper alloy, titanium, titanium nitride, tungsten, polysilicon, metal silicide, or combinations thereof, being referred to as aluminum interconnects. Aluminum interconnects may be formed by a process including PVD, CVD, or combinations thereof. Other manufacturing techniques to form the aluminum interconnect may include photolithography processing and etching to pattern the conductive materials for vertical connection (contacts/vias) and horizontal connection (conductive lines). Alternatively, a copper multilayer interconnect may be used to form the metal patterns. The copper interconnect structure may include copper, copper alloy, titanium, titanium nitride, tantalum, tantalum nitride, tungsten, polysilicon, metal silicide, or combinations thereof. The copper interconnect may be formed by a technique including CVD, sputtering, plating, or other suitable processes.

[0031] A buffer layer **250** is formed on the interconnect structure **240**. In an embodiment, the buffer layer **250** includes a dielectric material such as silicon oxide. Alternatively, the buffer layer **250** may optionally include silicon nitride. The buffer layer **250** is formed by CVD, PVD, or other suitable techniques. The buffer layer **250** is planarized to form a smooth surface by a chemical-mechanical-polishing (CMP) process.

[0032] A carrier substrate **260** is then bonded with the buffer layer **250** so that processing of the back side **45** of the substrate **35** can be performed. The carrier substrate **260** is bonded to the buffer layer **250** by molecular forces. The carrier substrate **260** may be similar to the substrate **35** and includes a silicon material. Alternatively, the carrier substrate **260** may optionally include a glass substrate. The carrier substrate **260** provides protection for the various features formed on the front side **40** of the substrate **35**. The carrier substrate **260** also provides mechanical strength and support for processing the back side **45** of the substrate **35**, which will be discussed below. An annealing process may optionally be performed to enhance bonding strength. The buffer layer **250** provides electrical isolation between the substrate **35** and the carrier substrate **260**.

[0033] Thereafter, a thinning process **270** (also referred to as a thin down process) is performed to thin the substrate **35** from the back side **45**. In an embodiment, the thinning process **270** includes a CMP process. The thinning process **270** may also include a diamond scrubbing process, a grinding process, or other suitable techniques. A substantial amount of material may be removed from the substrate **35** by the process **270**. In an embodiment, the thinning process **270** does not end until the back portions of the DTI features **130-131** have been reached, so that the radiation-detection devices **160-161** can be completely isolated from each other by the DTI features **130-131**. After the thinning process **270** is performed, the substrate **35** has a thickness **280**, which is in a range from approximately 1 μto approximately 3 μm.

[0034] Referring now to FIG. **6**, pinned implant layers **290** and **291** may be formed over the radiation-detection devices **160** and **161** on the back side **45**, respectively. The pinned

implant layers **290-291** are each doped with a dopant that is of the same doping polarity as the doped trench liners **110-111** (and thus the opposite doping polarity as the radiation-detection devices **160-161**).

[0035] At this point of the fabrication, the radiation-detection devices **160** and **161** are completely isolated from each other. The radiation-detection device **160** is surrounded by the pinned implant layers **170** and **290** as well as a portion of the doped trench liner **110** (on the left side of the DTI feature **130**). It is understood that an additional un-illustrated trench liner may be formed to surround the radiation-detection device **160** on its left side. The radiation-detection device **161** is surrounded by the pinned implant layers **171** and **291** as well as portions of the doped trench liners **110-111**. These doped layers surrounding the radiation-detection devices **160-161** may also be referred to as isolation wells.

[0036] As discussed above, the complete isolation between the radiation-detection devices **160** and **161** help reduce electrical and optical cross-talk. However, the isolation well surrounding the radiation-detection device **160** is now also electrically isolated from the isolation well surrounding the radiation-detection device **161**. In other words, these isolation wells are now "floating", or not necessarily having the same electrical potential (voltage). Proper operation of the image sensor device **30**A may need these isolation wells to be biased to the same voltage, for example electrically grounded. The present disclosure offers several different embodiments to properly set the potential to the isolation wells.

[0037] Referring now to FIG. **7**, an amorphous silicon layer **300** is formed over the back side **45** of the substrate **35**, and over both the pixel-array region **60** and the periphery region **70**. The amorphous silicon layer **300** may be formed by a suitable process known in the art, such as CVD, PVD or ALD processes. A thickness of the amorphous silicon layer **300** may be in a range from about 500 angstroms to about 1500 angstroms.

[0038] Thereafter, an annealing process **310** may be performed to the amorphous silicon layer **300**. In an embodiment, the annealing process **310** includes a laser annealing process and can reach an annealing temperature that is sufficiently high to melt the amorphous silicon layer **300** so that the amorphous silicon layer can be re-crystallized. The laser power and annealing duration are adjusted to achieve a silicon melting temperature of greater than about 1400 degrees Celsius. Thus, after the annealing process **310** is performed, the amorphous silicon layer **300** may also be referred to as a re-crystallized silicon layer **300**. It is understood that the temperature of the annealing process **310** is controlled so as to not exceed an allocated thermal budget for the image sensor device **30**A.

[0039] The re-crystallized silicon layer **300** (the amorphous silicon layer **300** that has been recrystallized) has substantially lower resistivity (in the form of a sheet resistance) compared to un-melted silicon, such as the substrate **35**. The resistivity of the recrystallized silicon layer **300** may be low enough that it is practically conductive. In this manner, the isolation wells surrounding the radiation-detection devices **160** and **161** are both electrically coupled to the re-crystallized silicon layer **300**. Thus, these isolation wells can be biased to the same potential by biasing the re-crystallized silicon layer **300**. For example, when the re-crystallized silicon layer **300** is grounded, the isolation wells are grounded as well. Hence, the isolation wells would no longer be floating. It is also understood that the re-crystallized silicon layer **300** is substantially transparent, and as such will not interfere with the sensing of radiation waves projected toward the image sensor device **30**A from the back side **45**.

[0040] FIGS. **8-12** are diagrammatic fragmentary cross-sectional side views of a portion of a respective BSI image sensor device at a fabrication stage according to various alternative embodiments of the method **11** of FIG. **1**. These alternative embodiments are similar to the embodiment described above in association with FIGS. **2-7**. Thus, for purposes of consistency and clarity, similar features are labeled the same in all embodiments.

[0041] Referring to FIG. **8**, an image sensor device **30**B is illustrated. One difference between the image sensor device **30**B and the image sensor device **30**A described above is that the image sensor device **30**B does not use a re-crystallized silicon layer approach to bias the isolation wells. Instead, when the interconnect structure **240** is formed, one or more contacts/vias are formed on the doped trench liners, for example contacts/vias **320** and **321** formed on the trench liner **110**. These contacts/vias **320-321** are electrically coupled to the trench liner **110** and may also be electrically coupled to external devices through the interconnect structure **240**. Thus, the contacts/vias allow electrical connections to be made between external devices and the isolation wells surrounding the radiation-detection devices **160-161**. A single voltage (for example, ground) may then be applied to all the isolation wells, so that these isolation wells are no longer floating.

[0042] Referring to FIG. **9**, an image sensor device **30**C is illustrated. One difference between the image sensor device **30**C and the image sensor device **30**A described above is that the DTI features **130** and **131** of the image sensor device **30**C are formed from the back side **45**. In other words, the DTI features **130-131** extend from the back side **45** toward the front side **40**. The DTI features **130-131** do not extend all the way to the front surface of the substrate **35**, however. Shallow trench isolation features **330** and **331** are formed from the front side **40** of the substrate and are approximately aligned with the DTI features **130** and **131**, respectively. In the embodiment illustrated in FIG. **9**, the STI features **330-331** come into contact with (or abut) the DTI features **130-131**, respectively. Further, the doped well **180** extend to the left side so that the STI features **330-331** and portions of the DTI features **130-131** are also disposed within the doped well **180**. Hence, the doped well **180** here can also be considered a part of the isolation well surrounding the radiation-detection devices **160-161**.

[0043] In this embodiment, the DTI features **130-131** and the STI features **330-331** (and the isolation wells surrounding them) in conjunction serve as isolation structures to prevent electrical and optical cross-talk between the radiation-detection devices **160-161**. Meanwhile, the re-crystallized silicon approach is used to bias the isolation wells.

[0044] Referring to FIG. **10**, an image sensor device **30**D is illustrated. The image sensor device **30**D incorporates aspects of both the image sensor devices **30**B and **30**C. In particular, the image sensor **30**D employs the STI/DTI combination approach of the image sensor **30**C, and also uses the vias/contacts **320-321** to bias the isolation wells instead of using a re-crystallized silicon layer to do so. The vias/contacts **320-321** are formed on portions of the doped well **180** surrounding the STI feature **330**.

[0045] Referring to FIG. **11**, an image sensor device **30**E is illustrated. The image sensor device **30**E is similar to the image sensor devices **30**D, except that the STI features **330-331** and the DTI features **130-131** are not abutting each other. Instead, a gap (or portions of the doped well **180**) separates the STI features **330-331** and the DTI features **130-131**, respectively. As such, the isolation wells here are both coupled to the doped well **180**, and the isolation wells can be biased by biasing the doped well **180**. Consequently, neither

the contacts/vias coupling the isolation wells nor the re-crystallized silicon layer is used in this embodiment.

[0046] Referring to FIG. **12**, an image sensor device **30**F is illustrated. The image sensor device **30**F is similar to the image sensor devices **30**E, except that the STI features **330-331** are not formed. Once again, the image sensor device **30**F uses the doped well **180** to bias the isolation wells surrounding the radiation-detection devices **160-161**, instead of using the vias/contacts or the re-crystallized silicon layer to bias the isolation wells.

[0047] Compared to traditional BSI image sensor devices, several advantages are offered by the various embodiments described above and illustrated in FIGS. **2-12**. It is understood, however, that different embodiments may offer different advantages, and that no particular advantage is required by all embodiments. One of the advantages is reduced cross-talk in the image sensor device. Traditionally, shallow trench isolation devices are used to isolated adjacent pixels. The relatively short depth of STI devices may hinder the STI devices' ability to sufficiently isolate the adjacent pixels, since leakage charge carriers may go "under" or around the STI devices to reach adjacent pixels. In comparison, the embodiments of the present disclosure use a deep trench isolation feature to isolate adjacent pixels. The relatively long depth of the DTI devices can adequately block cross-talk between adjacent pixels, as it is much harder for leakage charge carriers to go around the DTI devices.

[0048] Another advantage is that the doped trench liners are formed to have a relatively uniform doping profile. Traditional image sensor devices may not have doped trench liners at all, or if anything, a doped region below the trench isolation features but no doped regions behind the side walls of the trench isolations. Thus, the traditional trench isolation features may not adequately capture the defects along the side walls of the trenches. Here, the uniform doping profile of the trench liners allows the doped trench liners to adequately trap the defects along the surfaces of the deep trenches, which again reduces cross-talk.

[0049] One more advantage is that the isolation wells discussed herein are biased to the same potential (for example electrical ground) through various approaches such as using re-crystallized silicon layer, forming vias/contacts coupling the isolation wells, or using a doped well. Thus, the isolation wells are no longer electrically floating, which improves the performance of the image sensor device.

[0050] It is understood that additional processes may be performed to complete the fabrication of the image sensor devices **30**A-**30**F. For example, an anti-reflective coating (ARC) layer may be formed over the back side **45**. The ARC layer serves to reduce reflection of radiation waves projected toward the back side **45**. Thereafter, a color filter layer may be formed over the ARC layer. The color filter layer can support the filtering of radiation waves having a particular range of wavelengths, which may correspond to a particular light color, for example red, green, or blue. Thus, the color filter layer may be used to only allow light having a predetermined color to reach the radiation-detection devices **160-161**. Afterwards, a micro lens layer may be formed over the color filter layer for directing projected radiation toward the radiation-detection devices **160-161** thereon and therethrough. The micro lens layer may be positioned in various arrangements and have various shapes depending on a refractive index of material used for the micro-lens layer and distance from the surface of the image sensor devices **30**A-**30**F. The ARC layer, the color filter layer, and the micro lens layer are not illustrated for the sake of simplicity.

[0051] The image sensor devices **30**A-**30**F may include additional components such as charge-coupled devices (CCD) and input/output circuitry that provide an operational environment for the pixels and for supporting external communication with the pixels. These components are also not illustrated herein for the sake of simplicity.

[0052] One of the broader forms of the present disclosure involves an apparatus that includes a back side illuminated image sensor device. The image sensor device includes a substrate having a front side and a back side. The image sensor device includes a radiation-detection device formed in the substrate. The radiation-detection device is operable to detect a radiation wave that enters the substrate through the back side. The image sensor device also includes an isolation structure formed in the substrate and adjacent to the radiation-detection device. The isolation structure includes a deep trench isolation device and a doped trench liner that at least partially surrounds the deep trench isolation device.

[0053] Another of the broader forms of the present disclosure involves a back side illuminated image sensor device that includes a substrate having a front surface and a back surface opposite the front surface. The image sensor device also includes a radiation-sensing region that is disposed in the substrate. The radiation-sensing region is operable to sense radiation projected toward the radiation-sensing region through the back surface. The image sensor device further includes a deep trench isolation feature disposed adjacent to the radiation-sensing region. The image sensor device also includes a doped layer that at least partially surrounds the deep trench isolation feature in a conformal manner.

[0054] Still another of the broader forms of the present disclosure involves a method of fabricating an image sensor device. The method includes forming an isolation structure in the substrate. The isolation structure has a deep trench isolation device and a doped trench liner that at least partially surrounds the deep trench isolation device. The method also includes forming a radiation-detection device in the substrate. The radiation-detection device is formed adjacent to the isolation structure.

[0055] The foregoing has outlined features of several embodiments so that those skilled in the art may better understand the detailed description that follows. Those skilled in the art should appreciate that they may readily use the present disclosure as a basis for designing or modifying other processes and structures for carrying out the same purposes and/or achieving the same advantages of the embodiments introduced herein. Those skilled in the art should also realize that such equivalent constructions do not depart from the spirit and scope of the present disclosure, and that they may make various changes, substitutions and alterations herein without departing from the spirit and scope of the present disclosure.

What is claimed is:

1. An apparatus comprising a back side illuminated (BSI) image sensor device that includes:

a substrate having a front side and a back side;

a radiation-detection device formed in the substrate, the radiation-detection device being operable to detect a radiation wave that enters the substrate through the back side; and

an isolation structure formed in the substrate and adjacent to the radiation-detection device, the isolation structure including a deep trench isolation device and a doped trench liner that at least partially surrounds the deep trench isolation device.

2. The apparatus of claim **1**, wherein the doped trench liner is formed conformal to the deep trench isolation and has a substantially uniform doping profile.

3. The apparatus of claim **1**, wherein the BSI image sensor device further includes an interconnect structure formed over the front side of the substrate, the interconnect structure having a contact formed on the doped trench liner.

4. The apparatus of claim **1**, wherein the BSI image sensor device further includes a re-crystallized silicon layer formed over the back side of the substrate.

5. The apparatus of claim **4**, wherein the BSI image sensor device has a pixel region and a periphery region, the radiation-detection device and the isolation structure being formed in the pixel region; and wherein the re-crystallized silicon layer is formed over both the pixel region and the periphery region and is electrically coupled to the doped trench liner.

6. The apparatus of claim **1**, wherein the radiation-detection device has a front side and a back side, and wherein the BSI image sensor device further includes:

a first pinned implant layer formed over the front side of the radiation-detection device; and

a second pinned implant layer formed over the back side of the radiation-detection device;

wherein the first and second pinned implant layers are each electrically coupled to the doped trench liner and have the same doping polarity as the doped trench liner.

7. The apparatus of claim **1**, wherein:

the radiation-detection device includes a photodiode doped with a first type dopant;

the deep trench isolation device includes an oxide material and has a depth in a range from approximately 1 micron to about 3 microns; and

the doped trench liner includes a second type dopant opposite the first type.

8. The apparatus of claim **1**, wherein the deep trench isolation device extends from the back side, wherein the isolation structure further includes a shallow trench isolation device that extends from the front side and is approximately aligned with the deep trench isolation device.

9. An image sensor device, comprising:

a substrate having a front surface and a back surface opposite the front surface;

a radiation-sensing region disposed in the substrate, the radiation-sensing region being operable to sense radiation projected toward the radiation-sensing region through the back surface;

a deep trench isolation feature disposed adjacent to the radiation-sensing region; and

a doped layer that at least partially surrounds the deep trench isolation feature in a conformal manner.

10. The image sensor device of claim **9**, wherein:

a first portion of the doped layer disposed near the front surface has a first doping concentration level;

a second portion of the doped layer disposed near the back surface has a second doping concentration level; and

the first and second doping concentration levels are not substantially different from each another.

11. The image sensor device of claim **9**, further including a conductive via disposed on the doped layer, the via being electrically coupled to the doped layer.

12. The image sensor device of claim **9**, further including a re-crystallized silicon layer disposed over the back surface of the substrate.

13. The image sensor device of claim **9**, wherein the deep trench isolation feature extends from the back surface, and further including a shallow trench isolation feature that extends from the front surface and abuts the deep trench isolation feature.

14. A method of fabricating an image sensor device, comprising:

providing a substrate having a front side and a back side;

forming an isolation structure in the substrate, the isolation structure including a deep trench isolation device and a doped trench liner that at least partially surrounds the deep trench isolation device; and

forming a radiation-detection device in the substrate, the radiation-detection device being adjacent to the isolation structure and being operable to detect a radiation wave that enters the substrate through the back side.

15. The method of claim **14**, wherein the forming the isolation structure includes:

etching the substrate to form an opening in the substrate, the opening having a depth that is greater than about 1 micron;

performing a plasma diffusion process to exposed surfaces of the opening to form the doped trench liner; and

thereafter filling the opening with a dielectric material to form the deep trench isolation device.

16. The method of claim **15**, wherein the performing the plasma diffusion process is carried out so that the doped trench liner has a substantially uniform doping profile.

17. The method of claim **15**, wherein the etching the substrate is carried out in a manner so that the opening is etched from the back side; and further including:

etching a shallow opening from the front side, the shallow opening being approximately aligned with the deep trench isolation device; and

thereafter filling the shallow opening with a dielectric material to form a shallow trench isolation device.

18. The method of claim **14**, further including forming an interconnect structure over the front side of the substrate, the forming the interconnect structure including forming a contact on the doped trench liner.

19. The method of claim **14**, further including:

forming an amorphous silicon layer over the back side of the substrate; and

forming a laser annealing process on the amorphous silicon layer to melt and re-crystallize the amorphous silicon layer.

20. The method of claim **14**, wherein the radiation-detection device has a front side and a back side, further including:

after the forming the radiation-detection device, forming a first pinned implant layer over the front side of the radiation-detection device, the first pinned implant layer having the same doping polarity as the doped trench liner;

thereafter thinning the substrate from the back side; and

forming a second pinned implant layer over the back side of the radiation-detection device, the second pinned implant layer having the same doping polarity as the doped trench liner;

wherein the forming the first and second pinned implant layers are carried out in a manner so that they first and second pinned implant layers are each electrically coupled to the doped trench liner.

* * * * *