US 20120033119A1

(19) United States

(12) Patent Application Publication

Shinohara

(10) Pub. No.: US 2012/0033119 A1

(43) Pub. Date: Feb. 9, 2012

(54) **SOLID-STATE IMAGING DEVICE, MANUFACTURING METHOD THEREOF, AND ELECTRONIC APPARATUS**

(75) Inventor: **Takekazu Shinohara**, Kumamoto (JP)

(73) Assignee: **SONY CORPORATION**, Tokyo (JP)

(21) Appl. No.: **13/196,127**

(22) Filed: **Aug. 2, 2011**

(30) **Foreign Application Priority Data**

Aug. 9, 2010 (JP) ..... 2010-179073

**Publication Classification**

(51) **Int. Cl.**

*H04N 5/225* (2006.01)

*H01L 31/0216* (2006.01)

*H01L 27/146* (2006.01)

(52) **U.S. Cl.** . **348/302**; 250/208.1; 438/73; 348/E05.024; 257/E31.119

(57) **ABSTRACT**

A solid-state imaging device having a backside illuminated structure, includes: a pixel region in which pixels each having a photoelectric conversion portion and a plurality of pixel transistors are arranged in a two-dimensional matrix; an element isolation region isolating the pixels which is provided in the pixel region and which includes a semiconductor layer provided in a trench by an epitaxial growth; and a light receiving surface at a rear surface side of a semiconductor substrate which is opposite to a multilayer wiring layer.

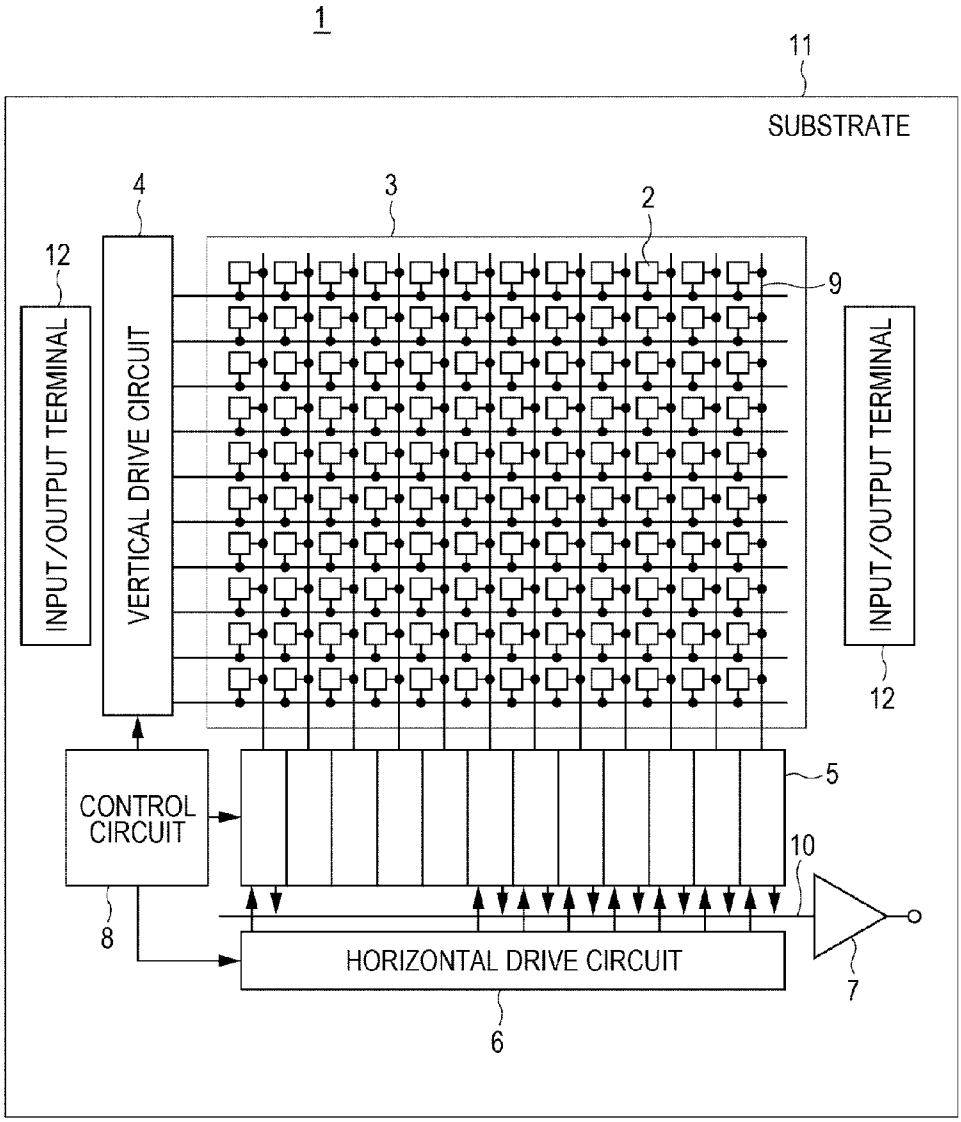

FIG. 1

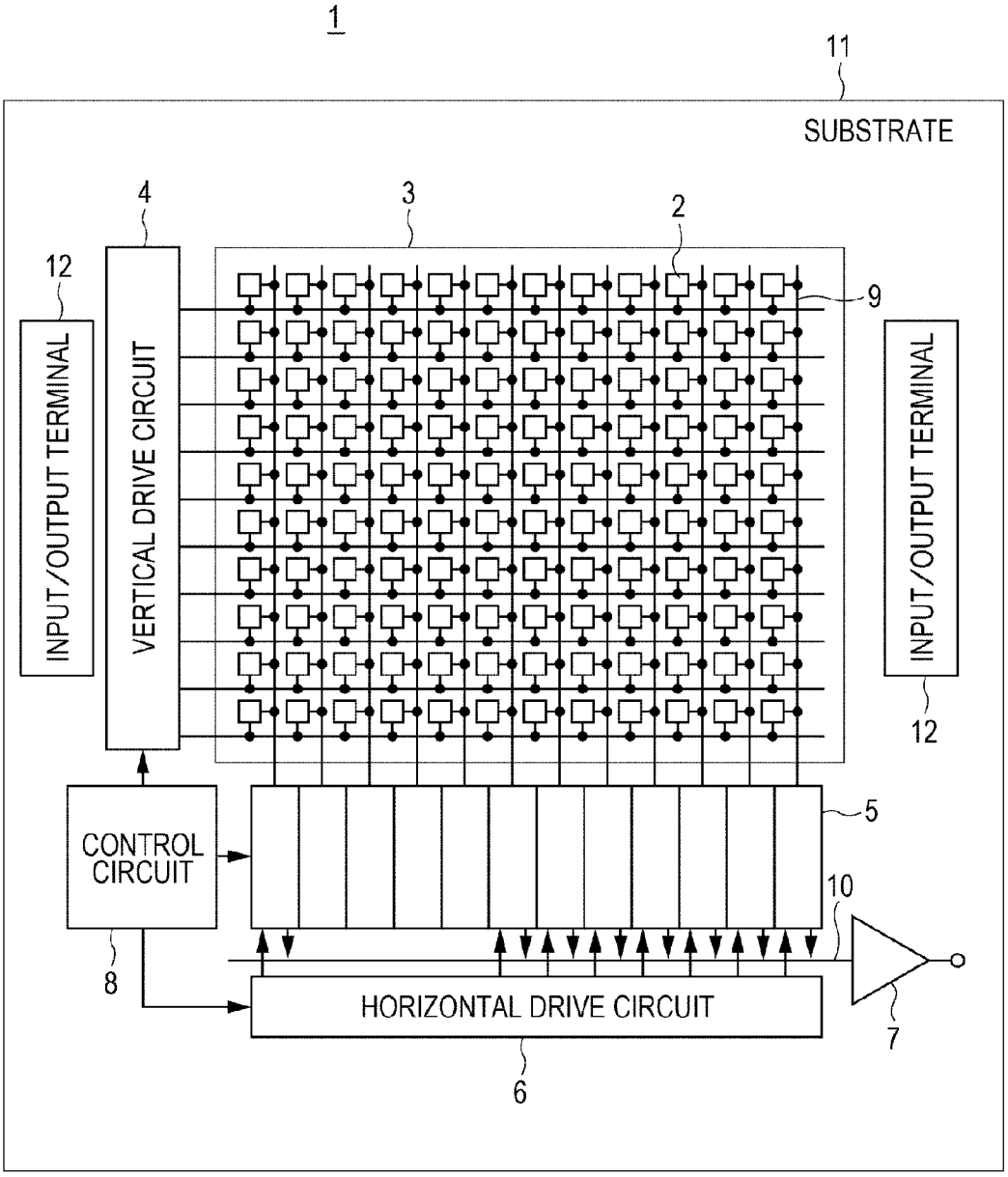
1
11
SUBSTRATE
4
3
2
12
9
INPUT/OUTPUT TERMINAL
VERTICAL DRIVE CIRCUIT
INPUT/OUTPUT TERMINAL
12
5
CONTROL CIRCUIT
10
8
HORIZONTAL DRIVE CIRCUIT
7
6

FIG. 2

21

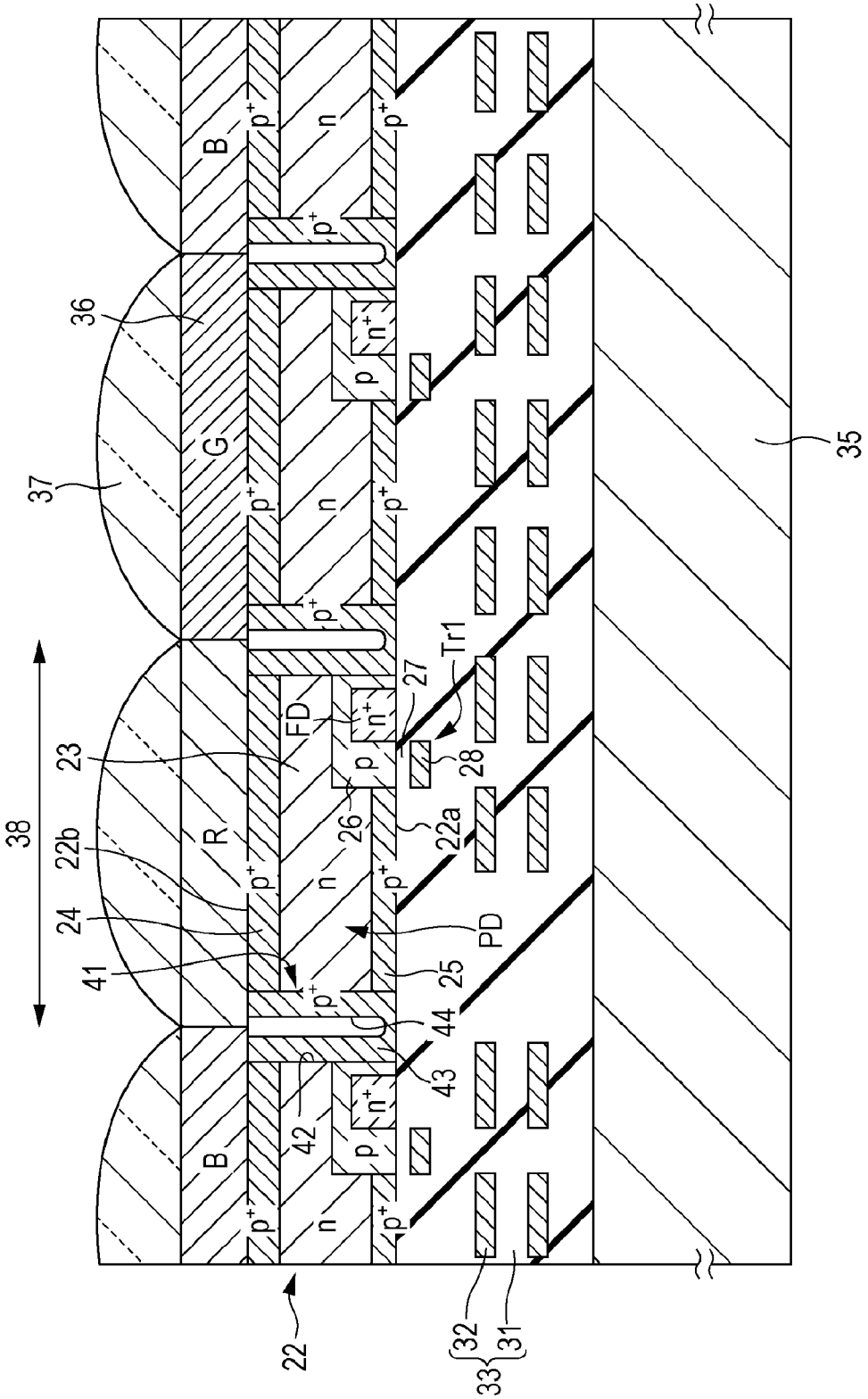

B
G
R
B
p+
n
n+
p
FD
Tr1
PD
22
22a
22b
23
24
25
26
27
28
31
32
33
35
36
37
38
41
42
43
44

FIG. 3A

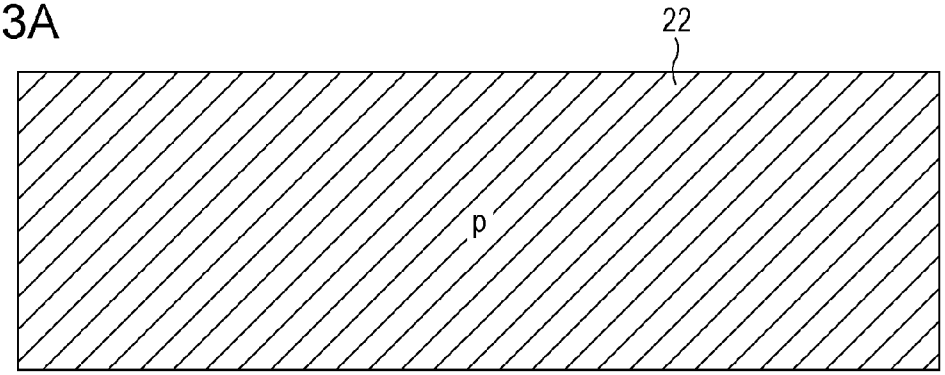


FIG. 3B

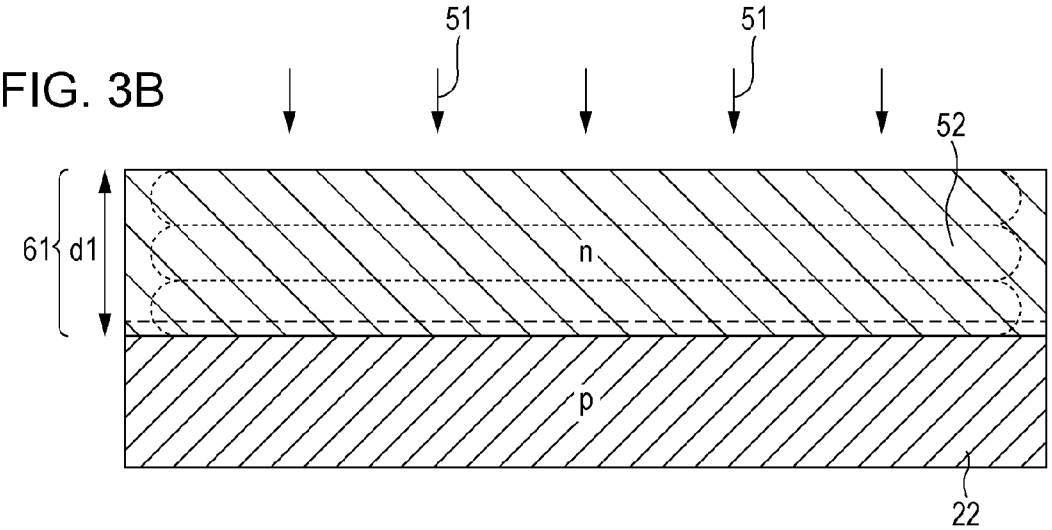


FIG. 3C

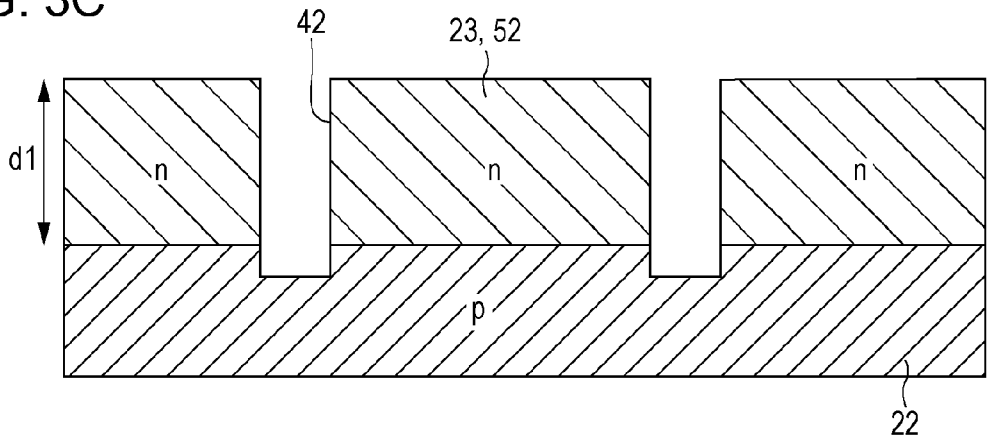

FIG. 4D

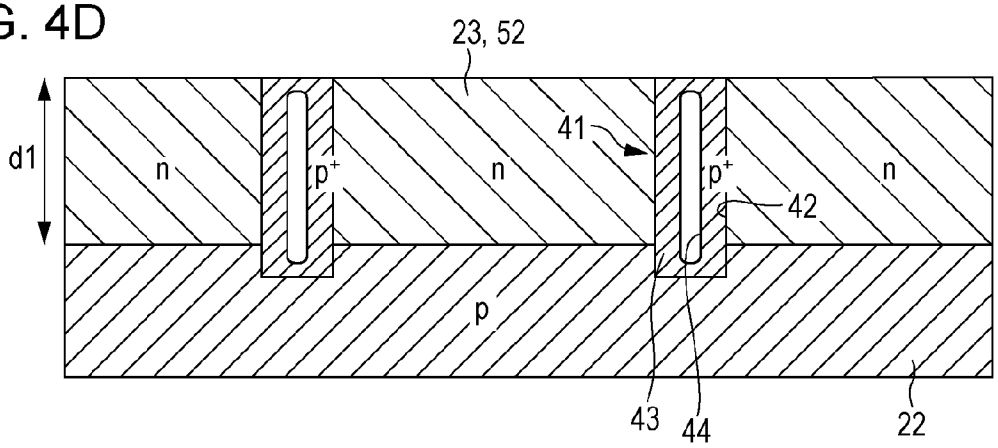


FIG. 4E

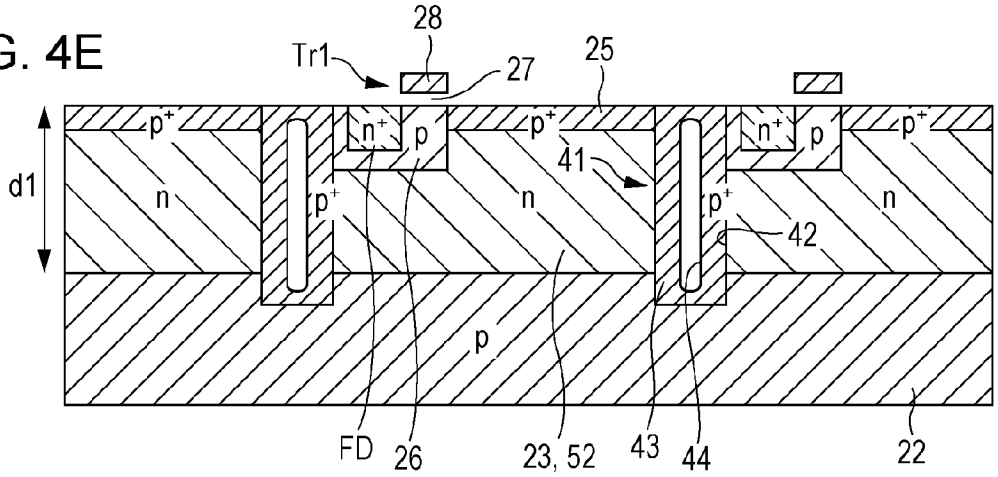


FIG. 4F

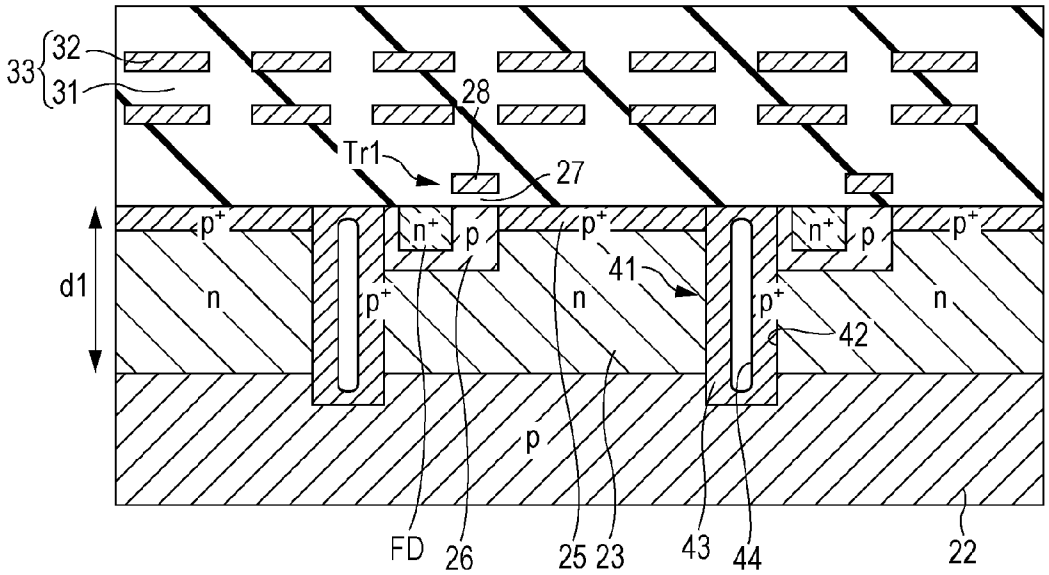

FIG. 5G

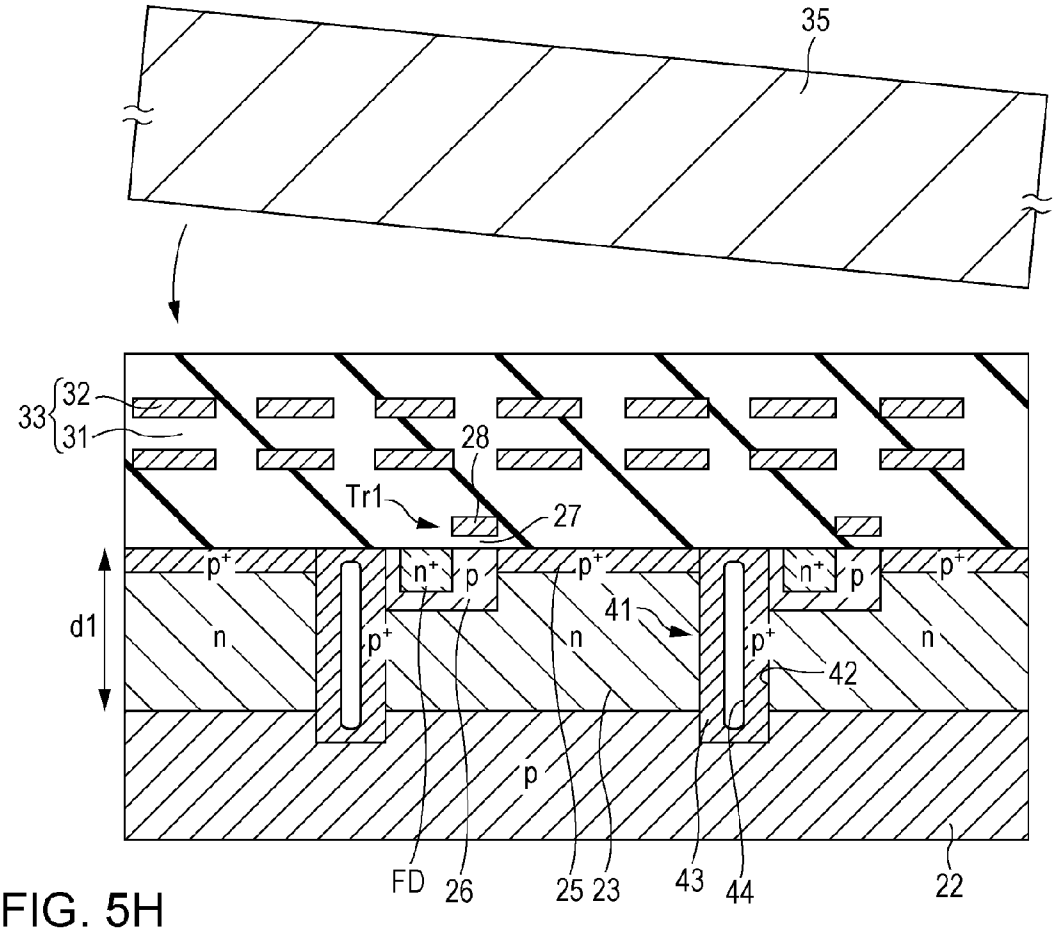
35
33
32
31
28
Tr1
27
p+
n+
p
p+
n+
p
p+
d1
n
p+
n
41
p+
n
42
p
FD
26
25
23
43
44
22

FIG. 5H

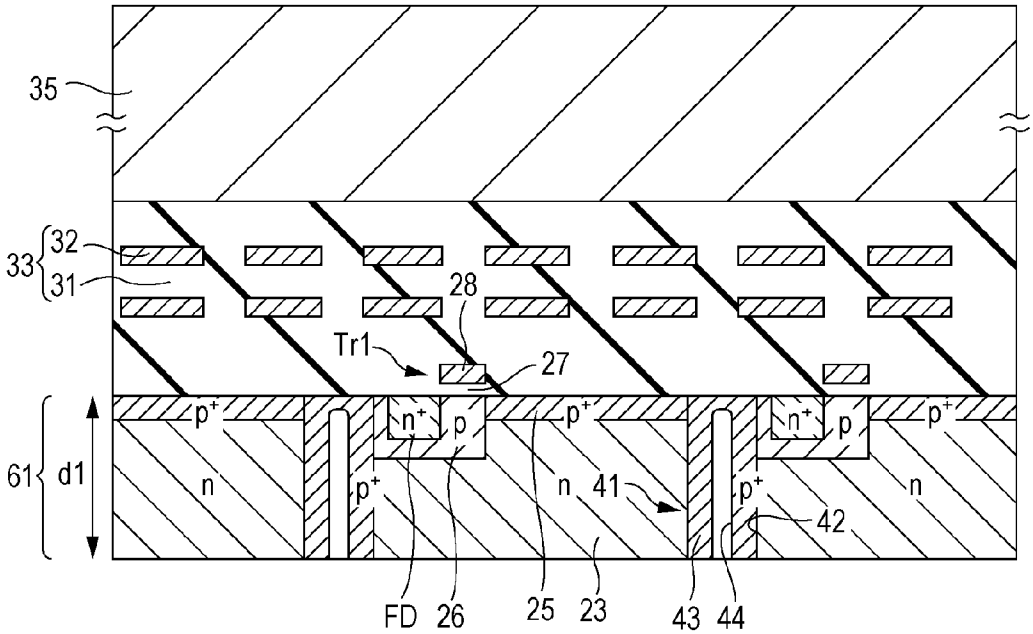
35
33
32
31
28
Tr1
27
p+
n+
p
p+
n+
p
p+
61
d1
n
p+
n
41
p+
n
42
FD
26
25
23
43
44

FIG. 6

21

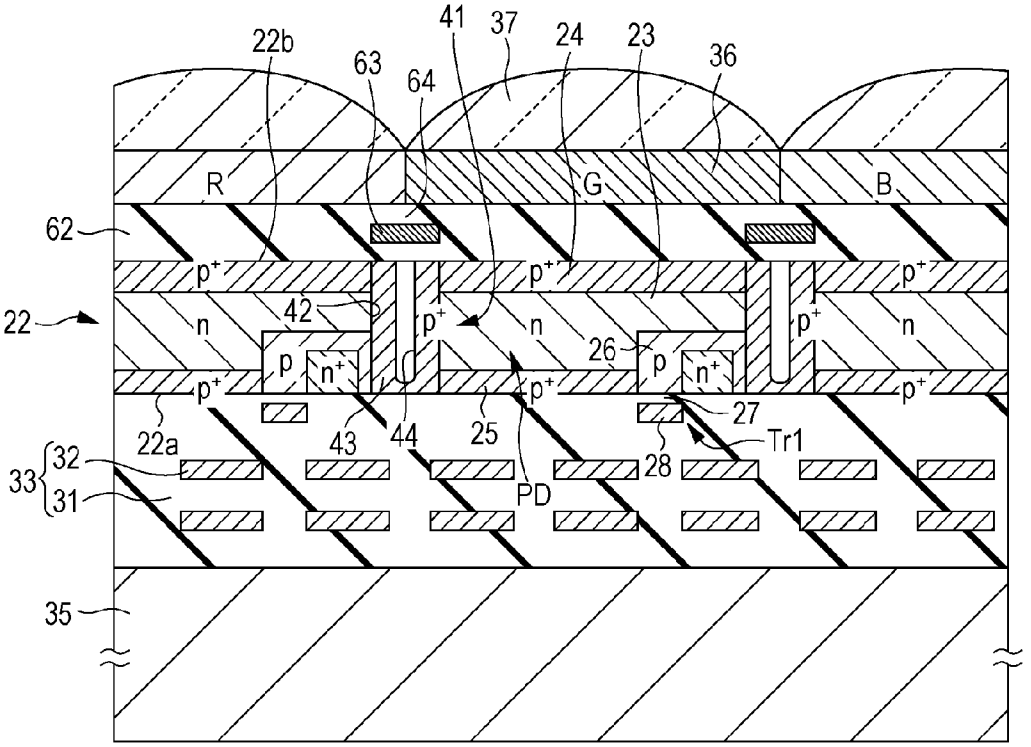
41
37
22b
24
23
36
63
64
R
G
B
62
p+
p+
p+
22
n
42
p+
n
p+
n
26
p
n+
p
n+
p+
p+
p+
22a
43
44
25
27
Tr1
32
33
31
28
PD
35

FIG. 7A

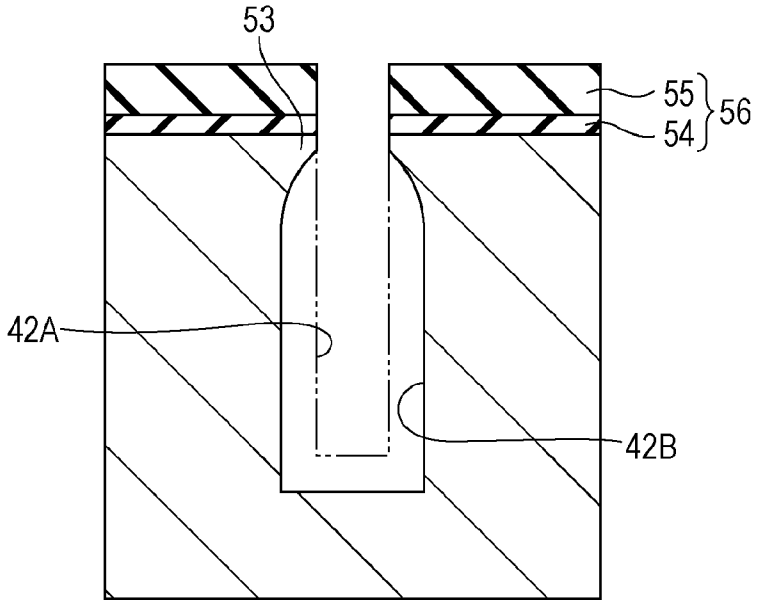


FIG. 7B

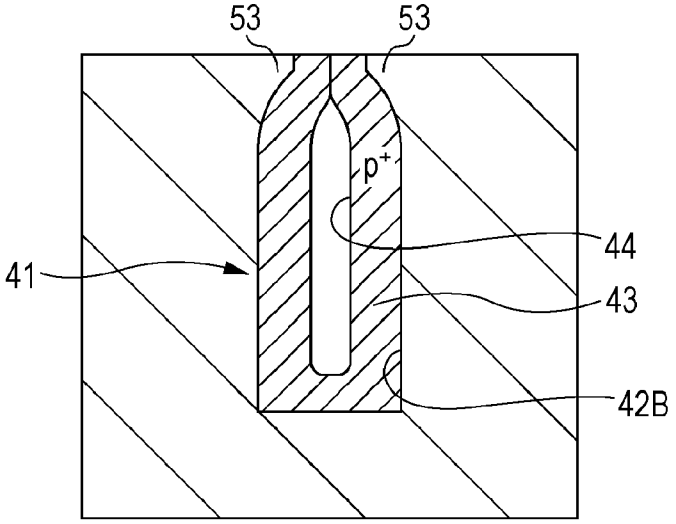


FIG. 8

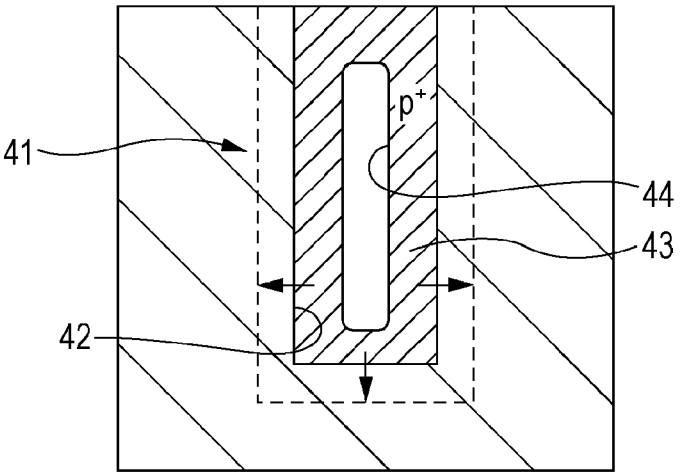

FIG. 9A

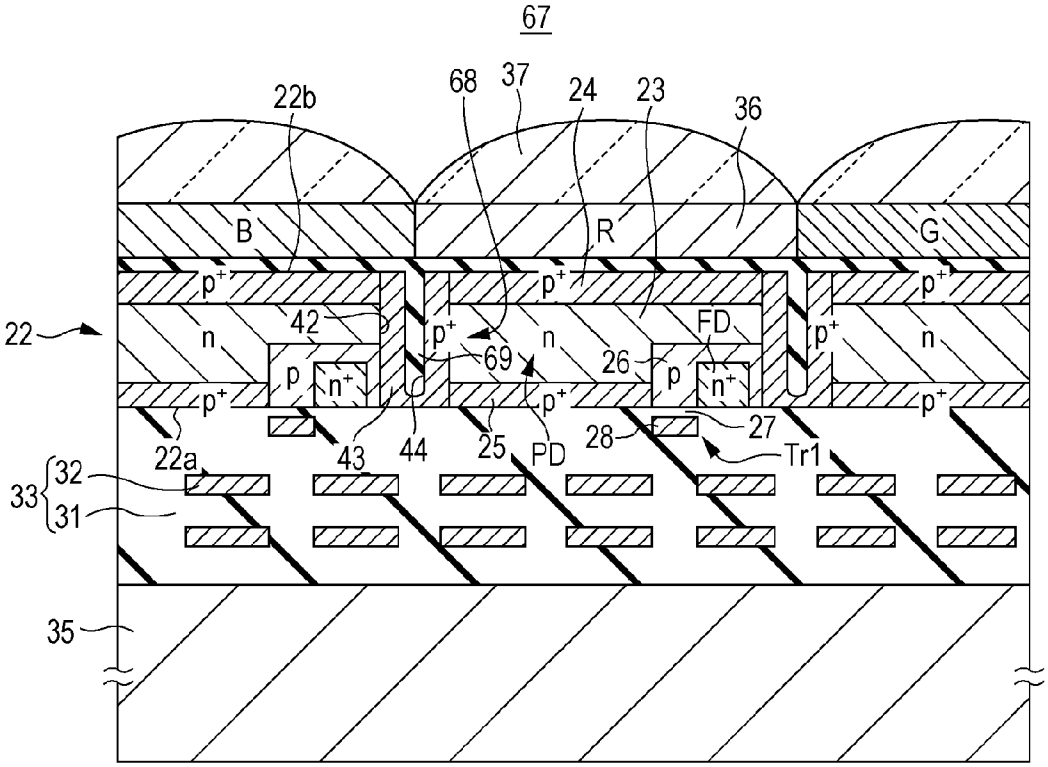
67
68
37
24
23
36
22b
B
R
G
p+
22
n
42
p
n+
69
26
FD
22a
43
44
25
PD
28
27
Tr1
32
33
31
35

FIG. 9B

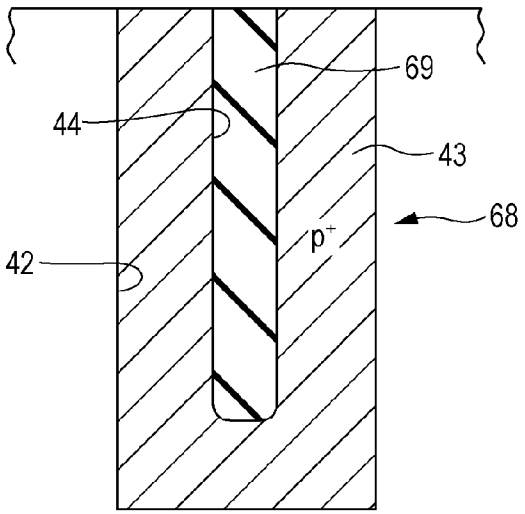
69
44
43
68
p+
42

FIG. 10A

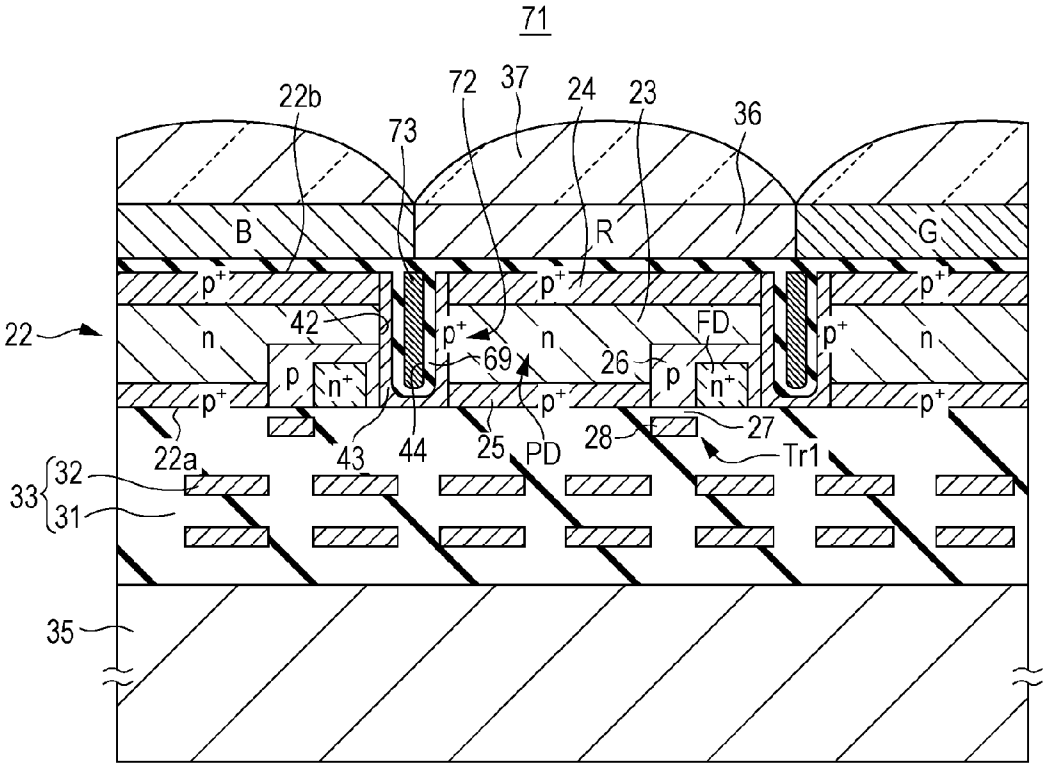


FIG. 10B

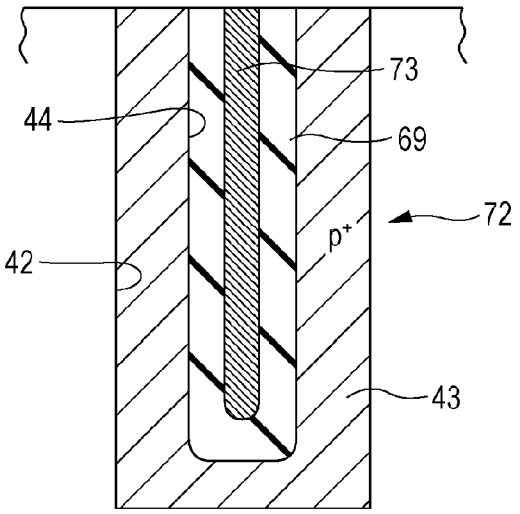

FIG. 11A

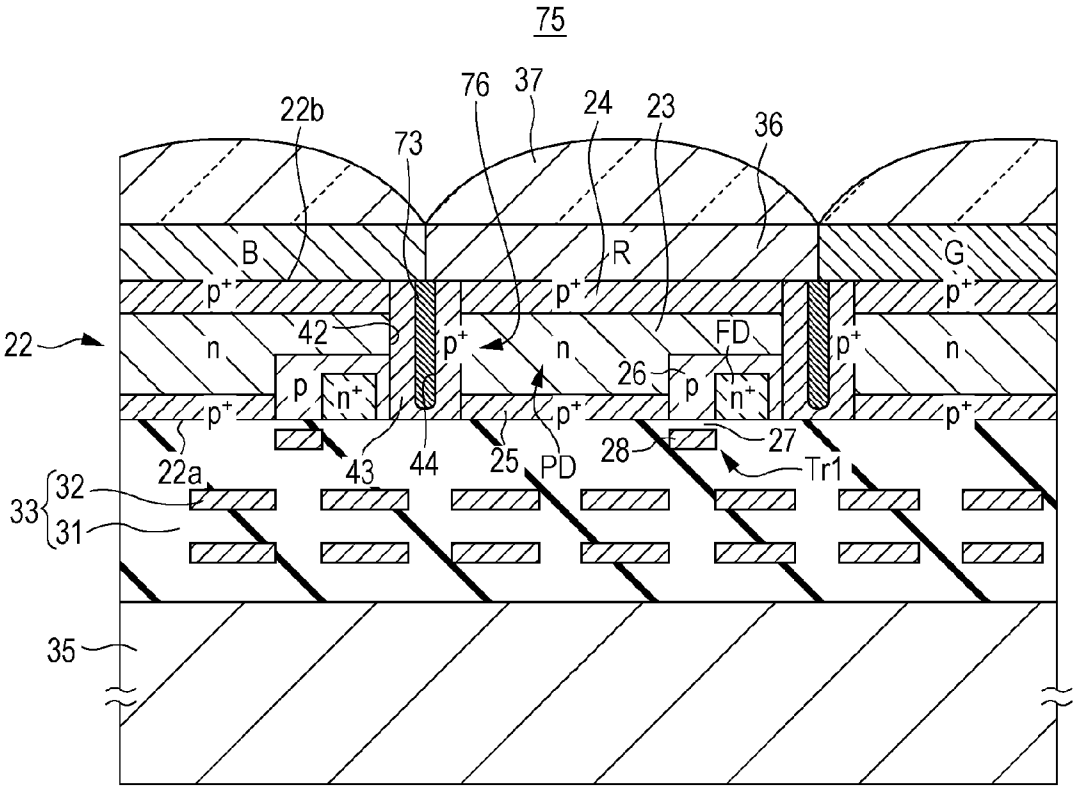


FIG. 11B

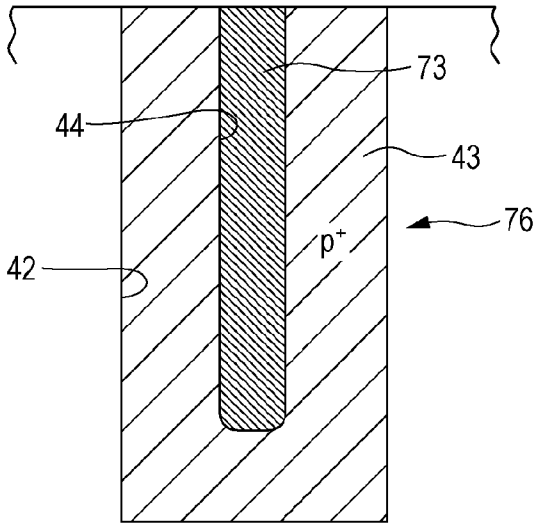

FIG. 12A

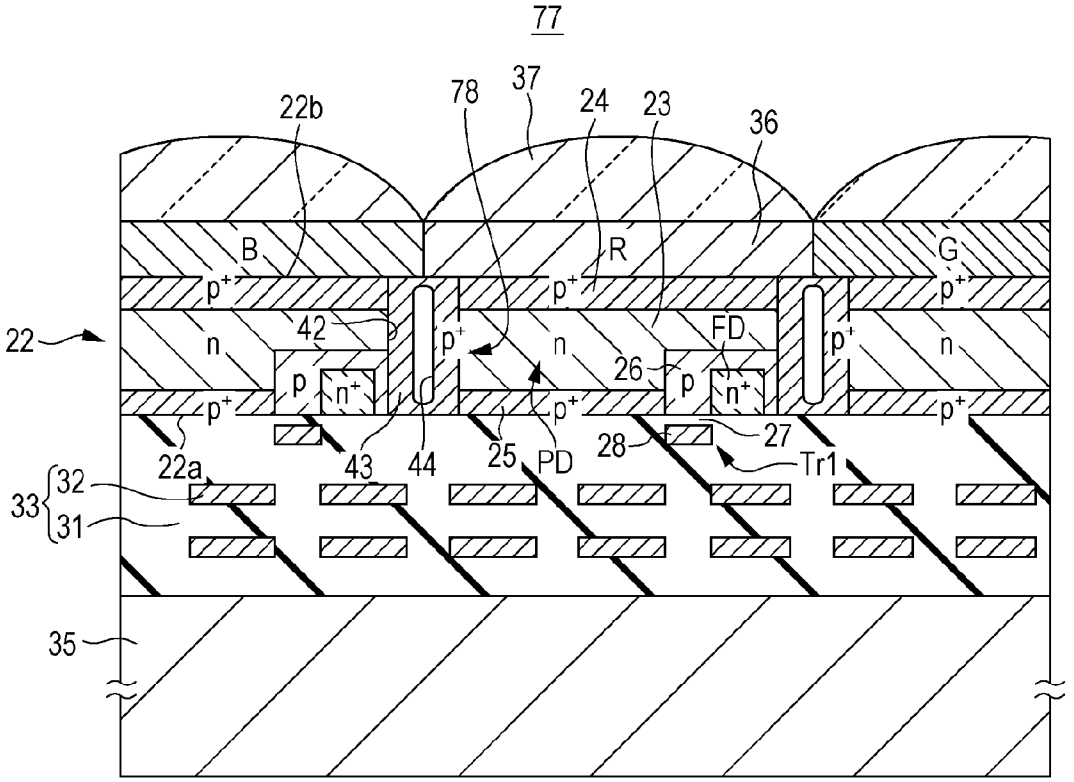


FIG. 12B

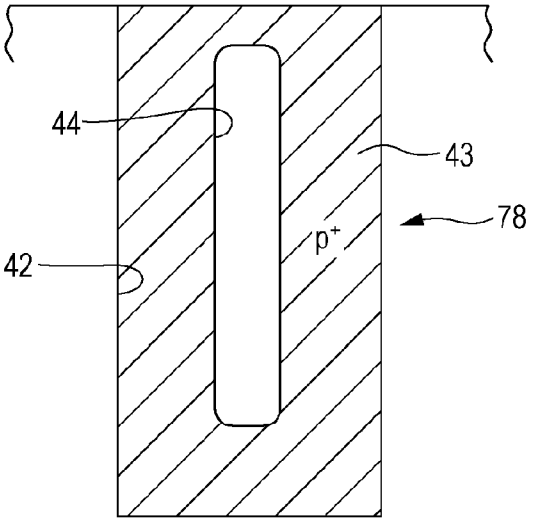

FIG. 13

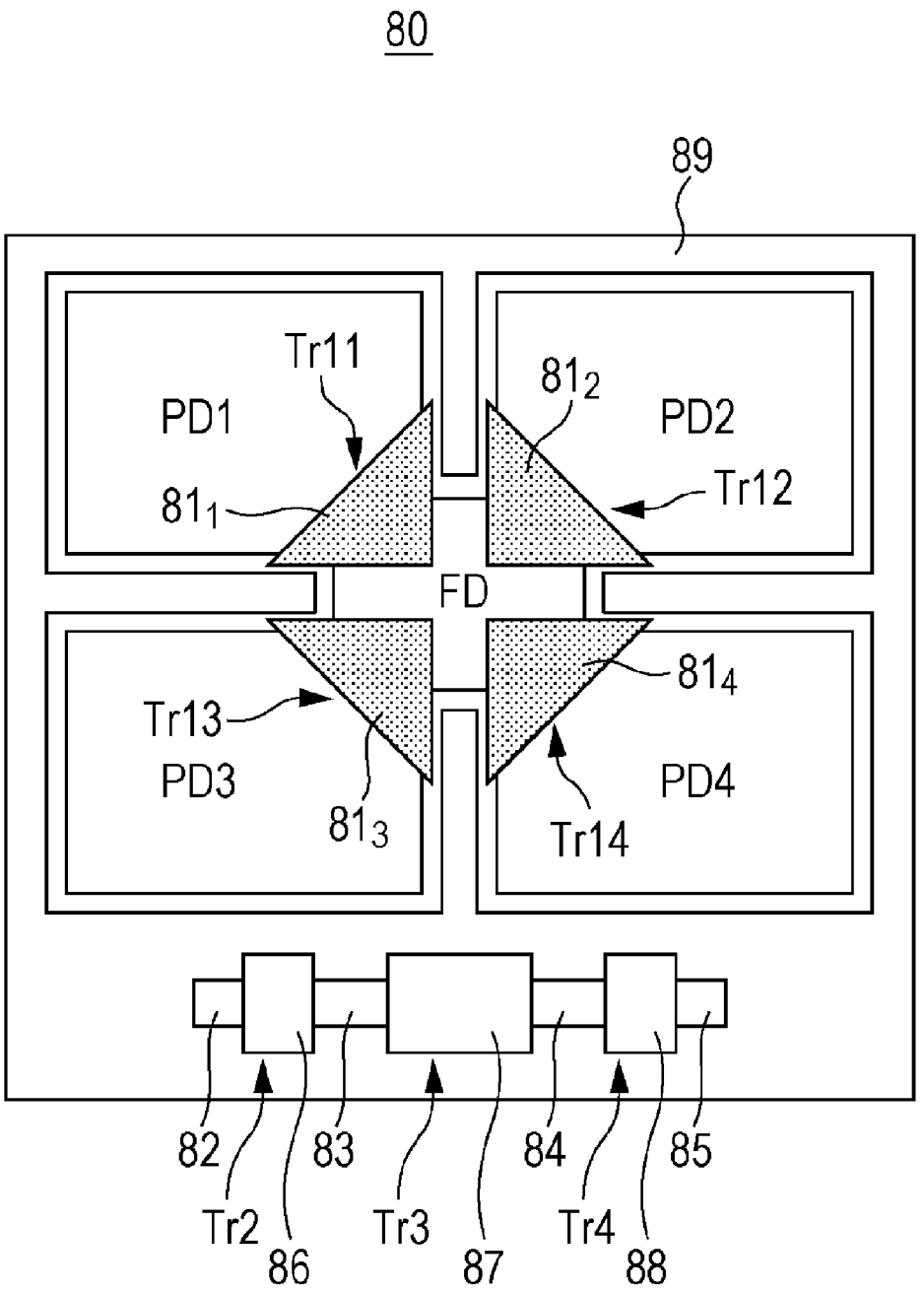
80
89
Tr11
PD1
$81_1$
$81_2$
PD2
Tr12
FD
Tr13
PD3
$81_3$
$81_4$
PD4
Tr14
82
83
84
85
Tr2
86
Tr3
87
Tr4
88

FIG. 14

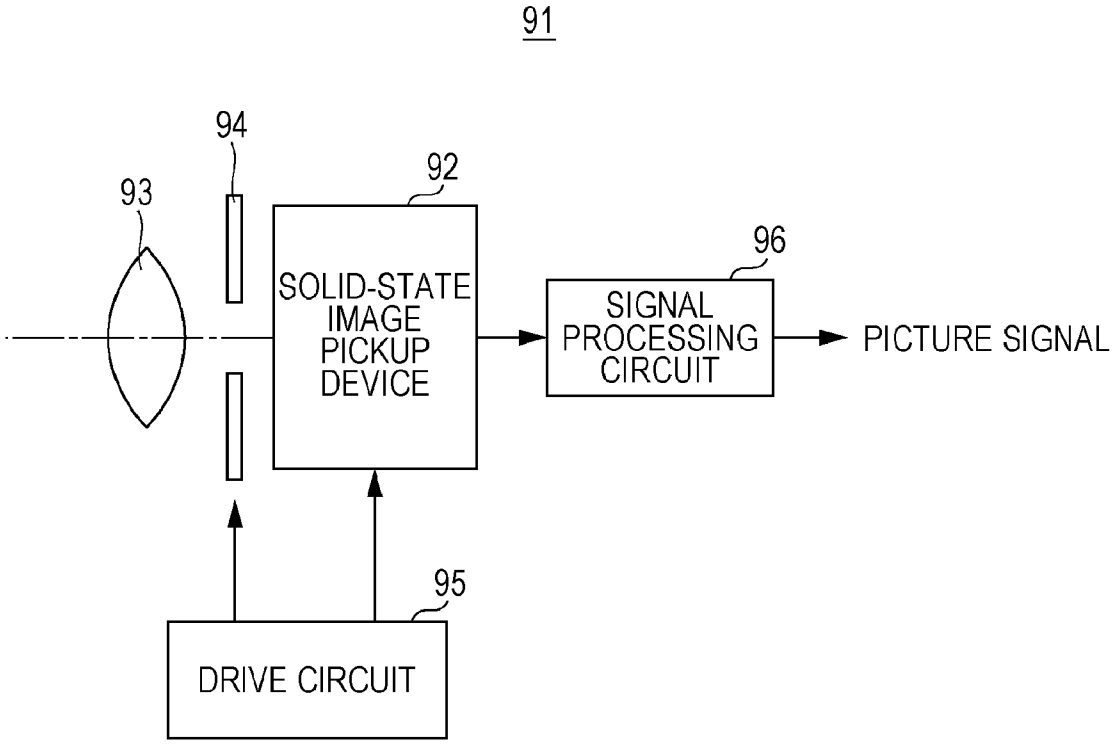
91
94
93
92
96
SOLID-STATE IMAGE PICKUP DEVICE
SIGNAL PROCESSING CIRCUIT
PICTURE SIGNAL
95
DRIVE CIRCUIT

# SOLID-STATE IMAGING DEVICE, MANUFACTURING METHOD THEREOF, AND ELECTRONIC APPARATUS

## BACKGROUND

**[0001]** The present disclosure relates to a solid-state imaging device, a manufacturing method thereof, and an electronic apparatus, such as a camera, including a solid-state imaging device.

**[0002]** As a solid-state imaging device (image sensor), a CMOS solid-state imaging device has been widely spread. The CMOS solid-state imaging device is used, for example, for various personal digital assistances, such as a digital still camera, a digital video camera, and a mobile phone having a camera function.

**[0003]** The CMOS solid-state imaging device is formed of a plurality of pixels arranged in a two-dimensional matrix, each pixel unit having a photodiode which functions as a light receiving portion and a plurality of pixel transistors. The number of the pixel transistors is generally four, a transfer transistor, an amplification transistor, a reset transistor, and a selection transistor, or is three out of the above four other than the selection transistor. Alternatively, these pixel transistors may be shared by a plurality of photodiodes. In order to read out a signal current by applying a desired pulse voltage to these pixel transistors, terminals of the pixel transistors are connected through multilayer wires.

**[0004]** In a backside illuminated solid-state imaging device, a multilayer wiring layer containing layers of wires with at least one interlayer insulating film provided therebetween is disposed on a surface of a semiconductor substrate in which photodiodes and pixel transistors are formed, a support substrate is adhered to a multilayer wiring layer side, and the thickness of the semiconductor substrate is subsequently reduced. That is, the semiconductor substrate is polished from a rear surface side thereof to obtain a desired thickness. Next, a color filter and an on-chip lens are formed on a polished surface, so that a backside illuminated solid-state imaging device is formed.

**[0005]** In the backside illuminated solid-state imaging device, since the structure is formed so that light is incident on a photodiode from a rear surface side of the substrate, the numerical aperture is increased, and a solid-state imaging device having high sensitivity is realized.

**[0006]** In addition, in the solid-state imaging device, as an element isolation region for isolating pixels from each other, for example, there may be mentioned an element isolation region by an impurity diffusion layer, an element isolation region by a trench structure, or an element isolation region by a selective oxidation (local oxidation of silicon, LOCOS) layer. The impurity diffusion layer and the trench structure are suitably used for a microfabrication process as compared to the selective oxidation layer.

**[0007]** As documents relating to the CMOS solid-state imaging device, for example, Japanese Unexamined Patent Application Publication Nos. 2003-31785, 2005-302909, 2005-353955, and 2007-258684 may be mentioned. Japanese Unexamined Patent Application Publication No. 2003-31785 has disclosed a basic structure of a backside illuminated CMOS solid-state imaging device in which wires are formed at one surface side of a semiconductor substrate in which photodiodes are formed and in which visible light is allowed to be incident on the other surface side. Japanese Unexamined Patent Application Publication No. 2005-302909 has disclosed a shallow trench isolation (STI) structure used as an element isolation region of a CMOS solid-state imaging device. Japanese Unexamined Patent Application Publication No. 2005-353955 has disclosed the structure in which in a backside illuminated CMOS solid-state imaging device, a light-shielding layer is disposed at a rear surface side. Japanese Unexamined Patent Application Publication No. 2007-258684 has disclosed the structure in which in a backside illuminated CMOS solid-state imaging device, a film having a negative fixed charge is formed on a light receiving surface so as to suppress the generation of dark current at the interface. As the element isolation region of a solid-state imaging device, the structure formed by a trench, the inside of which is maintained hollow, has also been disclosed (see Japanese Unexamined Patent Application Publication No. 2004-228407).

## SUMMARY

**[0008]** In a backside illuminated solid-state imaging device, since light is incident from a rear surface side of a semiconductor substrate in which photodiodes are formed, photoelectric conversion occurs most frequently at the rear surface side. Accordingly, it is important to suppress the occurrence of color mixture caused by leakage of charge (such as electron) photoelectrically converted in the vicinity of the rear surface side into an adjacent pixel.

**[0009]** By the way, when an element isolation region between adjacent photodiodes is formed by an impurity diffusion layer using ion implantation from a substrate surface side and an annealing treatment, an implanted impurity spreads more in a lateral direction at a deeper position at a rear surface side of the substrate due to scattering of high-energy ion implantation. For this reason, the electric field of a fine pixel in a lateral direction in the vicinity of the rear surface of the substrate is weak, and it is difficult to suppress the occurrence of color mixture caused by leakage of photoelectrically converted charge into an adjacent pixel.

**[0010]** Accordingly, there has been studied a method for forming an element isolation region by an impurity diffusion layer which is formed by implanting an impurity from a rear surface of a substrate by ion implantation, followed by performing laser annealing or the like to activate only an outermost surface of silicon so as not to damage multilayer wires formed beforehand. However, the suppression of thermal diffusion of the impurity and the recovery of crystal defects caused by ion implantation may not be easily achieved at the same time.

**[0011]** In addition, a method has also been studied in which an element isolation region which physically isolates pixels is formed by a trench formed in a rear surface of a substrate so as to suppress leakage of charge into an adjacent pixel. However, since heat is not allowed to be applied to multilayer wires formed beforehand as in the case described above, it is difficult to solve the causes of the generation of white spots and dark current by the trench formation. That is, there have been problems in that an inside wall of the trench may not be placed in a hole pinning state by a p-type impurity layer and the defects are not recovered by annealing or the like.

**[0012]** In addition, the leakage of charge into an adjacent pixel results in a decrease in sensitivity.

**[0013]** In consideration of the problems described above, it is desirable to provide a solid-state imaging device which suppresses the generation of white spots and dark current and

the occurrence of color mixture and which improves the sensitivity and a method for manufacturing the solid-state imaging device.

**[0014]** In addition, it is also desirable to provide an electronic apparatus, such as a camera, including the solid-state imaging device described above.

**[0015]** According to an embodiment of the present disclosure, there is provided a solid-state imaging device which includes a pixel region in which pixels each having a photoelectric conversion portion and a plurality of pixel transistors are arranged in a two-dimensional matrix and an element isolation region isolating the pixels which is provided in the pixel region and which includes a semiconductor layer provided in a trench by an epitaxial growth. In addition, the above solid-state imaging device is formed as a backside illuminated type in which a light receiving surface is provided at a rear surface side of a semiconductor substrate opposite to a multilayer wiring layer.

**[0016]** In the solid-state imaging device described above, the semiconductor layer is filled in the trench by an epitaxial growth to form the element isolation region. Since being formed from an epitaxial growth layer, this semiconductor layer has no implantation defects caused by ion implantation and functions as a pinning layer having a charge opposite to a signal charge. Since the semiconductor layer is formed from an epitaxial growth layer, unlike the case of ion implantation, no impurities spread in a lateral direction even at a deep position in the substrate, the electric field strength at a rear surface of the substrate can be maintained high, and the isolation power of the element isolation region can be enhanced.

**[0017]** According to an embodiment of the present disclosure, there is provided a method for manufacturing a solid-state imaging device which includes: forming a trench having a predetermined depth in a semiconductor substrate from a surface thereof; and filling a semiconductor layer in the trench by an epitaxial growth to form an element isolation region. Subsequently, the method described above includes: forming pixels each having a photoelectric conversion portion and a plurality of pixel transistors in the semiconductor substrate to form a pixel region in which the pixels isolated by the element isolation region are arranged in a two-dimensional matrix; and forming a multilayer wiring layer on the surface of the semiconductor substrate in which a plurality of layers of wires is arranged with at least one interlayer insulating film provided therebetween. Next, the method described above also includes: adhering a support substrate on the multilayer wiring layer; and reducing the thickness of the semiconductor substrate so that the element isolation region is exposed to a rear surface of the semiconductor substrate and so that the rear surface thereof functions as a light-receiving surface.

**[0018]** In the method for manufacturing a solid-state imaging device according to an embodiment of the present disclosure, there are provided the steps of filling a semiconductor layer in a trench by an epitaxial growth to form an element isolation region and reducing the thickness of a semiconductor substrate so that the element isolation region is exposed to a rear surface of the semiconductor substrate and so that the rear surface thereof functions as a light-receiving surface. By the steps, the semiconductor layer in the trench has a pinning function on the charge opposite to a signal charge as described above, and an element isolation region having a high isolation power can be formed.

**[0019]** According to an embodiment of the present disclosure, there is provided an electronic apparatus which includes a solid-state imaging device, an optical system which guides incident light to a photoelectric conversion portion of the solid-state imaging device, and a signal processing circuit which processes an output signal of the solid-state imaging device. The solid-state imaging device includes a pixel region in which pixels each having a photoelectric conversion portion and a plurality of pixel transistors are arranged in a two-dimensional matrix and an element isolation region isolating the pixels which is provided in the pixel region and which includes a semiconductor layer provided in a trench by an epitaxial growth. Furthermore, the solid-state imaging device is formed as a backside illuminated type in which a light-receiving surface is provided at a rear surface side of a semiconductor substrate opposite to a multilayer wiring layer.

**[0020]** In the electronic apparatus described above, since the solid-state imaging device according to an embodiment of the present disclosure is used, in the element isolation region of the solid-state imaging device, a pinning function on the charge opposite to a signal charge and a high element isolation power are obtained.

**[0021]** In the solid-state imaging device according to an embodiment of the present disclosure, since the semiconductor layer in the trench by an epitaxial growth functions as a pinning layer, the generation of white spots and dark current in the element isolation region can be suppressed. Since the isolation power of the element isolation region is enhanced, the leakage of photoelectrically converted charge into an adjacent pixel can be prevented, the occurrence of color mixture can be suppressed, and the sensitivity can be improved.

**[0022]** By the method for manufacturing a solid-state imaging device according to an embodiment of the present disclosure, a solid-state imaging device which suppresses the generation of white spots and dark current and the occurrence of color mixture and which improves the sensitivity can be manufactured.

**[0023]** Since the electronic apparatus according to an embodiment of the present disclosure includes the solid-state imaging device according to an embodiment of the present disclosure, an electronic apparatus, such as a high definition camera, which suppresses the generation of white spots and dark current and the occurrence of color mixture and which improves the sensitivity can be provided.

## BRIEF DESCRIPTION OF THE DRAWINGS

**[0024]** FIG. **1** is a schematic structural view showing one example of a solid-state imaging device applied to each embodiment of the present disclosure;

**[0025]** FIG. **2** is a schematic structural view showing a solid-state imaging device according to a first embodiment of the present disclosure;

**[0026]** FIGS. **3**A to **3**C are cross-sectional views each showing one example of a method for manufacturing the solid-state imaging device according to the first embodiment (Part 1);

**[0027]** FIGS. **4**D to **4**F are cross-sectional views each showing one example of the method for manufacturing the solid-state imaging device according to the first embodiment (Part 2);

**[0028]** FIGS. **5**G and **5**H are cross-sectional views each showing one example of the method for manufacturing the solid-state imaging device according to the first embodiment (Part 3);

**[0029]** FIG. **6** is a cross-sectional view showing one example of the method for manufacturing the solid-state imaging device according to the first embodiment (Part 4);

**[0030]** FIGS. **7**A and **7**B are cross-sectional views each showing one example in which a p-type semiconductor layer having a void therein is formed in a trench by an epitaxial growth;

**[0031]** FIG. **8** is a schematic cross-sectional view illustrating a method for forming an element isolation region according to an embodiment of the present disclosure;

**[0032]** FIG. **9**A is a schematic structural view showing an important section of a solid-state imaging device according to a second embodiment of the present disclosure;

**[0033]** FIG. **9**B is an enlarged cross-sectional view of an element isolation region shown in FIG. **9**A;

**[0034]** FIG. **10**A is a schematic structural view showing an important section of a solid-state imaging device according to a third embodiment of the present disclosure;

**[0035]** FIG. **10**B is an enlarged cross-sectional view of an element isolation region shown in FIG. **10**A;

**[0036]** FIG. **11**A is a schematic structural view showing an important section of a solid-state imaging device according to a fourth embodiment of the present disclosure;

**[0037]** FIG. **11**B is an enlarged cross-sectional view of an element isolation region shown in FIG. **11**A;

**[0038]** FIG. **12**A is a schematic structural view showing an important section of a solid-state imaging device according to a fifth embodiment of the present disclosure;

**[0039]** FIG. **12**B is an enlarged cross-sectional view of an element isolation region shown in FIG. **12**A;

**[0040]** FIG. **13** is a schematic structural view of an important section of a solid-state imaging device according to a sixth embodiment of the present disclosure; and

**[0041]** FIG. **14** is a schematic structural view of an electronic apparatus according to a seventh embodiment of the present disclosure.

## DETAILED DESCRIPTION OF EMBODIMENTS

**[0042]** Hereinafter, the modes (which will be each referred to as "embodiment") for carrying out the present disclosure will be described. Description will be made in the following order.

**[0043]** 1. Schematic structural example of a CMOS solid-state imaging device

**[0044]** 2. First embodiment (a structural example of the solid-state imaging device and an example of a method for manufacturing the same)

**[0045]** 3. Second embodiment (a structural example of the solid-state imaging device and an example of a method for manufacturing the same)

**[0046]** 4. Third embodiment (a structural example of the solid-state imaging device and an example of a method for manufacturing the same)

**[0047]** 5. Fourth embodiment (a structural example of the solid-state imaging device and an example of a method for manufacturing the same)

**[0048]** 6. Fifth embodiment (a structural example of the solid-state imaging device and an example of a method for manufacturing the same)

**[0049]** 7. Sixth embodiment (a structural example of the solid-state imaging device and an example of a method for manufacturing the same)

**[0050]** 8. Seventh embodiment (a structural example of an electronic apparatus)

### 1. Schematic Structural Example of CMOS Solid-State Imaging Device

**[0051]** FIG. **1** shows a schematic structure of one example of a MOS solid-state imaging device applied to each embodiment of the present disclosure. As shown in FIG. **1**, a solid-state imaging device **1** of this embodiment includes a pixel region (so-called imaging region) **3** in which a plurality of pixels **2** each having a photoelectric conversion portion is regularly arranged in a semiconductor substrate **11**, such as a silicon substrate, in a two-dimensional matrix and a peripheral circuit portion. As the pixel **2**, a unit pixel having one photoelectric conversion portion and a plurality of pixel transistors may be used. In addition, as the pixel **2**, a so-called shared pixel structure (pixel structure having a floating diffusion and an amplification transistor shared by a plurality of photoelectric conversion regions) in which a plurality of photoelectric conversion portions shares the pixel transistors other than a transfer transistor may be used. The number of the pixel transistors may be four, a transfer transistor, an amplification transistor, a reset transistor, and a selection transistor, or may also be three out of the above four other than the selection transistor.

**[0052]** The peripheral circuit portion includes so-called logic circuits, such as a vertical drive circuit **4**, a column signal processing circuit **5**, a horizontal drive circuit **6**, an output circuit **7**, and a control circuit **8**.

**[0053]** The control circuit **8** receives an input clock and data instructing an operational mode or the like and outputs data of internal information or the like of the solid-state imaging device. That is, in the control circuit **8**, a clock signal and a control signal used as the basis of operations, for example, of the vertical drive circuit **4**, the column signal processing circuit **5**, and the horizontal drive circuit **6** are generated based on a vertical synchronizing signal, a horizontal synchronizing signal, and a master clock. In addition, these signals are input, for example, into the vertical drive circuit **4**, the column signal processing circuit **5**, and the horizontal drive circuit **6**.

**[0054]** The vertical drive circuit **4** is formed, for example, of a shift register, selects a pixel drive wire, supplies a pulse for driving a pixel to the selected pixel drive wire, and drives pixels in units of rows. That is, the vertical drive circuit **4** sequentially selectively scans each of the pixels **2** of the pixel region **3** in units of rows in a vertical direction. In addition, the vertical drive circuit **4** supplies a column signal processing circuit **5**, through a corresponding vertical signal line **9**, with a pixel signal based on a signal charge generated in accordance with the amount of received light in a photoelectric conversion element, such as a photodiode, of each pixel **2**.

**[0055]** The column signal processing circuit **5** is arranged, for example, for every column of the pixels **2** and performs signal processing, such as noise removal, for signals output from the pixels **2** of one row, for every pixel column. That is, the column signal processing circuit **5** performs signal-processing, such as CDS for removing fixed pattern noise specific to the pixel **2**, signal amplification, and A-D conversion. A horizontal selecting switch (not shown) is connected between an output stage of the column signal processing circuit **5** and a horizontal signal line **10**.

**[0056]** The horizontal drive circuit **6** is formed, for example, of a shift register, sequentially selects each column signal processing circuit **5** by sequentially outputting a hori-

zontal scanning pulse, and allows each column signal processing circuit **5** to output a pixel signal to the horizontal signal line **10**.

**[0057]** The output circuit **7** performs signal processing for signals sequentially supplied from the column signal processing circuits **5** through the horizontal signal line **10** and outputs processed signals. For example, the output circuit **7** may perform only buffering or may perform a black-level adjustment, column-variation correction, various types of digital signal processing, and the like. An input/output terminal **12** exchanges signals with the outside.

## 2. First Embodiment

[Structural Example of Solid-State Imaging Device]

**[0058]** A solid-state imaging device, a backside illuminated CMOS solid-state imaging device, according to a first embodiment of the present disclosure is shown in FIG. **2**. A solid-state imaging device **21** according to the first embodiment has a pixel region in a silicon semiconductor substrate **22**, the thickness of which is reduced, in which a plurality of unit pixels each having a photodiode PD functioning as a photoelectric conversion portion and a plurality of pixel transistors is regularly arranged in a two-dimensional matrix. The photodiode PD is formed, in the entire region of the semiconductor substrate **22** in a thickness direction, of a first conductivity type functioning as both photoelectric conversion and charge storage, i.e., an n-type charge storage region **23** in this embodiment, and second conductivity types functioning to suppress the generation of dark current at two interfaces of a front and a rear surface of the substrate, i.e., p-type semiconductor regions **25** and **24** in this embodiment. The photodiode PD is formed so as to extend under the pixel transistors. The pixel transistors are formed in a p-type semiconductor well region **26** formed at the side of a surface **22***a* of the semiconductor substrate **22**. In the figure, as the pixel transistors, a transfer transistor Tr**1** is representatively shown. The transfer transistor Tr**1** is formed of the photodiode PD as a source, a floating diffusion FD formed of an n-type semiconductor region as a drain, and a transfer gate electrode **28** formed on a gate dielectric film **27** provided on the semiconductor substrate **22**.

**[0059]** A multilayer wiring layer **33** in which a plurality of layers of wires **32** is arranged with at least one interlayer insulating film **31** provided therebetween is formed at a surface side of the semiconductor substrate **22**, and a support substrate **35** is adhered to this multilayer wiring layer **33**. The arrangement of the wires **32** is not particularly limited and may also be formed on the photodiode PD. A rear surface **22***b* of the semiconductor substrate **22** opposite to the multilayer wiring layer **33** functions as a light-receiving surface, and an insulating film, such as an anti- reflection film (not shown), a light-shielding layer (not shown) preventing light from being incident on an adjacent pixel, and the like are formed on this rear surface **22***b* of the substrate. Furthermore, a color filter **36** and an on-chip lens **37** are also formed. The photodiode PD is irradiated with light from a rear surface **22***b* side of the semiconductor substrate **22** through the on-chip lens **37**.

**[0060]** In addition, in this embodiment, a trench **42** is formed in the semiconductor substrate **22**, and a semiconductor layer **43** is filled in this trench **42** by an epitaxial growth, thereby forming an element isolation region **41** for isolating the pixels from each other. The semiconductor layer **43** is formed of a p-type semiconductor layer having a conductivity opposite to that of the n-type conductivity type **23** of the photodiode PD. The semiconductor layer **43** by an epitaxial growth is not fully filled in the trench to have a void **44** therein which extends in a depth direction and which is exposed to the rear surface **22***b* when the thickness of the semiconductor substrate **22** is reduced.

**[0061]** As shown by a manufacturing method which will be described later, after the p-type semiconductor layer **43** is formed in the trench **42** by an epitaxial growth to form the element isolation region **41**, and activation of the p-type semiconductor layer **43** and recovery of damage done to the interface of the trench **42** are performed by annealing, the pixels and the multilayer wiring layer **33** are formed.

**[0062]** The n-type charge storage region **23** of the photodiode PD preferably has a concentration distribution such that the impurity concentration is high at the surface **22***a* side of the semiconductor substrate **22** and gradually decreases therefrom toward the rear surface **22***b* side. When the concentration distribution as described above is obtained, a charge photoelectrically converted in the vicinity of the rear surface **22***b* is likely to move toward the surface **22***a* side.

**[0063]** According to the solid-state imaging device **21** of the first embodiment, the element isolation region **41** is formed by filling the p-type semiconductor layer **43** in the trench **42** by an epitaxial growth. The p-type semiconductor layer **43** formed by an epitaxial growth has no implantation defects caused by ion implantation and is able to function as a hole pinning layer. In addition, since the trench **42** is processed by an annealing treatment before the multilayer wiring layer is formed, the etching damage to the trench **42** is recovered. As described above, in the element isolation region **41**, since the trench **42** has no etching damage, and the p-type semiconductor layer **43** is formed as a pinning layer, the generation of white spots and dark current at the interface of the element isolation region **41** can be suppressed without any adverse influence of heat on the wires **32**. In addition, since being formed by an epitaxial growth, the p-type semiconductor layer **43** does not spread in a lateral direction even at a deep position at the substrate side unlike the case of ion implantation, the uniform impurity concentration is maintained, and the electric field strength in the vicinity of the rear surface **22***b* can be maintained high. Accordingly, the isolation power of the element isolation region **41** can be enhanced, the leakage of a photoelectrically converted charge into an adjacent pixel can be prevented, and the occurrence of color mixture can also be suppressed.

**[0064]** Furthermore, in the element isolation region **41**, since the void **44** extends in a depth direction and is exposed to the rear surface **22***b*, adjacent pixels are physically isolated from each other by this void **44**. Therefore, the leakage of charge in the photodiode PD into an adjacent pixel can be substantially prevented. Since the charge is suppressed from leaking into an adjacent pixel at the rear surface **22***b* side, the occurrence of color mixture can be suppressed, and the sensitivity can be improved.

**[0065]** Since the void **44** is formed in the element isolation region **41**, even if inclined incident light is incident thereon, the incident light is reflected at the interface between the void **44** and the p-type semiconductor layer **43** due to the difference in refractive index. Since the leakage of light into an adjacent pixel is prevented by this reflection, photoelectric conversion is not carried out in an adjacent pixel, and the occurrence of color mixture can be suppressed. In addition, since the incident light reflects at the interface between the

void **44** and the p-type semiconductor layer **43** and enters the corresponding photodiode PD, the sensitivity can be improved.

**[0066]** In the n-type charge storage region **23** of the photodiode PD, when an impurity concentration distribution in which the impurity concentration is increased from the rear surface side to the surface side is formed, a charge photoelectrically converted in the vicinity of the rear surface moves to the surface side along the impurity concentration distribution and is stored. Hence, when the charge is read out, the charge transfer efficiency to the floating diffusion portion FD can be improved.

**[0067]** According to this embodiment, a backside illuminated solid-state imaging device can be provided which suppresses the occurrence of color mixture and which can obtain a high sensitive and quality image having a high dynamic range.

[Example of Manufacturing Method of Solid-State Imaging Device]

**[0068]** One example of a method for manufacturing the solid-state imaging device **21** according to the first embodiment will be described with reference to in FIGS. **3**A to **6**. First, in this example, the p-type silicon semiconductor substrate **22** is prepared as shown in FIG. **3**A.

**[0069]** Next, as shown in FIG. **3**B, an n-type impurity **51** is ion-implanted in the semiconductor substrate **22** from the surface **22***a* side, followed by performing an annealing treatment at a predetermined temperature, thereby forming an n-type semiconductor region **52** functioning as a charge storage region of a photodiode which is to be formed. This n-type semiconductor region **52** is preferably formed by performing ion implantation a plurality of times by changing the implantation energy and the dose to obtain an impurity concentration distribution by an annealing treatment so that the impurity concentration gradually decreases in a depth direction from the surface **22***a*. The n-type semiconductor region **52** is formed in a region corresponding to the pixel region. The n-type semiconductor region **52** is preferably formed deeper than the thickness of the semiconductor substrate **22**, which is a thickness reduced in a subsequent step, that is, than a depth d**1** of an active layer **61** in which the photodiode is to be formed.

**[0070]** Next, as shown in FIG. **3**C, the trench **42** is formed in the semiconductor substrate **22** deeper from the surface **22***a* than the depth d**1** of the active layer **61** in which the photodiode is to be formed. This trench **42** is formed at a position corresponding to the element isolation region.

**[0071]** Next, as shown in FIG. **4**D, the high-concentration p-type semiconductor layer **43** is filled in the trench **42** by an epitaxial growth to form the element isolation region **41**. This p-type semiconductor layer **43** is epitaxially grown so as to form the void **44** therein which extends in a depth direction.

**[0072]** In order to fill the p-type semiconductor layer **43** having the void **44** in the trench **42** by an epitaxial growth, the following methods may be mentioned. For example, as shown in FIG. **7**A, after a trench **42**A (indicated by a chain line) is formed by anisotropic etching (dry etching), a laminate insulating film **56** of a silicon oxide film **54** and a silicon nitride film **55** is formed on the surface **22***a*, and the trench **42**A is isotropically etched using the laminate insulating film **56** as a mask. By the isotropic etching, a trench **42**B having an inclined wall portion **53** at each upper edge is formed. Next, when an epitaxial growth is performed from the inside surface of the trench **42**B, as shown in FIG. **7**B, the inclined wall portions **53** are closed, and the trench **42**B will be filled with the p-type semiconductor layer **43** having the void **44** which extends in a depth direction.

**[0073]** As another method, epitaxial growth conditions for forming the void **44** inside will be shown by way of example.

**[0074]** Substrate temperature: 750° C. to 850° C.

**[0075]** Pressure in chamber: 10 to 760 Torr

**[0076]** Flow rate of $SiH_2Cl_2$ (DCS): 10 to 100 sccm

**[0077]** Flow rate of HCl: 10 to 300 sccm

**[0078]** Flow rate of $H_2$: 10 to 50 slm

**[0079]** Flow rate of $B_2H_6$ (100 ppm/H2): 0.01 to 10 sccm

**[0080]** Next, for example, an annealing treatment is performed at approximately 800° C. for activation of the p-type semiconductor layer **43** filled in the trench **42** and crystal recovery of the trench interface. This annealing treatment may also be performed by a heat treatment which is to be performed in a subsequent step. By the annealing treatment, as shown in FIG. **8**, the p-type impurity of the filled p-type semiconductor layer **43** diffuses to a substrate **22** side, and the p-type semiconductor layer **43** substantially covers the trench interface, so that the influence of etching damage done to the trench **42** can be eliminated.

**[0081]** Next, as shown in FIG. **4**E, the p-type semiconductor well region **26** is formed in a part of the n-type semiconductor region **52** at a surface side corresponding to each pixel isolated by the element isolation region **41**. The p-type semiconductor region **25** is formed in the surface of the n-type charge storage region **23** which functions both as the photoelectric conversion and the charge storage and which is formed by the n-type semiconductor region **52** of each pixel, thereby forming the photodiode PD. The p-type semiconductor region **25** also functions as an accumulation layer for dark-current suppression. Furthermore, the floating diffusion portion FD is formed in the p-type semiconductor well region **26** by an n-type semiconductor region, and the transfer gate electrode **28** is formed on the gate dielectric film **27**, so that the transfer transistor Tr**1** is formed. When this transfer transistor Tr**1** is formed, the other pixel transistors, such as a reset transistor Tr**2**, an amplification transistor Tr**3**, and a selection transistor Tr**4**, each having a pair of source/drain regions and a gate electrode, are simultaneously formed in the other part of the p-type semiconductor well region **26**. As described above, the pixel region in which the pixels are arranged in a two-dimensional matrix is formed. Furthermore, the peripheral circuit portion (not shown) by CMOS transistors is formed in the periphery of the pixel region.

**[0082]** Next, as shown in FIG. **4**F, the multilayer wiring layer **33** in which a plurality of layers of the wires **32** is disposed with at least one interlayer insulating film **31** provided therebetween is formed on the surface of the semiconductor substrate **22**.

**[0083]** Next, as shown in FIG. **5**G, the support substrate **35** formed, for example, of a silicon substrate is adhered on the multilayer wiring layer **33**.

**[0084]** Next, as shown in FIG. **5**H, the thickness of the semiconductor substrate **22** is reduced by grinding and polishing from the rear surface side thereof so that the active layer **61** having a thickness d**1** is obtained. That is, the thickness of the semiconductor substrate **22** is reduced to the position of the active layer **61** so that the void **44** of the element isolation region **41** is exposed to the rear surface **22***b* of the semiconductor substrate **22**.

**[0085]** Next, as shown in FIG. **6**, the rear surface **22***b* of the semiconductor substrate **22**, the thickness of which is reduced, is formed as a light-receiving surface, and the p-type semiconductor region **24** which forms the photodiode PD is formed in the rear surface **22***b* functioning as the light-receiving surface of the n-type charge storage region **23** of the photodiode PD. The p-type semiconductor region **24** also functions as an accumulation layer for dark-current suppression. A light-shielding layer **63** is formed above the rear surface **22***b* with an insulating film **62**, such as an anti-reflection film, provided therebetween at a position at which light-shielding is to be performed, that is, at a position corresponding to the element isolation region **41** in the figure. Furthermore, the color filter **36** and the on-chip lens **37** are formed on a planarizing film **64** provided on the semiconductor substrate **22**, so that the targeted solid-state imaging device **21** is obtained.

**[0086]** The method for manufacturing a solid-state imaging device according to this embodiment includes filling the p-type semiconductor layer **43** in the trench **42** by an epitaxial growth to form the element isolation region **41**. Since the p-type semiconductor layer **43** is filled by an epitaxial growth, no ion implantation defects are generated, and hence the p-type semiconductor layer **43** is formed as an excellent hole pinning layer. Accordingly, the backside illuminated solid-state imaging device **21** can be manufactured which suppresses the generation of white spots and dark current and the occurrence of color mixture and which improves the sensitivity.

**[0087]** Since the p-type semiconductor layer **43** is formed by an epitaxial growth so as to have the void **44** inside, even if inclined incident light is incident thereon, the incident light is reflected at the interface between the p-type semiconductor layer **43** and the void **44** due to the difference in refractive index therebetween. Accordingly, the leakage of incident light into an adjacent pixel can be prevented, and the occurrence of color mixture can be suppressed. Since the thickness of the semiconductor substrate **22** is reduced so as to expose the void **44** to the rear surface **22***b*, the occurrence of color mixture can be further suppressed.

**[0088]** In the formation of the p-type semiconductor layer **43** in the trench **42**, since the void **44** is allowed to be formed, the epitaxial growth can be performed in a lateral direction growth instead of in a bottom-up direction, and a time necessary for the epitaxial growth can be substantially reduced. Since the void **44** is exposed to the rear surface **22***b*, the variation in isolation performance caused by variation in depth and size of the void **44** and the variation in p-type impurity concentration at the lower side can be further prevented. In addition, when the void **44** is exposed at the rear surface **22***b* side, the degree of formation of the void **44** can be checked by measuring the line width of the void **44**.

**[0089]** Since the trench **42** is formed by a surface process of the semiconductor substrate **22**, and the void **44** is exposed by a rear surface process, lithographic misalignment between the element isolation region **41** and a light condensing structure, such as the on-chip lens, on the rear surface **22***b* can be suppressed. Since the trench **42** is filled back by an epitaxial growth of the p-type semiconductor layer **43** of silicon, even if a heat cycle is applied thereto, no internal stress is generated, and crystal defects caused by a stress concentrated to the corner of the trench **42** is not generated.

## 3. Second Embodiment

[Structural Example of Solid-State Imaging Device]

**[0090]** A solid-state imaging device, a backside illuminated CMOS solid-state imaging device, according to a second embodiment of the present disclosure is shown in FIGS. **9**A and **9**B. In a solid-state imaging device **67** according to the second embodiment, an element isolation region **68** for isolating pixels is formed such that the p-type semiconductor layer **43** is provided in the trench **42** by an epitaxial growth, and an insulating film **69** is filled in the void **44** inside this p-type semiconductor layer **43**. This insulating film **69** is filled so as not to form a void inside. As shown in FIG. **9**A, the insulating film **69** can be formed over the entire surface containing the photodiode PD of the surface **22***a* as well as in the void **44**. Alternatively, the insulating film **69** can be formed only in the void **44** as shown in FIG. **9**B.

**[0091]** As the insulating film **69**, an insulating film, such as a silicon oxide film or a silicon nitride film, may be used. In addition, as the insulating film **69**, an insulating film having a negative fixed charge may also be used. As the insulating film having a negative fixed charge, for example, there may be used a film of hafnium dioxide ($HfO_2$), dialuminum trioxide ($Al_2O_3$), ditantalum pentaoxide ($Ta_2O_5$), dilanthanum trioxide ($La_2O_3$), or diyttrium trioxide ($Y_2O_3$). In addition, as the insulating film having a negative fixed charge, for example, oxide films of Zn, Pr, Nd, Pm, Sm, Eu, Gd, Tb, Dy, Ho, Er, Tm, Yb, Lu, Ti, and the like may also be used. As a method for forming the insulating film having a negative fixed charge, for example, an atomic layer deposition (ALD) method or a metal-organic chemical vapor deposition (MOCVD) method may be used. When the insulating film having a negative fixed charge is used, one type of film or a laminate containing a plurality of types of films may be used. For example, a laminate containing two types of films may be used as the insulating film having a negative fixed charge.

**[0092]** Since the other structure is similar to that described in the first embodiment, in FIGS. **9**A and **9**B, elements corresponding to those shown in FIG. **2** are designated by the same reference numerals as those described above, and a duplicated description will be omitted.

**[0093]** As one example of a method for manufacturing the solid-state imaging device **67** according to the second embodiment, after the above step of reducing the thickness of the semiconductor substrate shown in FIG. **5**H, the insulating film **69** is formed so as to fill the inside of the void **44** exposed to the rear surface. A process including the step of reducing the thickness of the semiconductor substrate and the preceding steps and a process performed after the step of forming the insulating film **69** so as to fill the inside of the void **44** are similar to those of the method for manufacturing a solid-state imaging device according to the first embodiment described above (see FIGS. **3**A to **5**H and FIG. **6**).

**[0094]** According to the solid-state imaging device **67** of the second embodiment, the p-type semiconductor layer **43** having the void **44** is formed in the trench **42**, and the insulating film **69** is further filled in the void **44**, so that the element isolation region **68** is formed. Since the insulating film **69** is filled in the void **44**, adjacent pixels are further electrically insulated from each other, thereby suppressing the leakage of photoelectrically converted charge into an adjacent pixel. In addition, since the filled insulating film **69** has a refractive index different from that of the p-type semiconductor layer **43**, even if inclined incident light is incident thereon, the light is not photoelectrically converted in an adjacent pixel after passing through the element isolation region **68**. That is, inclined incident light is reflected at the

interface between the silicon and the insulating film and does not leak outside from the pixel, and hence no color mixture occurs.

**[0095]** When the insulating film having a negative fixed charge is used as the insulating film **69**, the hole pinning state by the p-type semiconductor layer **43** of the element isolation region **68** can be enhanced. In addition, when the insulating film having a negative fixed charge is formed to extend on the light-receiving surface of the photodiode PD as shown in FIG. **9**A, the hole pinning state at the interface of the photodiode PD and the insulating film, that is, of the p-type semiconductor region **24**, can be enhanced. Accordingly, the generation of white spots and dark current can be further suppressed.

**[0096]** In addition, in the solid-state imaging device **67** according to the second embodiment and the manufacturing method thereof, effects similar to those described in the first embodiment can be obtained.

## 4. Third Embodiment

[Structural Example of Solid-State Imaging Device]

**[0097]** A solid-state imaging device, a backside illuminated CMOS solid-state imaging device, according to a third embodiment of the present disclosure is shown in FIGS. **10**A and **10**B. A solid-state imaging device **71** according to the third embodiment is formed such that an element isolation region **72** isolating pixels has the p-type semiconductor layer **43** in the trench **42** by an epitaxial growth, and a light-shielding layer **73** is filled in the void **44** inside this p-type semiconductor layer **43** with the insulating film **69** provided therebetween. As the insulating film **69**, as in the case described above, a silicon oxide film, a silicon nitride film, or a film having a negative fixed charge may be used. When the insulating film having a negative fixed charge is used, one type of film or a laminate containing a plurality of types of films may be used. This laminate film may be formed, for example, of two types of films. As shown in FIG. **10**A, the insulating film **69** can be formed to extend over the entire surface containing the photodiode PD at the surface of the substrate as well as the inside of the void **44**. Alternatively, the insulating film **69** can be formed only in the void **44** as shown in FIG. **10**B.

**[0098]** A metal film can be used as the light-shielding layer **73**. In addition, in the third embodiment, since the light-shielding layer **73** is provided in the element isolation region **72**, the light-shielding layer **63** above the rear surface of the substrate shown in FIG. **6** may be omitted.

**[0099]** Since the other structure is similar to that described in the first embodiment, in FIGS. **10**A and **10**B, elements corresponding to those shown in FIG. **2** are designated by the same reference numerals as those described above, and a duplicated description will be omitted.

**[0100]** As one example of a method for manufacturing the solid-state imaging device **71** according to the third embodiment, after the above step of reducing the thickness of the semiconductor substrate shown in FIG. **5**H, the insulating film **69** and the light-shielding layer **73** are formed so as to fill the inside of the void **44** which is exposed to the rear surface. A process including the step of reducing the thickness of the semiconductor substrate **22** and the preceding steps and a process performed after the step of forming the insulating film **69** and the light-shielding layer **73** so as to fill the inside of the void **44** are similar to those of the method for manufacturing a solid-state imaging device according to the first embodiment described above (see FIGS. **3**A to **5**H and FIG. **6**). In addition, the formation of the light-shielding layer may also be omitted.

**[0101]** According to the solid-state imaging device of the third embodiment, the p-type semiconductor layer **43** having the void **44** is formed in the trench **42**, and the light-shielding layer **73** is further filled in the void **44** with the insulating film **69** provided therebetween, so that the element isolation region **72** is formed. Since the light-shielding layer **73** is formed as a central core of the element isolation region **72**, the leakage of charge into an adjacent pixel is further prevented by this light-shielding layer **73**, or inclined incident light is prevented from entering an adjacent pixel by reflection at the light-shielding layer **73**. Accordingly, since the isolation power of the element isolation region **72** is further enhanced, the occurrence of color mixture can be suppressed, and the sensitivity can be improved.

**[0102]** By the p-type semiconductor layer, the generation of white spots and dark current in the element isolation region **72** can be suppressed at the same time.

**[0103]** When the insulating film having a negative fixed charge is used as the insulating film **69**, as in the case of the second embodiment, the hole pinning state can be further enhanced, and the generation of white spots and dark current can be further suppressed.

**[0104]** In addition, in the solid-state imaging device according to the third embodiment and the manufacturing method thereof, effects similar to those described in the first embodiment can be obtained.

## 5. Fourth Embodiment

[Structural Example of Solid-State Imaging Device]

**[0105]** A solid-state imaging device, a backside illuminated CMOS solid-state imaging device, according to a fourth embodiment of the present disclosure is shown in FIGS. **11**A and **11**B. A solid-state imaging device **75** according to the fourth embodiment is formed such that an element isolation region **76** for isolating pixels has the p-type semiconductor layer **43** in the trench **42** by an epitaxial growth, and the light-shielding layer **73** is filled in the void **44** of this p-type semiconductor layer **43**. A metal film may be used as the light-shielding layer **73**.

**[0106]** Since the other structure is similar to that described in the first embodiment, in FIGS. **11**A and **11**B, elements corresponding to those shown in FIG. **2** are designated by the same reference numerals as those described above, and a duplicated description will be omitted.

**[0107]** As one example of a method for manufacturing the solid-state imaging device **75** according to the fourth embodiment, after the above step of reducing the thickness of the semiconductor substrate shown in FIG. **5**H, the light-shielding layer **73** is formed so as to fill the inside of the void **44** which is exposed to the rear surface. A process including the step of reducing the thickness of the semiconductor substrate **22** and the preceding steps and a process performed after the step of forming the light-shielding layer **73** so as to fill the void **44** are similar to those of the method for manufacturing a solid-state imaging device according to the first embodiment described above (see FIGS. **3**A to **5**H and FIG. **6**).

**[0108]** According to the solid-state imaging device **75** of the fourth embodiment, the p-type semiconductor layer **43** having the void **44** is formed in the trench **42**, and the light-shielding layer **73** is further filled in the void **44**, so that the

element isolation region **76** is formed. The leakage of charge into an adjacent pixel is further prevented by this light-shielding layer **73**, or inclined incident light is prevented from entering an adjacent pixel by reflection at the light-shielding layer. Accordingly, since the isolation power of the element isolation region **76** is further enhanced, the occurrence of color mixture can be suppressed, and the sensitivity can be improved.

**[0109]** By the p-type semiconductor layer **43**, the generation of white spots and dark current in the element isolation region **76** can be suppressed at the same time.

**[0110]** In addition, in the solid-state imaging device according to the fourth embodiment and the manufacturing method thereof, effects similar to those described in the first embodiment can be obtained.

## 6. Fifth Embodiment

[Structural Example of Solid-State Imaging Device]

**[0111]** A solid-state imaging device, a backside illuminated CMOS solid-state imaging device, according to a fifth embodiment of the present disclosure is shown in FIGS. **12**A and **12**B. A solid-state imaging device **77** according to the fifth embodiment is formed such that an element isolation region **78** for isolating pixels has the p-type semiconductor layer **43** in the trench **42** by an epitaxial growth, and the void **44** is formed inside this p-type semiconductor layer **43**. At this time, the void **44** is formed to be confined in the p-type semiconductor layer **43** and not to be exposed to the rear surface **22***b* when the thickness of the semiconductor substrate **22** is reduced.

**[0112]** Since the other structure is similar to that described in the first embodiment, in FIGS. **12**A and **12**B, elements corresponding to those shown in FIG. **2** are designated by the same reference numerals as those described above, and a duplicated description will be omitted.

**[0113]** As one example of a method for manufacturing the solid-state imaging device **77** according to the fifth embodiment, in the above step of reducing the thickness of the semiconductor substrate **22** shown in FIG. **5**H, the reduction in thickness is stopped at a position at which the void **44** is not exposed to the rear surface **22***b*. The preceding steps before the thickness of the semiconductor substrate **22** is reduced are the same as those shown in FIG. **3**A to FIG. **5**G, and the steps performed after the thickness of the semiconductor substrate is reduced so that the void **44** is not exposed are the same as those shown in FIG. **6**.

**[0114]** According to the solid-state imaging device **77** of the fifth embodiment, the p-type semiconductor layer **43** having the void **44** is formed in the trench **42**, and the element isolation region **78** is formed so that the void **44** is confined in the p-type semiconductor layer **43** without being exposed. In the element isolation region **78** as described above, as in the case of the first embodiment, adjacent pixels are also physically isolated from each other by this void **44**. Hence, since the leakage of charge into an adjacent pixel is prevented, and the isolation power of the element isolation region **78** is further enhanced, the occurrence of color mixture can be suppressed, and the sensitivity can be improved.

**[0115]** By the p-type semiconductor layer **43**, the generation of white spots and dark current in the element isolation region **78** can be suppressed at the same time.

**[0116]** In addition, in the solid-state imaging device according to the fifth embodiment and the manufacturing method thereof, effects similar to those described in the first embodiment can be obtained.

## 7. Sixth Embodiment

[Structural Example of Solid-State Imaging Device]

**[0117]** A solid-state imaging device, a backside illuminated CMOS solid-state imaging device, according to a sixth embodiment of the present disclosure is shown in FIG. **13**. This embodiment relates to a so-called shared pixel solid-state imaging device in which a plurality of photodiodes shares the pixel transistors other than the transfer transistor. In this embodiment, a 4-shared pixel solid-state imaging device will be described.

**[0118]** In a solid-state imaging device **80** according to the sixth embodiment, photodiodes PD (PD**1** to PD**4**) of total four pixels, 2 pixels in a row and 2 pixels in a row, form a single sharing unit (so-called 4-shared pixel unit), and a plurality of the single sharing units is arranged in a two-dimensional array, thereby forming the pixel region. In the single sharing unit, one floating diffusion portion FD is shared by the four photodiodes PD (PD**1** to PD**4**). In addition, as the pixel transistors, there are four transfer transistors Tr**1** (Tr**11** to Tr**14**), a reset transistor Tr**2**, an amplification transistor Tr**3**, and a selection transistor Tr**4**, and among these, the transistors Tr**2** to Tr**4** are shared. Since an equivalent circuit of this 4-shared pixel structure is common to the public, a description thereof will be omitted.

**[0119]** The floating diffusion portion FD is arranged at the center among the four photodiodes PD**1** to PD**4**. The transfer transistors Tr**11** to Tr**14** have the common floating diffusion portion FD and respective transfer gate electrodes **81** ($\mathbf{81}_1$ to $\mathbf{81}_4$) arranged between this floating diffusion portion FD and the respective photodiodes PD.

**[0120]** The reset transistor Tr**2**, the amplification transistor Tr**3**, and the selection transistor Tr**4**, shared by the four pixels, are formed in a transistor formation region under a so-called photo diode formation region in which the photodiodes PD**1** to PD**4** are formed.

**[0121]** The reset transistor Tr**2** is formed of a pair of source/drain regions **82** and **83** and a reset gate electrode **86**. The amplification transistor Tr**3** is formed of a pair of source/drain regions **83** and **84** and an amplification gate electrode **87**. The selection transistor Tr**4** is formed of a pair of source/drain regions **84** and **85** and a selection gate electrode **88**. The common floating diffusion portion FD is connected to the amplification gate electrode **87** of the amplification transistor Tr**3** and one of the source/drain regions **82** of the reset transistor Tr**2** through wires (not shown).

**[0122]** An element isolation region **89** surrounding the photodiodes PD**1** to PD**4** and the common pixel transistors Tr**2** to Tr**4** is formed by one of the element isolation regions **41**, **68**, **72**, and **76** described in the first to the fourth embodiments.

**[0123]** As one example of a method for manufacturing the solid-state imaging device **80** according to the sixth embodiment, a method in accordance with one of the manufacturing methods described in the first to the fourth embodiments may be used.

**[0124]** According to the 4-shared pixel solid-state imaging device **80** of the sixth embodiment, in the backside illuminated device, since the element isolation region **89** is formed by one of the element isolation regions **41**, **68**, **72**, **76**, and **77**,

the generation of white spots and dark current and the occurrence of color mixture can be suppressed, and the sensitivity can be improved. In addition, effects similar to those described in the first to the fourth embodiments are obtained.

**[0125]** Although the above solid-state imaging device according to each of the embodiments is formed such that electrons are used as signal charges, an n-type conductivity is used as the first conductivity, and a p-type conductivity is used as the second conductivity, the present disclosure may also be applied to a solid-state imaging device which uses holes as signal charges. In this case, an n-type conductivity is used as the second conductivity, and a p-type conductivity is used as the first conductivity.

## 8. Seventh Embodiment

[Structural Example of Electronic Apparatus]

**[0126]** The solid-state imaging device according to any one of the embodiments of the present disclosure is applicable to electronic apparatuses including a camera system, such as a digital camera or a video camera, a cellular phone having an imaging function, and another apparatus having an imaging function.

**[0127]** As one example of an electronic apparatus according to a seventh embodiment of the present disclosure, a camera is shown in FIG. **14**. The camera according to this embodiment is, for example, a video camera capable of taking a still image or an animation. A camera **91** of this embodiment includes a solid-state imaging device **92**, an optical system **93** which guides incident light to a light-receiving sensor portion of the solid-state imaging device **92**, a shutter device **94**, a drive circuit **95** which drives the solid-state imaging device **92**, and a signal processing circuit **96** which processes an output signal of the solid-state imaging device **92**.

**[0128]** One of the solid-state imaging devices of the above embodiments is applied to the solid-state imaging device **92**. The optical system (optical lens) **93** enables image light (incident light) from an object to form an image on an imaging surface of the solid-state imaging device **92**. Accordingly, signal charges are stored for a certain period of time in the solid-state imaging device **92**. The optical system **93** may be an optical lens system having a plurality of optical lenses. The shutter device **94** controls a light irradiation period and a light shielding period for the solid-state imaging device **92**. The drive circuit **95** supplies a drive signal which controls a transfer operation of the solid-state imaging device **92** and a shutter operation of the shutter device **94**. By the drive signal (timing signal) supplied from the drive circuit **95**, the solid-state imaging device **92** performs signal transfer. The signal processing circuit **96** performs various types of signal processings. An image signal processed by signal processing is stored in a storage medium, such as a memory, or is output to a monitor.

**[0129]** According to the electronic apparatus of the seventh embodiment, in the backside illuminated solid-state imaging device **92**, the generation of white spots and dark current and the occurrence of color mixture can be suppressed, and the sensitivity can be improved. According to this embodiment, an electronic apparatus can be provided which suppresses the occurrence of color mixture and which can obtain a high sensitive and quality image having a high dynamic range. For example, a camera having improved image quality can be provided.

**[0130]** The present disclosure contains subject matter related to that disclosed in Japanese Priority Patent Application JP 2010-179073 filed in the Japan Patent Office on Aug. 9, 2010, the entire contents of which are hereby incorporated by reference.

**[0131]** It should be understood by those skilled in the art that various modifications, combinations, sub-combinations and alterations may occur depending on design requirements and other factors insofar as they are within the scope of the appended claims or the equivalents thereof.

What is claimed is:

**1**. A solid-state imaging device having a backside illuminated structure, comprising:

a pixel region in which pixels each having a photoelectric conversion portion and a plurality of pixel transistors are arranged in a two-dimensional matrix;

an element isolation region isolating the pixels which is provided in the pixel region and which includes a semiconductor layer provided in a trench by an epitaxial growth; and

a light receiving surface at a rear surface side of a semiconductor substrate which is opposite to a multilayer wiring layer.

**2**. The solid-state imaging device according to claim **1**, wherein the semiconductor layer in the element isolation region has an opposite conductivity type to that of a charge storage region which forms the photoelectric conversion portion.

**3**. The solid-state imaging device according to claim **2**, wherein the semiconductor layer has a void therein.

**4**. The solid-state imaging device according to claim **3**, wherein the void is exposed to a rear surface of the semiconductor substrate.

**5**. The solid-state imaging device according to claim **4**, wherein the void exposed to the rear surface of the semiconductor substrate is filled with an insulating film.

**6**. The solid-state imaging device according to claim **4**, wherein the void exposed to the rear surface of the semiconductor substrate is filled with a light-shielding layer with an insulating film provided therebetween.

**7**. The solid-state imaging device according to claim **4**, wherein the void exposed to the rear surface of the semiconductor substrate is filled with a light-shielding layer.

**8**. The solid-state imaging device according to claim **5**, wherein the insulating film is a film having a negative fixed charge.

**9**. A method for manufacturing a solid-state imaging device comprising:

forming a trench having a predetermined depth from a surface of a semiconductor substrate;

filling a semiconductor layer in the trench by an epitaxial growth to form an element isolation region;

forming pixels in the semiconductor substrate, each of which has a photoelectric conversion portion and a plurality of pixel transistors, to form a pixel region in which the pixels isolated by the element isolation region are arranged in a two-dimensional matrix;

forming a multilayer wiring layer in which a plurality of layers of wires is arranged with at least one internal insulating film provided therebetween on the surface of the semiconductor substrate;

adhering a support substrate on the multilayer wiring layer; and

reducing the thickness of the semiconductor substrate so that the element isolation region is exposed to a rear surface of the semiconductor substrate and the rear surface thereof functions as a light-receiving surface.

**10**. The method for manufacturing a solid-state imaging device according to claim **9**, wherein the semiconductor layer in the element isolation region is formed of an opposite conductivity type to that of a charge storage region which forms the photoelectric conversion portion.

**11**. The method for manufacturing a solid-state imaging device according to claim **10**, wherein the semiconductor layer has a void therein.

**12**. The method for manufacturing a solid-state imaging device according to claim **11**, wherein the trench is formed deeper than the depth of an active layer in which the photoelectric conversion portion is formed, and when the thickness of the semiconductor substrate is reduced, the reduction in thickness is performed to a location of the active layer so as to expose the void to the rear surface of the semiconductor substrate.

**13**. The method for manufacturing a solid-state imaging device according to claim **12**, further comprising: after the thickness of the semiconductor substrate is reduced, filling an insulating film in the void.

**14**. The method for manufacturing a solid-state imaging device according to claim **12**, further comprising: after the thickness of the semiconductor substrate is reduced, filling a light-shielding layer in the void with an insulating film provided therebetween.

**15**. The method for manufacturing a solid-state imaging device according to claim **12**, further comprising: after the thickness of the semiconductor substrate is reduced, filling a light-shielding layer in the void.

**16**. The method for manufacturing a solid-state imaging device according to claim **13**, wherein the insulating film is formed using a film having a negative fixed charge.

**17**. The method for manufacturing a solid-state imaging device according to claim **9**, further comprising: performing annealing at a predetermined temperature immediately after the element isolation region is formed.

**18**. An electronic apparatus comprising:

a solid-state imaging device;

an optical system which guides incident light to a photoelectric conversion portion of the solid-state imaging device; and

a signal processing circuit which processes an output signal of the solid-state imaging device,

wherein the solid-state imaging device is the solid-state imaging device according to claim **1**.

* * * * *