US007675099B2

(12) **United States Patent**
Hwang et al.

(10) **Patent No.: US 7,675,099 B2**
(45) **Date of Patent: Mar. 9, 2010**

(54) **IMAGE SENSOR AND METHOD OF FORMING THE SAME**

(75) Inventors: **Sung-Ho Hwang**, Seoul (KR); **Duck-Hyung Lee**, Seongnam-si (KR); **Chang-Rok Moon**, Seoul (KR)

(73) Assignee: **Samsung Electronics Co., Ltd.** (KR)

(*) Notice: Subject to any disclaimer, the term of this patent is extended or adjusted under 35 U.S.C. 154(b) by 2 days.

(21) Appl. No.: **11/999,227**

(22) Filed: **Dec. 4, 2007**

(65) **Prior Publication Data**

US 2008/0128845 A1 Jun. 5, 2008

(30) **Foreign Application Priority Data**

Dec. 4, 2006 (KR) 10-2006-0121670

(51) **Int. Cl.**
H01L 31/113 (2006.01)

(52) **U.S. Cl.** **257/292**; 257/444; 257/460; 257/E33.072; 250/200; 359/619; 348/308

(58) **Field of Classification Search** 257/460, 257/292, 444, E33.072; 359/619; 348/308; 250/200

See application file for complete search history.

(56) **References Cited**

U.S. PATENT DOCUMENTS

5,598,016 A * 1/1997 Tanabe et al. 257/229
6,821,809 B2 11/2004 Abe et al.
7,208,742 B1 * 4/2007 Zelakiewicz et al. ... 250/370.11
7,238,562 B2 7/2007 Jang
2005/0056902 A1 * 3/2005 Abe et al. 257/428
2006/0003519 A1 1/2006 Jang
2006/0146233 A1 7/2006 Park
2007/0153860 A1 * 7/2007 Chang-Hasnain et al. 372/50.124
2007/0165203 A1 * 7/2007 Bleeker 355/67
2007/0194401 A1 * 8/2007 Nagai et al. 257/447

FOREIGN PATENT DOCUMENTS

JP	3-276677		12/1991
JP	7-170366		7/1995
JP	2003-142671		5/2003
JP	2006-80457		3/2006
JP	200680457	*	3/2006
JP	2006080457	*	3/2006
KR	2000-0003491		1/2000
KR	10-2006-0002260		1/2006
KR	10-2006-0077173		7/2006

OTHER PUBLICATIONS

Palik, Edward D. , Handbook of Optical Constants of Solids , 1998, Elsevier, (pp. 399, 729).*

* cited by examiner

Primary Examiner—Davienne Monbleau
Assistant Examiner—Hajar Kolahdouzan
(74) *Attorney, Agent, or Firm*—Mills & Onello, LLP

(57) **ABSTRACT**

Provided are an image sensor and a method of forming the image sensor. The image sensor has a base multi-layered reflection layer interposed between a photodiode and an interlayer insulating layer. The photodiode has a first surface adjacent to the interlayer insulating layer and a second surface opposite the first surface. Here, external light is incident on the second surface of the photodiode. Also, the image sensor includes a sidewall multi-layered reflection layer that encloses the photodiode.

3 Claims, 17 Drawing Sheets

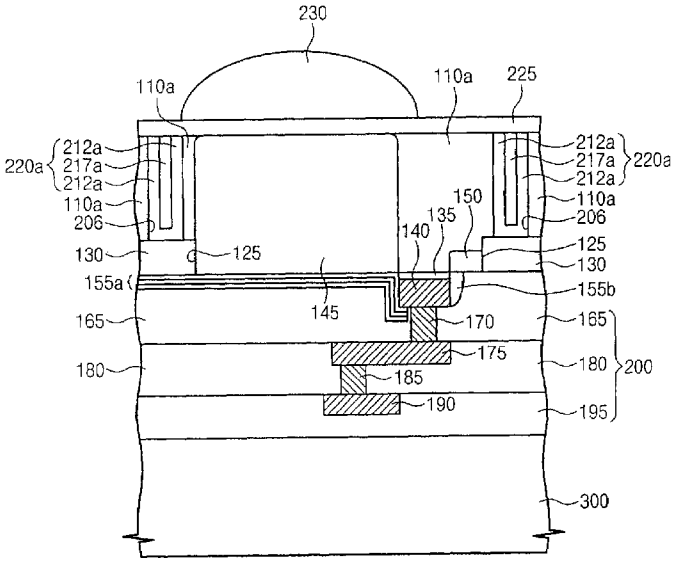

Fig. 1

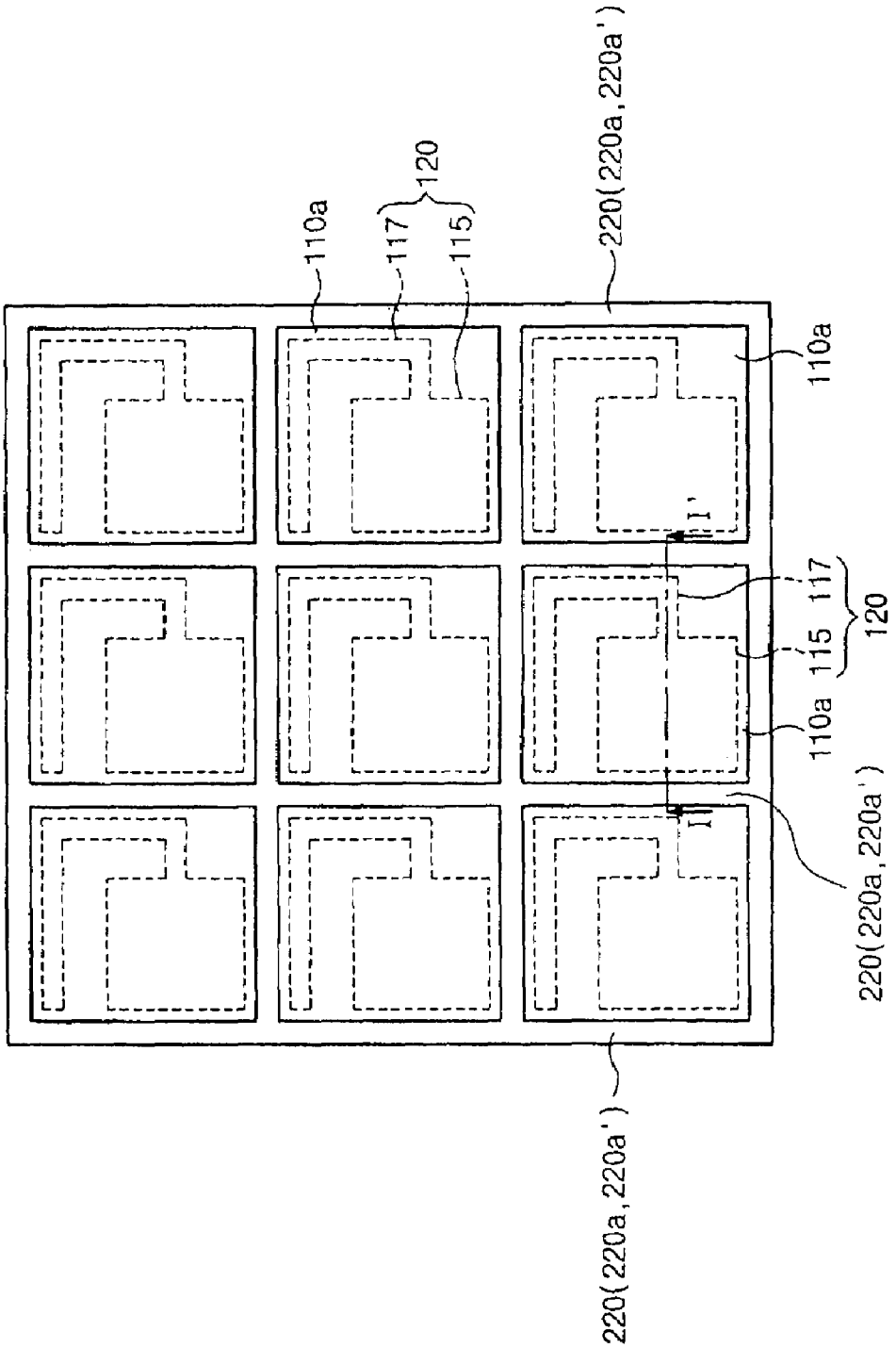
110a
117
115
120
220(220a, 220a')
110a
I'
117
115
120
110a
I
220(220a, 220a')
220(220a, 220a')

Fig. 2

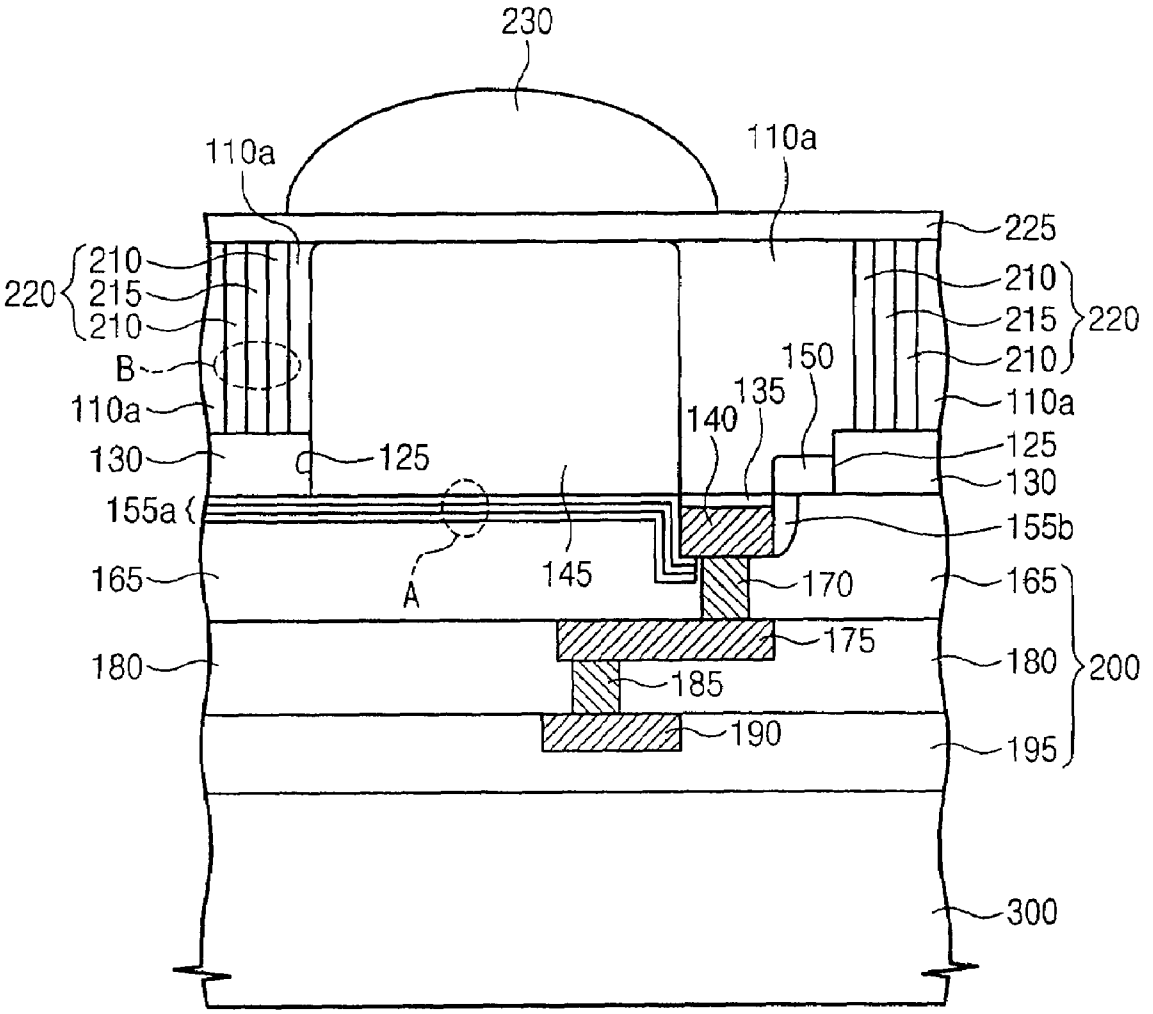
230
110a
110a
225
220
210
215
210
B
110a
130
125
155a
165
A
145
140
135
150
210
215
210
220
110a
125
130
155b
170
165
175
180
185
180
200
190
195
300

Fig. 3

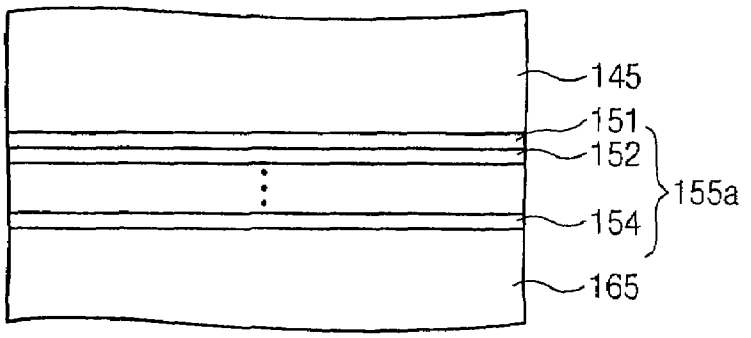

Fig. 4

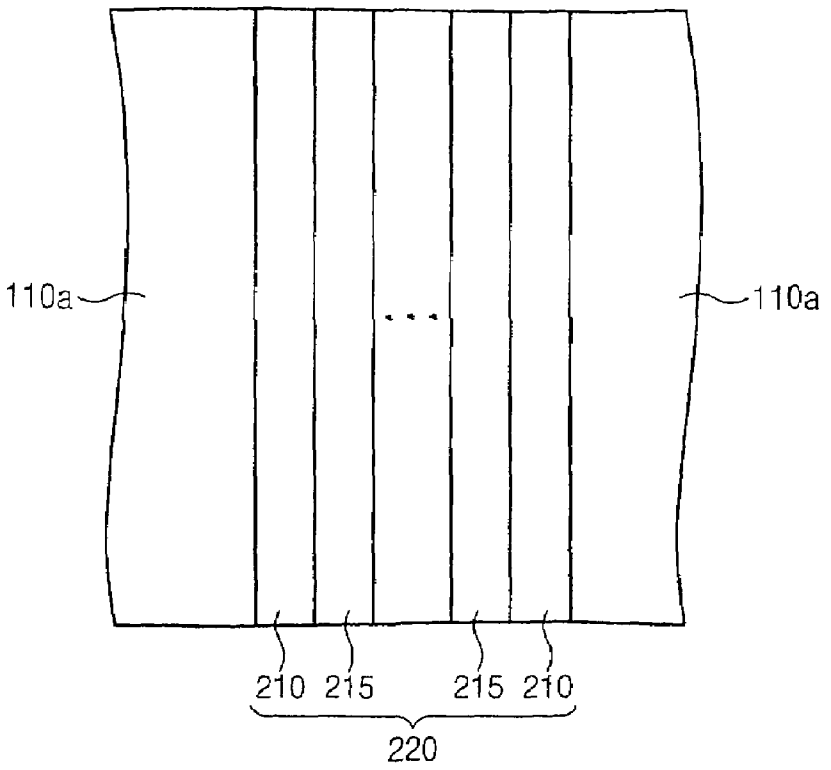

Fig. 5

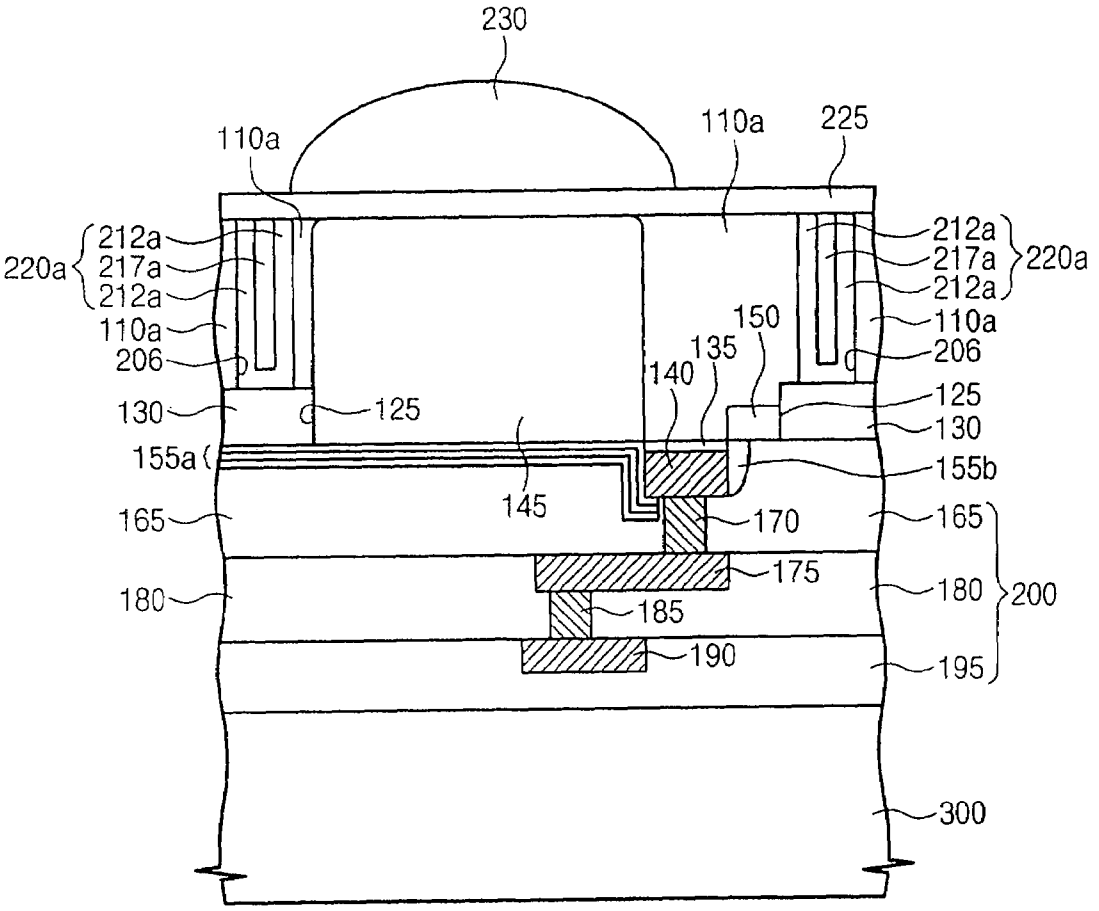
230
110a
110a
225
212a
217a
212a
220a
212a
217a
212a
220a
110a
110a
206
206
150
135
140
130
125
125
130
155a
155b
145
165
170
165
175
180
185
180
200
190
195
300

Fig. 6

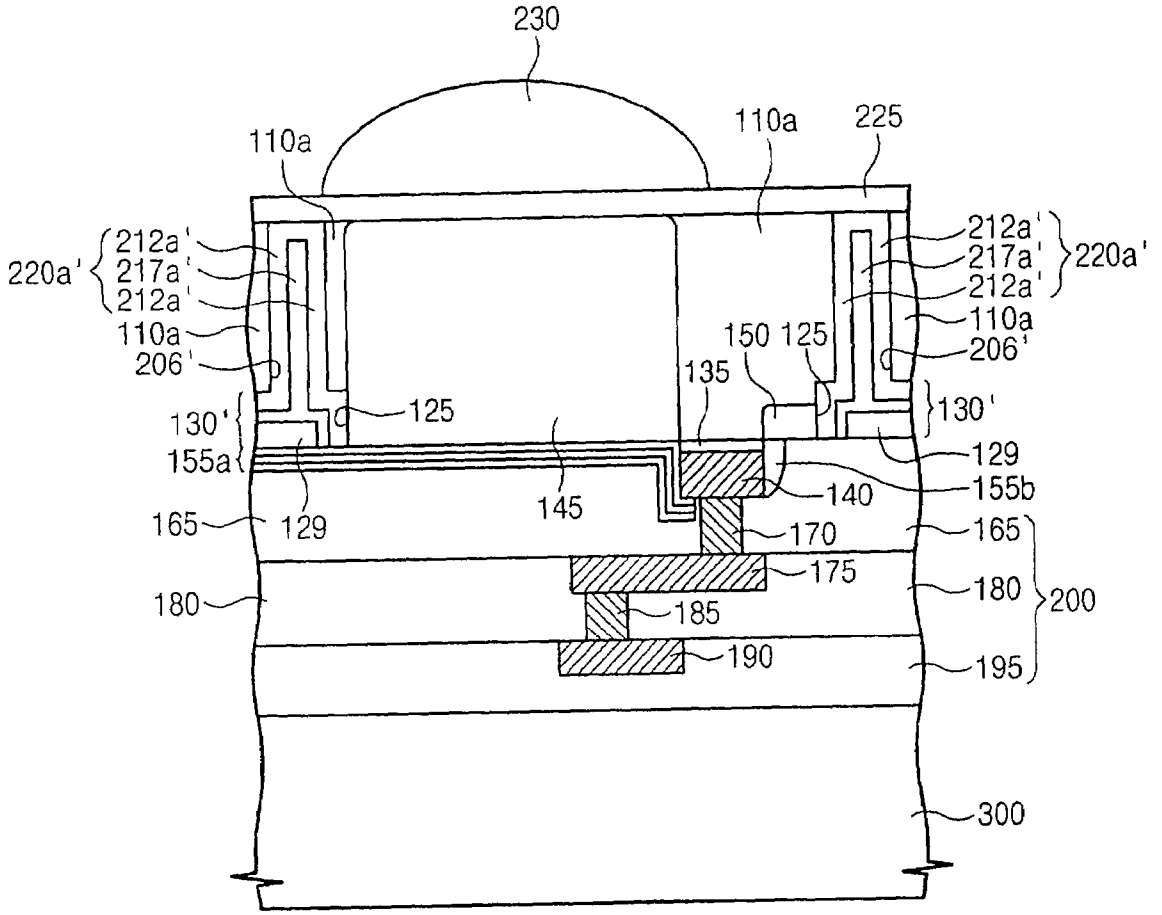
230
110a
110a
225
220a'
212a'
217a'
212a'
110a
206'
130'
155a
125
129
145
165
180
150
125
135
140
155b
170
175
185
190
195
200
300

Fig. 7

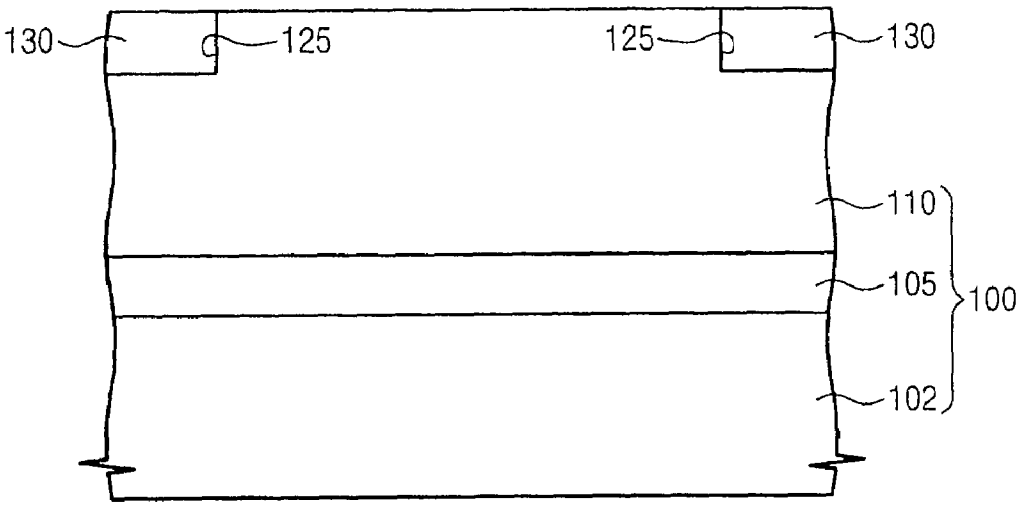
130
125
125
130
110
105
100
102

Fig. 8

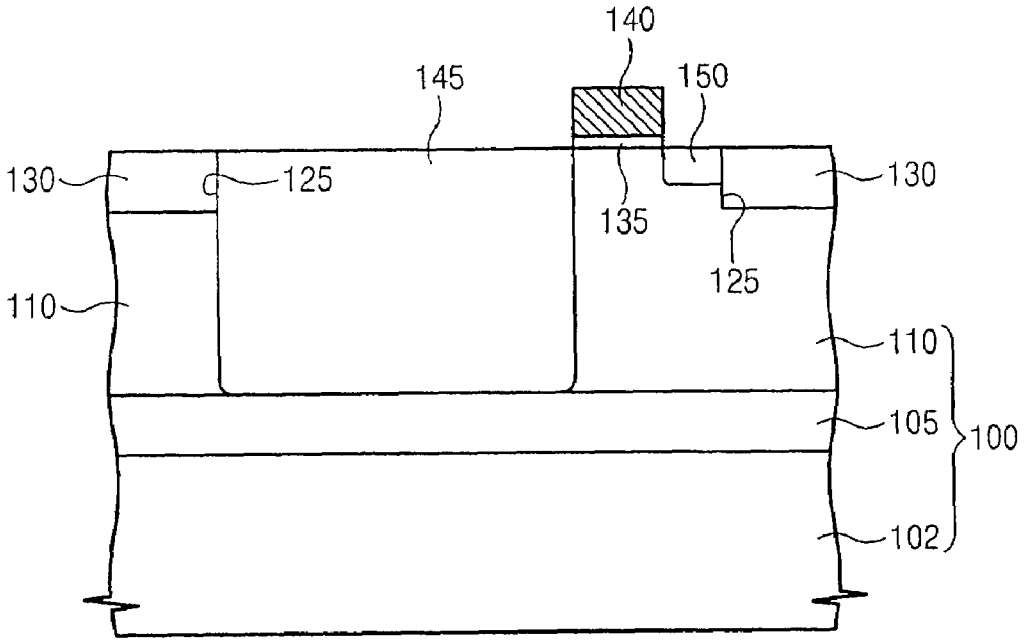
140
145
150
130
125
135
125
130
110
110
105
100
102

Fig. 9

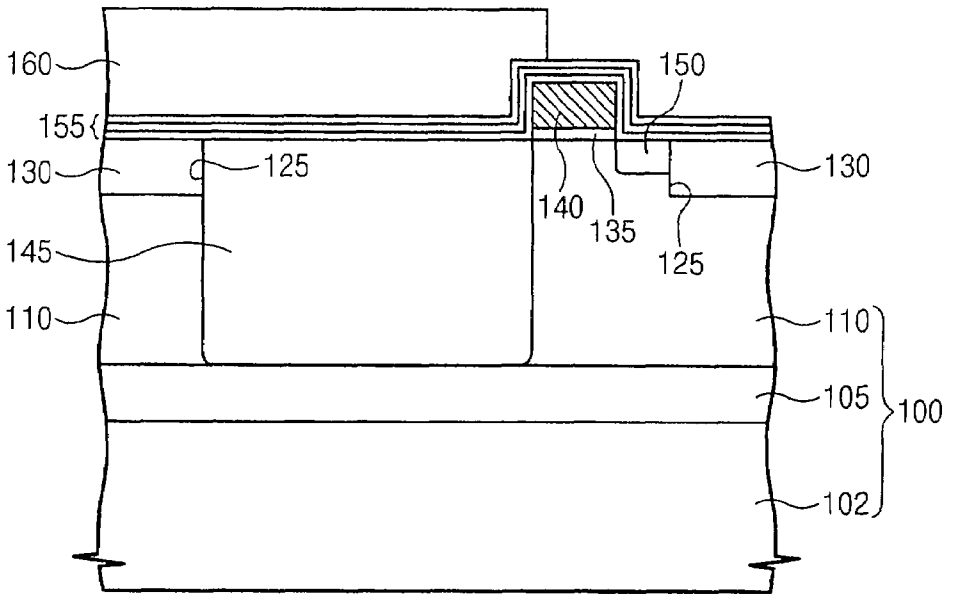
160
150
155
130
125
130
140
135
125
145
110
110
105
100
102

Fig. 10

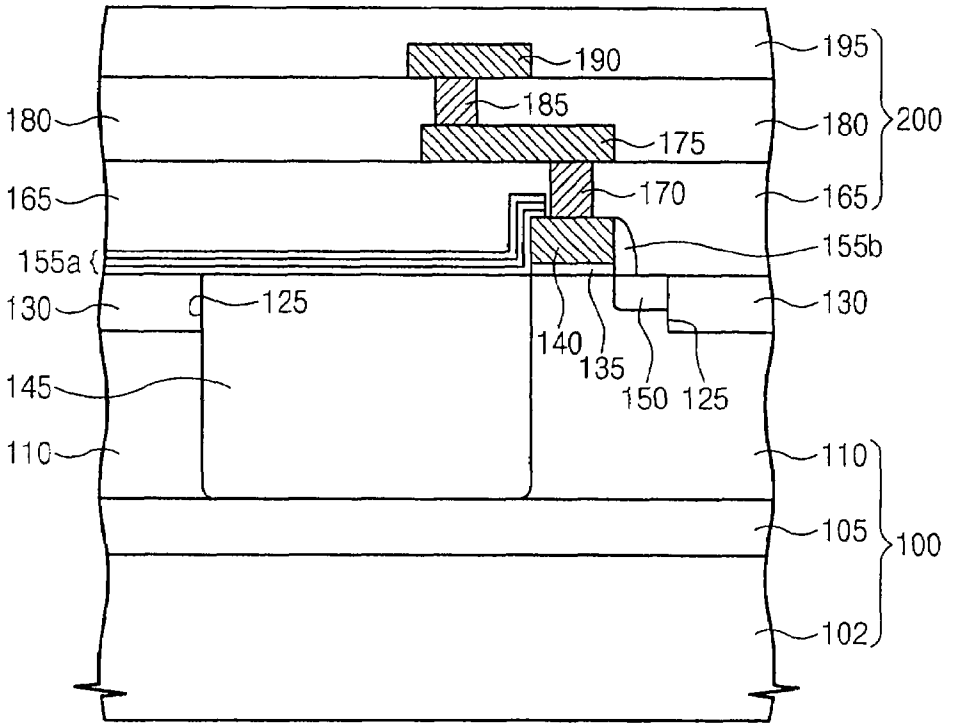
190
195
185
180
175
180
200
165
170
165
155a
155b
130
125
130
140
135
150
125
145
110
110
105
100
102

Fig. 11

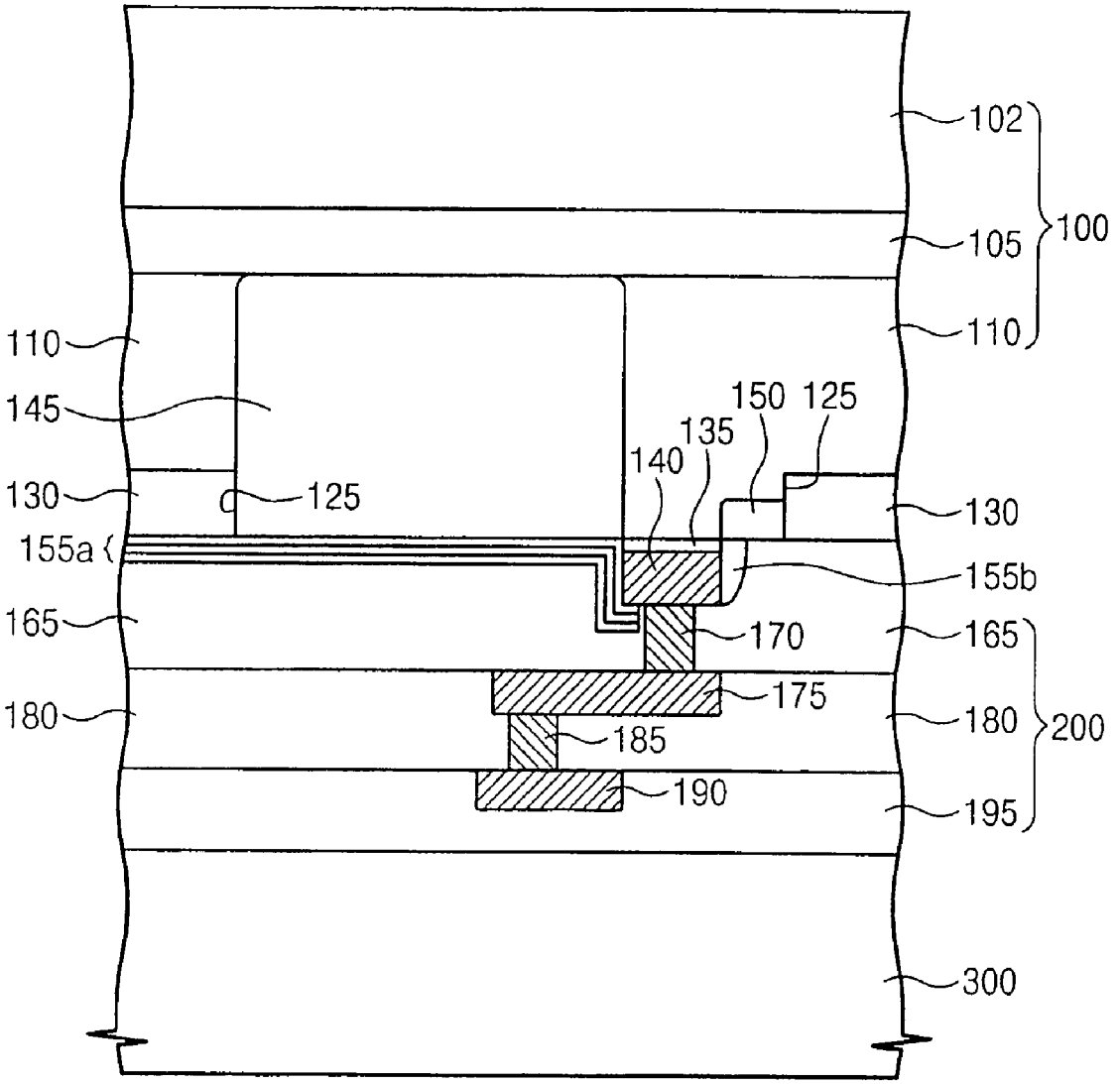
102
105
100
110
110
145
150
125
135
140
130
125
130
155a
155b
165
170
165
175
180
180
200
185
190
195
300

Fig. 12

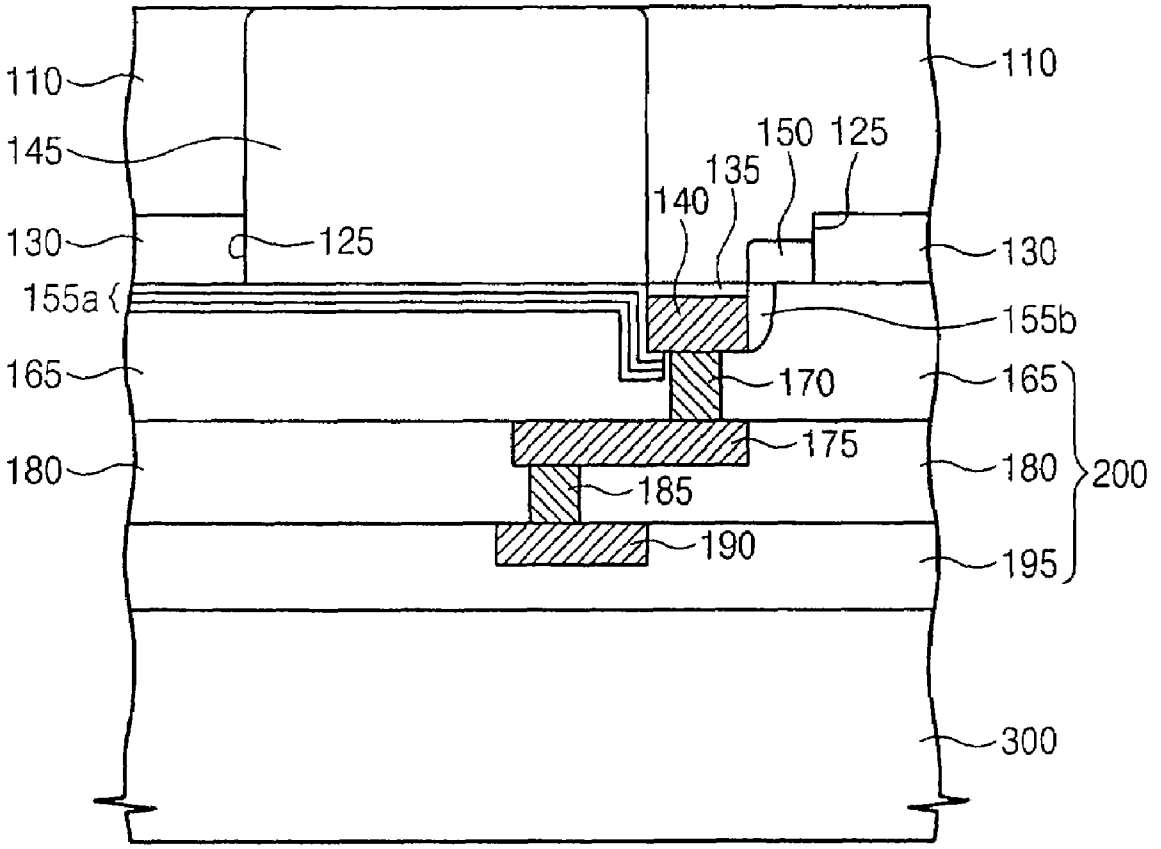
110
145
130
125
155a
165
180
110
150
125
135
140
130
155b
170
165
175
180
200
185
190
195
300

Fig. 13

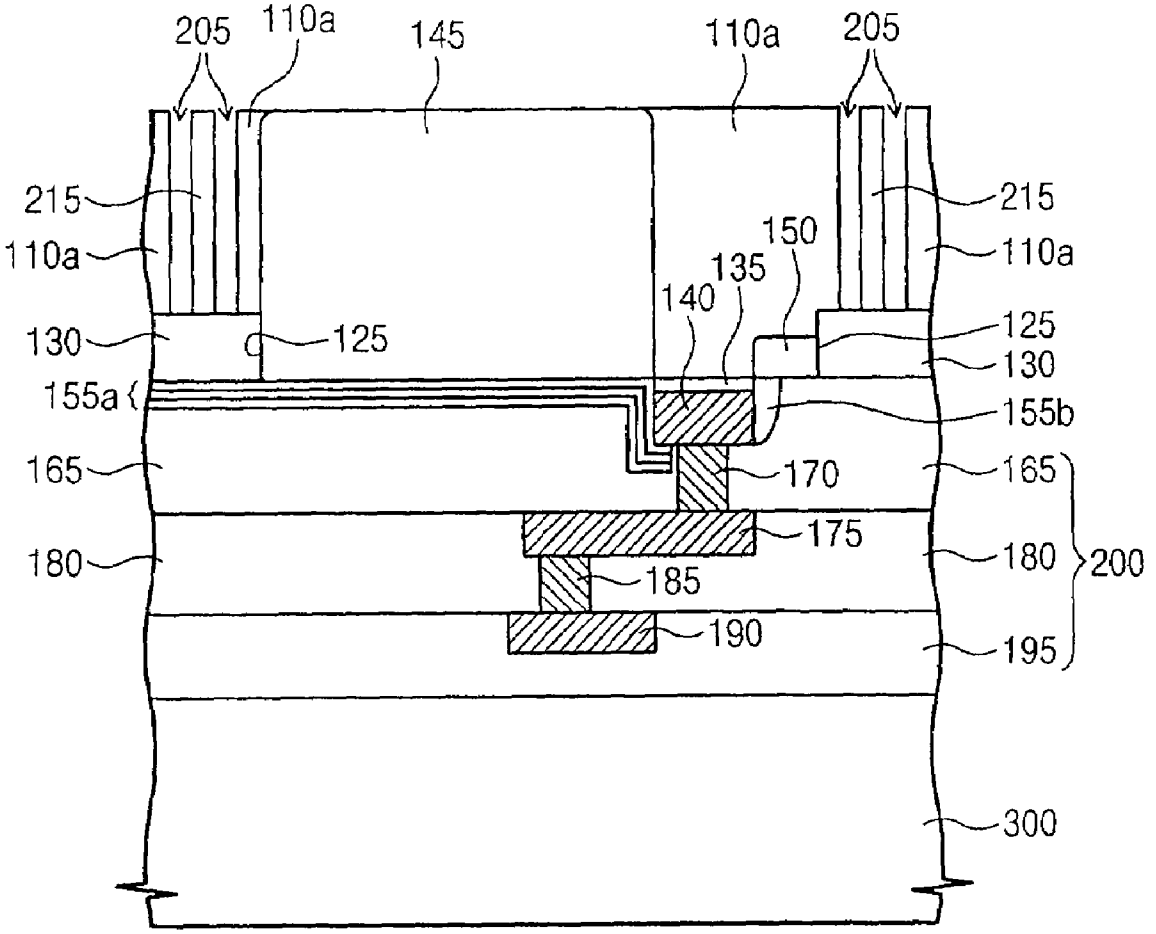
205
110a
145
110a
205
215
110a
150
135
140
215
110a
130
125
125
130
155a
155b
165
170
165
175
180
185
180
200
190
195
300

Fig. 14

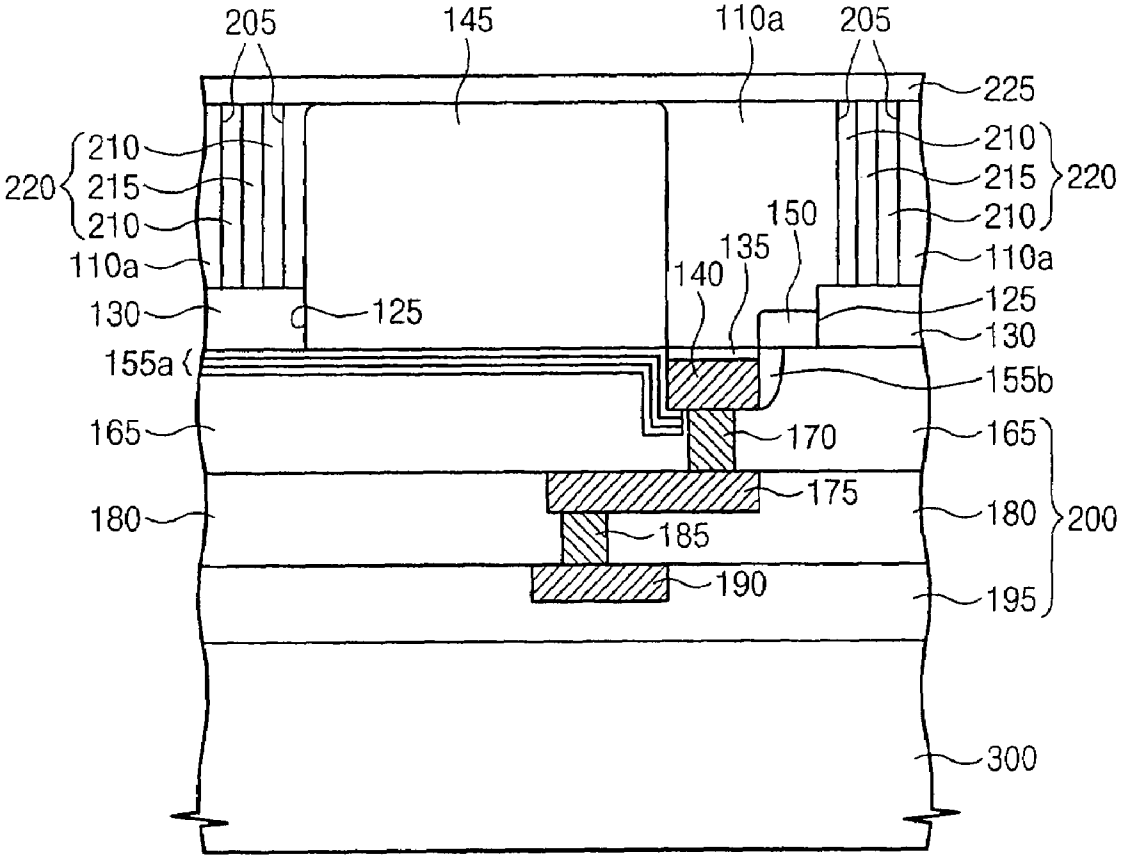
205
145
110a
205
225
210
220
215
210
210
215
220
210
150
135
110a
110a
140
125
130
125
130
155a
155b
165
170
165
175
180
180
200
185
190
195
300

Fig. 15

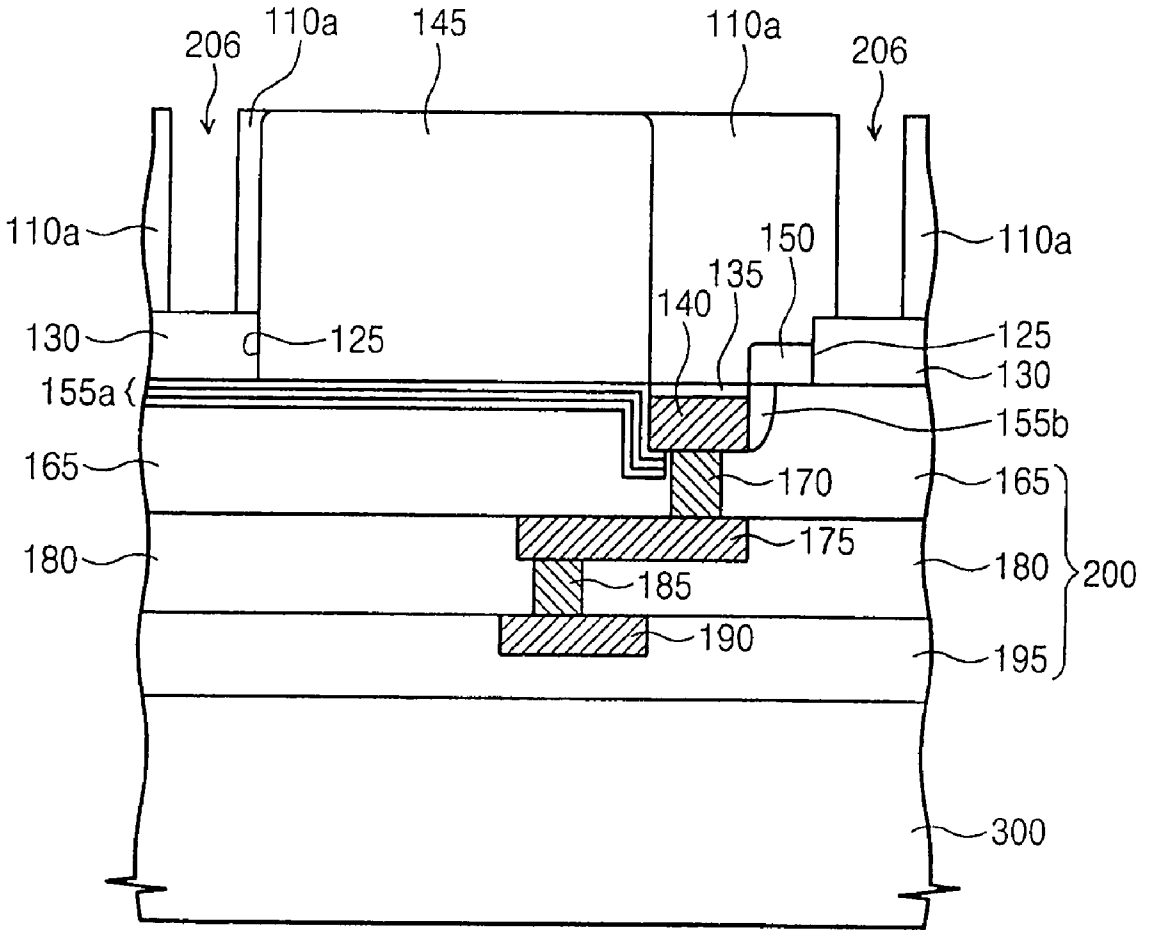
206
110a
145
110a
206
110a
110a
150
135
140
130
125
125
130
155a
155b
165
170
165
180
175
180
200
185
190
195
300

Fig. 16

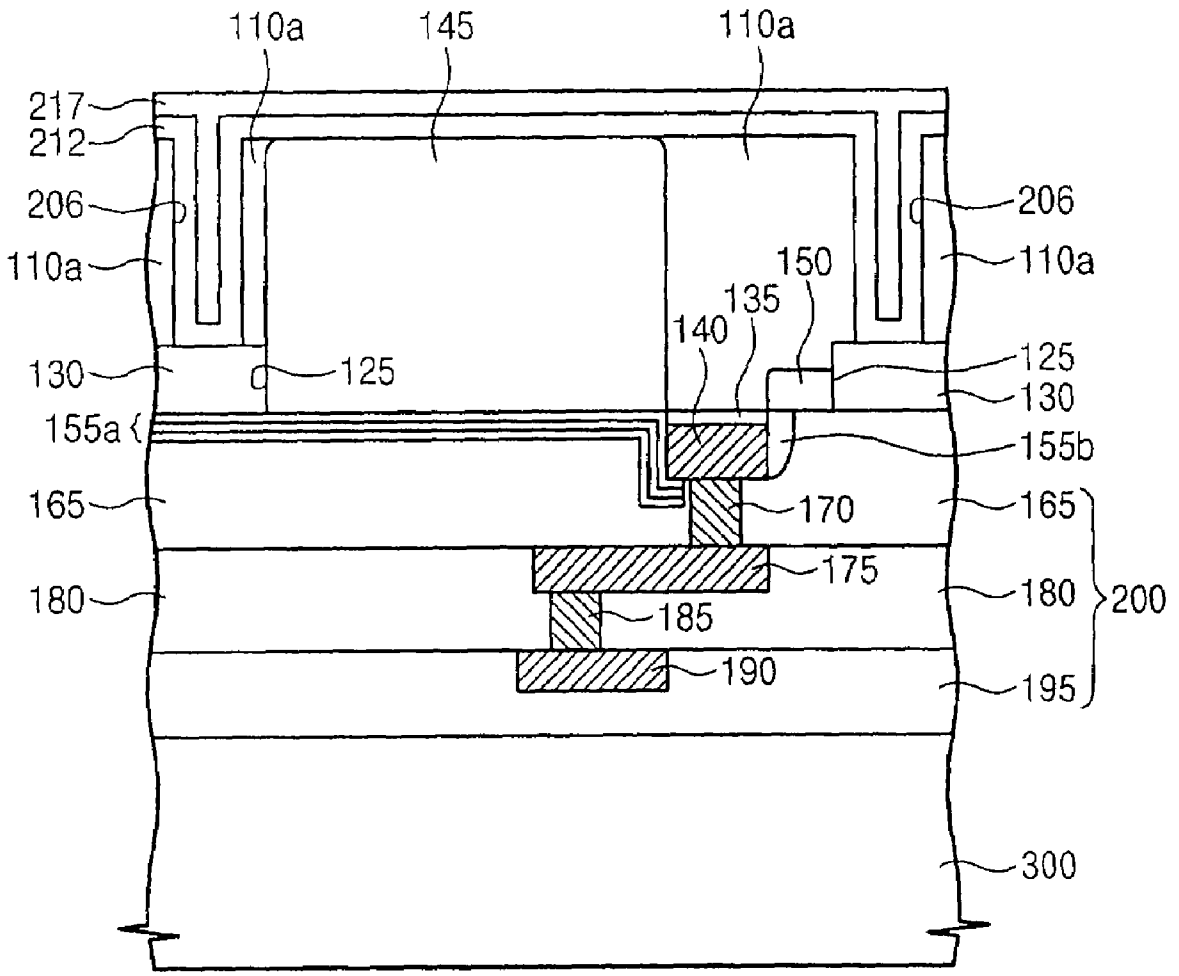
110a
145
110a
217
212
206
206
110a
110a
150
135
140
130
125
125
130
155a
155b
165
170
165
175
180
180
200
185
190
195
300

Fig. 17

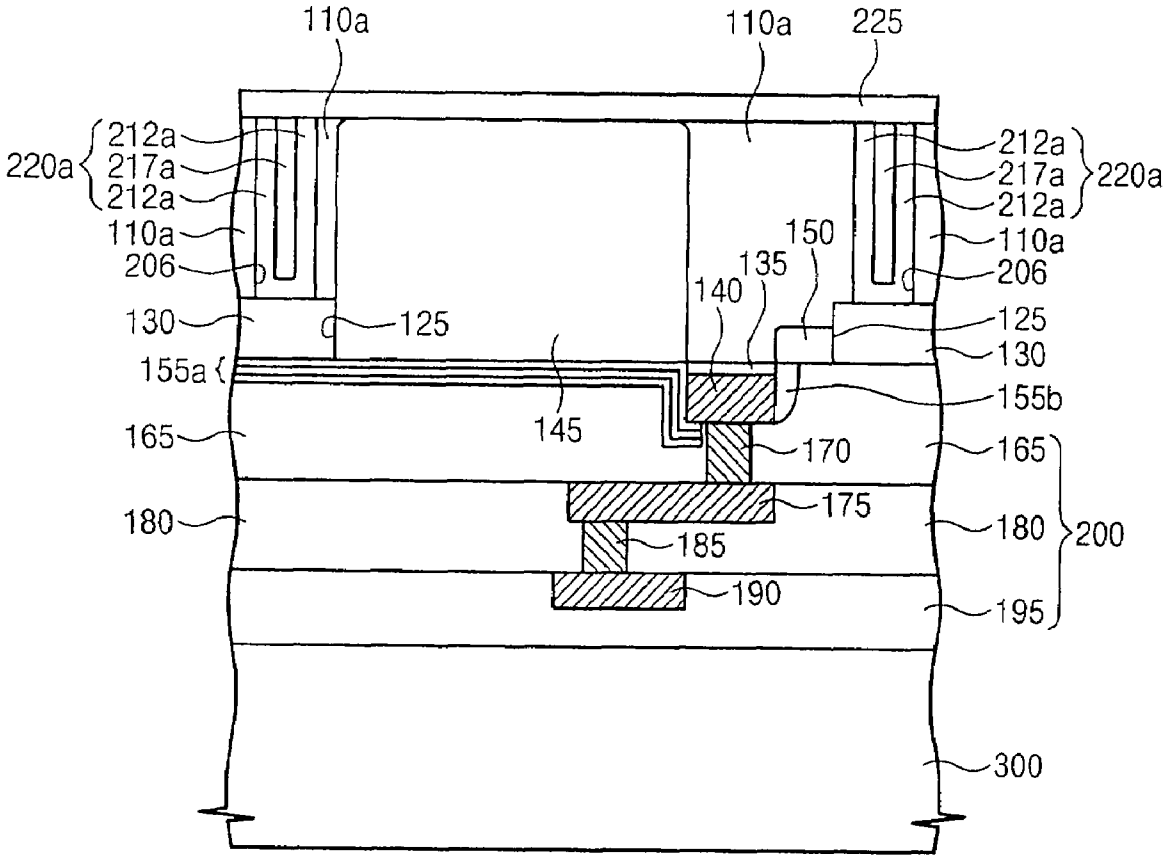
110a
110a
225
220a
212a
217a
212a
110a
206
130
125
155a
145
165
180
212a
217a
212a
220a
150
135
140
110a
206
125
130
155b
165
170
175
180
185
190
195
200
300

Fig. 18

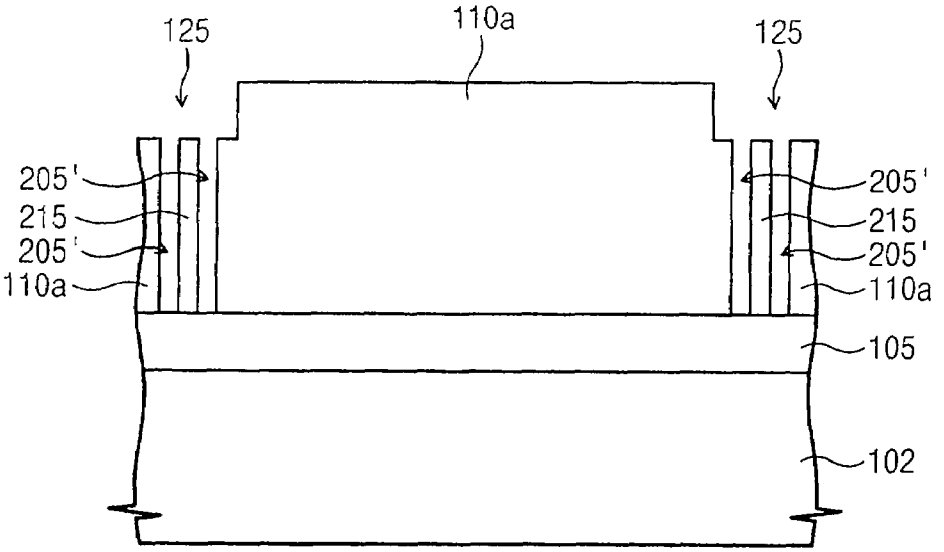
125
110a
125
205'
215
205'
110a
205'
215
205'
110a
105
102

Fig. 19

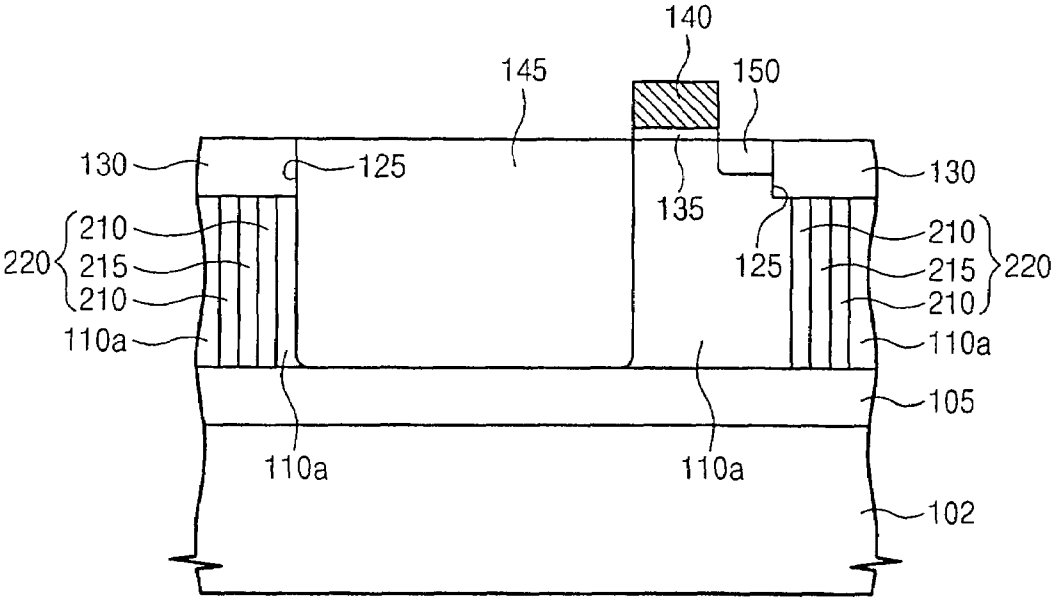
140
145
150
130
125
130
135
210
220
215
210
125
210
215
220
210
110a
110a
105
110a
110a
102

Fig. 20

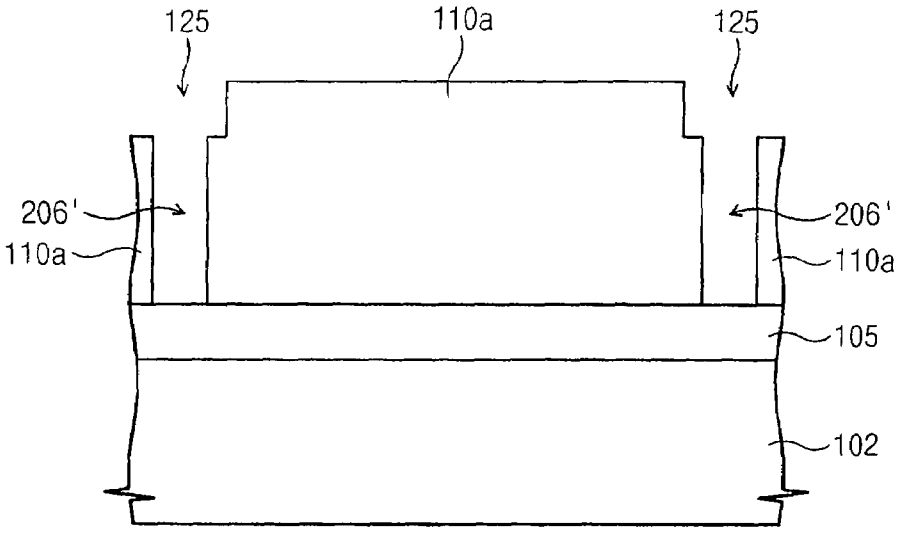
125
110a
125
206'
110a
206'
110a
105
102

Fig. 21

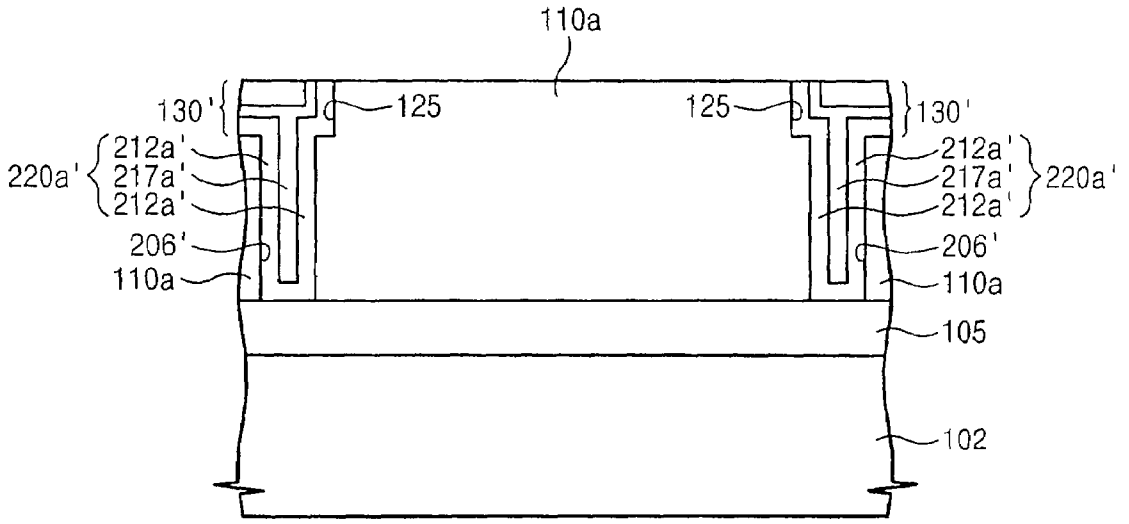
110a
130'
125
125
130'
220a'
212a'
217a'
212a'
212a'
217a'
212a'
220a'
206'
110a
206'
110a
105
102

Fig. 22

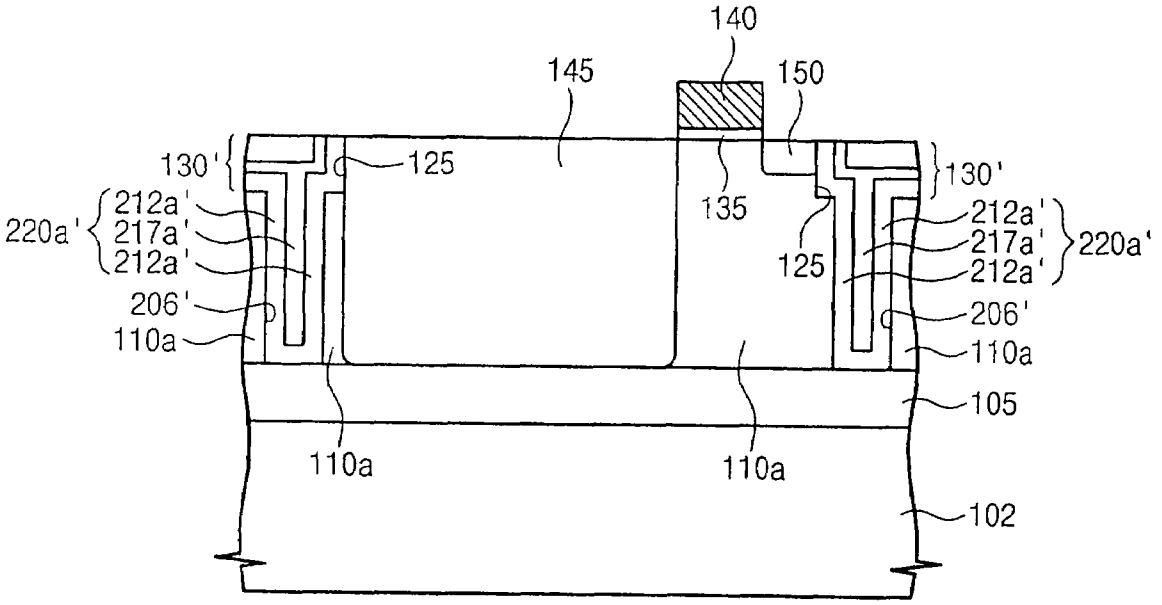
140
145
150
130'
125
135
130'
212a'
217a'
212a'
220a'
212a'
217a'
212a'
220a'
125
206'
206'
110a
110a
105
110a
110a
102

IMAGE SENSOR AND METHOD OF FORMING THE SAME

CROSS-REFERENCE TO RELATED APPLICATIONS

This U.S. non-provisional patent application claims priority under 35 U.S.C. §119 to Korean Patent Application No. 10-2006-0121670, filed on Dec. 4, 2006, the entire contents of which are hereby incorporated by reference.

FIELD OF THE INVENTION

The present invention disclosed herein relates to a semiconductor device and a method of forming the same, and more particularly, to an image sensor that converts incident light to electrical signals and to a method of forming the image sensor.

BACKGROUND

An image sensor of a semiconductor device is a device that converts an optical image to electrical signals. The image sensor has a light receiver that receives light from the outside and converts it to electrical signals. A photodiode is a representative type of light receiver. When external light is incident on a depletion region in the photodiode, electron-hole pairs are generated, and the external light is converted to electrical signals.

Spectral sensitivity is one of crucial characteristics of an image sensor. The higher the percentage of incident light absorbed by the photodiode, the higher the spectral sensitivity. An increase in the spectral sensitivity leads to an increase in light sensitivity of the image sensor to external light, giving the image sensor favorable properties. However, there are many factors that can reduce the spectral sensitivity of the image sensor, such as the configuration of the image sensor, the wavelengths of incident light, etc. For example, many specific elements of an image sensor, such as its lines, can prevent light from being freely incident. Also, the amount of light absorbed by the photodiode can be reduced according to the wavelength of the light. For example, with a longer wavelength, light penetration through the photodiode increases. Thus, regions of light with a long wavelength (in the red spectrum, for example) are likely not to be absorbed completely by the photodiode, thus reducing the spectral sensitivity.

SUMMARY OF THE INVENTION

In accordance with aspects of the present invention, there is provided an image sensor with an increased spectral sensitivity.

In accordance with aspects of the present invention also provided is an image sensor capable of minimizing interference between neighboring pixels, and to a method of forming the image sensor.

In accordance with one aspect of the present invention provided is an image sensors including: a pixel semiconductor pattern disposed on a substrate; an interlayer insulating layer interposed between the pixel semiconductor pattern and the substrate; a photodiode in the pixel semiconductor pattern; a base multi-layered reflection layer interposed between the photodiode and the interlayer insulating layer; and a sidewall multi-layered reflection layer disposed on a sidewall of the pixel semiconductor pattern.

The sidewall multi-layered reflection layer can include a plurality of layers having different refractive indexes with respect to each other. One layer of the sidewall multi-layered reflection layer that contacts the sidewall of the pixel semiconductor pattern can have a refractive index different from a refractive index of the pixel semiconductor pattern.

The sidewall multi-layered reflection layer can include a first sidewall reflection layer and a second sidewall reflection layer that are stacked on the sidewall of the pixel semiconductor pattern. The first sidewall reflection layer can have a refractive index that is lower than refractive indexes of the second sidewall reflection layer and the pixel semiconductor pattern, and a layer of the sidewall multi-layered reflection layer contacting the pixel semiconductor pattern can be the first sidewall reflection layer.

The first sidewall reflection layer and the second sidewall reflection layer of the sidewall multi-layered reflection layer can be alternatingly stacked a plurality of times on the sidewall of the pixel semiconductor pattern.

The first sidewall reflection layer can be one of a silicon oxide layer and a layer of air, and the second sidewall reflection layer can be formed of silicon.

The layers of the sidewall multi-layered reflection layer can have thicknesses chosen based on the sidewall of the pixel semiconductor pattern, and for inducing constructive interference of light reflected by at least one boundary in the sidewall multi-layered reflection layer and a boundary between the sidewall multi-layered reflection layer and the pixel semiconductor pattern.

A plurality of the pixel semiconductor pattern can be provided in a two-dimensional layout of columns and rows on the substrate. Here, the sidewall multi-layered reflection layer can be disposed between a pair of adjacent pixel semiconductor patterns, and layers of sidewall multi-layered reflection layer that contact the pair of adjacent pixel semiconductor patterns can be first reflection layers.

The base multi-layered reflection layer can include a plurality of layers with different refractive indexes relative to each other. A refractive index of a layer of the base multi-layered reflection layer that contacts the pixel semiconductor pattern can be different from a refractive index of the pixel semiconductor pattern.

The base multi-layered reflection layer can further include a first base reflection layer and a second base reflection layer that are stacked. Here, the first base reflection layer can have a refractive index that is lower than refractive indexes of the second base reflection layer and the pixel semiconductor pattern. A layer of the base multi-layered reflection layer that contacts the pixel semiconductor pattern can be the first base reflection layer. The first and second base reflection layers can be alternatingly stacked at least once.

The layers of the base multi-layered reflection layer can have thicknesses that induce constructive interference of light reflected by at least one boundary of the base multi-layered reflection layer and a boundary between the base multi-layered reflection layer and the pixel semiconductor pattern.

The image sensor can further include: a color filter covering the pixel semiconductor pattern; and a micro lens disposed on the color filter and covering the photodiode, wherein the pixel semiconductor pattern is disposed between the color filter and the substrate.

In accordance with another aspect of the invention, provided is an image sensor comprising: a pixel semiconductor pattern disposed on a substrate; an interlayer insulating layer interposed between the pixel semiconductor pattern and the substrate; a photodiode in the pixel semiconductor pattern; a base multi-layered reflection layer interposed between the

photodiode and the interlayer insulating layer; and a sidewall multi-layered reflection layer disposed on a sidewall of the pixel semiconductor pattern. The sidewall multi-layered reflection layer includes a plurality of layers having different refractive indexes with respect to each other, wherein one layer of the sidewall multi-layered reflection layer that contacts the sidewall of the pixel semiconductor pattern has a refractive index different from a refractive index of the pixel semiconductor pattern. The image sensor further includes: a color filter covering the pixel semiconductor pattern; and a micro lens disposed on the color filter and covering the photodiode, wherein the pixel semiconductor pattern is disposed between the color filter and the substrate.

The base multi-layered reflection layer can include a plurality of layers with different refractive indexes relative to each other, and a refractive index of a layer of the base multi-layered reflection layer that contacts the pixel semiconductor pattern is different from a refractive index of the pixel semiconductor pattern.

A plurality of the pixel semiconductor pattern can be provided in a two-dimensional layout of columns and rows on the substrate. Here, the sidewall multi-layered reflection layer can be disposed between a pair of adjacent pixel semiconductor patterns, and layers of sidewall multi-layered reflection layer that contact the pair of adjacent pixel semiconductor patterns can be first reflection layers.

In accordance with another aspect of the present invention, provide is a method for forming an image sensor, including: forming a photodiode in a semiconductor layer included in a first substrate; forming a base multi-layered reflection layer covering the photodiode; forming an interlayer insulating layer covering the semiconductor layer, with the base multi-layered reflection layer interposed therebetween; bonding the interlayer insulating layer and a second substrate; removing the first substrate with the exception of the semiconductor layer; and forming a sidewall multi-layered reflection layer in the semiconductor layer to define a pixel semiconductor pattern containing the photodiode. The pixel semiconductor pattern is a portion of the semiconductor layer enclosed by the sidewall multi-layered reflection layer.

The sidewall multi-layered reflection layer can include a plurality of layers having different refractive indexes with respect to each other, and a layer contacting a sidewall of the pixel semiconductor pattern within the sidewall multi-layered reflection layer can have a refractive index different from a refractive index of the pixel semiconductor pattern.

Thicknesses of the layers in the sidewall multi-layered reflection layer can be controlled based on the sidewall of the pixel semiconductor pattern, for inducing constructive interference of light reflected by at least one boundary in the sidewall multi-layered reflection layer and a boundary between the sidewall multi-layered reflection layer and the pixel semiconductor pattern.

Forming the sidewall multi-layered reflection layer can be performed after the first substrate, with the exception of the semiconductor layer, is removed.

The forming of the sidewall multi-layered reflection layer can be performed before the forming of the base multi-layered reflection layer.

The forming of the sidewall multi-layered reflection layer can include forming a plurality of grooves for defining the pixel semiconductor pattern through selectively etching the semiconductor layer. Here, the grooves can surround the pixel semiconductor pattern in layers, and a material filling the grooves and a portion of the semiconductor layer between the grooves can be included in the sidewall multi-layered reflection layer.

The material filling the grooves can have a lower refractive index than the semiconductor layer.

The material filling the grooves can be one of silicon oxide and air.

The forming of the sidewall multi-layered reflection layer can include: forming a groove defining the pixel semiconductor pattern by selectively etching the semiconductor layer; forming a first sidewall reflection layer to be conformal with inner sidewalls and a floor of the groove; and forming a second sidewall reflection layer within the groove and on the first sidewall reflection layer.

The second sidewall reflection layer can be formed to be conformal within the groove on the first sidewall reflection layer. In this case, the first and second sidewall reflection layers can be alternatingly formed a plurality of times.

The first sidewall reflection layer can have a refractive index lower than refractive indexes of the second sidewall reflection layer and the semiconductor layer. Here, the first sidewall reflection layer can contact a sidewall of the pixel semiconductor pattern.

The base multi-layered reflection layer can include a plurality of layers having different refractive indexes with respect to each other. A refractive index of a layer contacting the pixel semiconductor pattern within the base multi-layered reflection layer can be different from a refractive index of the pixel semiconductor pattern.

The base multi-layered reflection layer can include a first base reflection layer and a second base reflection layer stacked in sequence on the photodiode disposed on the first substrate. The first base multi-layered reflection layer can have a refractive index lower than refractive indexes of the second base reflection layer and the pixel semiconductor pattern. A layer of the base multi-layered reflection layer contacting the pixel semiconductor pattern can be the first base reflection layer. In this case, the first and second base reflection layers can be alternately formed at least once.

The layers of the base multi-layered reflection layer can be controlled in thickness, for inducing constructive interference of light reflected by at least one boundary in the base multi-layered reflection layer and a boundary between the base multi-layered reflection layer and the pixel semiconductor pattern.

After the removing of the first substrate, with the exception of the semiconductor layer, the method can further include: forming a color filter covering the photodiode; and forming a micro lens on the color filter. The pixel semiconductor pattern can be disposed between the color filter and the interlayer insulating layer bonded to the second substrate.

BRIEF DESCRIPTION OF THE FIGURES

The present invention will become more apparent in view of the attached drawings and accompanying detailed description. The embodiments depicted therein are provided by way of example, not by way of limitation, wherein like reference numerals refer to the same or similar elements. The drawings are not necessarily to scale, emphasis instead being placed upon illustrating aspects of the invention. In the figures:

FIG. **1** is a plan view of an image sensor according to aspects of the present invention;

FIG. **2** is a sectional view of FIG. **1** taken along line I-I' for describing an embodiment of an image sensor according to aspects of the present invention;

FIG. **3** is an enlarged view of section A in FIG. **2** for describing an embodiment of a base multi-layered reflection layer included in an image sensor according to aspects of the present invention.

FIG. **4** is an enlarged view of section B in FIG. **2** for describing an embodiment of a sidewall multi-layered reflection layer included in an image sensor according to aspects of the present invention;

FIG. **5** is a sectional view of FIG. **1** taken along line I-I' for illustrating another embodiment of an image sensor according to aspects of the present invention;

FIG. **6** is a sectional view of FIG. **1** taken along line I-I' for describing an alternate embodiment of an image sensor according to aspects of the present invention;

FIGS. **7** through **14** are sectional views showing an embodiment of a method of forming an image sensor according to aspects of the present invention;

FIGS. **15** through **17** are sectional views showing an alternate embodiment of a method of forming an image sensor according to aspects of the present invention;

FIGS. **18** and **19** are sectional views for describing an alternate embodiment of a method for forming an image sensor according to aspects of the present invention; and

FIGS. **20** through **22** are sectional views for describing another alternate embodiment of a method of forming an image sensor according to aspects of the present invention.

DETAILED DESCRIPTION OF PREFERRED EMBODIMENTS

Embodiments demonstrating various aspects of the present invention will be described below in more detail with reference to the accompanying drawings. The present invention can, however, be embodied in different forms and should not be constructed as limited to the embodiments set forth herein.

In the figures, the dimensions of layers and regions are exaggerated for clarity of illustration. It will also be understood that when a layer (or film) is referred to as being 'on' another layer or substrate, it can be directly on the other layer or substrate, or intervening layers can also be present. Further, it will be understood that when a layer is referred to as being 'under' another layer, it can be directly under, and one or more intervening layers can also be present. In addition, it will also be understood that when a layer is referred to as being 'between' two layers, it can be the only layer between the two layers, or one or more intervening layers can also be present. Like reference numerals refer to like elements throughout.

Hereinafter, an exemplary embodiment in accordance with aspects of the present invention will be described with reference to the accompanying drawings.

FIG. **1** is a plan view of an image sensor according to aspects of the present invention, and FIG. **2** is a sectional view of FIG. **1** taken along line I-I' for describing an embodiment of an image sensor according to aspects of the present invention.

Referring to FIGS. **1** and **2**, a plurality of pixel semiconductor patterns **110***a* can be arranged two-dimensionally in rows and columns on a substrate **300**. The pixel semiconductor patterns **110***a* are formed as a semiconductor. In particular, the pixel semiconductor patterns **110***a* can be formed of silicon. Each pixel semiconductor pattern **110***a* has a photodiode **145** disposed therein. The pixel semiconductor patterns **110***a* are doped with a first conductive dopant. The photodiodes **145** are regions doped with a second conductive dopant. That is, a photodiode **145** is a region doped with the second conductive dopant within a predetermined region of a pixel semiconductor pattern **110***a*. The first conductive dopant can be a P-type dopant, and the second conductive dopant can be an N-type dopant. Conversely, the first conductive dopant can be an N-type dopant, and the second conductive dopant may be a P-type dopant. However, in embodiments herein, descriptions are given of the first conductive dopant being a P-type dopant and the second conductive dopant being an N-type dopant. Therefore, the photodiodes **145** form a PN junction with the pixel semiconductor pattern **110***a*. The photodiodes **145** are doped at a low concentration, so that most or the entirety of the photodiodes **145** become depletion regions.

A sidewall multi-layered reflection layer **220** is provided between the side walls of the pixel semiconductor patterns **110***a*. The sidewall multi-layered reflection layer **220** includes a plurality of layers sequentially stacked at the side walls of the pixel semiconductor patterns **110***a*. Here, the sidewall multi-layered reflection layer **220** includes layers with different respective refractive indexes. A detailed description of the sidewall multi-layered reflection layer **220** will be provided below. The sidewall multi-layered reflection layer **220** encloses the side walls of the pixel semiconductor patterns **110***a*. As shown, the sidewall multi-layered reflection layer **220** can be disposed between all of the pixel semiconductor patterns **110***a*. That is, the sidewall multi-layered reflection layer **220** can be disposed along the boundaries of all of the pixel semiconductor patterns **110***a*, and all of the pixel semiconductor patterns **110***a* can thus be separated by the sidewall multi-layered reflection layer **220**.

Alternatively, the sidewall multi-layered reflection layer **220** can enclose the side walls of a portion of the pixel semiconductor patterns **110***a* from the pixel semiconductor patterns **110***a*. In this case, those from the pixel semiconductor patterns **110***a* that are not selected may be extended and connected to adjacent pixel semiconductor patterns **110***a*. Here, the selected pixel semiconductor patterns **110***a* can be included in pixels that receive light of long wavelengths (for example, red light) and convert it to electrical signals. In the embodiments below, all of the side walls of the pixel semiconductor patterns **110***a* will be described as enclosed by the sidewall multi-layered reflection layer **220**, as shown in FIG. **1**.

The pixel semiconductor patterns **110***a* have first and second surfaces in parallel, i.e., that face one another. Here, the first surface of a pixel semiconductor pattern **110***a* is more proximate to the substrate **300** than is the second surface. A device isolation pattern **130** that separates an active region **120** is disposed on the first surface of the pixel semiconductor pattern **110***a*. The device isolation pattern **130** can be in a shape that fills a trench **125** formed on the first surface of the pixel semiconductor pattern **110***a*. The pixel isolation pattern **130** also has a first surface and a second surface in parallel, i.e., that face one another. The first surface of the device isolation pattern **130** is more proximate to the substrate **300** than is the second surface. The second surface of the device isolation pattern **130** can be below the second surface of the pixel semiconductor pattern **110***a*. That is, the thickness of the pixel semiconductor pattern **110***a* is greater than the depth of the trench **125** with respect to the first surface of the pixel semiconductor pattern **110***a*.

The active region **120** can be divided into a first section **115** and a second section **117**. The first section **115** of the active region **120** is a section in which the photodiode **145** is formed, and the second section **117** of the active region **120** is a section in which at least one MOS transistor is formed. The second section **117** of the active region **120** is connected to one side of the first section **115** of the active region **120**. The photodiode **145** also has a first surface and a second surface that face each other. Here, the first surface of the photodiode **145** is coplanar with the first surface of the pixel substrate pattern **110***a*. As shown in FIG. **2**, the second surface of the photodiode **145** can share a common surface with the second surface of the pixel substrate pattern **110***a*. Alternatively, the

second surface of the photodiode **145** can be lower than the second surface of the pixel semiconductor pattern **110***a*. That is, the thickness of the photodiode **145** can be less than the thickness of the pixel semiconductor pattern **110***a*.

An interlayer insulating layer **200** is interposed between the pixel semiconductor pattern **110***a* and the substrate **300**. The interlayer insulating layer **200** can be formed of multiple insulating layers **165**, **180**, and **195**. A gate electrode **140** is disposed between the interlayer insulating layer **200** and the pixel semiconductor pattern **110***a*. The gate electrode **140** is disposed between the interlayer insulating layer **200** and the active region **120**. The gate electrode **140** can be interposed between the second section **117** proximate to the first section **115** and the interlayer insulating layer **200**. A gate insulating layer **135** is interposed between the gate electrode **140** and the active region **120**. The gate insulating layer **135** can be formed of an oxide layer—preferably a thermal oxide layer. The gate electrode **140** is formed of a conductive material. For example, the gate electrode **140** can include at least one material selected from a group comprising a doped semiconductor, a metal (i.e., tungsten or molybdenum), a conductive metal nitride (i.e., titanium nitride or tantalum nitride), and a metal silicide (i.e., tungsten silicide or cobalt silicide). In the drawings, one gate electrode **140** is shown. Alternatively, when pixels of an image sensor require a plurality of MOS transistors, a plurality of gate electrodes can be separately arranged between the pixel semiconductor patterns **110***a* and the interlayer insulating layer **200**. The plurality of gate electrodes is arranged between the interlayer insulating layer **200** and the second section **117** of the active region **120**. The gate electrode **140** has a first surface and a second surface facing each other. Here, the first surface of the gate electrode **140** is proximate to the pixel semiconductor pattern **110***a*.

A floating doped region **150** is disposed within the second section **117** of the active region **120** on one side of the gate electrode **140**. The floating doped region **150** is doped with a dopant of the second conductive type. The floating doped region **150** and the photodiode **145** are separated from each other. The floating doped region **150** has a first surface and a second surface facing each other. The first surface of the floating doped region **150** shares the same surface with the first surface of the pixel semiconductor pattern **110***a*. The second surface of the floating doped region **150** is lower than the second surface of the photodiode **145**.

A base multi-layered reflection layer **155***a* is interposed between the photodiode **145** and the interlayer insulating layer **200**. The base multi-layered reflection layer **155***a* can be extended to cover a side wall of the gate electrode **140**. Furthermore, the base multi-layered reflection layer **155***a* can be further extended to cover a portion of the second surface of the gate electrode **140**. A gate spacer **155***b* can be disposed on another side wall of the gate electrode **140** proximate to the floating doped region **150**. The gate spacer **155***b* can include the same material as the base multi-layered reflection layer **155***a*. A detailed description of the base multi-layered reflection layer **155***a* will henceforth be given.

As described above, the interlayer insulating layer **200** includes a plurality of insulating layers **165**, **180**, and **195**. Here, the closest insulating layer **165** to the pixel semiconductor pattern **110***a* will be referred to as a first insulating layer **165**, and the insulating layers **180** and **195** in sequence below the first insulating layer **165** will be referred to respectively as the second insulating layer **180** and the third insulating layer **195**. A first line **175** is disposed between the first insulating layer **165** and the second insulating layer **180**, and a first contact plug **170** passes through the first insulating layer **165** and connects the gate electrode **140** to the first line **175**. A second line **190** is interposed between the second insulating layer **180** and the third insulating layer **195**, and a second contact plug **185** passes through the second insulating layer **180** and connects the second line **190** to the first line **175**. While a description of the lines **175** and **190** of the second layer and the interlayer insulating layer **200**, including the three insulating layers **165**, **180**, and **195**, according to embodiments of the present invention has been provided, the number of layers of lines required by an image sensor can be different. Accordingly, the number of insulating layers that comprise the interlayer insulating layer **200** can be different. Also, the interlayer insulating layer **200** can include other layers that perform other functions. The lines **175** and **190** and the contact plugs **170** and **185** are formed of a conductive material. The insulating layers **165**, **180**, and **195** can be formed of oxide layers, for example.

A color filter **225** is disposed on the second surface of the pixel semiconductor pattern **110***a*, and a micro lens **230** that covers the photodiode **145** is disposed on the color filter **225**. External light passes through the micro lens **230** and the color filter **225**, and is incident on the second surface of the photodiode **145**.

Next, a detailed description of embodiments will be given of the base multi-layered reflection layer **155***a* and the sidewall multi-layered reflection layer **220**, with reference to FIGS. **3** and **4**. First, the base multi-layered reflection layer **155***a* will be described.

FIG. **3** is an enlarged view of section A in FIG. **2** for describing an embodiment of a base multi-layered reflection layer included in an image sensor according to aspects of the present invention.

Referring to FIGS. **1**, **2**, and **3**, the base multi-layered reflection layer **155***a* contacts the first surface of the pixel semiconductor pattern **110***a* on which the photodiode **145** is formed. The base multi-layered reflection layer **155***a* includes at least two stacked layers having different refractive indexes. Also, layers within the base multi-layered reflection layer **155***a* that contact the photodiode **145** have different refractive indexes to those of the pixel semiconductor patterns **110***a*.

The base multi-layered reflection layer **155***a* can include a first base multi-layered reflection layer **151** and a second base multi-layered reflection layer **152**. The refractive index of the first base multi-layered reflection layer **151** is different from the refractive indexes of the second base multi-layered reflection layer **152** and the pixel semiconductor pattern **110***a*. Here, the layer of the base multi-layered reflection layer **155***a* that contacts the pixel semiconductor pattern **110***a* can be the first base multi-layered reflection layer **151**. The reflective index of the first base multi-layered reflection layer **151** can be lower than the reflective indexes of the second base multi-layered reflection layer **152** and the pixel semiconductor pattern **110***a*. The first and second base multi-layered reflection layers **151** and **152** can be stacked in alternation at least once. In other words, the base multi-layered reflection layer **155***a* can include the first and second base multi-layered reflection layers **151** and **152** alternately stacked a plurality of times. The layer **154** contacting the interlayer insulating layer **200** of the base multi-layered reflection layer **155***a* can be the first base multi-layered reflection layer **151** or the second base multi-layered reflection layer **152**.

The difference in refractive indexes of the pixel semiconductor pattern **110***a* and the first base multi-layered reflection layer **151** contacting the pixel semiconductor pattern **110***a* can be substantial. In this case, external light is reflected at a high rate by a boundary surface (hereinafter referred to as the first boundary surface) between the pixel semiconductor pattern **110***a* and the base multi-layered reflection layer **155***a*.

Also, the base multi-layered reflection layer **155***a* has at least two layers with different refractive indexes. Thus, at least one boundary surface reflecting light is disposed in the base multi-layered reflection layer **155***a*. Hereinafter, the boundary surface in the base multi-layered reflection layer **155***a* is defined as the second boundary surface. Therefore, external light incident on the second surface of the photodiode **145** is reflected by the first boundary surface and at least one second boundary surface within the base multi-layered reflection layer **155***a*. The light reflected by the first and second boundary surfaces is incident again on the photodiode **145**. As a result, the rate at which the external light is absorbed by the photodiode **145** is increased to increase the light sensitivity of the image sensor.

To allow for constructive interference of light reflected by the first boundary surface and the second boundary surface within the base multi-layered reflection layer **155***a*, the thicknesses of the layers in the base multi-layered reflection layer **155***a* can be adjusted. There are many causes for constructive interference of light reflected by the first and second boundary surfaces. Examples can include refractive indexes of the first and second base multi-layered reflection layers **151** and **152**, wavelengths of external light, and/or the number of layers in the base multi-layered reflection layer **155***a*.

With the first and second base multi-layered reflection layers **151** and **152** alternately stacked three times, the first and second base multi-layered reflection layers **151** and **152** respectively formed of silicon oxide (with a refractive index of approximately 1.46) and silicon (with a refractive index of approximately 4), the pixel semiconductor pattern **110***a* also being silicon, and the external light having a long red-colored wavelength, the first floating reflective layer **151** can be approximately 800 Å, and the second floating reflective layer **152** can be approximately 400 Å.

Next, the sidewall multi-layered reflection layer **220** will be described with reference to FIG. **4**.

FIG. **4** is an enlarged view of section B in FIG. **2** for describing an embodiment of a sidewall multi-layered reflection layer included in an image sensor according to aspects of the present invention.

Referring to FIGS. **1**, **2**, **3**, and **4**, the sidewall multi-layered reflection layer **220** is disposed between the side walls of the pixel semiconductor patterns **110***a*. The sidewall multi-layered reflection layer **220** can contact the side walls of the pixel semiconductor patterns **110***a*. The boundary surface between the sidewall multi-layered reflection layer **220** and the pixel semiconductor pattern **110***a* will hereinafter be referred to as the third boundary surface. The layer contacting the side wall of the pixel semiconductor pattern **110***a* within the sidewall multi-layered reflection layer **220** can have a refractive index different from that of the pixel semiconductor pattern **110***a*. The sidewall multi-layered reflection layer **220** includes layers with different respective refractive indexes. That is, at least one boundary surface is present within the sidewall multi-layered reflection layer **220**. The boundary surface within the sidewall multi-layered reflection layer **220** will hereinafter be referred to as the fourth boundary layer.

The sidewall multi-layered reflection layer **220** includes a first sidewall reflection layer **210** and a second sidewall reflection layer **215**. The refractive index of the first sidewall reflection layer **210** is different from the refractive indexes of the pixel semiconductor pattern **110***a* and the second sidewall reflection layer **215**. In particular, the refractive index of the first sidewall reflection layer **210** can be lower than the refractive indexes of the pixel semiconductor pattern **110***a* and the second sidewall reflection layer **215**. The layer of the sidewall multi-layered reflection layer **220** that contacts the pixel semiconductor pattern **110***a* can be the first sidewall reflection layer **210**. The first sidewall reflection layer **210** can be a silicon oxide layer or a layer of air (with a refractive index of 1). The second sidewall reflection layer **215** can be a silicon layer.

The sidewall multi-layered reflection layer **220** includes a structure in which the first and second sidewall reflection layers **210** and **215** are stacked in an alternating manner a plurality of times on the side wall of the pixel semiconductor pattern **110***a*. The sidewall multi-layered reflection layer **220** is interposed between a pair of neighboring pixel semiconductor patterns **110***a*. Here, either side wall of the sidewall multi-layered reflection layer **220** contacts the neighboring pixel semiconductor pattern **110***a*. Both the layers of the sidewall multi-layered reflection layer **220** contacting the pair of neighboring pixel semiconductor patterns **110***a* can be the first sidewall reflection layer **210**. Thus, the occurrence of interference between neighboring pixels can be minimized.

The sidewall multi-layered reflection layer **220** minimizes incidence of the light (reflected by the base multi-layered reflection layer **155***a* at the first and second boundary surfaces) on the photodiode **145** within another pixel semiconductor pattern **110***a*. In other words, the sidewall multi-layered reflection layer **220** minimizes incidence of the light incident on a photodiode **145** that it encloses being incident on other pixels. Therefore, interference of the image sensor can be minimized, and image distortion can be minimized.

Light that is reflected from the first and second boundary surfaces is also reflected by the third boundary surface and also the fourth boundary surface within the sidewall multi-layered reflection layer **220**. As a result, the portion of the light reflected toward the sidewall multi-layered reflection layer **220** from the light reflected by the first and second boundary surfaces is incident again on the photodiode **145**, so that the absorption efficiency of external light is increased. Also, as described above, incidence of light reflected by the first and second boundary surfaces on neighboring pixels can be minimized. Therefore, interference between neighboring pixels of the image sensor can be minimized, and image distortion of the image sensor can be minimized.

The thicknesses of the layers of the sidewall multi-layered reflection layer **220** can be adjusted to induce constructive interference of light reflected by the third boundary surface and by the fourth boundary surface. Here, the thicknesses of the layers within the sidewall multi-layered reflection layer **220** are based on the side walls of the pixel semiconductor patterns **110***a*.

For example, with the sidewall multi-layered reflection layer **220** having a second sidewall reflection layer **215** interposed between two first sidewall reflection layers **210**, the first and second sidewall reflection layers **210** and **215** respectively formed of a silicon oxide layer and a silicon layer, and an external light being a red light with a long wavelength, the thicknesses of the first and second sidewall reflection layers **210** and **215** can be around 550 Å and 500 Å, respectively.

In the above-described example, when the first sidewall reflection layer **210** is a layer of air, and the second sidewall reflection layer **215** is a silicon layer, the thicknesses of the first and second sidewall reflection layers **210** and **215** can be around 740 Å and 520 Å, respectively.

As shown, the sidewall multi-layered reflection layer **220** can contact the device isolation pattern **130**. Also, the sidewall multi-layered reflection layer **220** can share the same surface as the second surface of the pixel semiconductor pattern **110***a*.

Alternatively, while sharing a common surface with the second surface of the pixel semiconductor pattern, the side-

wall multi-layered reflection layer **220** **110***a*, can be separated from the device isolation pattern **130**. The neighboring pixel semiconductor patterns **110***a*, in this case, can extend between and connect the sidewall multi-layered reflection layer **220** and the device isolation pattern **130**.

In another alternative embodiment, the sidewall multi-layered reflective layer **220** can contact the device isolation pattern **130**, and can have a side lower than the two sides of the pixel semiconductor pattern **110***a*. In this case, the portions of the neighboring pixel semiconductor patterns **110***a* that are higher than the sidewall multi-layered reflection layer **220** can extend sideways and connect together.

Next, a portion of the sidewall multi-layered reflection layer **220** can adopt a different form, which will be described with reference to the drawings. Like elements in the present embodiment use like reference numerals.

FIG. **5** is a sectional view of FIG. **1** taken along line I-I' for illustrating another embodiment of an image sensor according to aspects of the present invention.

Referring to FIG. **5**, a sidewall multi-layered reflection layer **220***a* can be disposed within a groove **206** formed between pixel semiconductor patterns **110***a*. The sidewall multi-layered reflection layer **220***a* includes a first sidewall reflection layer **212***a* and a second sidewall reflection layer **217***a* having different refractive indexes. The first sidewall reflection layer **212***a* has a refractive index different from that of a pixel semiconductor pattern **110***a*. In particular, the first sidewall reflection layer **212***a* can have a lower refractive index than the pixel semiconductor pattern **110***a* and the second sidewall reflection layer **217***a*. The first sidewall reflection layer **212***a* is substantially conformal to both side surfaces of the groove **206** and the surface of the groove **206** proximate to a device isolation pattern **130**. The second sidewall reflection layer **217***a* is disposed within the groove **206** and on the first sidewall reflection layer **212***a*. The first sidewall reflection layer **212***a* contacts both sides of the groove **206** (that is, the side walls of a pair of neighboring pixel semiconductor patterns), and the second sidewall reflection layer **217***a* contacts the first sidewall reflection layer **212***a*. The surface of the groove **206** neighboring the device isolation pattern **130** can either contact the device isolation pattern **130** or be separate from the device isolation pattern **130**.

The second sidewall reflection layer **217***a* is disposed on the first sidewall reflection layer **212***a*, and can also be substantially conformal to both side surfaces of the groove **206** and the surface of the groove **206** proximate to a device isolation pattern **130**. In this case, the first and second sidewall reflection layers **212***a* and **217***a* can be alternatingly disposed at least once. Here, the sidewall multi-layered reflection layer **220***a* can be disposed on a sidewall of the pixel semiconductor pattern **110***a* in an odd 5-layer or higher configuration.

In the present alternate embodiment, the first sidewall reflection layer **212***a* can be formed of a silicon oxide layer, and the second sidewall reflection layer **217***a* can be formed of a silicon layer.

Next, a description will be given of another embodiment of a sidewall multi-layered reflection layer according to aspects of the present invention. Like elements in the present embodiment use like reference numerals.

FIG. **6** is a sectional view of FIG. **1** taken along line I-I' for describing an alternate embodiment of an image sensor according to aspects of the present invention.

Referring to FIG. **6**, a sidewall multi-layered reflection layer **220***a*' is disposed within a groove **206'** formed between pixel semiconductor patterns **110***a*. The sidewall multi-layered reflection layer **220***a*' includes a first sidewall reflection layer **212***a*' and a second sidewall reflection layer **217***a*' having different refractive indexes. The first sidewall reflection layer **212***a*' has a refractive index different from that of the pixel semiconductor patterns **110***a*. In particular, the first sidewall reflection layer **212***a*' can have a lower refractive index than the pixel semiconductor patterns **110***a* and the second sidewall reflection layer **217***a*'. The first sidewall reflection layer **212***a*' is substantially conformal to both side surfaces of the groove **206'** and the surface of the groove **206'** proximate to a color filter **225**. The second sidewall reflection layer **217***a*' is disposed below the first sidewall reflection layer **212***a*'. The first sidewall reflection layer **212***a*' contacts both sides of the groove **206'**. The second sidewall reflection layer **217***a*' contacts the first sidewall reflection layer **212***a*'. The surface of the groove **206'** neighboring the color filter **225** can contact the color filter **225**. Alternately, the surface of the groove **206'** neighboring the color filter **225** can be separated from the color filter **225**.

The second sidewall reflection layer **217***a*' is disposed below the first sidewall reflection layer **212***a*', and can be substantially conformal to either side surfaces of the groove **206'** and the surface of the groove **206'** proximate to the color filter **225**. In this case, the first and second sidewall reflection layers **212***a*' and **217***a*' can be alternatively disposed at least once. The first and second sidewall reflection layers **212***a*' and **217***a*' can be extended into a trench **125**. Thus, a device isolation pattern **130'** can include the extended portions of the first and second sidewall reflection layers **212***a*' and **217***a*'. Also, the device isolation pattern **130'** can further include a device isolation insulating material, such as oxide material filling a portion of the trench **125**.

Next, embodiments of methods of forming an image sensor according to aspects of the present invention will be described with reference to the drawings.

FIGS. **7** through **14** are sectional views showing an embodiment of a method of forming an image sensor according to aspects of the present invention. of the semiconductor substrate **102** (that is, the surface facing the surface adjacent to the semiconductor layer **110**) to expose the semiconductor layer **110**. Here, the polishing process can be a time etch process that performs etching over a predetermined duration.

Referring to FIG. **13**, the exposed second surface of the semiconductor layer **110** can selectively be etched to form a plurality of grooves **205** surrounding the pixel semiconductor patterns **110***a*. The grooves **205** surround one pixel semiconductor pattern **11***a* in layers. That is, the plurality of grooves are formed between a pair of neighboring pixel semiconductor patterns **110***a*. A residual portion **215** of the semiconductor layer **110** is disposed between the grooves **205**.

Referring to FIG. **14**, the grooves **205** are filled with a predetermined material. Thus, a sidewall multi-layered reflection layer **220** is formed on the sidewall of the pixel semiconductor pattern **110***a*. The sidewall multi-layered reflection layer **220** includes a material layer **210** filling the grooves **205** and the residual portion **215** of the semiconductor layer **110** disposed between the grooves **205**. The material layer **210** filling the grooves **205** corresponds to the first sidewall reflection layer **210** described with reference to FIGS. **1** through **4**, and the residual portion **215** corresponds to the second sidewall reflection layer **215** described with reference to FIGS. **1** through **4**.

The number of layers of the sidewall multi-layered reflection layer **220** formed on the side walls of the pixel semiconductor pattern **110***a* varies according to the number of the grooves **205**. As shown, when two the grooves **205** are formed, the sidewall multi-layered reflection layer **220** has three layers. Alternately, when three the grooves **205** are

formed to enclose one pixel semiconductor pattern **110***a*, the number of layers of the sidewall multi-layered reflection layer **220** is five.

A color filter **225** is formed over the second substrate **300** having the sidewall multi-layered reflection layer **220**. The second substrate **300** having the grooves **205** can be exposed to air before the color filter **225** is formed. Here, the color filter **225** can be formed of a polymer with a high viscosity. Accordingly, the groove **205** can be filled with air, so that the first sidewall reflection layer **210** can be formed of a layer of air. Alternately, after the plurality of grooves **205** is formed, a silicon oxide layer that fills the plurality of grooves **205** can be formed, and the silicon oxide layer can be planarized until the second surface of the pixel semiconductor pattern **110***a* (that is, the second surface of the semiconductor layer) is exposed, to form the first sidewall reflection layer **210**.

To continue, a micro lens **230** of a second conductivity is formed on the color filter **225** to realize the image sensor shown in FIG. **2**.

A description of an alternate embodiment of a method for forming the sidewall multi-layered reflection layer will be given with reference to the diagrams. A method of forming an image sensor according to the alternate embodiment includes the forming methods described with reference to FIGS. **7** through **12**.

FIGS. **15** through **17** are sectional views showing an alternate embodiment of a method of forming an image sensor according to aspects of the present invention.

Referring to FIG. **15**, after the remaining portions of the first substrate **100** are removed to expose the second surface of the semiconductor layer **110** as in FIG. **12**, the exposed second surface of the semiconductor layer **110** is selectively etched to form a groove **206** for defining a pixel semiconductor pattern **110***a*. The pixel semiconductor pattern **110***a* is enclosed by one groove **206**.

Referring to FIG. **16**, a first material layer **212** is formed in conformity with a second substrate **300** having the groove **206**, and a second material layer **217** is formed on the first material layer **212**. The first material layer **212** is formed in conformity to both sides and the floor of the groove **206**. The second material layer **217**, as shown, is disposed on the first material layer **212**, and fills the groove **206**. Alternately, the second material layer **217** can also be disposed on the first material layer **212** and be formed in conformity with both sides and the floor of the groove **206**. In this case, the first and second material layers **212** and **217** can be alternatively formed at least once. Here, the uppermost layer of the material layers is the first material layer **212** or the second material layer **217**.

Referring to FIG. **17**, the second and first material layers **217** and **212** are planarized until the pixel semiconductor pattern **110***a* is exposed to form a sidewall multi-layered reflection layer **220***a* within the groove **206**. Next, a color filter **225** is formed on a second substrate **300** having the sidewall multi-layered reflection layer **220***a*. The micro lens **230** shown in FIG. **5** is formed on the color filter **225**. Thus, the image sensor in FIG. **5** is formed.

In an alternate embodiment of a method, the sidewall multi-layered reflection layer according to aspects of the present invention can be formed before the first and second substrates are bonded. This will be described with reference to the drawings of FIGS. **18** and **19**. Like elements in the present embodiment use like reference numerals.

FIGS. **18** and **19** are sectional views for describing an alternate embodiment of a method for forming an image sensor according to aspects of the present invention. The forming method of an image sensor according to the alternate example can include the method of forming the trench **125** that limits the active region depicted in FIG. **7**.

Referring to FIG. **18**, a first substrate **100** having a semiconductor layer **110** is prepared, after which the semiconductor layer **110** is patterned to form a trench **125** that restricts an active region. Next, the floor of the trench **125** is selectively etched to form a plurality of grooves **205'**. The plurality of grooves **205'** defines a pixel semiconductor pattern **110***a*. That is, the plurality of grooves **205'** encloses one pixel semiconductor pattern **110***a* in layers. The grooves **205'** are spaced apart from one another. Thus, the residual portion **215** of the semiconductor layer **110** is left between the grooves **205'**.

Referring to FIG. **19**, an oxide layer if formed to fill the trench **125** and the grooves **205'**. Here, the portion of the oxide layer filling the trench **125** corresponds to a device isolation pattern **130**, and the portion of the oxide layer filling the groove **205'** corresponds to a first sidewall reflection layer **210**. The residual portion **215** of the semiconductor layer **110** between the grooves **205'** is a second sidewall reflection layer **215**. Thus, a sidewall multi-layered reflection layer **220** is formed on the sidewall of the pixel semiconductor pattern **110***a*.

Next, a gate insulation layer **135** and a gate electrode **140** are formed in sequence on the active region defined by the device isolation pattern **130**, a photodiode **145** is formed on the active region on one side of the gate electrode **140**, and a floating doped region **150** is formed on the active region on the other side of the gate electrode **140**. The subsequent processes can be performed in the same manner as in the preceding description with reference to FIGS. **9** through **12**. By forming a color filter **225** on a second surface of the pixel semiconductor pattern **110***a* exposed after the removal of a separation layer **105** and a semiconductor substrate **102** (being the remaining portions of the first substrate **100**), and forming a micro lens **230** on the color filter **225**, the image sensor according to aspects of the present invention can be formed.

Next, an embodiment of a method of forming the image sensor in FIG. **6** will be described. In this method, the sidewall multi-layered reflection layer is also formed before the first and second substrates are bonded. Like elements as those described above also use like reference numerals in the present alternate embodiment.

FIGS. **20** through **22** are sectional views for describing an alternate method of forming an image sensor according to embodiments of the present invention. The method of forming the image sensor according to the present alternate example can include the forming of the trench **125** that limits the active region described with reference to FIG. **7**.

Referring to FIG. **20**, after a trench **125** for limiting an active region on a silicon layer **110** included on a first substrate **100** is formed, a groove **206'** is formed through selectively etching the floor of the trench **125**. The groove **206'** defines a pixel semiconductor pattern **110***a*, whereby one groove **206'** encloses the pixel semiconductor pattern **110***a*. That is, one groove **206'** is formed between a pair of adjacent pixel semiconductor patterns **110***a*.

Referring to FIG. **21**, a first material layer is formed in conformity to a first pattern **100** having the groove **206'** and the trench **125**, and a second material layer is formed on the first material layer. The first material layer is formed in conformity on both side surfaces and the floor of the groove **206'**. The second material layer can fill the groove **206'**, as shown. Alternately, the second material layer can be disposed on the first material layer and be disposed in conformity to both side surfaces and the floor of the groove **206'**. In this case, the first and second material layers can be alternatingly formed at

least once. Here, the uppermost layer of the material layers can be the first material layer or the second material layer. The first and second material layers are also formed inside the trench **125**. After the first and second material layers are formed, if a portion of the trench **125** is unfilled, an oxide layer **129** can be used to fill the unfilled portion of the trench **125**.

In addition, the oxide layer **129** and the second and first material layers are planarized until the pixel semiconductor pattern **110***a* is exposed. Thus, a device isolation layer **130'** and a sidewall multi-layered reflection layer **220***a*' are formed. The sidewall multi-layered reflection layer **220***a* includes a first sidewall reflection layer **212***a*' and a second sidewall reflection layer **217***a*'. The first and second sidewall reflection layers **212***a*' and **217***a*' are respectively a portion of a first material layer and a portion of a second material layer disposed on the groove **206'**. As a detailed description of the first and second sidewall reflection layers **212***a*' and **217***a*' has already been provided with reference to FIG. **6**, a repetition thereof will be omitted.

Referring to FIG. **22**, a gate insulating layer **135** and a gate electrode **140** are formed in sequence on the active region defined by the device isolation pattern **130'**, a photodiode **145** is formed on the active region on one side of the gate electrode **140**, and a floating doped region **150** is formed on the active region on the other side of the gate electrode **140**. The following processes can be the same as those already described with reference to FIGS. **9** through **12**. The color filter **225** and micro lens **230** in FIG. **6** can be formed on the second surface of the exposed pixel semiconductor pattern **110***a* after the removal of the remaining portion of the first substrate **100**, thereby forming the image sensor shown in FIG. **6**.

As described above, according to the present invention, a photodiode that admits light is disposed on the upper portion of a substrate, and an interlayer insulating layer is interposed between the photodiode and the substrate. Here, a base multi-layered reflection layer is disposed between the photodiode and the interlayer insulating layer. Thus, light that is incident on the photodiode is reflected by the base multi-layered reflection layer and re-enters the photodiode. Resultantly, the sensitivity of the image sensor is improved.

Also, a sidewall multi-layered reflection layer encloses the sidewalls of the pixel semiconductor patterns forming the photodiode. Therefore, incidence of the light reflected by the base multi-layered reflection layer on neighboring pixels can be minimized. As a result, interference between pixels can be minimized by the sidewall multi-layered reflection layer in order to minimize image distortion in the image sensor.

The above-disclosed subject matter is to be considered illustrative, and not restrictive, and the appended claims are intended to cover all such modifications, enhancements, and other embodiments, which fall within the true spirit and scope of the present invention. Thus, to the maximum extent allowed by law, the scope of the present invention is to be determined by the broadest permissible interpretation of the following claims and their equivalents, and shall not be restricted or limited by the foregoing detailed description.

What is claimed is:

1. An image sensor comprising:

a pixel semiconductor pattern disposed on a substrate;

an interlayer insulating layer interposed between the pixel semiconductor pattern and the substrate;

a photodiode in the pixel semiconductor pattern;

a base multi-layered reflection layer interposed between the photodiode and the interlayer insulating layer, wherein the base multi-layered reflection layer includes a plurality of layers with different refractive indexes relative to each other, and a refractive index of a layer of the base multi-layered reflection layer that contacts the pixel semiconductor pattern is different from a refractive index of the pixel semiconductor pattern; and wherein the base multi-layered reflection layer includes a first base reflection layer and a second base reflection layer that are stacked, wherein:

the first base reflection layer has a refractive index that is lower than refractive indexes of the second base reflection layer and the pixel semiconductor pattern,

a layer of the base multi-layered reflection layer that contacts the pixel semiconductor pattern is the first base reflection layer, and

the first and second base reflection layers are alternatingly stacked at least once

a sidewall multi-layered reflection layer disposed on a sidewall of the pixel semiconductor pattern, wherein the sidewall multi-layered reflection layer surrounds the photodiode.

2. The image sensor of claim **1**, wherein the layers of the base multi-layered reflection layer have thicknesses that induce constructive interference of light reflected by at least one boundary of the base multi-layered reflection layer and a boundary between the base multi-layered reflection layer and the pixel semiconductor pattern.

3. The image sensor of claim **1**, further comprising:

a color filter covering the pixel semiconductor pattern; and

a micro lens disposed on the color filter and covering the photodiode, wherein the pixel semiconductor pattern is disposed between the color filter and the substrate.

* * * * *