US007709775B2

(12) **United States Patent**
Konno et al.

(10) **Patent No.: US 7,709,775 B2**
(45) **Date of Patent: May 4, 2010**

(54) **SOLID-STATE IMAGING ELEMENT, PHOTO-DETECTOR AND AUTHENTICATION SYSTEM USING THE PHOTO-DETECTOR**

(75) Inventors: **Yasutaka Konno**, Saitama (JP); **Hironori Ueki**, Hachioji (JP)

(73) Assignee: **Hitachi, Ltd.**, Tokyo (JP)

(*) Notice: Subject to any disclaimer, the term of this patent is extended or adjusted under 35 U.S.C. 154(b) by 103 days.

(21) Appl. No.: **11/955,882**

(22) Filed: **Dec. 13, 2007**

(65) **Prior Publication Data**

US 2008/0142686 A1 Jun. 19, 2008

(30) **Foreign Application Priority Data**

Dec. 15, 2006 (JP) 2006-338489

(51) **Int. Cl.**
G06K 5/00 (2006.01)
H01L 27/00 (2006.01)

(52) **U.S. Cl.** **250/208.1**; 250/556

(58) **Field of Classification Search** 250/555–557, 250/271, 221, 208.1; 382/115–127; 356/71, 356/73; 283/68, 69; 396/14, 15; 340/5.51–5.53, 340/5.8–5.83; 438/57–98; 257/414, 428, 257/431–466, 59, 72

See application file for complete search history.

(56) **References Cited**

U.S. PATENT DOCUMENTS

5,500,055 A 3/1996 Toyama et al.
6,252,157 B1 * 6/2001 Nishio 136/257
2004/0184641 A1 * 9/2004 Nagasaka et al. 382/124
2007/0138470 A1 * 6/2007 Alieu et al. 257/59

FOREIGN PATENT DOCUMENTS

JP 05-218469 8/1993
JP 2001-100389 4/2001
JP 2004-247686 9/2004

* cited by examiner

Primary Examiner—Georgia Y Epps
Assistant Examiner—Pascal M Bui-Pho
(74) *Attorney, Agent, or Firm*—Antonelli, Terry, Stout & Kraus, LLP.

(57) **ABSTRACT**

In a solid-state imaging element, reflecting layers are provided on both sides of a photoelectric conversion means, a light entrance window **128** is provided in the first reflecting layer **121** disposed on the photon incidence side, and a concentration means **122** is provided at a position corresponding to the window. Further, a transparent layer **136** is provided between the photoelectric conversion means and a second reflecting layer **120**. A structure where photons that entered between the two reflecting layers do not flow outside is preferably employed as the shape of the second reflecting layer **120**. According to the present invention, detection sensitivity of a solid-state imaging element and a photo-detector using the same is improved, and a personal authentication system carrying a photo-detector showing improved detection sensitivity is provided.

21 Claims, 21 Drawing Sheets

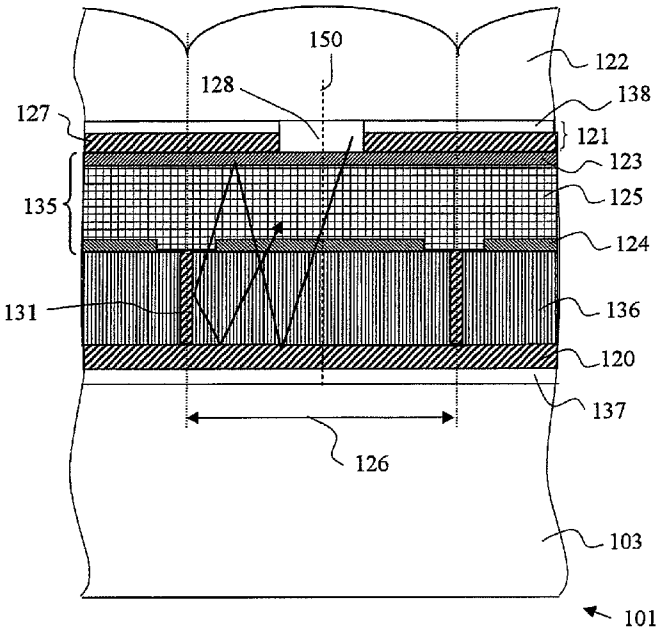

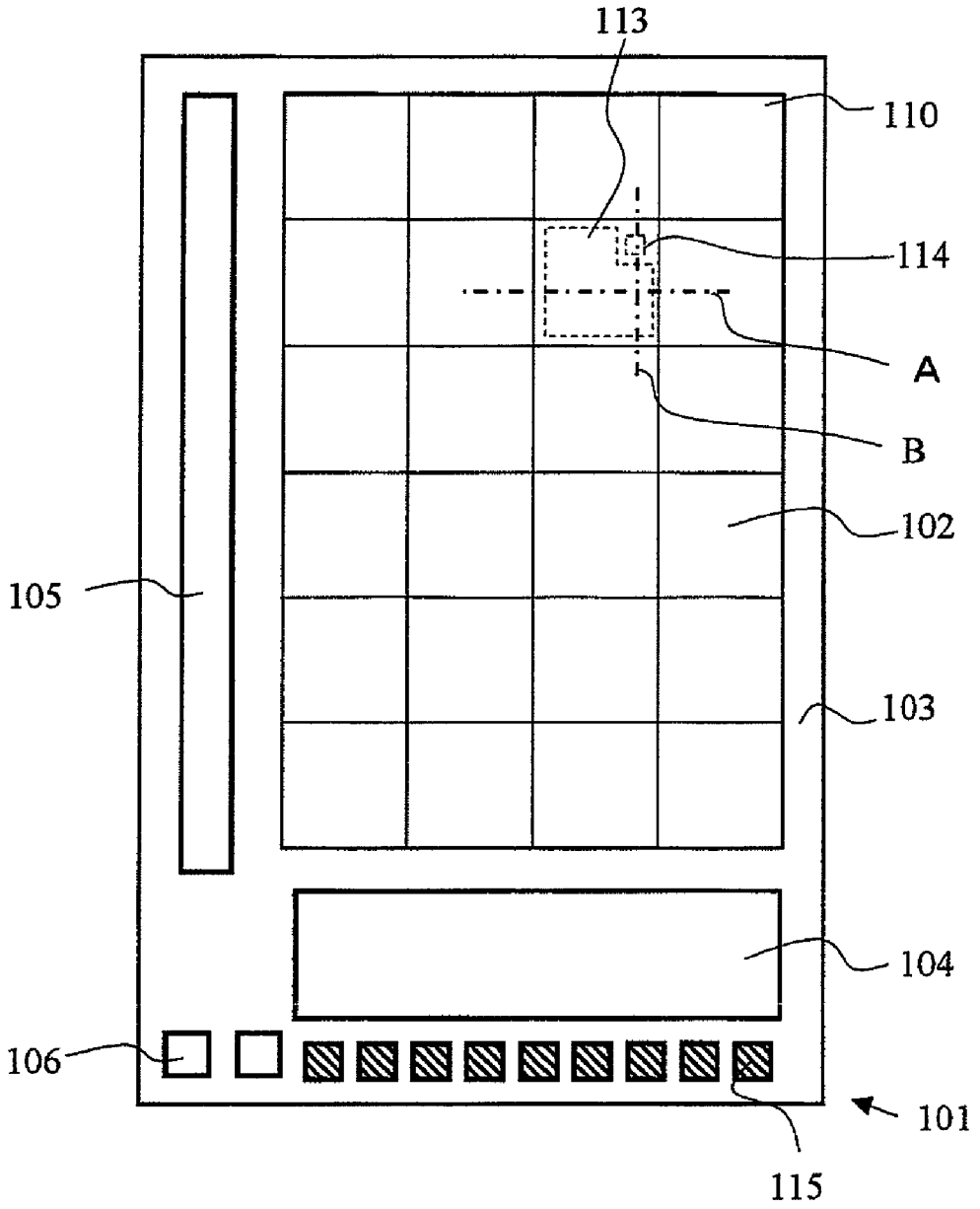

Fig.1

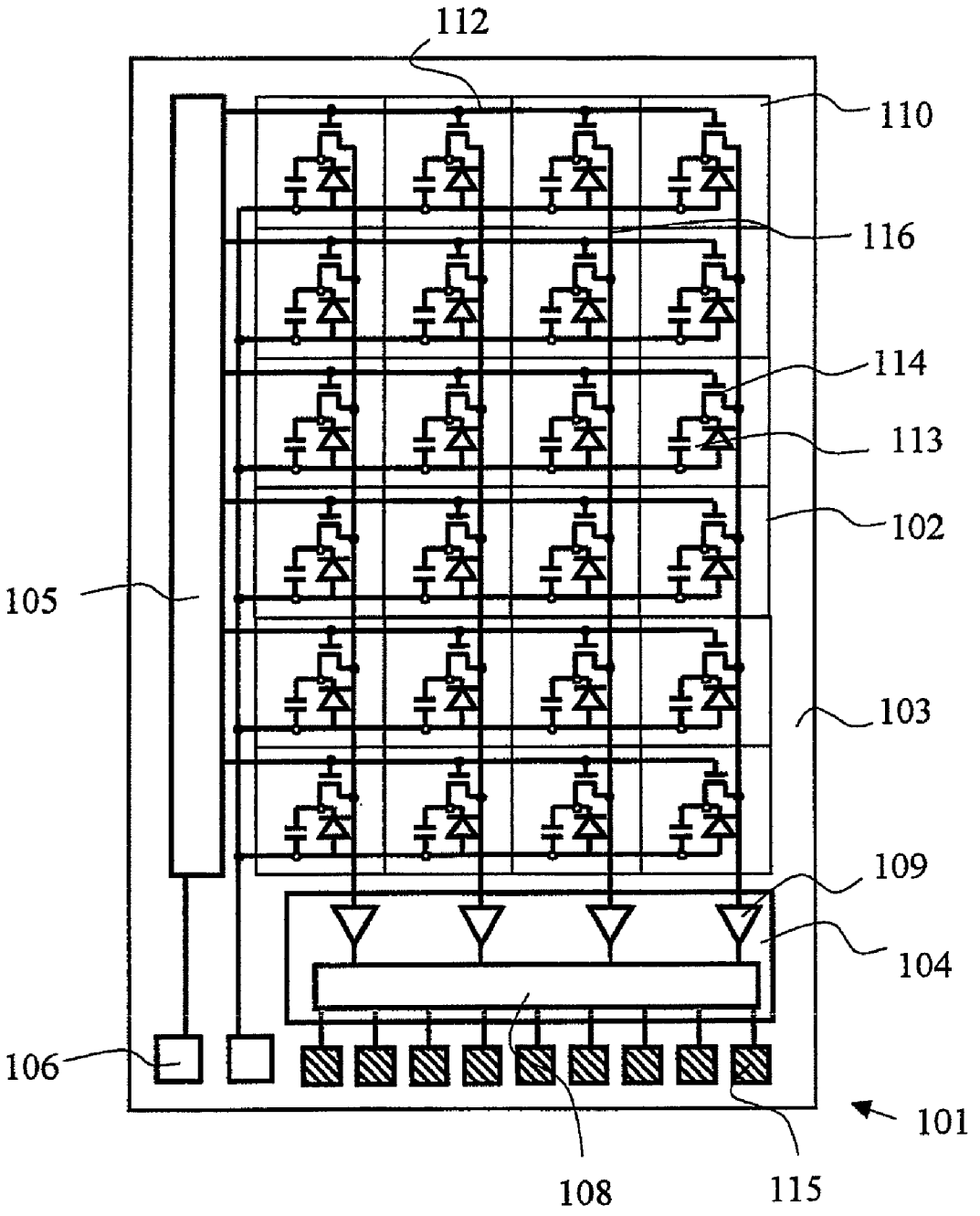

Fig.2

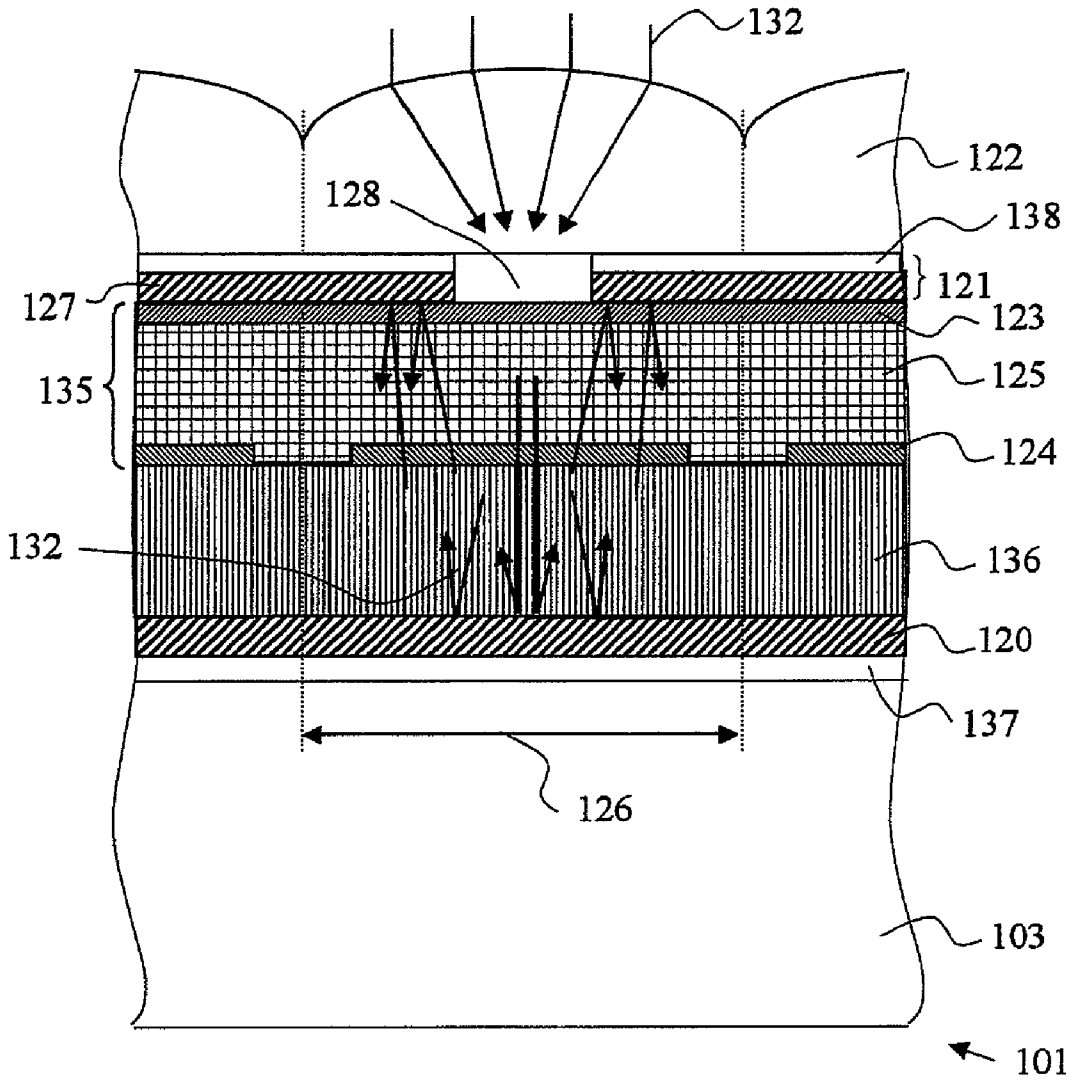
132
122
128
138
121
127
123
135
125
124
132
136
120
137
126
103
101

Fig.3

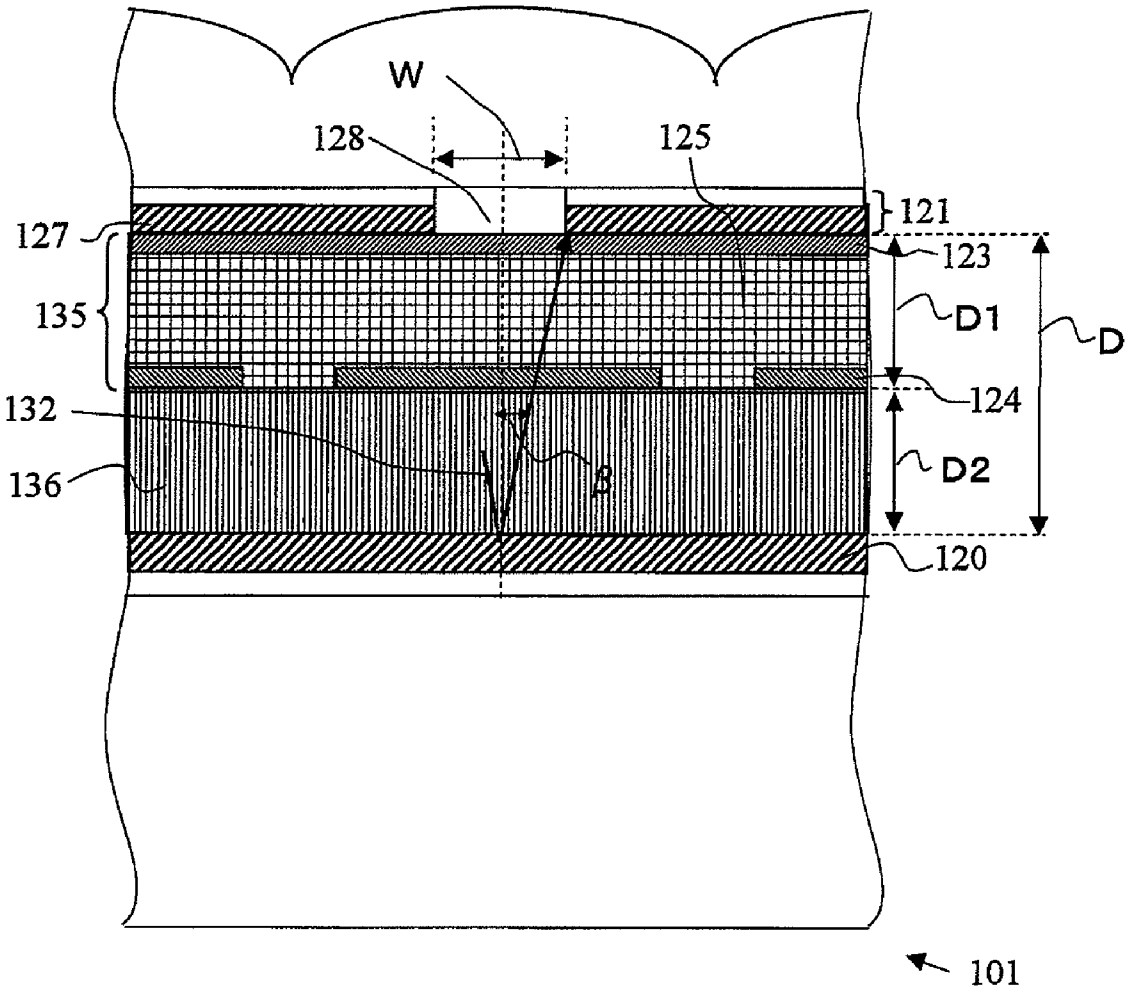

Fig.4

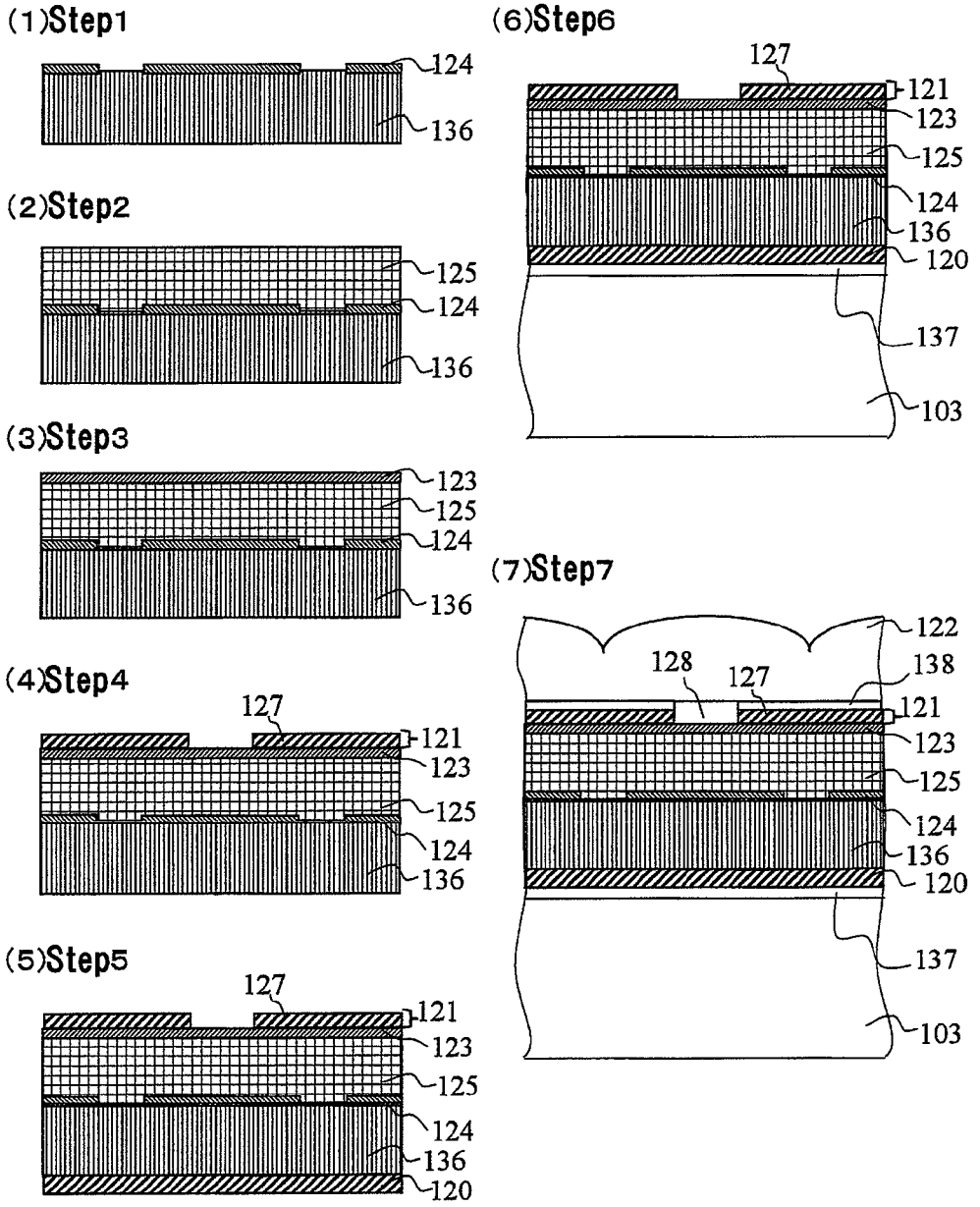
(1)Step1
124
136
(2)Step2
125
124
136
(3)Step3
123
125
124
136
(4)Step4
127
121
123
125
124
136
(5)Step5
127
121
123
125
124
136
120
(6)Step6
127
121
123
125
124
136
120
137
103
(7)Step7
122
128
127
138
121
123
125
124
136
120
137
103

Fig.5

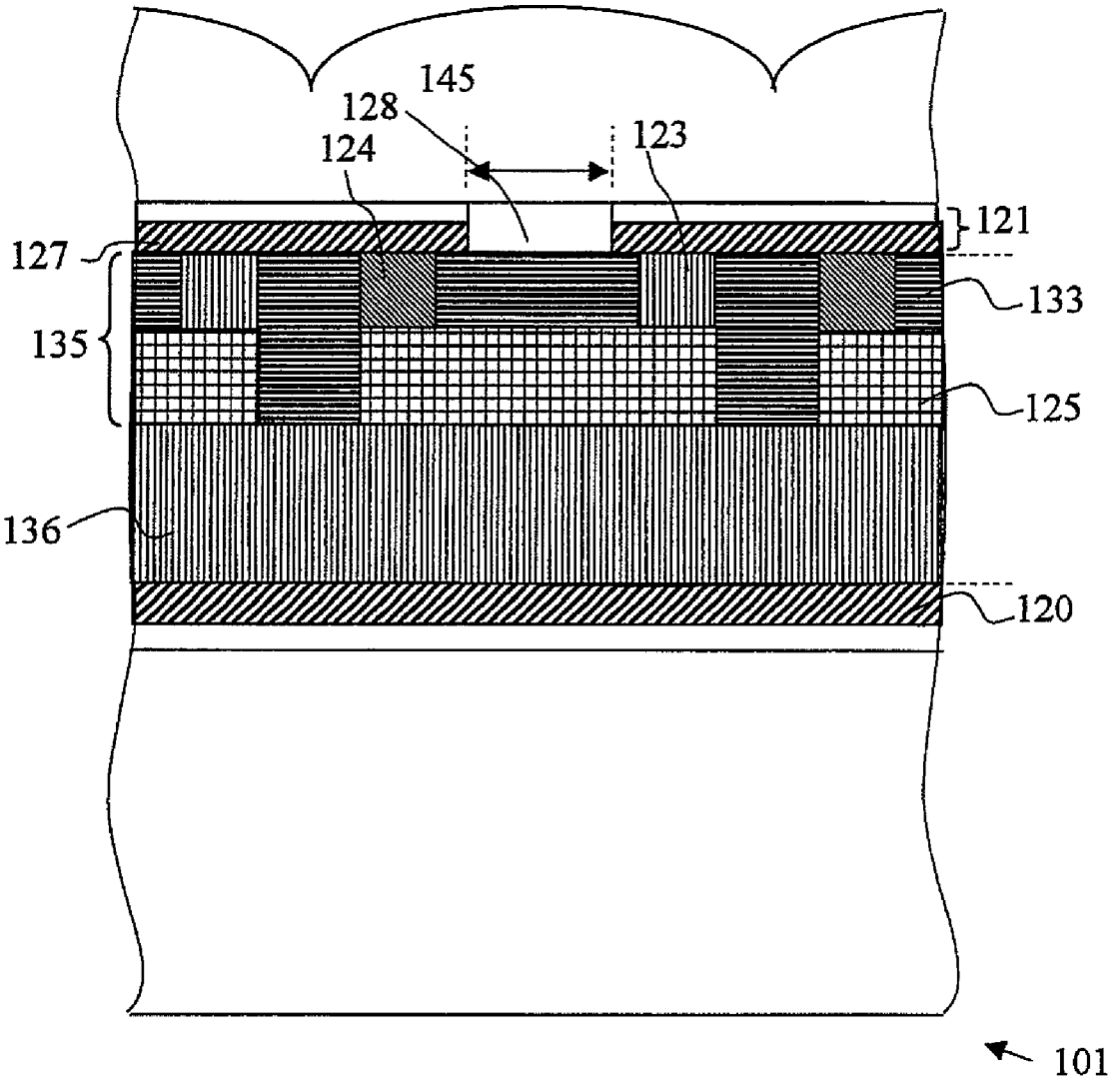

Fig.6

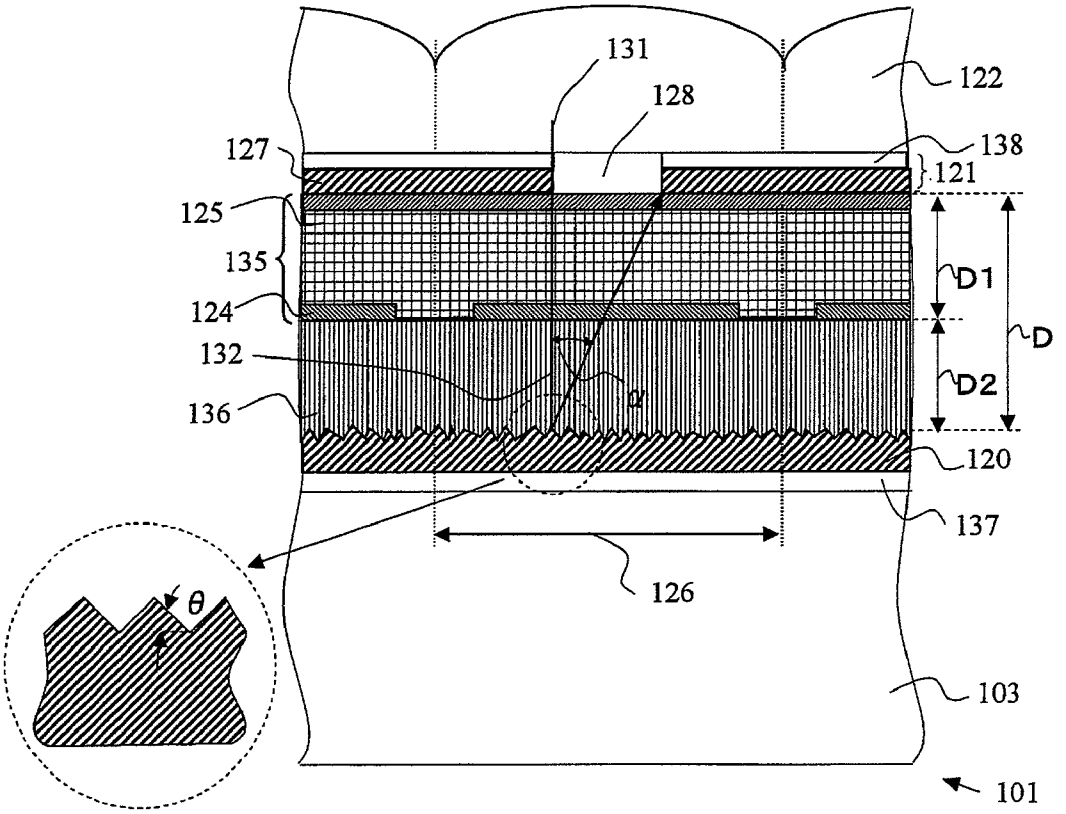
131
128
122
127
138
121
125
135
124
D1
D
132
α
D2
136
120
137
126
θ
103
101

Fig.7

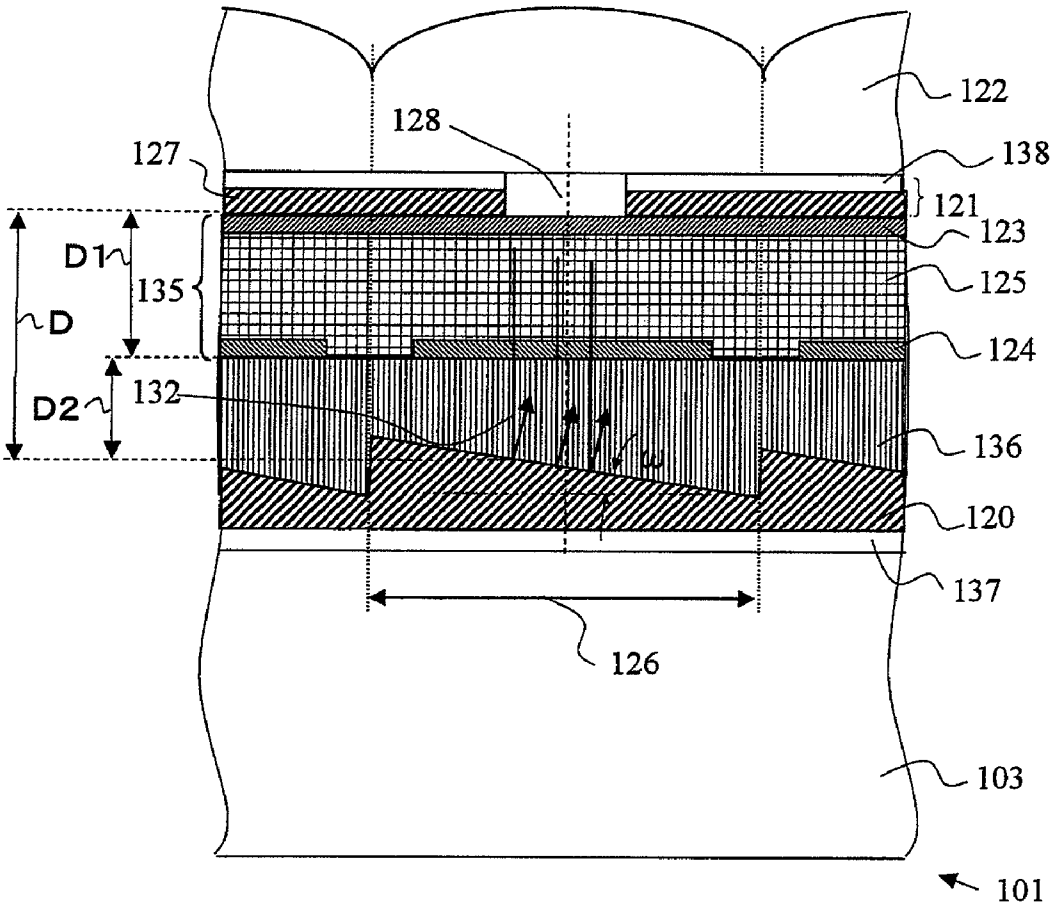
122
128
138
127
121
123
D1
135
125
D
124
D2
132
136
120
137
126
103
101

Fig.8

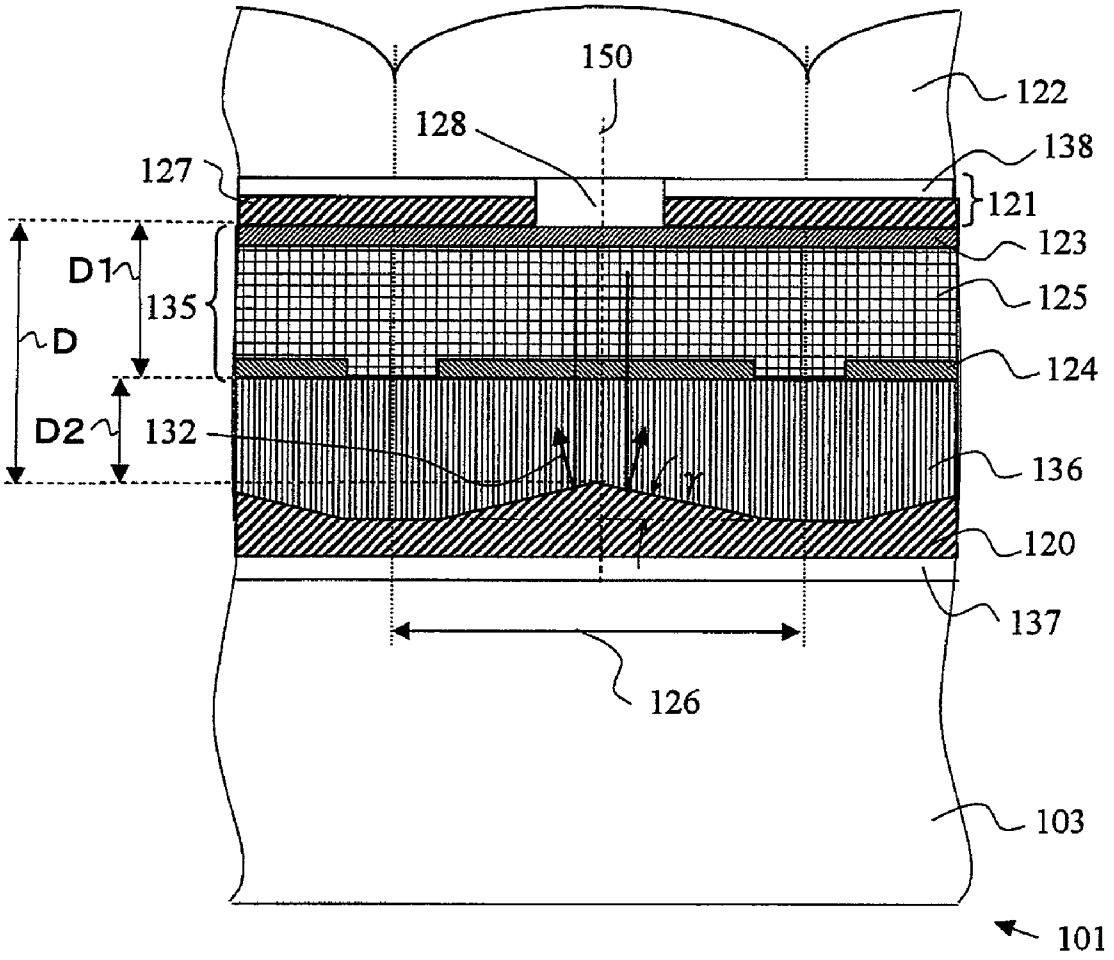
150
122
128
138
127
121
123
D1
135
125
D
124
D2
132
136
120
137
126
103
101

Fig.9

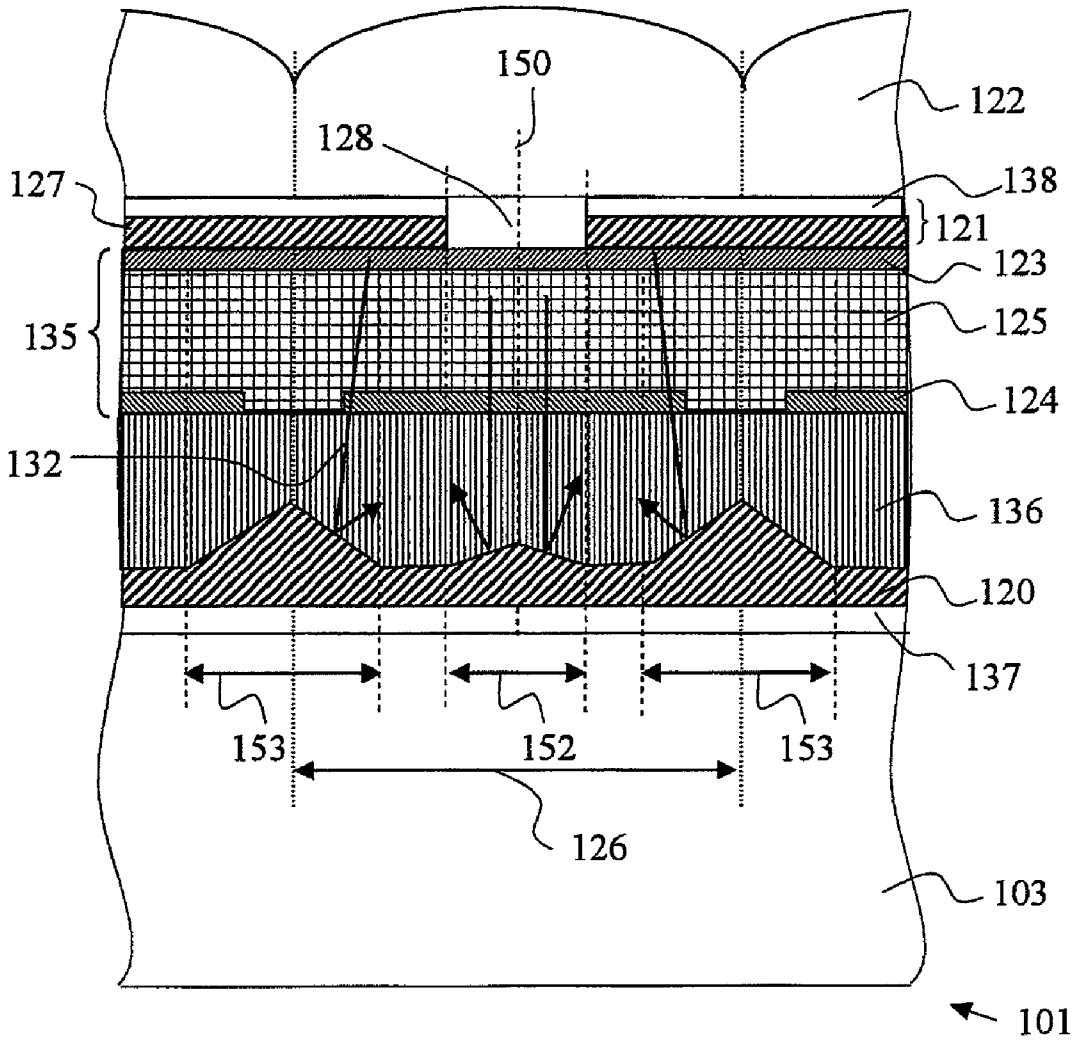
150
122
128
127
138
121
123
135
125
124
132
136
120
137
153
152
153
126
103
101

Fig.10

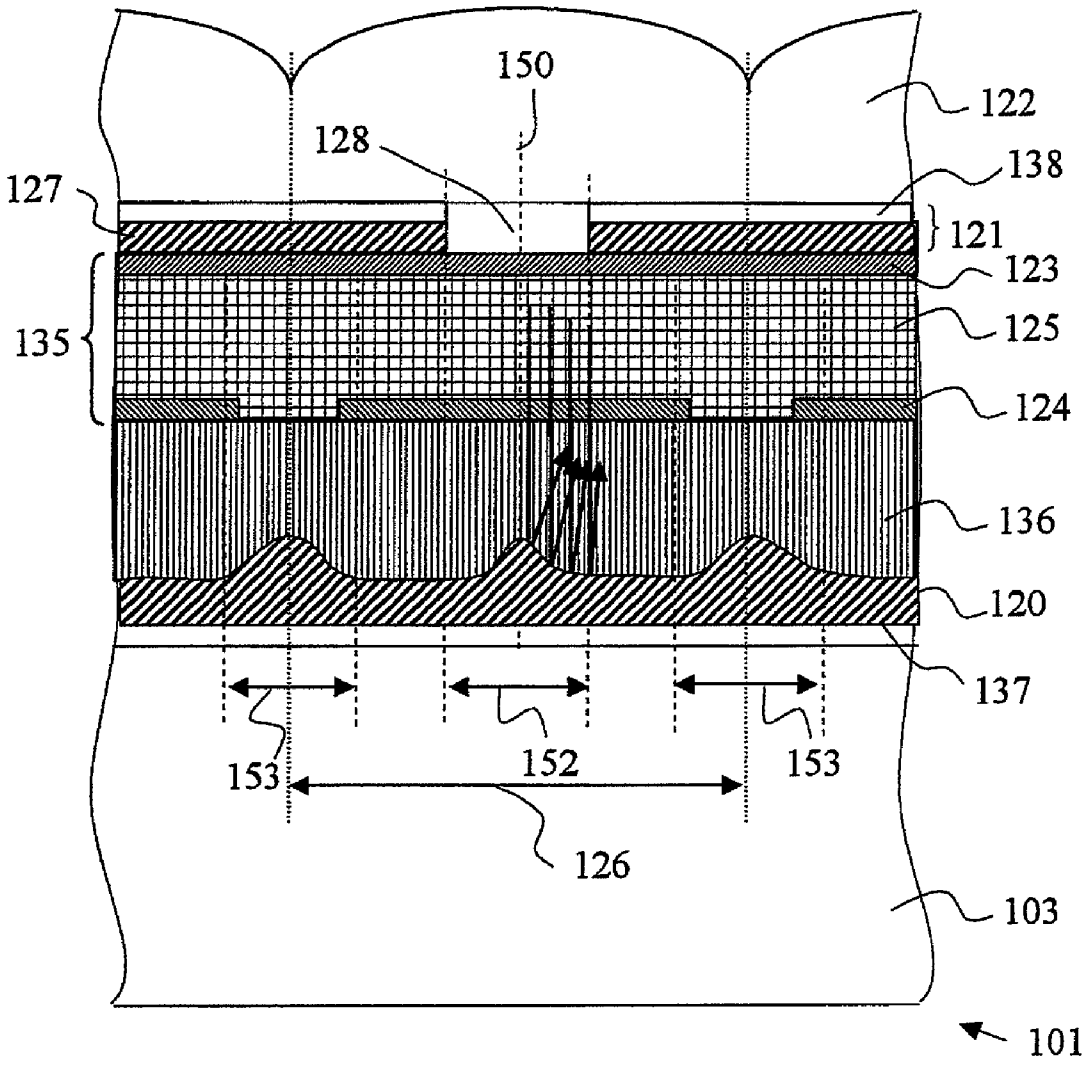
150
122
128
138
127
121
123
135
125
124
136
120
137
153
152
153
126
103
101

Fig.11

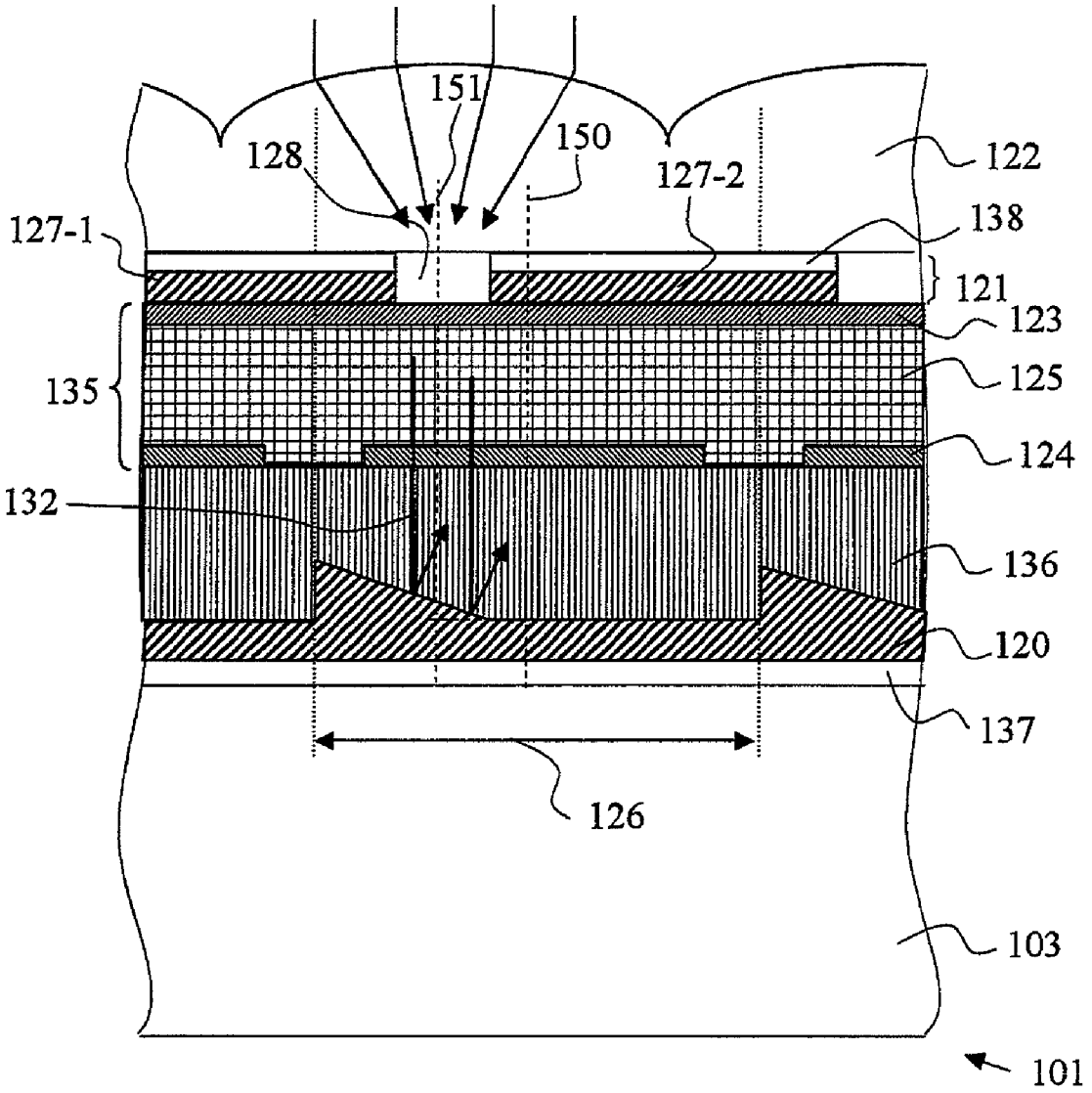
151
150
128
127-2
122
138
127-1
121
123
135
125
124
132
136
120
137
126
103
101

Fig.12

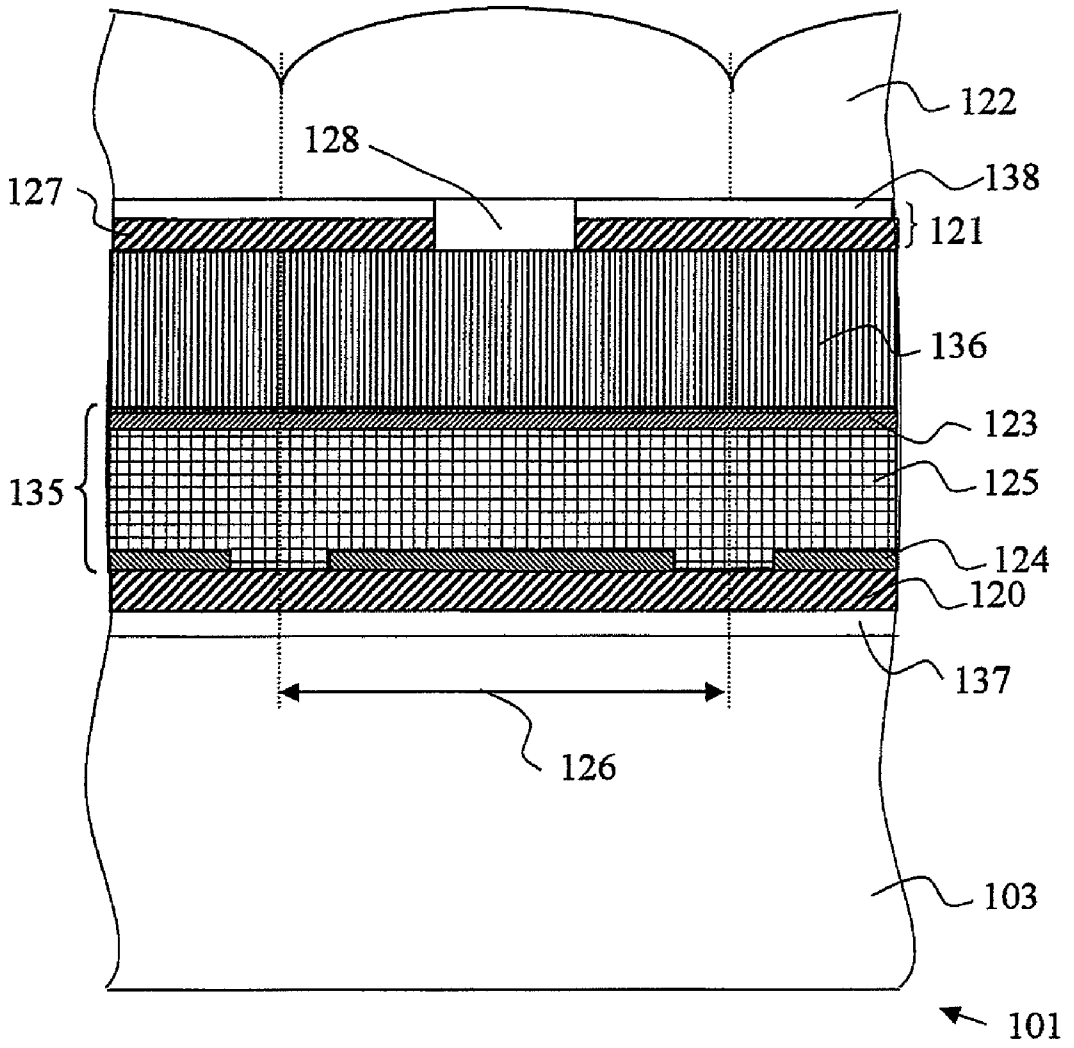

Fig.13

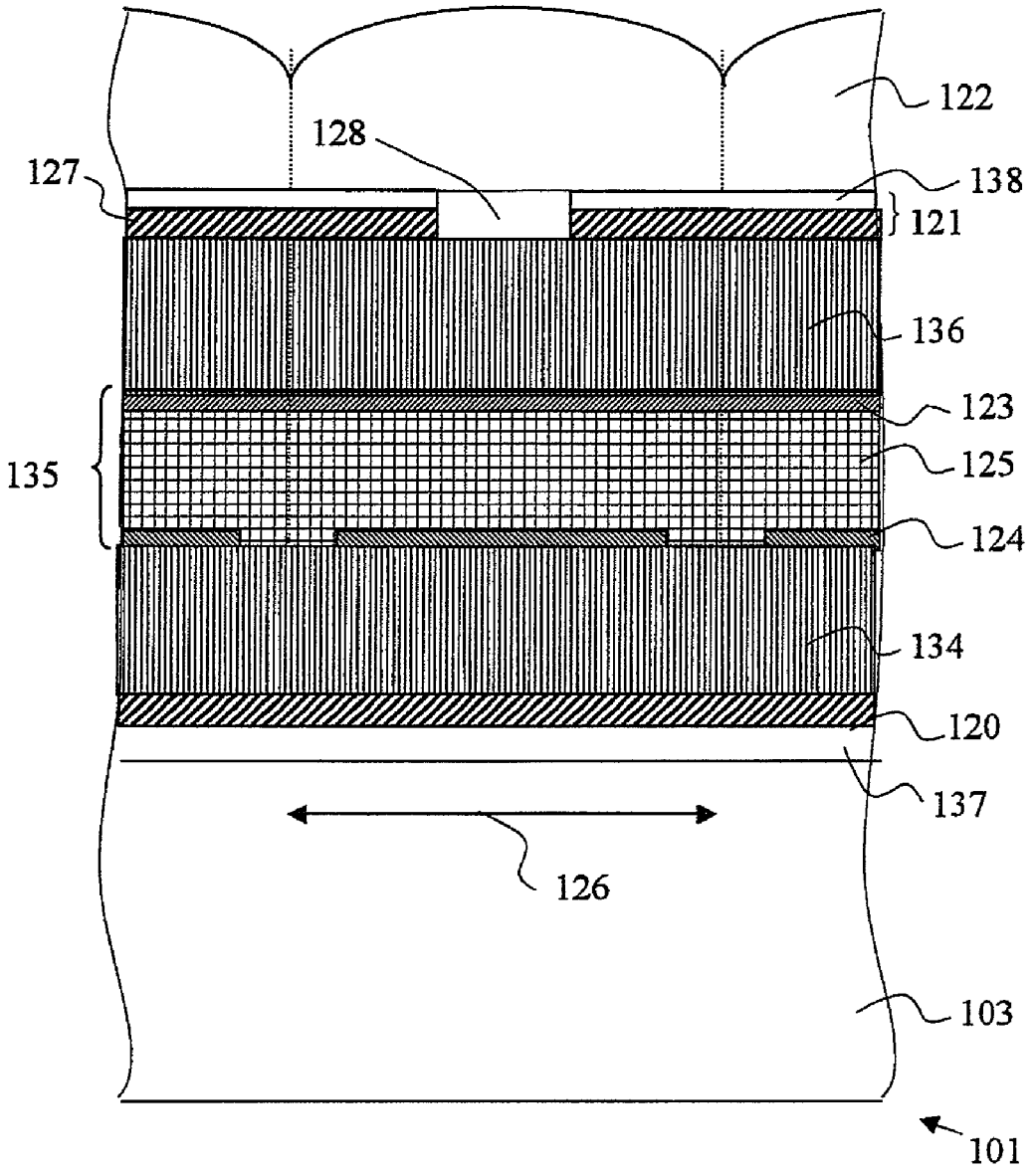

Fig.14

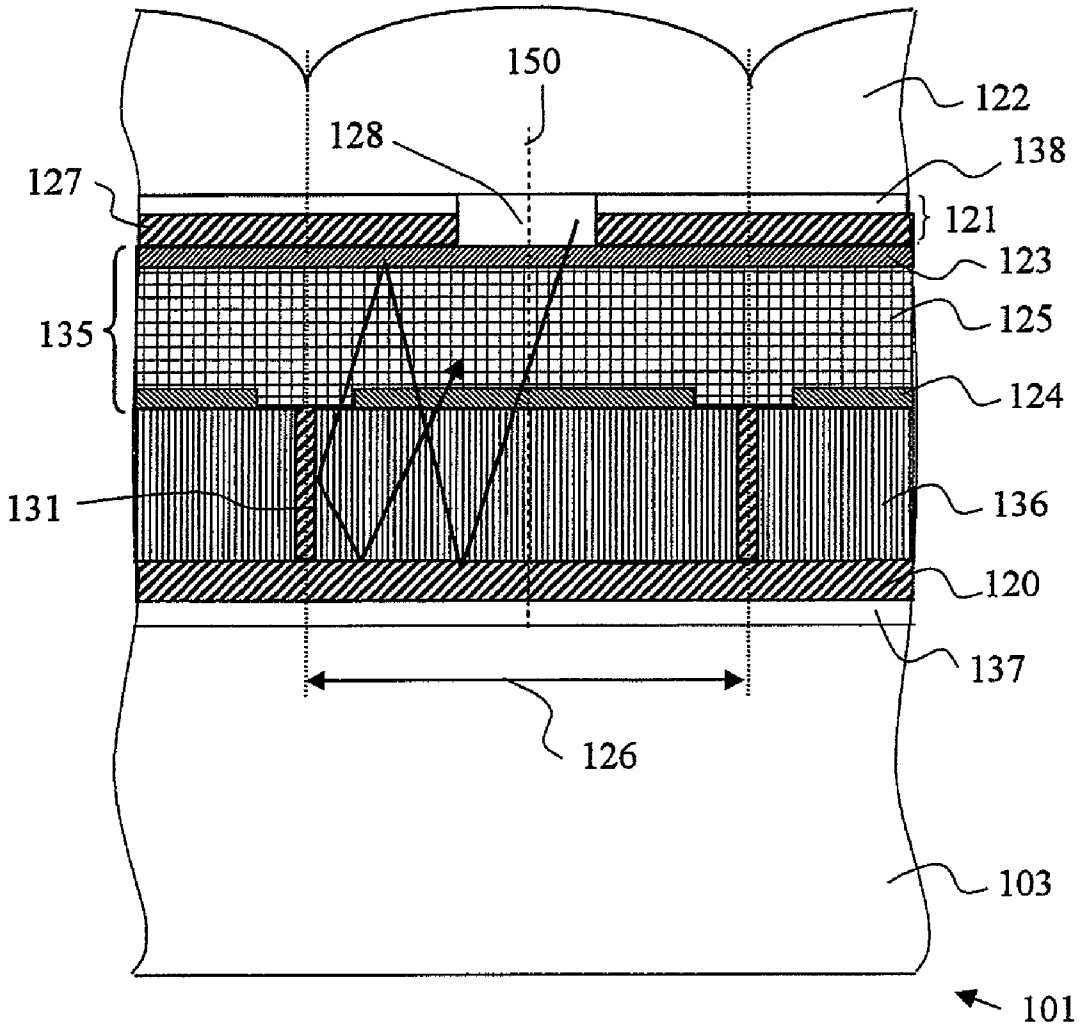
150
122
128
138
127
121
123
135
125
124
131
136
120
137
126
103
101

Fig.15

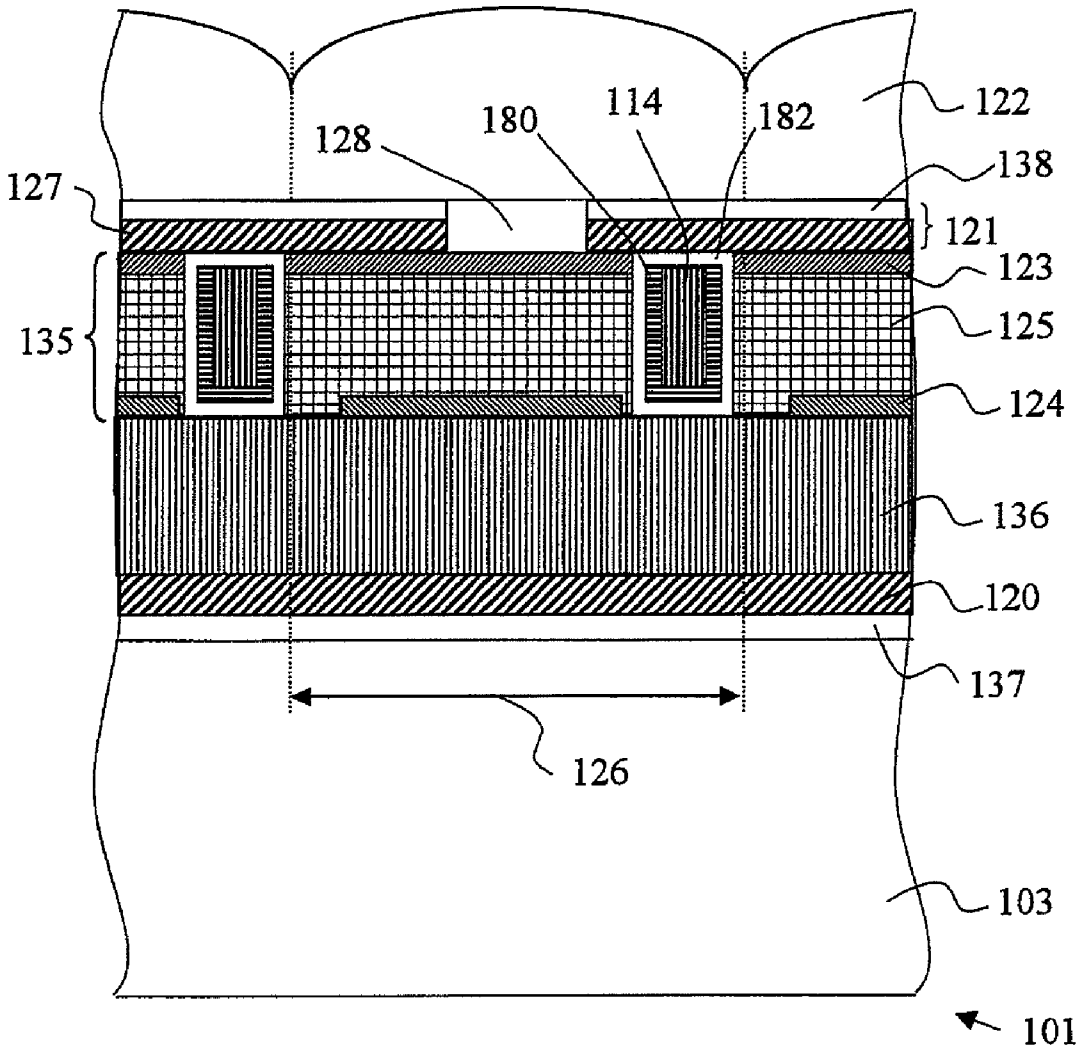
122
114
180
182
128
138
127
121
123
135
125
124
136
120
137
126
103
101

Fig.16

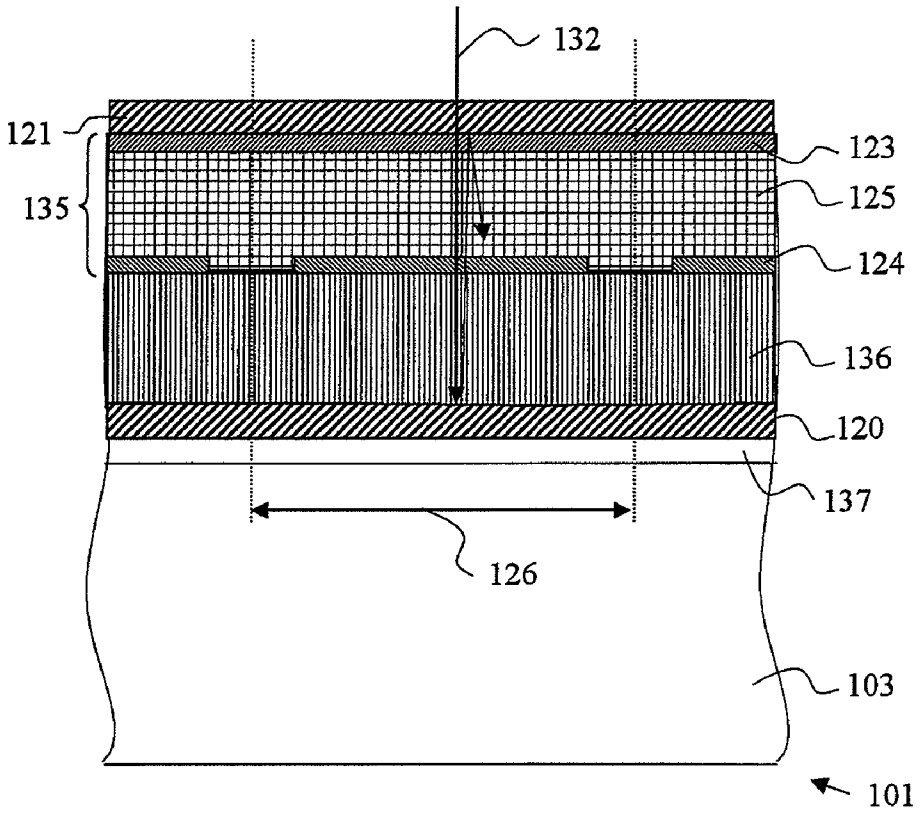
132
121
123
135
125
124
136
120
137
126
103
101

Fig.17

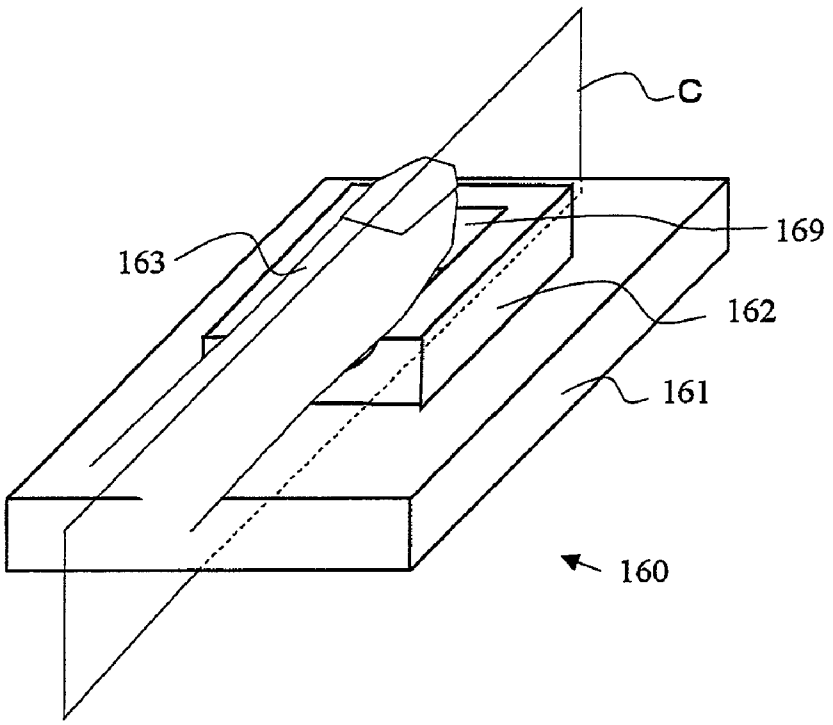
C
169
163
162
161
160

Fig.18

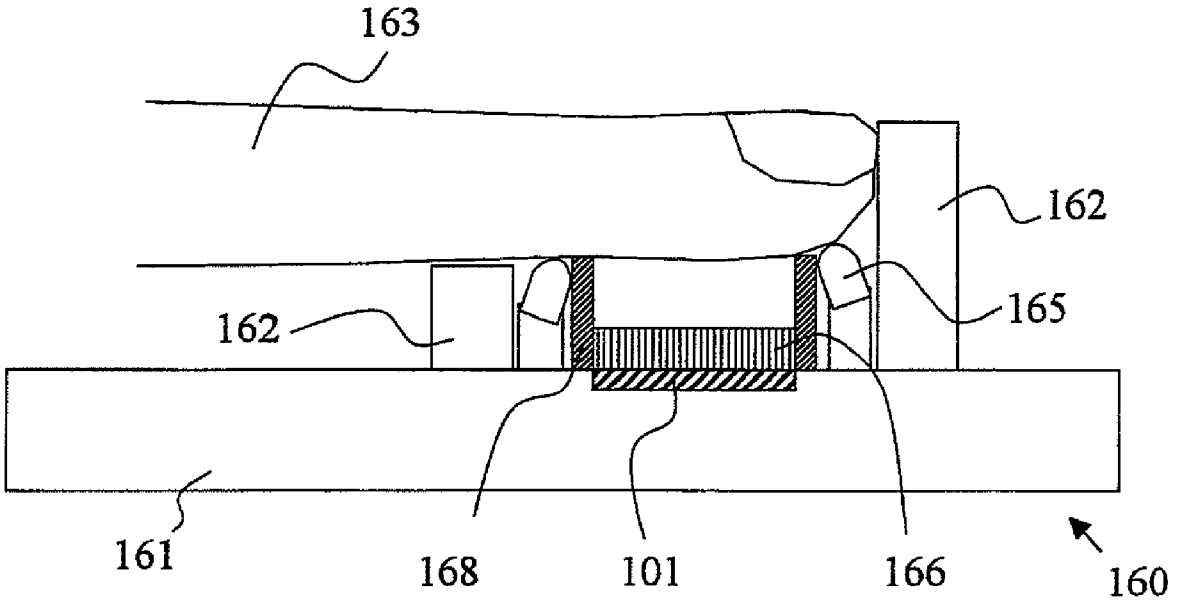

Fig.19

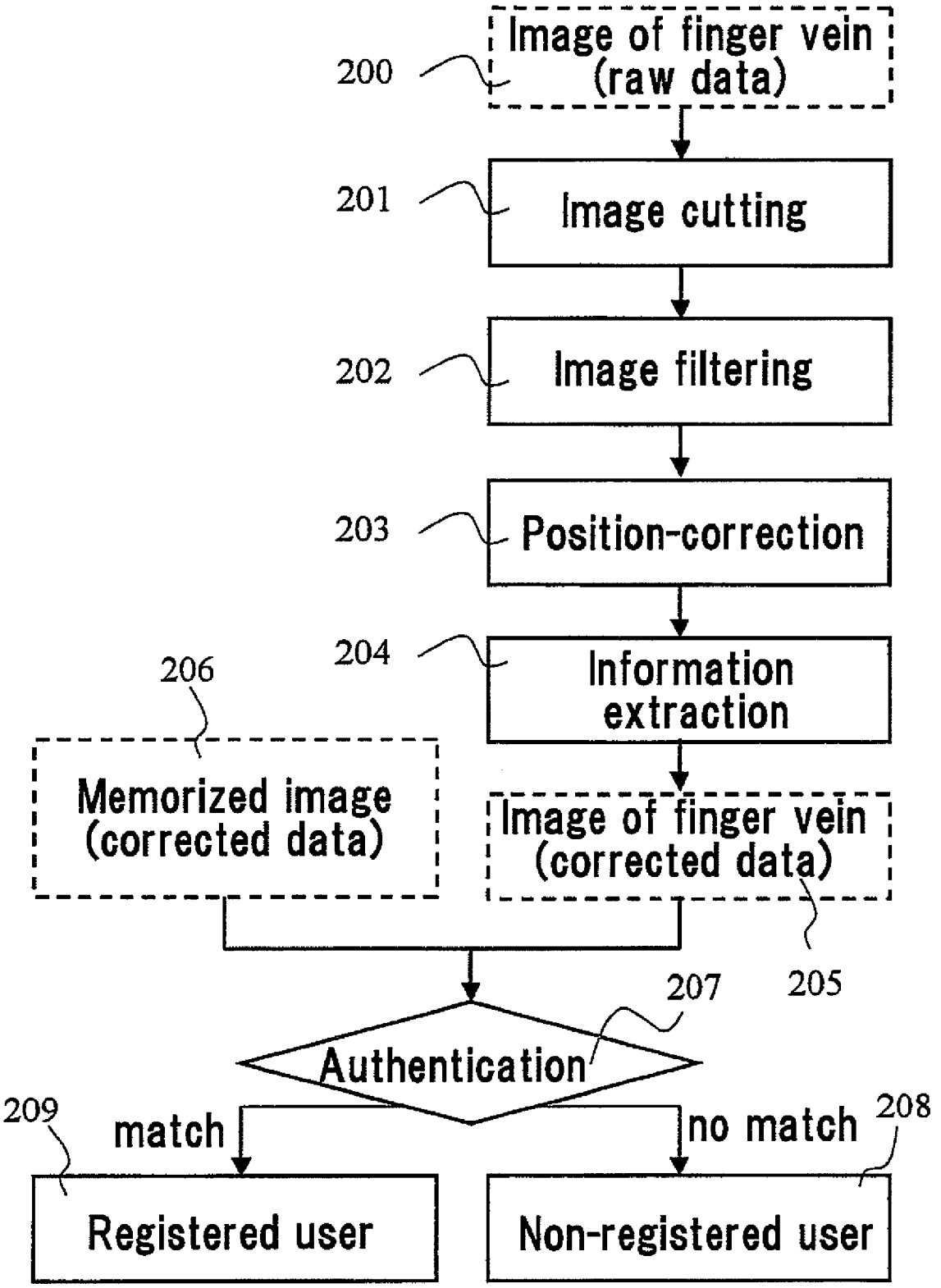
Image of finger vein (raw data)
200
Image cutting
201
Image filtering
202
Position-correction
203
Information extraction
204
206
Memorized image (corrected data)
Image of finger vein (corrected data)
205
207
Authentication
match
no match
209
208
Registered user
Non-registered user

Fig.20

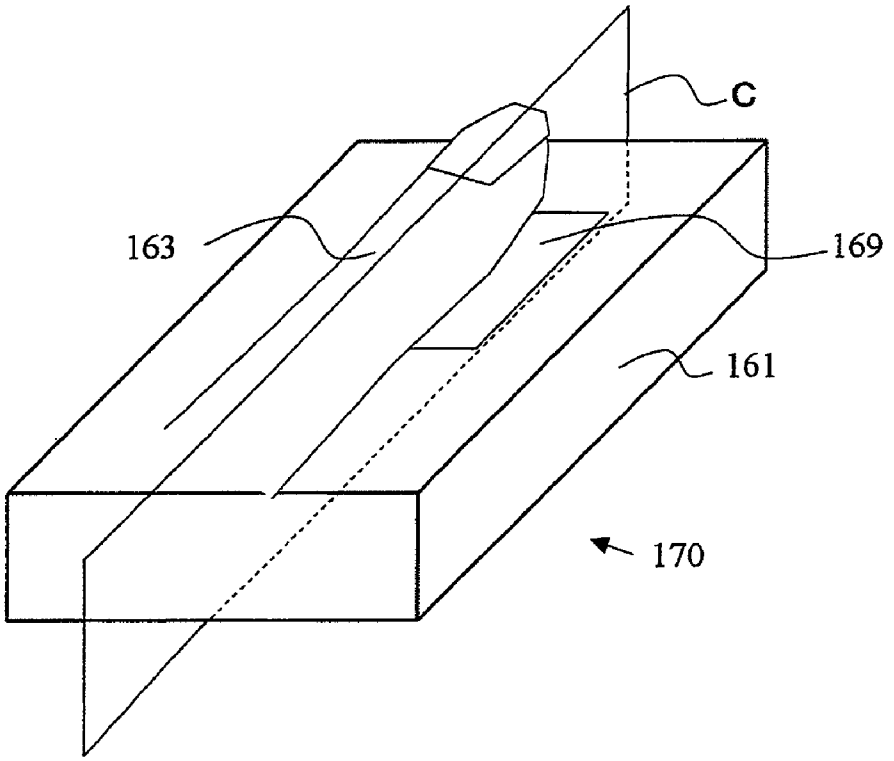

Fig.21

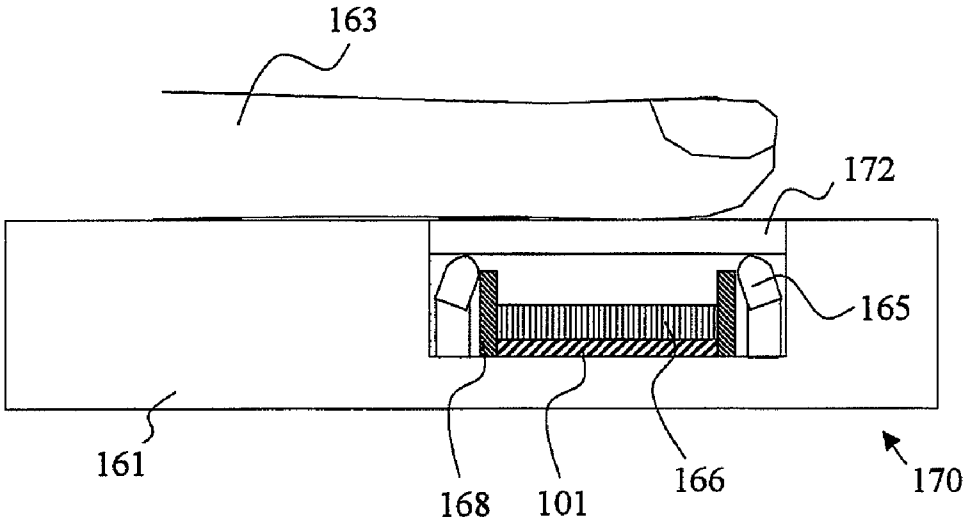

Fig.22

Structure 1

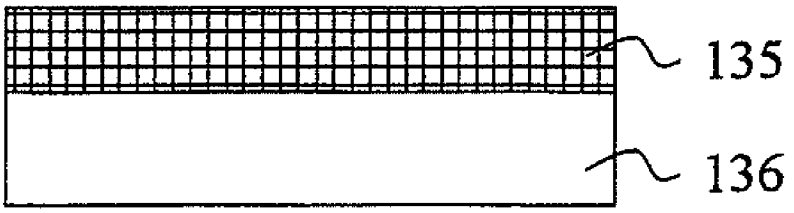

Structure 2

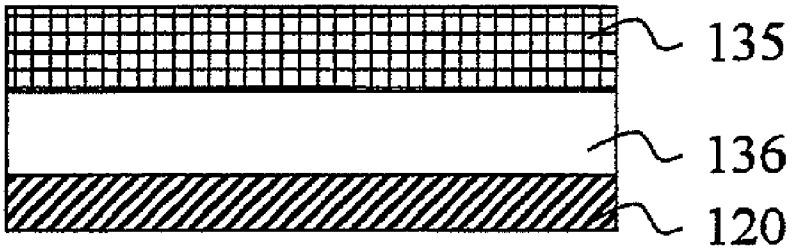

Structure 3

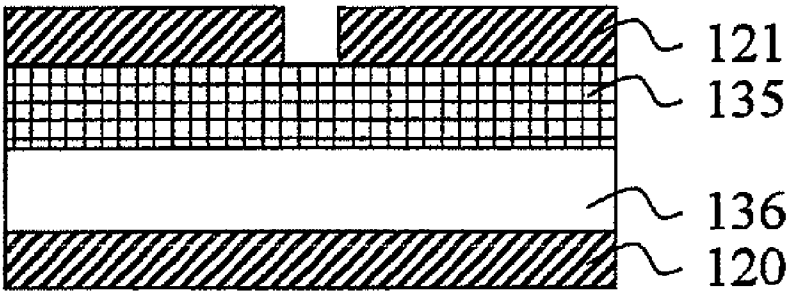

Fig.23

SOLID-STATE IMAGING ELEMENT, PHOTO-DETECTOR AND AUTHENTICATION SYSTEM USING THE PHOTO-DETECTOR

CLAIM OF PRIORITY

The present application claims priority from Japanese application JP2006-338489 filed on Dec. 15, 2006, the content of which is hereby incorporated by reference into this application.

BACKGROUND OF THE INVENTION

1. Technical Field

The present invention relates to a photoelectric conversion element formed with a thin film of a photoelectric absorption material such as polysilicon film or amorphous silicon film, a solid-state imaging element or detector such as image sensor, solar cell and X-ray flat panel sensor, and a system such as liquid crystal display, biometric personal authentication system, photovoltaic power generation system, X-ray imaging system and digital camera using the same.

2. Background Art

In photo-detectors for visible light, crystalline silicon has mainly been used so far to date. However, use of thin-film sensors using amorphous silicon or polysilicon is spreading in recent years.

Amorphous silicon films are also used in, besides photo-detectors, solar cells, X-ray flat panels and so forth. They can be formed as a semiconductor layer only for a necessary part on a substrate, which is formed with a relatively inexpensive material such as glass and plastics. It is easy to obtain such films of larger area, and the manufacturing process thereof is also relatively easy. Therefore, they have an advantage that they can be made more inexpensive compared with those consisting of single crystal or polycrystal silicon. However, they have a problem that the detection efficiency and efficiency for conversion into electric signals are lower than those of crystalline silicon. Moreover, crystalline silicon shows the peak sensitivity at a wavelength of around 800 nm in the near-infrared region and shows sensitivity up to around 1100 nm, whereas amorphous silicon shows the peak sensitivity at around 600 nm. Therefore, amorphous silicon shows low sensitivity especially for light of the near-infrared region. Accordingly, such a characteristic poses a problem when amorphous silicon is used for a photo-detector for that wavelength.

If it is attempted to solve this problem by using a thicker amorphous silicon, a high technical level is required to uniformly form a thick film, and in addition, there arise problems such as degradation of the production yield, longer lamination time and more serious difficulty in forming finer patterns, which may result in factors of higher cost.

On the other hand, polysilicon is widely used in liquid crystal displays using pixel thin film transistors. Furthermore, photo-detectors incorporated into liquid crystal displays and so forth have been developed in recent years. Such use of polysilicon as described above have an advantage that a photo-detector can be loaded together on other systems such as liquid crystal displays to make it possible to use common peripheral circuits for them, and a circuit such as amplifier can be incorporated into a sensor. However, polysilicon films have a problem that they show the peak sensitivity around the blue light region of a wavelength of 450 to 500 nm, and scarcely show sensitivity for light of from the red region to the near-infrared region. This is especially because of the thin film thickness. Polysilicon films are usually obtained by melting and solidifying amorphous films with irradiation of excimer laser light, and thickness of amorphous silicon film is limited to the thickness through which excimer laser light can penetrate. The upper limit is about 50 nm as described in, for example, Patent document 3.

As an effective method for improving detection sensitivity of these materials suffering from a limitation on use of thicker films, there is a method of returning photons not absorbed by a semiconductor layer to the semiconductor layer again by reflection with a reflecting layer provided on the side opposite to the photon incidence side to make them to be absorbed by the semiconductor layer, and a method for manufacturing an efficient reflecting layer is proposed in Patent document 1. Moreover, in order to realize unevenness of 100 nm or more effective for reflecting photons for a reflecting layer, Patent document 2 proposes a structure in which a transparent substrate is provided between a photoelectric conversion film and a reflecting layer.

Furthermore, Patent document 3 proposes a method of forming a photoelectric conversion film made of polysilicon in a concavo-convex shape so that photons should enter obliquely to cause multiple scattering in the photoelectric conversion film and thereby improve the sensitivity for visible light.

[Patent document 1] Japanese Patent Unexamined Publication (KOKAI) No. 2001-100389

[Patent document 2] Japanese Patent Unexamined Publication (KOKAI) No. 5-218469

[Patent document 3] Japanese Patent Unexamined Publication (KOKAI) No. 2004-247686

DISCLOSURE OF THE INVENTION

Summary of the Invention

However, with the structures of Patent documents 1 and 2 mentioned above, there is a case where the improvement in detection sensitivity cannot be considered sufficient. Moreover, by the method described in Patent document 3, multiple scattering can be caused only for a small part of photons in the photoelectric conversion film, and there is a case where the improvement in detection sensitivity cannot be considered sufficient.

As described above, the conventional methods have a limitation in obtaining higher sensitivity.

The present invention solves the aforementioned problem by employing, in a solid-state imaging element, a structure where reflecting layers are provided on both sides of a photoelectric conversion means, and light (photons) is efficiently entered into the photoelectric conversion means, and further employing a structure where light (photons) that entered between the two reflecting layers does not flow outside.

That is, the solid-state imaging element of the present invention comprises a photoelectric conversion means which generates electric charges upon incidence of photons, a layer substantially transparent for incident photons, a first reflecting layer and a second reflecting layer which reflect incident photons, and has a structure where the first reflecting layer and the second reflecting layer sandwich the photoelectric conversion means together with the transparent layer, and the incident photons are reflected once or more times by each of the first reflecting layer and the second reflecting layer to be introduced into the photoelectric conversion means a plurality of times.

The solid-state imaging element of the present invention comprises, for example, a photoelectric conversion layer which generates electric charges upon incidence of photons, a substantially transparent first electrode which is disposed on the photoelectric conversion layer on the photon incidence side, a substantially transparent second electrode which is disposed on the photoelectric conversion layer on the side opposite to the photon incidence side to face the first electrode and detects electric charges generated by the photoelectric conversion layer, a first reflecting layer which is disposed in contact with the first electrode on the photon incidence side and has a reflecting surface as the surface in contact with the first electrode, a second reflecting layer which is disposed on the second electrode on the side opposite to the photon incidence side and has a reflecting surface as the surface facing the second electrode, and a transparent layer or layers disposed between the first electrode and the first reflecting layer and/or between the second electrode and the second reflecting layer.

In a photo-detector comprising a plurality of the aforementioned solid-state imaging elements, photons can reciprocate between the first reflecting layer and the second reflecting layer many times. Thus, the photons can be introduced into the photoelectric conversion layer three times or more, and therefore the detection efficiency and the sensitivity of the detector or the element can be improved compared with conventional detectors or elements in which photons are introduced into the photoelectric conversion layer two times or less.

In the solid-state imaging element of the present invention, as a structure for efficiently introducing photons into the photoelectric conversion means, for example, the first reflecting layer may have a light entrance window which transmits incident photons. Further, the first reflecting layer may have a concentration means for concentrating incident photons to the light entrance window on the photon incidence side.

With these structures, photons can be introduced into the element via the light entrance window, and photons which entered into the first reflecting layer among photons reflected within the element can be reintroduced into the photoelectric conversion means. Therefore, undetectable photons can be reduced, and improvement in the detection efficiency can be realized.

Furthermore, in the solid-state imaging element provided with such a light entrance window, the first reflecting layer may also serve as one of the electrodes of the photoelectric conversion means. Absorption of photons by the electrodes of the photoelectric conversion means when the photons pass through them can be thereby suppressed, and improvement in the detection efficiency for photons can be realized.

Further, in the solid-state imaging element of the present invention, for example, at least one of the first reflecting layer and the second reflecting layer may consist of a conducting material and may be connected to a predetermined electric potential. External noises can be thereby prevented from entering into the solid-state imaging element to generate noises.

Further, by providing a transparent layer in the solid-state imaging element of the present invention, convexes or concaves or a structure effective for reflecting or scattering photons can be realized in the reflecting layer adjacent to the transparent layer. Specifically, at least a part of the reflecting surface of the second reflecting layer may have a concavo-convex or inclined surface. The concavo-convex surface of the second reflecting layer may have, for example, a sectional shape comprising multiple triangles. Alternatively, the reflecting layer may have a convex or concave having a sectional shape of isosceles triangle, of which apex locates on a perpendicular passing the center of the light entrance window.

With such a structure of the second reflecting layer as described above, such a design becomes possible that, for example, photons should be reflected by the second reflecting layer only to the reflecting surface of the first reflecting layer while avoiding the light entrance window, and thus it becomes possible to suppress escape of photons from the light entrance window. Moreover, a similar structure may also be provided for the first reflecting layer, or both the first reflecting layer and the second reflecting layer to realize the same effect. Furthermore, in a photo-detector comprising a plurality of the solid-state imaging element provided with such structures, a design for suppressing cross-talk to the adjacent solid-state imaging element becomes possible.

Further, in the solid-state imaging element of the present invention, for example, the center of the light entrance window may deviate from the center of the solid-state imaging element. The degree of freedom of design concerning the photon detection region in the photoelectric conversion means, prevention of escape of photons to the outside of the solid-state imaging element or the like can be thereby increased.

Furthermore, in the solid-state imaging element provided with such a light entrance window as described above, the first reflecting layer may have a section separated into a first region and a second region narrower than the first region by the light entrance window, and a concavo-convex or inclined surface may be formed for the second reflecting layer so that incident photons should be mainly reflected to the first region. The number of times of reflection of photons by the first reflecting layer and the second reflecting layer in the solid-state imaging element can be thereby increased to improve the detection efficiency of photons.

The photo-detector of the present invention is a photo-detector comprising a plurality of the solid-state imaging elements of the present invention described above in an array. The photo-detector of the present invention comprises, for example, a substrate, an array formed on the substrate and comprising a plurality of solid-state imaging elements, and a drive circuit for driving a plurality of the solid-state imaging elements, and having a structure where a second electrode, a photoelectric conversion layer and a first electrode are disposed in this order from the substrate side in the plurality of the solid-state imaging elements, and the plurality of the solid-state imaging elements are electrically connected at the first electrode or the second electrode, wherein a second reflecting layer having a reflecting surface as the surface facing the array is formed between the substrate and the second electrode in the array, a first reflecting layer having a light entrance window which transmits incident photons and a reflecting surface as the surface facing the array is disposed on the first electrode in the array, and a transparent layer which transmits photons is disposed between the first electrode and the first reflecting layer in the array and/or between the second electrode and the second reflecting layer in the array.

Alternatively, the photo-detector of the present invention comprises a substrate, an array formed on the substrate and comprising a plurality of solid-state imaging elements, and a drive circuit for driving a plurality of the solid-state imaging elements, and having a structure where a second electrode, a photoelectric conversion layer and a first electrode are disposed in this order from the substrate side in a plurality of the solid-state imaging elements, and a plurality of the solid-state imaging elements are electrically connected at the first elec-

trode or the second electrode, wherein the substrate consists of a material which transmits photons, and has a second reflecting layer having a reflecting surface as the surface facing the array on the surface opposite to the surface on which the array is formed, a first reflecting layer having a reflecting surface as the surface facing the array is disposed on the first electrode in the array, and the first reflecting layer or the second reflecting layer is provided with a light entrance window which transmits incident photons.

Since each solid-state imaging element of the photo-detector of the present invention has a structure in which the transparent layer and the photoelectric conversion layer are disposed between the first reflecting layer and the second reflecting layer, photons which entered into the element can be kept for a long period of time between the first reflecting layer and the second reflecting layer, and therefore high detection efficiency can be obtained.

In particular, by providing a structure in which the transparent layer of each solid-state imaging element has a third reflecting layer which reflects photons and/or a shading layer which shades photons between the transparent layer and the transparent layer of the adjacent solid-state imaging element, it becomes possible to return photons which go to the adjacent element to the element, and thereby reduction of cross-talk to the adjacent element and improvement of the detection efficiency can be realized.

Further, by employing a structure in which a switch for on-off switching provided in each solid-state imaging element is disposed at a shaded position of the first reflecting layer at which the light entrance window is not formed, or a structure in which the switch is provided with a fourth reflecting layer which reflects photons and/or a shading layer which shades photons, precision of electric signals can be improved without generating error signals and noises, which are generated by incidence of photons on the switch. Furthermore, in this photo-detector, the provision of the switch enables reading of signals from the elements by one read-out circuit with changing the element to be read, and thus the circuit scale can be made small.

The personal authentication system of the present invention is provided with a light source which emits light having a wavelength of from visible to near-infrared region, a photo-detector which detects photons irradiated on an object from the light source and undergone at least one of reflection, transmission and internal scattering, a read-out circuit which reads signals from the photo-detector to form a digital image of biological information of the object, a memory means for storing biological information of the object beforehand, and an authentication means for performing signal processing for the digital image created by the read-out circuit to extract information and comparing the extracted information with the biological information stored by the memory means to attain personal authentication. As the photo-detector, the photo-detector of the present invention is used.

The personal authentication system of the present invention may be, for example, a personal authentication system using vein pattern for performing personal authentication on the basis of at least one of vain patterns of finger, palm of the hand and back of the hand. Further, it may also be, for example, a personal authentication system using fingerprint for performing personal authentication on the basis of fingerprint.

According to the present invention, detection sensitivity of a solid-state imaging element in which the photoelectric conversion film is manufactured with, for example, polysilicon or amorphous silicon can be improved. Moreover, in a photo-detector provided with a plurality of the solid-state imaging elements, detection efficiency for visible light or near-infrared light can be improved, and cross-talk between pixels can be reduced, which becomes more serious when higher sensitivity is desired. Furthermore, a highly precise personal authentication system comprising the solid-state imaging elements or the photo-detector can be provided.

BRIEF DESCRIPTION OF THE DRAWINGS

FIG. **1** shows an example of a photo-detector to which the present invention is applied.

FIG. **2** shows a circuit configuration of the photo-detector of FIG. **1**.

FIG. **3** shows the photo-detector of the first embodiment, and is a sectional view along the sectional line A in FIG. **1**.

FIG. **4** is an explanatory view for explaining the effect of the transparent film **136** in the first embodiment.

FIG. **5** is an explanatory view for explaining an example of the manufacturing steps of the photo-detector of the first embodiment.

FIG. **6** is an explanatory view for explaining a photo-detector which can be applied to the first embodiment and has a structure different from that of FIG. **3**.

FIG. **7** is a sectional view of the photo-detector for explaining the design of the concavo-convex shape of the reflecting layer **121** in the second embodiment.

FIG. **8** is a sectional view of the photo-detector of the third embodiment.

FIG. **9** is a sectional view of the photo-detector of the fourth embodiment.

FIG. **10** is a sectional view of the photo-detector of the fifth embodiment.

FIG. **11** is a sectional view of the photo-detector of the sixth embodiment

FIG. **12** is a sectional view of the photo-detector of the seventh embodiment.

FIG. **13** is a sectional view of the photo-detector of the eighth embodiment.

FIG. **14** is a sectional view of the photo-detector of the ninth embodiment.

FIG. **15** is a sectional view of the photo-detector of the tenth embodiment.

FIG. **16** shows the photo-detector of the eleventh embodiment, and is a sectional view thereof along the sectional line B in FIG. **1**.

FIG. **17** is a sectional view of the photo-detector of the twelfth embodiment.

FIG. **18** shows an external view of an embodiment of the personal authentication system of the present invention.

FIG. **19** is a sectional view of the personal authentication system using finger vein pattern of FIG. **18** along the sectional line C.

FIG. **20** shows flow of personal authentication performed in the personal authentication system using finger vein pattern of FIG. **18**.

FIG. **21** shows an external view of another embodiment of the personal authentication system of the present invention.

FIG. **22** is a sectional view of the personal authentication system using finger vein pattern of FIG. **21** along the sectional line C.

FIG. **23** shows the structures of the photoelectric conversion elements used for the example.

DESCRIPTION OF NOTATIONS

Description of the Preferred Embodiments

Hereafter, embodiments of the present invention will be explained. First, as an example of the photo-detector to which the present invention is applied, a photo-detector using thin-film silicon will be explained with reference to FIGS. **1** and **2**. FIG. **1** is a schematic view of the photo-detector, and FIG. **2** is a circuit diagram for explaining the circuit structure of the photo-detector.

As shown in FIG. **1**, the photo-detector **101** comprises a light-receiving means **102**, a substrate **103**, a read-out circuit **104**, a shift register **105**, control electrode pads **106** and output electrode pads **115**. The light-receiving means **102** consists of a plurality of solid-state imaging elements **110**, and each solid-state imaging element **110** is constituted by a photoelectric conversion part **113** and a switch **114** (in the drawing, the photoelectric conversion part **113** and the switch **114** are shown for only one solid-state imaging element as a representative). The configuration of the photo-detector shown in the drawing is an example of that of the photo-detector to which the present invention is applied, and the present invention is not limited to this configuration. Moreover, although relatively small numbers of solid-state imaging elements **110** and electrode pads **106** and **115** are shown in the drawing in order to simplify the explanation, the numbers of the solid-state imaging element **110** and the electrode pads **106** and **115** can also be various numbers.

The method for reading detection signals by using this photo-detector will be explained with reference to the circuit diagram of FIG. **2**. Light is irradiated on the light-receiving part **102**, converted into electric charge by the photoelectric conversion part **113**, and accumulated as the parasitic capacitance thereof. This electric charge is read by turning on the switch **114**, and a control signal for it is supplied from the shift register **105**. If an on-signal goes into the control electrode pad **106**, this shift register **105** turns on the switch **114** for every sequence connected with a control line **112**. Therefore, as for the electric charge of the elements **110** of the same line, read-out is performed simultaneously. The electric charge read as described above reaches the read-out circuit **104** via a signal wire **116**, and subjected to signal processing. In this read-out circuit **104**, the electric charge is first accumulated by an integrator **109**, and converted into a voltage signal. Then, the signal is sampled and held by an IC chip **108** for every sequence, and subjected to analog-to-digital conversion (A/D conversion). At this time, the A/D conversion is performed with changing the sequence one by one, and digital signals are outputted one by one from the output electrode pad **115**. Then, the shift register **105** performs the same processing for another read-out line to obtain a digital signal. By performing such reading for all the lines with changing the line, signals of all the solid-state imaging elements **110** of the light-receiving part **102** can be read out.

Although a case where the capacity of the photoelectric conversion part **113** consists only of the parasitic capacitance thereof is explained above, the present invention is not limited to such a case, and capacity may be separately provided. Further, although a case where the switch is provided for every element **110** and signals are read by changing this is explained above, the present invention is not limited to such a case, and there may be various read-out schemes or circuit configurations, for example, a case where electric charge is transferred such as in CCD (Charge Coupled Device), a case where every pixel is connected to the read-out circuit without providing switches, and so forth.

The present invention relates to a structure of the solid-state imaging element (photoelectric conversion element) **110** which constitutes the photo-detector explained above. Hereafter, embodiments of the solid-state imaging element **110** of the present invention will be explained.

First Embodiment

The structure of the solid-state imaging element **110** of the present invention according to the first embodiment is shown in FIG. **3**. FIG. **3** shows a sectional view of the solid-state imaging element shown in FIG. **1** along the sectional line A. In the drawing, the upper side is the side for receiving incident photons **132**, and width **126** is the width of one solid-state imaging element **110**. This solid-state imaging element **110** has a structure where a reflecting layer (second reflecting layer) **120**, a transparent layer **136**, a photoelectric conversion element **135**, a reflecting layer (first reflecting layer) **121** and a microlens **122** are formed on a substrate **103**, the second reflecting layer **120** and the first reflecting layer **121** sandwich the adjacent transparent layer **136** and photoelectric conversion element **135**, and further the microlens **122** is disposed on the first reflecting layer **121**.

Further, in the example shown in FIG. **3**, the reflecting layer **120** is adhered to the substrate **103** with adhesive **137**, and the microlens **122** is adhered to a reflecting surface **127** of the reflecting layer **121** with adhesive **138**.

The second reflecting layer **120** and the first reflecting layer **121** have a function of confining photons which entered into the solid-state imaging element **110** between the both, and the reflection parts which reflect photons are formed as the facing surfaces. The reflection parts consist of light reflective surfaces such as mirror surfaces, and specifically, they can be formed by forming a thin film of a metal such as aluminum and silver by deposition or the like. Alternatively, the reflecting layers **120** and **121** may be layers of a resin mixed with a white pigment. In addition, although higher reflectivity of the reflection means is more preferred, it is sufficient that they should have a reflectivity enabling reflection of 40% or more of incident photons, for example.

As for photon transmission rates of the photoelectric conversion element **135** and the transparent layer **136**, if the reflection rate of the first reflecting layer **121** is represented by R**1**, the reflection rate of the second reflecting layer **120** is represented by R**2**, and transmission rate of the photoelectric conversion element and the transparent layer for transmission of photons is represented by T, $T \times T \times R1 \times R2$ is preferably 0.1 or larger. By satisfying such a requirement, effective improvement in detection sensitivity can be realized. In particular, when escape of photons from the light entrance window can be ignored, the detection sensitivity can be improved 10% or more.

Further, the light entrance window **128** through which the incident photons **132** transmit is formed in the first reflecting layer **121**. It is sufficient that the light entrance window **128** should be substantially transparent, and it may be a hole (air), or may consist of a substantially transparent material. The term "substantially transparent" means to have, for example, a transmission rate of 50% or more. The light entrance window **128** may have various shapes. For example, it may be a slot along the direction perpendicular to the sectional line A indicated in FIG. **1**, or it may have a round shape or polygonal shape. The width (diameter) of the light entrance window **128** is appropriately determined on the basis of the relation to

width **126** of pixel, thickness of the transparent layer **136** to be explained later, and the like. For example, when the width **126** of pixel is 100 μm, it is 20 μm.

The microlens **122** is formed from convex lenses having a size suitable for the size of the solid-state imaging element **110** and arranged according to the sequence of the solid-state imaging elements **110**, and it concentrates photons which entered into the solid-state imaging element **110**, and leads them to the light entrance window **128**.

The photoelectric conversion element **135** has a structure where a photoelectric conversion film **125** is inserted between a common electrode **123** and a pixel electrode **124**, and it is disposed so that the common electrode **123** should be on the light-receiving side. The common electrode **123** and the pixel electrode **124** are formed from a substantially transparent material for the incident photons **132**, such as ITO (indium tin oxide), indium oxide (In_2O_3), tin oxide (SnO_2) and zinc oxide (ZnO) films, and it has, for example, a transmission rate of 50% or more. The materials constituting the common electrode **123** and the pixel electrode **124** may be the same or different, and transmission rates thereof may also be the same or different.

The photoelectric conversion film **125** consists of a polysilicon film or an amorphous silicon film. The film thickness thereof is, for example, 50 nm in the case of a polysilicon film. In the case of an amorphous silicon film, for example, it is 500 nm.

Photons which entered into the solid-state imaging element **110** from the light entrance window **128** pass through the transparent common electrode **123**, and reach the photoelectric conversion film **125**, and a part of them are absorbed and cause photoelectric conversion, resulting in accumulation of electric charge corresponding to the amount of photons absorbed by each pixel electrode **124**.

The transparent layer **136** is a layer which transmits photons, and is formed from a material which transmits photons, for example, glass and plastics such as acrylic resins. Further, instead of glass or plastics, only a space may be provided. That is, the transparent layer **136** may be a layer of air or vacuum. The transparent layer **136** preferably has a transmission rate of 50% or more.

By providing the transparent layer **136**, the solid angle for subtending the light entrance window **128** at the second reflecting layer **120** can be made smaller. The rate of photons escaping from the light entrance window **128** among the incident photons reflected by the second reflecting layer **120** can be thereby reduced, and it thus becomes possible to increase amount of photons reciprocating in a space between the second reflecting layer **120** and the first reflecting layer **121** including the photoelectric conversion element **135** (number of reciprocation).

The thickness of the transparent layer **136** is appropriately determined on the basis to the relation to the width **126** of pixel, the size of the light entrance window **128** mentioned above, and so forth. For example, when the width **126** of pixel is 100 μm and the width of the light entrance window **128** is 20 μm, it is 100 μm.

In the aforementioned configuration, photons **132** received by the solid-state imaging element **110** are concentrated by the microlens **122**, enter into the photoelectric conversion element **135** from the light entrance window **128** of the first reflecting layer **121**, pass through the transparent common electrode **123**, and reach the photoelectric conversion film **125**, and a part of them are absorbed by the film. The photons not absorbed by the photoelectric conversion film **125** transmit the pixel electrode **124** and the transparent layer **136**, and reach the second reflecting layer **120**. The photons are reflected by the mirror surface of the second reflecting layer **120**, pass through the transparent layer **136** again and reach the photoelectric conversion film **125**, and a part of them are absorbed by the film. Further, a part of the photons which passed through the photoelectric conversion film **125** reach the reflecting surface **127** of the first reflecting layer, are reflected again, and reach the photoelectric conversion film **125**, and a part of them are absorbed. Such reciprocation is repeated thereafter. Although a part of the photons escape from the light entrance window to the outside, and a part of them are absorbed by the members other than the photoelectric conversion film **125**, most of the photons can be absorbed with the photoelectric conversion film **125**.

During the photons which entered into the solid-state imaging element **110** are reciprocated between the second reflecting layer **120** and the first reflecting layer **121**, amount of reciprocating photons (number of reciprocation) can be increased by the presence of the transparent layer **136** which makes the solid angle for subtending the light entrance window **128** at a reflecting point on the second reflecting layer **120** smaller as described above. The effect of this transparent layer **136** will be explained in detail with reference to FIG. **4**.

As shown in FIG. **4**, in order that photons **132** which entered from the light entrance window **128** and were reflected by the reflecting layer **120** can reach the reflection part **127** without escaping from the light entrance window **128**, the reflection angle at the reflecting layer **120** must be larger than the angle β shown in FIG. **4**. That is, photons which entered from the light entrance window **128** with an angle larger than the angle β can be kept in the solid-state imaging element **110**, and a smaller angle β provides a higher ratio of photons kept in the solid-state imaging element **110**. The angle β is a solid angle for subtending the light entrance window at a reflection point, and if the width of the light entrance window **128** is represented by W, and the distance between the reflecting surface **127** of the first reflecting layer **121** and the second reflecting layer **120** is represented by D, it is represented as follows: $\beta=\tan^{-1}(W/2D)$. Therefore, smaller W or larger D provides a smaller value of β. If the width of the light entrance window **128** is relatively narrow with respect to the element width **126**, the amount of photons which enter into the element decreases. On the other hand, the photoelectric conversion element **135** is a thin film, and it is difficult to make it thicker. Therefore, in this embodiment, the transparent layer **136** is inserted to lengthen the distance D between the reflecting surface **127** of the first reflecting layer **121** and the second reflecting layer **120** and thereby make the visual angle small.

Specifically, when, for example, the width W of the light entrance window is 20 μm, the thickness D**1** of the photoelectric conversion element **135** is 50 nm, and the thickness D**2** of the transparent layer **136** is 100 μm, β is 5.7 degrees when there is the transparent layer **136**, whereas it is 89.7 degrees when there is not the transparent layer **136**. Therefore, when there is the transparent layer **136**, most of photons which enter with an incidence angle of 0 to 90 degrees reach the reflecting surface **127** of the reflecting layer **121** without escaping from the light entrance window **128**, and an opportunity is given to detect them again by the photoelectric conversion element **135**. On the other hand, when there is no transparent layer **136**, a major part of the incident photons escape from the light entrance window **128** to the outside, and those photons can no longer be detected. By providing the transparent layer **136** as described above, it becomes possible to confine more photons in the solid-state imaging element **110** and detect them.

If photons are introduced into the photoelectric conversion film **125** and absorbed thereby multiple times, pairs of elec-

tron and hole are generated in the photoelectric conversion film **125**. Since this electric charge is dependent on the amount of incident photons, distribution of incident photon amounts can be imaged by reading the charge from the common electrode **123** and the pixel electrode **124** for every element **101**.

An example of the manufacturing method of the photo-detector **101** will be explained below with reference to FIG. **5**. However, the manufacturing method of the photo-detector **101** of this embodiment is not limited to this method.

First, as shown in Step **1** of FIG. **5**, a glass plate or a plastic plate is used as the transparent layer **136**, and the pixel electrode **124** is provided thereon. This pixel electrode **124** is transparent for incident photons, and consists of, for example, ITO, tin oxide, zinc oxide or the like. When ITO is used, it is manufactured by, for example, the electron-beam deposition method, the DC magnetron sputtering method or the like. When tin oxide is used, it is manufactured by, for example, the electron beam deposition method, the RF magnetron sputtering method, the DC magnetron sputtering method, the spray method, the chemical vapor deposition (CVD) method or the like. When zinc oxide is used, it is manufactured by, for example, the sol-gel method, the spray pyrolysis method, the electroless plating method, the RF magnetron sputtering method, the DC magnetron sputtering method, the CVD method, the metal-organic chemical vapor deposition (MOCVD) method, the reactive evaporation method, the pulsed laser deposition method or the like.

Then, as Step **2**, the photoelectric conversion film **125** is formed thereon. This photoelectric conversion film **125** is manufactured by, for example, when polysilicon is used, the laser annealing method, the solid-phase crystallization method, the CVD method or the like. When amorphous silicon is used, it is manufactured by, for example, the glow-discharge method, the reactive sputtering method, the ion-plating method, the ionized cluster beam method or the like.

Then, in Step **3**, the common electrode **123** is manufactured in the same manner as that for the pixel electrode **124**. Although not shown in the steps shown in FIG. **5**, a step for producing the switch **114** is performed during a period after starting Step **1** and before performing Step **4**.

Then, in Step **4**, the first reflecting layer **121** is formed. The reflecting layer **121** is manufactured by forming a film with a metal such as aluminum or silver by, for example, the deposition method. In this step, by covering a portion corresponding to the light entrance window **128** with a mask or the like, and removing the mask after the film formation, the light entrance window **128** is formed. Then, in Step **5**, the second reflecting layer **120** is manufactured on a surface of the transparent layer **136** shown as the lower surface in the drawing. The second reflecting layer **120** can be manufactured in the same manner as that for the first reflecting layer **121**. Then, in Step **6**, the laminate obtained in Step **5** is adhered to the substrate **103** with adhesive **137**, and in Step **7**, the microlens **122** is adhered with adhesives **138** concentrically with the light entrance window **128**. The photo-detector **101** thus can be manufactured.

According to this embodiment, by using a structure where the photoelectric conversion element **135** is inserted between the first and second reflecting layers **121** and **120**, and providing the light entrance window **128** in the first reflecting layer **121** disposed on the photon incidence side and the transparent layer **136** of a predetermined thickness between the second reflecting layer **120** disposed on the opposite side and the photoelectric conversion element **135**, photons which entered from the light entrance window **128** can be effectively confined between the first and second reflecting layers **121** and **120** to increase the amount of photons participating in photoelectric conversion by the photoelectric conversion element **135** and thereby improve the detection sensitivity.

Further, a concentration means such as the microlens **131** disposed on the photon incidence side of the light entrance window **128** enables concentration of more photons to the light entrance window **128**. Although the microlens **131** is used as the concentration means in the embodiment shown in the drawings, the present invention is not limited to this, and the concentration may be attained by using other optical lenses, grid or optical fiber. Further, structures not comprising any concentration means are also fall within the scope of the present invention.

While the photo-detector of this embodiment is explained above, the materials and the structures mentioned in the aforementioned explanation are examples for the photo-detector of this embodiment, and various modifications are possible. For example, although a configuration that the second reflecting layer **120** and the transparent layer **136** are formed between the substrate **103** and the photoelectric conversion element **135** is shown in the drawings, it is also possible to employ a structure where the substrate **103** and the adhesive **137** mentioned in FIG. **3** are omitted, and the transparent layer **136** also serves as the substrate **103** which supports the photo-detector. In this case, the substrate **103** is constituted by a material which transmits photons, the photoelectric conversion element **135** is provided on one side of the substrate, and the second reflecting layer **120** is provided on the other side.

Further, in the aforementioned explanation, when the reflecting layers **120** and **121** consist of metals, it is also possible to electrically connect at least one of these to ground or electrode potential of a read-out circuit, a control circuit, a power supply or the like. By using such a structure, error signals and noises generated in output signals of the photo-detector **101** by external noises which flow in from the outside and flow into the photo-detector **101** and detected in the photoelectric conversion element **135**, wiring or the like can be thereby reduced.

Further, in the aforementioned explanation, the first reflecting layer **121** and the common electrode **123** were separately provided. However, such a configuration is an example of the photo-detector of this embodiment, and the first reflecting layer **121** and the common electrode **123** may be integrated. In such a case, for example, the common electrode **123** is manufactured from a metal such as aluminum and silver, which is a material reflecting photons and previously described as the material of the first reflecting layer **121**. Furthermore, the common electrode **123** has the light entrance window **128**, and photons are entered into the photoelectric conversion element **135** from here. At this time, the photons can directly reach photoelectric conversion layer **125** without passing through any electrode, and therefore there is no attenuation by the first reflecting layer **121**. On the other hand, even if the common electrode **123** is manufactured with a transparent electrode, for example, with ITO, transmission rate does not reach 100%. Therefore, integration of the first reflecting layer **121** and the common electrode **123** enables improvement in the detection efficiency.

Further, in the aforementioned explanation, the photoelectric conversion element **135** has a structure where the common electrode **123** and the pixel electrode **124** face each other. However, this is an example of the structure of the photo-detector of this embodiment, and the common electrode **123** and the pixel electrode **124** may be on the same plane as shown in FIG. **6**. The photoelectric conversion element **135** shown in FIG. **6** consists of the photoelectric conversion layer **125** provided for every element **101** and an insulation layer

133 which electrically insulates the layers, and the common electrode **123** and the pixel electrode **124** are electrically connected to the right and left ends of the photoelectric conversion layer **125**, respectively. The photoelectric conversion element of such a structure has a structure where photons which come along the vertical direction are detected by the photoelectric conversion layer **125**, and electrons and holes generated thereby are moved along the horizontal direction for reading. The photoelectric conversion layer **125** is manufactured from, for example, amorphous silicon, and the insulation layer **133** is manufactured from, for example, silicon oxide.

Also in such a photoelectric conversion element **135**, the effect similar to that mentioned above can be realized by employing the structure where the photoelectric conversion layer **125** is sandwiched together with the transparent layer **136** between the first reflecting layer **121** and the second reflecting layer **120**.

Further, in the aforementioned explanation, read-out of the quantity of the electric charge generated between the photoelectric conversion elements **135** is attained by the structure where the same charge quantity is generated by an integrator **109**. However, this is an example of the structure of the photo-detector of this embodiment, and there may be various structures. For example, a voltage conversion means which generates a voltage signal according to charge quantity may be provided for every pixel, and a voltage signal produced by this may be read. Further, for example, an electric charge amplifier which amplifies charge quantity may be provided, and the thus amplified charge quantity may be read.

Further, in the aforementioned explanation, there is used the structure where the common electrode **123** is adjacent to the first reflecting layer **121**. However, this is a mere example of the structure of the photo-detector of this embodiment, and a structure where the pixel electrode **124** is adjacent to the first reflecting layer **121** may of course be also used.

Further, a case where the reflecting layer **121** has a flat mirror surface is explained for this embodiment. However, various modifications are possible. In order to prevent the incident photons reflected by the reflecting layer **121** from escaping from the light entrance window **128**, a flat profile may not be used for the reflecting layer **121**. For example, inclination may be provided, unevenness may be provided, or convexes and concaves may be provided. Hereafter, embodiments using different profiles of the reflecting layer **121** will be explained as the second to sixth embodiments.

Second Embodiment

The photo-detector of the present invention according to the second embodiment will be explained with reference to FIG. **7**. In FIG. **7**, the same elements as those of the first embodiment are indicated with the same symbols (the same shall apply to the following drawings).

In the photo-detector of this embodiment, the shape of the second reflecting layer **120** differs from that of the second reflecting layer **120** of the first embodiment. The other configurations are the same as those of the first embodiment. That is, the second reflecting layer **120** of this embodiment has a plurality of convexes and concaves on the reflecting surface as shown in FIG. **7**. When it reflects the incident photons **132**, it can thereby reflect them with a large amount of horizontal components, in other words, it can reflect them with a large reflection angle. This makes it possible to reflect photons which entered from the light entrance window **128** to the first reflecting layer **121**, and therefore the amount of photons to be detected again by the photoelectric conversion film **125** can be increased.

The convexes and concaves of the reflecting surface for efficiently reflecting the photons which entered from the light entrance window **128** to the first reflecting layer **121** will be explained. Here, in order to simplify the explanation, it is assumed that there shall be no refraction of light at interfaces of the layers.

When the photons **132** which entered along the end of the light entrance window **128** are reflected by the concavo-convex surface of the second reflecting layer **120** with a reflection angle larger than the reflection angle represented by α in the drawing, most of the scattered photons can reach the first reflecting layer **121** except for those absorbed by the photoelectric conversion film **125**. If the shortest length from the boundary of the light entrance window **128** and the photoelectric conversion element **135** to the peaks of convexes is represented by D, and the width of the light entrance window **128** is represented by W, the relation of the reflection angle α, D and W is represented as $D \cdot \tan \alpha = W$. Therefore, it can be understood that, in order that most of photons reflected by the second reflecting layer **120** (photons not absorbed) should reach the first reflecting layer **121**, the reflection angle α (should satisfy the condition $D \cdot \tan \alpha \geqq W$.

It can be understood that, in order to obtain such a reflection angle, when the section of the convexes and concaves have triangles having a basic angle θ, the condition $D \cdot \tan 2\theta \geqq W$ should be satisfied. As specific calculation, when the width W of the light entrance window **128** is 20 μm, the thickness D**2** of the transparent layer **136** is 100 μm, the thickness D**1** of the photoelectric conversion element **135** is 50 nm, and the vertical drop from the peak to the bottom of the convexes and concaves is 200 nm or smaller, α should be 11.3 degrees or larger, and θ should be 5.7 degrees or larger. Therefore, by forming such convexes and concaves, photons can be more efficiently confined in the element **110** and detected.

The concavo-convex surface of the second reflecting layer **120** can be manufactured by, for example, forming concaves and convexes on the surface of the transparent layer **136** before producing the reflecting layer **120**, and then depositing a metal thereon to produce the reflecting layer **120**. The concaves and convexes of the transparent layer **136** can be formed by a known technique such as sputtering and microlithography.

In the drawing, a case where the whole surface of the second reflecting layer **120** is made into a concavo-convex surface is shown. However, a structure where concaves and convexes are partially formed, for example, for only a center portion of the element **110** or a portion facing the light entrance window **128** in parallel, and the remaining portion is made into a mirror surface may also be employed. When the whole surface is a concavo-convex surface, although photons which entered around the center of the solid-state imaging element **110** are reflected to the reflecting surface **127** of the reflecting layer **121**, photons which entered to a portion other than the center of the solid-state imaging element **110** may be returned to the light entrance window **128** or reflected even to a next solid-state imaging element **110**. By providing a concavo-convex surface for only a predetermined portion, such undesirable scattering can be reduced.

Further, the concaves and convexes may be regular concaves and convexes or irregular concaves and convexes.

According to the photo-detector of this embodiment, the same effect as that of the first embodiment can be obtained. Further, the concavo-convex surface of the second reflecting layer **120** enables efficient reciprocation of incident photons

not absorbed by the photoelectric conversion film **125** between both the reflecting layers. Furthermore, the photo-detector of this embodiment also has an effect that the transparent layer **136** can provide concaves and convexes which realizes a large reflection angle in addition to the same effect as that of the first embodiment. That is, when there is not the transparent layer **136**, concaves and convexes having a vertical drop larger than the thickness of the photoelectric conversion element **135** cannot be provided. However, by providing the transparent layer **136**, concaves and convexes of various sizes can be realized. Further, according to the present invention, because the transparent layer **136** is provided, concaves and convexes can be formed on the reflecting layer **120** without forming concaves and convexes on the pixel electrode **124**. This prevents possible problems, which would have been caused by formation of concaves and convexes on the pixel electrode **124**, such as increase in the dark current, generation of uneven electric field in the photoelectric conversion film **125**, generation of trap of electric charge by an energy level produced on the surface of the photoelectric conversion film **125**, uneven characteristics and variation thereof among the elements **110**, generation of cross-talk between the elements **110**.

In addition, this embodiment is not limited to the structure shown in the drawing, either, and various modifications are possible.

Third Embodiment

The photo-detector of the present invention according to the third embodiment will explained below with reference to FIG. **8**.

In the photo-detector of this embodiment, the shape of the second reflecting layer **120** differs from those of the first and second embodiments. The other configurations are the same as those of the first embodiment. That is, as shown in FIG. **8**, the reflecting surface of the second reflecting layer **120** of this embodiment inclines. Incident photons are reflected by this reflecting surface to the first reflecting layer **121** on one side of the light entrance window **128**.

Inclination of the reflecting surface for efficiently reflecting photons which entered from the light entrance window **128** to the first reflecting layer **121** will be explained. Here, in order to simplify the explanation, it is assumed that there shall be no refraction of light at the interfaces of the layers.

Also in this case, the inclination of the reflecting surface is designed so that most of photons which entered at the end of the light entrance window **128** except for those absorbed by the photoelectric conversion film **125** should reach to the first reflecting layer **121**. That is, in FIG. **8**, in order that photons which entered into the left end part of the light entrance window **128** should reach the reflecting layer **121** located on the right side of the light entrance window **128**, if the shortest length for photons to pass the end of the light entrance window **128** and reach the reflecting surface is represented by D, and the width of the light entrance window **128** is represented by W, the angle of the inclination ω should be determined to satisfy the condition $D \cdot \tan \omega \geqq W$.

As specific calculation, when the width of the light entrance window **128** is 20 μm, the thickness D**2** of the transparent layer **136** is 100 μm, and the thickness D**1** of the photoelectric conversion element **135** is 50 nm, ω should be 5.7 degrees or larger. For example, when it is intended to realize this structure in the solid-state imaging element **110** having an element width **126** of 100 μm with an angle ω of 6 degrees, a difference in thickness of a thin part and a thick part in the second reflecting layer **120** is required to be about 10.5 μm. For example, if the thickness D**2** of the photoelectric conversion element **135** is 50 nm, it is difficult to form such a structure without the transparent layer **136**. However, because the transparent layer **136** is provided in the photo-detector of this embodiment, a reflecting surface providing a large ω which enables effective reflection can be realized.

Although the embodiment shown in the drawing is for a case where the reflecting surface inclines only along the direction of the line B in FIG. **1**, the surface may have a two-dimensional structure. For example, a structure where the reflecting surface inclines from a corner toward a diagonal corner of the element **110** may also be used.

Fourth Embodiment

The photo-detector the present invention according to the fourth embodiment will be explained below with reference to FIG. **9**.

In the photo-detector of this embodiment, the structure of the second reflecting layer **120** differs from those of the first and second embodiments. The other configurations are the same as those of the first embodiment. That is, as shown in FIG. **9**, the second reflecting layer **120** of this embodiment has such a concavo-convex reflecting surface of which section has isosceles triangles, and the apex of each locates at the element center **150**, so that photons should be bilaterally symmetrically reflected from the element center **150**. By this reflecting layer **120**, photons which entered on the left side from the center of the element **110** are reflected to the reflecting layer **121** on the left side, and photons which entered on the right side from the center of the element **110** are reflected to the reflecting layer **121** on the right side, respectively.

In order that photons reflected by such a reflecting layer **120** should be efficiently reach the reflecting layer **121** without escaping from the light entrance window **128**, it is desirable that photons which entered around the center of the element **110** should reach the reflecting layer **127**. In such a case, if the basic angle of the isosceles triangle is represented by γ, the shortest length for photons **132** to pass the center of the light entrance window **128** and reach the apex of the isosceles triangle is represented by D, and the width of the light entrance window **128** is represented by W, it is sufficient that γ should satisfy the condition $D \cdot \tan \gamma \geqq (W/2)$. Thus, it can be understood that, in this embodiment, the shape of the second reflecting layer **120** can realize efficient reflection to the reflecting layer **121** with triangles of a smaller basic angle compared with the second reflecting layer of the second embodiment or the third embodiment.

Also in this embodiment, because the transparent layer **136** is provided, a reflecting surface having a large basic angle γ which enables effective reflection can be realized. That is, if the reflecting surface of the reflecting layer **110** is formed to have a convex having a section in the shape of an isosceles triangle having a base of the same length as the element width **126**, when the element width **126** is 100 μm and the basic angle is 3 degrees, for example, a height from the base to the apex is required to be about 2.6 μm. For example, if the thickness D**1** of the photoelectric conversion element **135** is 50 nm, it is difficult to realize such a structure without the transparent layer **136**, but it can be realized according to this embodiment.

In addition, as an example of modified version of this embodiment, the reflecting surface may also have a concave shape, not a convex shape. Further, the convex or concave shape is not limited to have a section having an isosceles triangle shape, and it may have a section having another type of triangle. In such a case, both the basic angles are desirably

such angles that photons should be reflected to the left and right reflecting layers **121**, respectively, as is the case mentioned above. Furthermore, the convex or concave shape is not limited to a shape having a section of a triangle shape, but may take various shapes. Further, although the concavo-convex shape is shown in the drawing along the sectional direction of the line A in FIG. **1**, this structure may be one-dimensional or two-dimensional structure. In the case of the former, the surface of the reflecting layer has a linear convex or concave shape, and in the case of the latter, it has a convex or concave shape in the form of cone or pyramid.

Fifth Embodiment

The photo-detector of this embodiment is characterized in that the reflecting layer **120** has two kinds of convexes functioning differently. That is, as shown in FIG. **10**, a convex portion having an isosceles triangle section is formed in an area **152** of the reflecting layer **120** corresponding to the light entrance window **128** as in the fourth embodiment, and slopes are formed at both ends **153** adjacent to other elements **110**. When the reflecting layers of adjacent elements are continuous, the slopes at the both ends **153** constitute a convex portion having an isosceles triangle section. The convex having an isosceles triangle section located at the element center reflects photons irradiated on the reflecting layer **120** so that they should go away from the element center **150**, but the slope located at the end of the element **110** returns photons to the direction of the element into which the photons entered.

In the photo-detector of this embodiment, cross-talk to the next element **110** can be reduced by the aforementioned structure while suppressing the escape of the photons from the light entrance window **128**. The structure shown in FIG. **10** is an example of the structure in which a convex and inclined surface are combined. However, the structure is not limited to this structure, and there may be variously modified versions for returning photons to the direction of the element **110** into which the photons entered. For example, the convex provided on the area **152** may be replace with a concave. Further, the slopes at the both ends **153** may be provided not only for two sides but also for four sides of the element **110**.

Sixth Embodiment

The photo-detector of this embodiment is characterized in that the convex has a curved mirror surface to concentrate reflected photons. An example of such a structure is shown in FIG. **11**. In FIG. **11**, the convex has a curved mirror surface in the area **152**, which makes photons, which entered from the light entrance window **128**, have a larger scattering angle as reflection point becomes closer to the element center **150**, and the reflected photons reach the reflecting layer **121** with being focused. By such a structure, escape of photons from the light entrance window **128** and cross-talk to the next element **110**, which are caused by divergence of photons, can be reduced.

Furthermore, as shown in FIG. **11**, the reflection surface has a curved mirror surface also for the area **153** located at the end of the element **110**, and reflects even photons reflected by the reflecting layer **121** so that they should be focused. By such a structure, the cross-talk to the next element **110** can further be reduced.

In this embodiment, curved mirror surfaces are provided for both the area **152** and the area **153**. However, the present invention is not limited to such a structure, and a curved mirror surface may be provided for either one of them. Furthermore, as the curved surface, various shapes including those of two-dimensional structure are employable.

Various embodiments in which the shape of the reflecting surface of the second reflecting layer is changed have been explained above as embodiments of the photo-detector of the present invention above. However, it is also possible to change the positions and numbers of the members constituting the element. Hereafter, embodiments in which positions and numbers of the members are different from those of the photo-detector of the first embodiment will be explained as the seventh to ninth embodiments.

Seventh Embodiment

The photo-detector of this embodiment is characterized in that the light entrance window **128** is disposed so that it should deviate from the center of the element.

The structure of the photo-detector **101** of this embodiment will be explained with reference to FIG. **12**. In this photo-detector **101**, although the center **150** of the element **110** is the center of the photoelectric conversion element **135**, the position of the center **151** of the light entrance window **128** differs from the center **150** of the element **110**. Corresponding to the shift of the light entrance window **128** from the element center, the microlens **122** is disposed so that the center thereof should correspond to the center **151** of the light entrance window **128** so as to focus photons on the light entrance window **128**.

In such a structure, the reflecting layer **120**, which reflects photons entering into the element **110**, desirably has a structure where the reflecting layer **120** reflects the photons to the reflecting surface **127** of the reflecting layer closer to the center **150** of the element **110**, the reflecting surface **127-2** in the element **110** shown in the drawing. Such a structure provides a large space in which photons can reciprocate between the reflecting layer **120** and the reflecting layer **121**, and thus reciprocate in the photoelectric conversion element **135**, to reduce the cross-talk to the next element **110** and improve the detection efficiency.

For that purpose, inclination is formed only in an area facing the light entrance window **128** for the second reflecting layer **120**. This slope continues to the boundary with the adjacent element closer to the center **171** of the light entrance window **128**, and the area shaded by the reflecting surface **127-2** is desirably a mirror surface not inclined. This makes it possible to prevent photons which are reflected by the reflecting surface **127** of the reflecting layer **121** and then reach the reflecting layer **120** from being reflected with a large reflection angle to enter into the next element **110**. At this time, because the photons reciprocate between the reflecting layer **121** and the reflecting layer **120** with a constant reflection angle, the number of times of reflection is substantially proportional to the distance from the boundary of the light entrance window **128** and the reflecting surface **127-2** to the next element, but amount of photons reciprocating without being detected decreases exponentially to the number of times of reflection. Therefore, it becomes possible to realize improvement in the detection efficiency and reduction of the cross-talk to the next element **110**.

Eighth Embodiment

In the photo-detector of this embodiment, the position of the transparent layer **136** differs from that of the first to seventh embodiments. That is, in this embodiment, as shown in FIG. **13**, the transparent layer **136** is disposed between the first reflecting layer **121** and the photoelectric conversion element **135**. In this embodiment, the same structures realized for the second reflecting layer in the second to seventh

embodiments can be realized also for the first reflecting layer **121** such as the structure where inclination, convex or concave is provided to make photons go away from the light entrance window **128**, the structure for returning photons to the element **110** center in a region close to the end of the element **110**, the structure for concentrating photons. This makes it possible to reduce escape of photons from the light entrance window **128** and the cross-talk to other elements **110**.

Ninth Embodiment

In the photo-detector of this embodiment, a second transparent layer is disposed between the first reflecting layer **121** and the photoelectric conversion element **135** of the first embodiment.

That is, in the photo-detector of this embodiment, as shown in FIG. **14**, a first transparent layer **134** is provided between the reflecting layer **120** and the photoelectric conversion element **135**, and a second transparent layer **136** is provided between the reflecting layer **121** and the photoelectric conversion element **135**. This embodiment employs a structure where the first and second reflecting layers **121** and **120** sandwich the photoelectric conversion element **135** via the transparent layer respectively, and therefore various shapes and structures can be realized in both the reflecting layer **120** and the reflecting layer **121** without suffering from limitations imposed by the thickness of the photoelectric conversion element **135**. Improvement in the detection efficiency and reduction of the escape from the light entrance window **128** and cross-talk to other solid-state imaging elements **110** can be thereby realized.

An embodiment of the solid-state imaging element of the present invention provided with a structure for reducing the cross-talk of photons with adjacent solid-state imaging elements will be explained below.

Tenth Embodiment

An example of the photo-detector of this embodiment is shown in FIG. **15**.

Although the photo-detector of this embodiment is the same as that of the first embodiment in the configuration that it is provided with the first reflecting layer **121** on the photon incidence side of the photoelectric conversion element **135**, and provided with the transparent layer **136** and the second reflecting layer **120** on the opposite side, a shading layer **131** between elements is provided at the boundary of the transparent layer **136** and the adjacent element.

The shading layer **131** between elements desirably shades in such a degree that the photon transmission should be, for example, 20% or less. The cross-talk of photons to the next element **110** can be thereby reduced. Further, the shading layer **131** between elements may have a structure for reflecting photons. In this case, by making the reflection rate 40% or more, for example, photons coming to the end of the element **110** can be reflected to the direction of the element center **150** to improve the detection efficiency. Furthermore, the shading layer **131** between elements may have both the functions for shading and reflection.

Examples of the material of such a shading layer **131** between elements include materials which shade photons, for example, metals such as aluminum and silver, white paints comprising a white pigment or the like in a binder, and a substance which has a refractive index different from that of the photoelectric conversion film **125** and causes reflection due to the difference in the refractive index. As for the production method of the shading layer **131** between elements, it can be manufactured by, for example, a method of forming a film of the material mentioned above on sides of the transparent layer **136** of each element by coating or deposition, a method of forming slots in a glass plate or plastic plate which constitutes the transparent layer, and injecting a material which shades photons such as a white paint into the slots, or the like.

A slot provided between the elements **110** itself may also function as the shading layer **131** between elements. That is, when a space (slot) of air or vacuum is provided as the shading layer **131** between elements, photons are reflected and shaded by a side of the slot. Furthermore, it is also possible to provide a structure of a frosted glass-like profile on the side of the slot by roughening the surface for scattering photons.

Although the shading layer **131** between elements is provided so as to penetrate the transparent layer **136** in the embodiment shown in the drawing, the present invention is not limited to this structure, and it may be provided without such penetration. Furthermore, the layer may be provided for a part of the photoelectric conversion element **135**.

Further, in this embodiment, although the shading layers **131** between elements are provided all the spaces between the elements **110**, one of the layer may be provided for every two or more elements. Furthermore, although a case where the shading layer **131** between elements is formed along the direction of the sectional line A in FIG. **1** is shown in the drawing, the shading layer **131** between elements may be provided along the direction perpendicular to that direction (direction of the sectional line B in FIG. **1**), or may be two-dimensionally provided along both the directions.

Eleventh Embodiment

As the eleventh embodiment, an embodiment of the photo-detector in which a structure where photons do not enter into the switch **114** of the element **110** is realized will be explained below. The photo-detector of this embodiment is shown in FIG. **16**. FIG. **16** is a sectional view along the line B in FIG. **1**.

As shown in FIG. **16**, the switch **114** is disposed at a position shaded by the reflecting surface **127** of the reflecting layer **121**, and further has a switch shading layer **180** around it. This switch shading layer **180** is formed with a material which shades photons, for example, a metal such as aluminum or silver, a white paint containing a white pigment in a binder, or the like. When the switch shading layer **180** is formed with a metal, a structure that prevents electric contact such as an insulation layer **182** is provided between the switch shading layer and the switch **114**, the photoelectric conversion film **125**, the pixel electrode **124**, and the common electrode **123**. This insulation layer **182** consists of, for example, a metal oxide, silicon oxide, silicon nitride or the like.

The switch shading layer **180** desirably shades photons in such a degree that, for example, photon transmission should be 20% or less. Error signals and noises which are generated due to detection of light by the switch **114** can be thereby suppressed. Further, the switch shading layer **180** may have a structure for reflecting light. In such a case, the reflection rate of the layer is preferably, for example, 40% or more. Photons which come to the end of the element **110** can be thereby reflected to the direction of the element center **150** to improve the detection efficiency. Furthermore, the switch shading layer **180** may have both the functions for shading and reflection.

Although FIG. **17** illustrates a configuration where the switch shading layer **180** is provided in the photo-detector of

the first embodiment as a basic structure, this embodiment can also be applied to the photo-detectors of the second to the tenth embodiments.

Twelfth Embodiment

The photo-detector of this embodiment differs from those of the embodiments explained above in that the reflecting layer **121** does not have a specific light entrance window, and does not have a concentration means which is combined with such a light entrance window. That is, in the photo-detector of this embodiment, as shown in FIG. **17**, the reflecting layer **121** consists of a one-way mirror, and transmits incident photons **132** so that the photons penetrate into the photoelectric conversion element **135**, but it reflects photons reflected from the reflecting layer **120** so that the photons should go into the photoelectric conversion element **135** again. This one-way mirror is manufactured by, for example, forming a film of chromium, SUS or the like on one surface of a glass plate so thinly that the film should be translucent. A part of incident photons can be thereby confined in the element **110** and detected, and thus it becomes possible to improve the detection efficiency.

Even when the reflecting layer **121** which is a one-way mirror is not provided, reflection occurs at the interface of the photoelectric conversion film **125** and the common electrode **123** or the interface of the common electrode **123** and air or vacuum of the outside due to the difference of refractive index. However, degree of this reflection is not a degree effective for improving the detection efficiency. In order to realize effective detection efficiency with this configuration, the reflecting layer **121** should have a reflection rate of at least 10% or more, and it desirably has a reflection rate of 30% or more.

Furthermore, transmission rate of the one-way mirror is lower than that of glass or the like for the structural reason. However, in order to detect an effective amount of photons, for example, a transmission rate of 20% or more is desirable, and a product of transmission rate and the reflection rate of, for example, 0.05 or more is desirable.

Since processing for providing the light entrance window on the first reflecting layer and processing for providing a concavo-convex or inclined surface of the second reflecting layer are unnecessary in this embodiment, it has an advantage that the manufacture of the photo-detector becomes easy.

The solid-state imaging element of the present invention and various embodiments of the photo-detector which carries it have been explained above. However, the present invention is not limited to the aforementioned embodiments, and various modifications are possible. For example, it is also possible to suitably combine the members explained in the embodiments. Further, it is also possible to omit certain member or members among the total members mentioned in the embodiments.

Hereafter, the personal authentication system of the present invention will be explained. The personal authentication system of the present invention utilizes the photo-detector of the present invention.

An embodiment of a personal authentication system using finger vein pattern utilizing the personal authentication system of the present invention will be explained below with reference to FIGS. **18** to **20**. FIG. **18** is an external view of the system, and FIG. **19** is a sectional view along the sectional plane C in FIG. **18**. This personal authentication system using finger vein pattern **160** is a system for identifying an individual by using a captured finger vein pattern image, and has an external view as shown in FIG. **18** that an image capturing window **169** surrounded by an outer wall **162** is formed on a system package **161**.

The outer wall **162** also serves as a stand on which a finger **163** is placed, and prevents external light from entering into a photo-detector **101** disposed in the image capturing window. In the image capturing window **169**, a light irradiating means **165** comprising a diode and the photo-detector **101**, and a light shading plate **168** for shading light is provided between the light irradiating means **165** and the photo-detector **101**. The photo-detector **101** is the photo-detector of the present invention, and for example, any one of the photo-detectors of the first to twelfth embodiments mentioned above is used. As the diode, one which emits near-infrared light which easily enters into the inside of a finger is preferably used. Further, the light irradiating means **165** is provided at a position at which the finger **163** can substantially contact with it. Further, on the photo-detector **101**, a collimator **166** is provided. The collimator **166** prevents light from the light irradiating means **165** from directly entering into the photo-detector **101**, and eliminates scattered radiation entering into the detector with an angle other than substantially perpendicular to the detector.

Although not shown in the drawings, this system package **161** is connected to, for example, a personal computer (PC) or ATM depending on the use of the personal authentication system using finger vein pattern. Further, in the PC or ATM, a memory in which biological information of objects is registered and stored beforehand, and a processor for performing signal processing for an digital image obtained by the read-out circuit of the photo-detector to extract information and comparing the extracted information with the biological information of the individual registered in the memory to perform personal authentication are provided.

Flow of the process for performing personal authentication with such a configuration as mentioned above will be explained with reference to FIG. **20**.

First, if the finger **163** is placed on the personal authentication system using finger vein pattern **160** as shown in FIG. **19**, the diode **165** irradiates light on the finger. The light irradiated into the finger **163** is absorbed and scattered in the inside of the finger, and a part of it is emitted from the surface. Since absorption by deoxyhemoglobin in blood in veins differs from absorption by other tissues, blood and the like, an image of the veins can be obtained by imaging the light by the photo-detector **101** (Step **200**).

The thus obtained image is then sent to the connected PC or computer in ATM, and subjected to image processing therein and used for authentication using finger vein pattern. In the image processing, image cutting **201** is performed first for the captured finger vein image to extract the profile and thereby cut a portion of the finger. Then, this image is subjected to image filtering **202** to prepare an image consisting of spatial frequency components required for a finger vein pattern. This image filtering **202** is, for example, high-pass filtering. Then, position correction **203** is performed to correct difference in angle of the finger. Then, information extraction **204** is performed for this image to obtain only a finger vein image **205** to be used for personal authentication. This processing is, for example, a processing for extracting only an image of finger veins used for personal authentication from the image obtained by the image capturing on the basis of sizes of finger veins and concentrations.

In the personal authentication, authentication **207** is performed for determining whether the extracted finger vein image is the same as the finger vein image **206** registered beforehand. This finger vein image **206** registered beforehand

is also an image undergone the same image processing as that mentioned above. Further, depending on the system, a plurality of finger vein images **206** may be registered beforehand. In this authentication **207**, it is determined whether the images match or not on the basis of correlation of the images by using, for example, a known pattern recognition technique or the like. In this determination, when the same pattern is retrieved, authentication of a registered user **209** is completed, and when the same pattern is not retrieved, it is determined that the individual is a non-registered user **208**. When this personal authentication system using finger vein pattern is used for PC, for example, on the basis of this result, a signal for validating PC is sent to PC, only when the individual is authenticated as a registered user. Further, when this personal authentication system using finger vein pattern is used for ATM, for example, a signal required to enable withdrawing cash is sent to ATM, only when a registered user is authenticated.

According to the personal authentication system using finger vein pattern of this embodiment, use of the photo-detector of the present invention as the photo-detector enables highly precise imaging of finger veins, and as a result, highly precise authentication is attained.

The aforementioned external view and configuration of the personal authentication system using finger vein pattern, processing method, image capturing method and the like are examples thereof, and the present invention is not limited to these. For example, although the light is irradiated upward in the drawing, i.e., from the photo-detector **101** side, in the system shown in the drawing, there may also be a configuration that light is irradiated on the side of the finger, i.e., along the direction perpendicular to the photo-detector **101**, or a configuration that light is irradiated downward in the drawing, i.e., light is irradiated on the finger inserted between the photo-detector **101** and the diode **165**. Furthermore, although a personal authentication system using finger vein pattern is described in this embodiment, the present invention can of course be applied to a personal authentication system using vein pattern of palm or back of the hand.

A personal authentication system using fingerprint is shown in FIGS. **21** and **22** as another embodiment of the personal authentication system of the present invention. Also in this embodiment, it is the same as the personal authentication system using finger vein pattern shown in FIG. **18** in that the photo-detectors of the present invention, for example, any one of the photo-detectors of the first to twelfth embodiments, is used as the photo-detector.

In this personal authentication system using fingerprint **170**, a glass plate **172** is provided as the upper surface of the image capturing window **169**, and the authentication is performed by holding the finger **163** on the glass plate **172**. Inside the image capturing window **169**, there are provided the diode **165** for irradiating light on the finger surface, the light shading plate **168** which prevents direct incidence of light, and the collimator **166** which eliminates direct incidence of light and scattered radiation entering with an angle other than an angle substantially perpendicular to the detector. As the light of the light source, for example, visible light or near-infrared light is used.

Also in this personal authentication system using fingerprint **170**, authentication using fingerprint can be realized by, for example, a method similar to the method for authentication using finger vein pattern shown in FIG. **20**, and fingerprint on a surface of a finger is imaged by such a method to enable authentication of users. However, this configuration is an example of the personal authentication system using fingerprint, and various other configurations and shapes of the system, mechanisms, processing methods and authentication methods may be possible.

A personal authentication system using finger vein pattern and a personal authentication system using fingerprint have been explained above as embodiments of the personal authentication system of the present invention. However, the present invention is also applicable to other personal authentication systems. For example, the present invention is also applicable to personal authentication systems utilizing iris pattern, various personal authentication systems in which images are obtained by using visible light or infrared rays, further, systems for performing personal authentication by using a plurality of methods, for example, personal authentication systems using finger vein pattern and fingerprint.

Further, the photo-detector of the present invention can be used not only for personal authentication systems, but also for various systems for business, research, education and so forth including systems using a photo-detector in which imaging is performed by using visible light or near-infrared rays for observation or imaging of outer space, celestial bodies, environment, observation or imaging used in the medical field and so forth.

Example

Hereafter, an example performed in order to confirm improvement in detection efficiency obtainable by the photo-detector of the present invention will be explained.

First, photo-detectors of Structure **1** and Structure **2** shown in FIG. **23** were actually manufactured, and basic data were obtained. Used were a glass substrate having a thickness of 500 μm as the substrate **136**, polysilicon sensor having a thickness of 50 nm as a photoelectric conversion element **135**, and an aluminum foil having a thickness of 50 nm and a reflecting layer of a mirror surface as the reflecting layer **120**. Further, as for the light source, light having a wavelength of 500 nm was used. The transmission rate of the glass substrate was 99% or more, and absorption of the light by the substrate **136** was negligible.

First, detection efficiency and transmission rate of the photo-detector of Structure **1** were measured and found to be 0.052 and 0.68, respectively. Then, detection efficiency of the photo-detector of Structure **2** was measured and found to be 0.081, which was 1.56 times the value obtained with Structure **1**. Here, if the reflection rate of the reflecting layer **120** is represented by χ, light in an amount of 0.68χ time of the incident light was reflected by the reflecting layer **120** and entered into the photoelectric conversion element **135**, and the detection efficiency was thereby increased 0.56 time. Therefore, it is represented as $0.68\chi=0.56$, and the reflection rate χ is calculated to be 0.82.

Then, by using these results, detection efficiency of the photo-detector of Structure **3** was calculated as follows. Here, in order to ease of examination, inflow and outflow of light between the elements **110** and escape of light from the light entrance window **128** were considered negligible. The case where the inflow and outflow of light between the elements **110** are negligible is a case where the elements **110** are sufficiently large relative to spread of light therein, or a case where there is a structure sufficient for preventing cross-talk between the elements **110**. The case where escape of light from the light entrance window **128** is negligible is a case where the light entrance window **128** is sufficiently small relative to the size of the element **110**, or a case where the reflecting layer **120** has a structure for reflecting most of light to the reflecting surface **127** of the reflecting layer **121**.

First, if the reflection rate of the reflecting layer **121** is assumed to be the same as that of the reflecting layer **120**, and the amount of light which entered into the element **110** is taken as 1, the amount of light reflected by the reflecting layer **121** is 0.682×0.822=0.31. Therefore, if light of this amount again goes to the photoelectric conversion element **135** and comes back once, the detection efficiency of the photo-detector increases by 0.081×0.31=0.025. Further, when the reflection by the reflecting layer **120** and the reflecting layer **121** is continued, and light continues to go to the photoelectric conversion element **135** and come back until light is detected, the detection efficiency is represented as $0.081\times(1+0.31+0.31^2+\ldots)=0.117$. Therefore, by providing the reflecting layer **121**, the detection efficiency is increased from 0.081 to 0.117, and it can be improved by 44%. As described above, it was confirmed that the structure of the photo-detector **101** was effective for obtaining higher sensitivity of the detector.

However, if most of light is lost by the time that the light reaches and is reflected by the reflecting layer **121** at least for the first time, the effect of the present invention becomes not so significant. Therefore, when the reflection rate of the reflecting layer **120** is represented by R**1**, the reflection rate of the reflecting layer **121** is represented by R**2**, and transmission rate of the photoelectric conversion element **135** and the transparent layer **136** for transmission of light is represented by T, it is desirable that T×T×R**1**×R**2** should be 0.1 or larger.

INDUSTRIAL APPLICABILITY

According to the present invention, a photoelectric conversion element showing improved conversion efficiency and a photo-detector showing improved detection efficiency are provided. These photoelectric conversion element and photo-detector can be used as a photo-detector or imaging element built into a personal authentication system and so forth, and a highly precise personal authentication system is thereby provided.

What is claimed is:

1. A solid-state imaging element comprising:

a photoelectric conversion layer which generates electric charges upon incidence of photons,

a substantially transparent first electrode which is disposed on the photoelectric conversion layer on the photon incidence side,

a substantially transparent second electrode which is disposed on the photoelectric conversion layer on the side opposite to the photon incidence side to face the first electrode and detects electric charges generated by the photoelectric conversion layer,

a first reflecting layer which is disposed in contact with the first electrode on the photon incidence side and has a reflecting surface as the surface in contact with the first electrode,

a second reflecting layer which is disposed on the second electrode on the side opposite to the photon incidence side and has a reflecting surface as the surface facing the second electrode, and

a transparent layer or layers disposed between the first electrode and the first reflecting layer and/or between the second electrode and the second reflecting layer.

2. The solid-state imaging element according to claim **1**, wherein the first reflecting layer has a light entrance window which transmits incident photons.

3. The solid-state imaging element according to claim **2**, wherein the first reflecting layer has a concentration means for concentrating incident photons to the light entrance window on the photon incidence side.

4. The solid-state imaging element according to claim **2**, wherein the center of the light entrance window deviates from the center of the solid-state imaging element.

5. The solid-state imaging element according to claim **4**, wherein the first reflecting layer has a section separated into a first region and a second region narrower than the first region by the light entrance window, and

the second reflecting layer has a concavo-convex or inclined surface so as to reflect incident photons mainly to the first region.

6. The solid-state imaging element according to claim **2**, wherein the first reflecting layer also serves as one of the electrodes of the photoelectric conversion layer.

7. The solid-state imaging element according to claim **1**, wherein the photoelectric conversion layer consists of amorphous silicon or polysilicon.

8. The solid-state imaging element according to claim **1**, wherein at least a part of the reflecting surface of the first reflecting layer and/or the second reflecting layer has a concavo-convex or inclined surface.

9. The solid-state imaging element according to claim **8**, wherein the concavo-convex surface of the first reflecting layer and/or the second reflecting layer has a sectional shape comprising a plurality of triangles.

10. A solid-state imaging element comprising:

a photoelectric conversion means which generates an electric signal upon incidence of photons,

a transparent layer which is substantially transparent for incident photons,

a first reflecting layer and a second reflecting layer which reflect incident photons,

wherein

the photoelectric conversion means is disposed with the transparent layer between the first reflecting layer and the second reflecting layer so that incident photons should be reflected once or more times by each of the first reflecting layer and the second reflecting layer to introduce the photons into the photoelectric conversion means two or more times.

11. The solid-state imaging element according to claim **10**, wherein

the photoelectric conversion means comprises:

a photoelectric conversion layer which generates electric charges upon incidence of photons,

a substantially transparent first electrode which is disposed on the photoelectric conversion layer on the photon incidence side, and

a substantially transparent second electrode which is disposed on the photoelectric conversion layer on the side opposite to the photon incidence side to face the first electrode, the first electrode and the second transparent electrode having a structure for reading amount of electric charge or an electric signal generated by the electric charges,

the first reflecting layer has a reflecting surface as the surface facing the first electrode, and is disposed on the first electrode on the photon incidence side,

the second reflecting layer has a reflecting surface as the surface facing the second electrode, and is disposed on the second electrode on the side opposite to the photon incidence side, and

the transparent layer is disposed between the first electrode and the first reflecting layer and/or between the second electrode and the second reflecting layer.

12. A photo-detector comprising:

a substrate,

an array formed on the substrate and comprising a plurality of solid-state imaging elements, and

a drive circuit for driving a plurality of the solid-state imaging elements, and having a structure in which a second electrode, a photoelectric conversion layer and a first electrode are disposed in this order from the substrate in the plurality of the solid-state imaging elements, and the solid-state imaging elements are electrically connected at the first electrode or the second electrode, wherein

a second reflecting layer having a reflecting surface as the surface facing the array is formed between the substrate and the second electrode in the array,

a first reflecting layer having a light entrance window which transmits incident photons and a reflecting surface as the surface facing the array is disposed on the first electrode in the array, and

a transparent layer which transmits photons is formed between the first electrode and the first reflecting layer in the array and/or between the second electrode and the second reflecting layer in the array.

13. The photo-detector according to claim 12, wherein the transparent layer of each solid-state imaging element is provided with a third reflecting layer which reflects photons and/or a shading layer which shades photons between the transparent layer and the transparent layer of the adjacent solid-state imaging element.

14. A personal authentication system comprising

a light source which emits light having a wavelength of from visible to near-infrared region,

a photo-detector which detects photons irradiated on an object from the light source and undergone at least one of reflection, transmission and internal scattering,

a read-out circuit which reads signals from the photo-detector to form a digital image of biological information of the object,

a memory means for storing biological information of the object beforehand, and

an authentication means for performing signal processing for the digital image created by the read-out circuit to extract information and comparing the extracted information with the biological information stored by the memory means to attain personal authentication,

wherein the photo-detector is the photo-detector according to claim 12.

15. The personal authentication system according to claim 14, wherein the biological information consists of a vein pattern of at least one of finger, palm of the hand and back of the hand.

16. The personal authentication system according to claim 14, wherein the biological information is a fingerprint.

17. A photo-detector comprising:

a transparent layer;

an array formed on the transparent layer comprising a plurality of solid-state imaging elements; and

a drive circuit, formed on the transparent layer for driving a plurality of the solid-state imaging elements, and comprising a structure in which a second electrode, a photoelectric conversion layer and a first electrode are disposed in this order from the transparent layer side in a plurality of the solid-state imaging elements, wherein the solid-state imaging elements are electrically connected at the first electrode or the second electrode,

wherein the transparent layer is comprised of a material which transmits photons,

a second reflecting layer formed on the transparent layer, said second reflecting layer including a reflecting surface as the surface facing the photoelectric conversion layer on a surface of the transparent layer opposite to the surface of the transparent layer on which the drive circuit is formed; and

a first reflecting layer formed on the first electrode, said first reflecting layer including a reflecting surface as the surface facing the photoelectric conversion layer,

wherein the first reflecting layer or the second reflecting layer is provided with a light entrance window which transmits incident photons to the photoelectric conversion layer.

18. The photo-detector according to claim 17, wherein portions of the transparent layer corresponding to each solid-state imaging element are provided with a third reflecting layer which reflects photons and/or a shading layer which shades photons between the corresponding portion of the transparent layer and the corresponding portion of the transparent layer of the adjacent solid-state imaging element.

19. A personal authentication system comprising

a light source which emits light having a wavelength of visible to near-infrared region,

a photo-detector which detects photons irradiated on an object from the light source and which have undergone at least one of reflection, transmission and internal scattering,

a read-out circuit which reads signals from the photo-detector to form a digital image of biological information of the object,

a memory means for storing biological information of the object beforehand, and

an authentication means for performing signal processing for the digital image created by the read-out circuit to extract information and comparing the extracted information with the biological information stored by the memory means to attain personal authentication,

wherein the photo-detector is the photo-detector according to claim 17.

20. The personal authentication system according to claim 19, wherein the biological information consists of a vein pattern of at least one of finger, palm of the hand and back of the hand.

21. The personal authentication system according to claim 19, wherein the biological information is a fingerprint.

* * * * *