US 20090160000A1

(19) United States

(12) Patent Application Publication

(10) Pub. No.: US 2009/0160000 A1

(43) Pub. Date: Jun. 25, 2009

Kim

(54) IMAGE SENSOR AND METHOD FOR MANUFACTURING THE SENSOR

(76) Inventor: **Dae-Young Kim**, Icheon-si (KR)

Correspondence Address:
SHERR & VAUGHN, PLLC
620 HERNDON PARKWAY, SUITE 200
HERNDON, VA 20170 (US)

(21) Appl. No.: **12/131,185**

(22) Filed: **Jun. 2, 2008**

(30) **Foreign Application Priority Data**

Dec. 24, 2007 (KR) ..... 10-2007-0136247

**Publication Classification**

(51) **Int. Cl.**
*H01L 31/0232* (2006.01)
*H01L 31/18* (2006.01)

(52) **U.S. Cl.** ..... **257/432**; 438/70; 257/E31.127

(57) **ABSTRACT**

An image sensor and a method for manufacturing the sensor are provided for reducing loss of light reflected from photodiodes, and thus, improving light efficiency. The method of manufacturing an image sensor can include providing a semiconductor substrate having a photodiode; and then forming a reflective film frame on the photodiode, the reflective film frame having sidewalls that are inclined with respect to the uppermost surface of the photodiode; and then forming an opening over the surface of the reflective film frame and corresponding to the photodiode by forming a reflective film on the sidewalls of the reflective film frame.

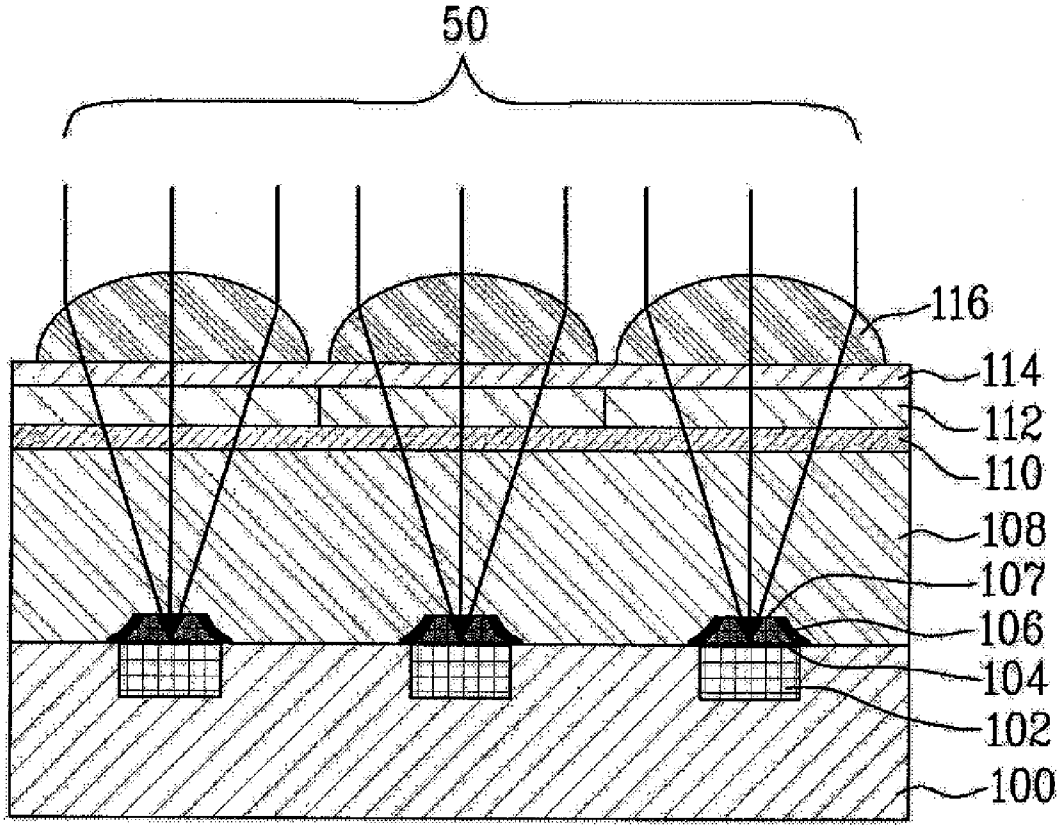

FIG. 1

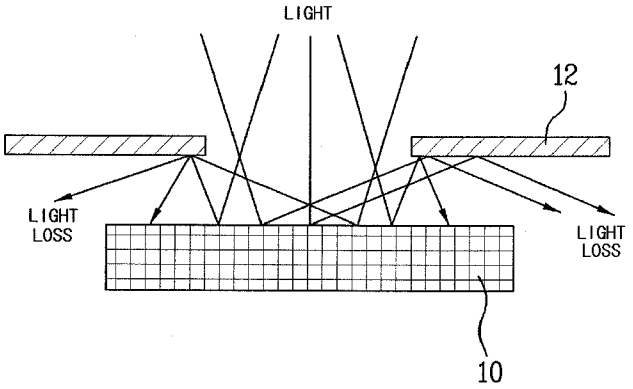


FIG. 2

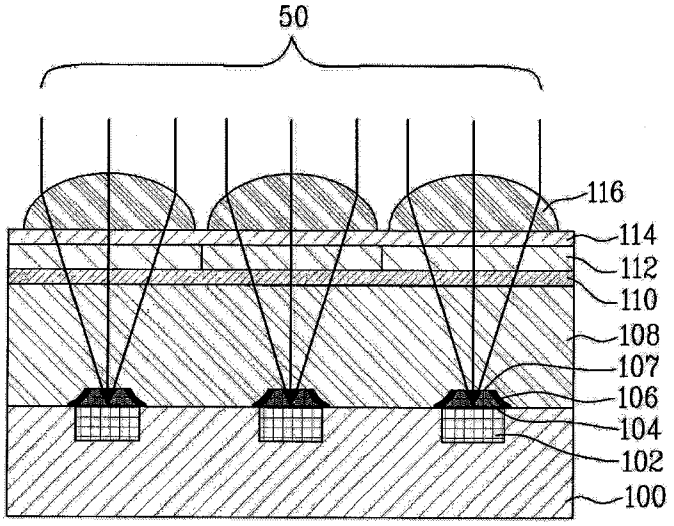


FIG. 3

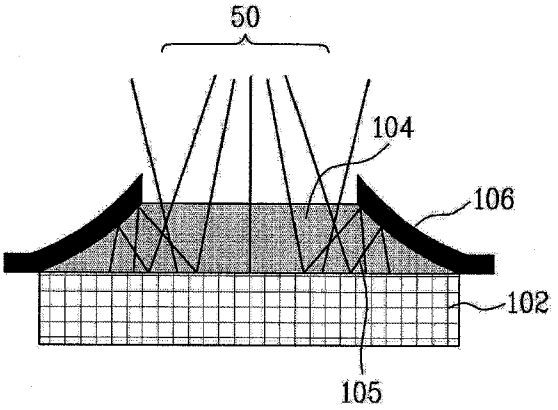

FIG. 4A

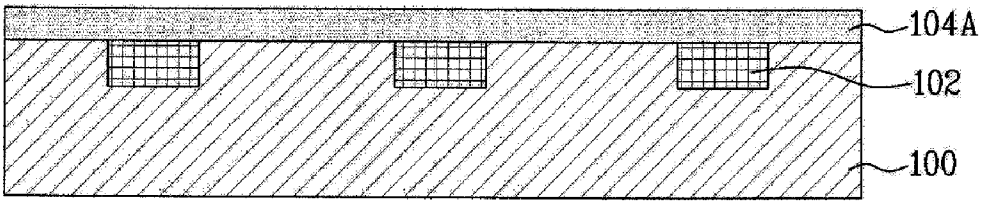


FIG. 4B

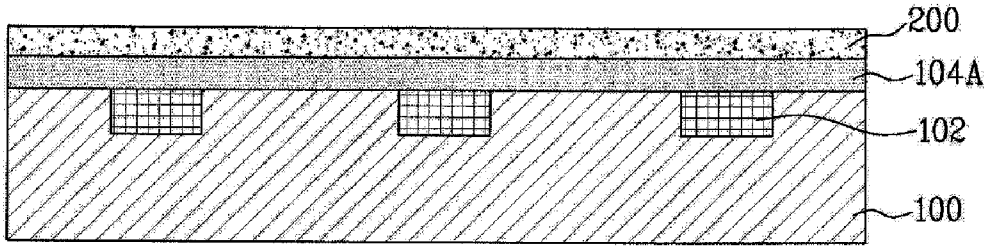


FIG. 4C

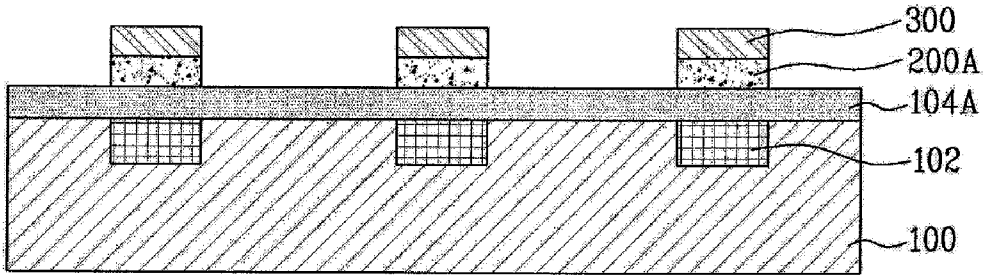


FIG. 4D

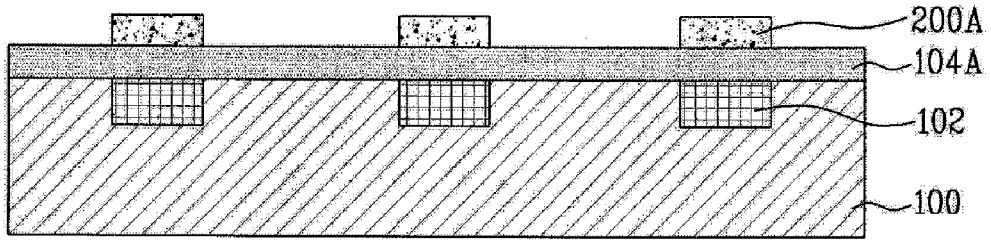

FIG. 4E

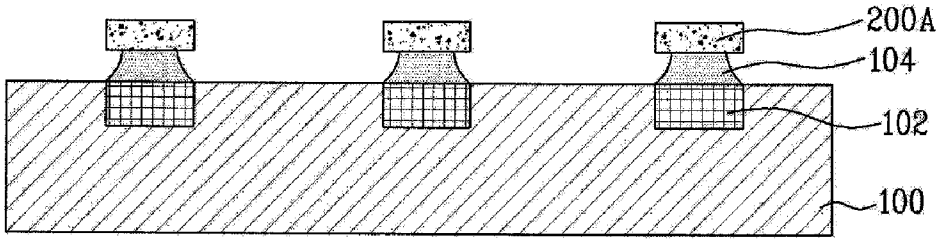


FIG. 4F

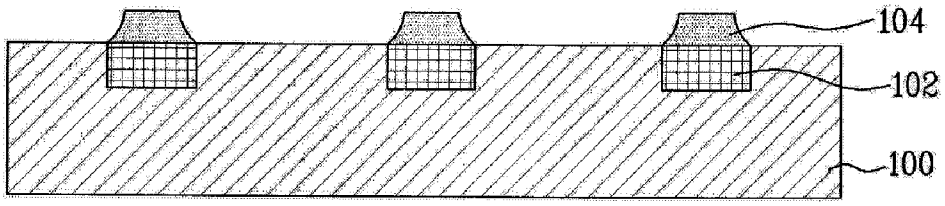


FIG. 4G

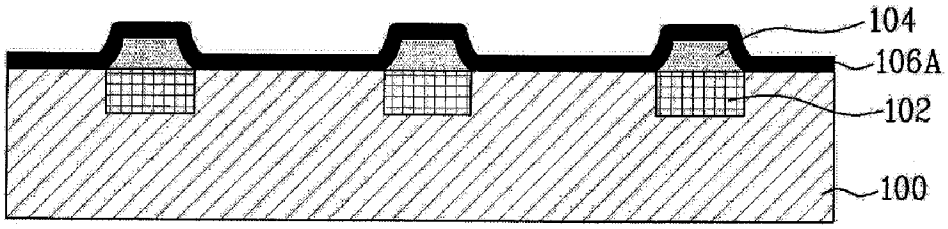


FIG. 4H

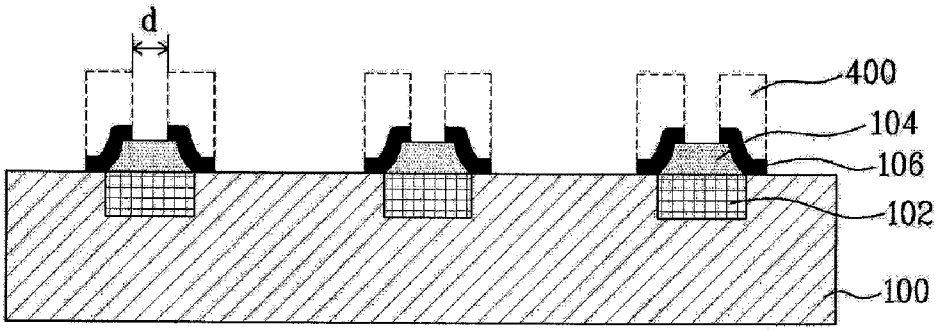

# IMAGE SENSOR AND METHOD FOR MANUFACTURING THE SENSOR

**[0001]** The present application claims priority under 35 U.S.C. 119 to Korean Patent Application No. 10-2007-0136247 (filed on Dec. 24, 2007), which is hereby incorporated by reference in its entirety.

## BACKGROUND

**[0002]** An image sensor is a semiconductor device which converts an optical image into an electrical signal. The image sensor may be classified generally into a charge coupled device (CCD) image sensor and a complementary metal oxide semiconductor (CMOS) image sensor. The CMOS image sensor may include a photodiode for sensing illuminated light and a CMOS logic circuit for processing the detected light into an electrical signal to produce data.

**[0003]** As the amount of light received by the photodiode becomes larger, the image sensor has more increased photosensitivity. The photosensitivity can be improved by increasing a fill factor representing a ratio of an area of the photodiode to an entire area of the image sensor, or by changing a path of light incident on an area except the photodiode to focus the light on the photodiode. As a representative example of a light focusing technology, a micro lens (generally, a convex micro lens) may be formed on and/or over the photodiode using a highly light-transmissive material. The micro lens refracts incident light to illuminate a larger amount of light on and/or over the photodiode. In this case, light parallel to an optical axis of the micro lens is refracted by the micro lens, and a focus is formed at a specific position on the optical axis.

**[0004]** Further, in the CMOS image sensor, a portion of the light incident on the photodiode may be reflected by the photodiode, thereby reducing the light focusing efficiency. Accordingly, there is a disadvantage of reducing the photosensitivity of the image sensor. Thus, a reflective film may be formed above the side surface of the photodiode to reduce loss of the reflected light as disclosed in Korean Patent Application No. 10-2005-0134399, filed by the present applicant.

**[0005]** As illustrated in example FIG. **1**, a CMOS image sensor may include photodiode **10** and reflective film **12** formed above and parallel to photodiode **10**. By this configuration, it is possible to partially prevent loss of light reflected from photodiode **10**. Meaning, the CMOS image sensor illustrated in example FIG. **1** may exhibit high light efficiency since light reflected from photodiode **10** is reflected by reflective film **12** to photodiode **10**. However, a large amount of the reflected light is lost out of photodiode **10**.

## SUMMARY

**[0006]** Embodiments relate to an image sensor and a method for manufacturing the sensor having improved light focusing efficiency.

**[0007]** Embodiments relate to an image sensor and a method for manufacturing the sensor that is capable of preventing loss of light by returning light reflected from photodiodes to the photodiodes.

**[0008]** Embodiments relate to a method of manufacturing an image sensor that can include at least one of the following steps: forming an insulating film on and/or over a semiconductor substrate having a plurality of photodiodes; and then forming a hard mask pattern corresponding to the photodiodes on and/or over the insulating film; and then forming reflective film frames having inclined sidewalls by wet etching the insulating film using the hard mask pattern as an etching mask; and then removing the hard mask pattern; and then forming a reflective film layer on and/or over an entire surface of the semiconductor substrate to cover the reflective film frames; and then forming reflective films having an opening positioned above the photodiodes to receive light by selectively removing the reflective film layer through a photolithography process.

**[0009]** Embodiments relate to an image sensor that can include at least one of the following: a plurality of photodiodes formed on and/or over a semiconductor substrate; reflective film frames which have a width decreasing from bottom to top and are formed on and/or over the photodiodes; and reflective films which cover the reflective film frames and have openings to receive light.

**[0010]** Embodiments relate to a method that can include at least one of the following steps: providing a semiconductor substrate having a photodiode; and then forming a reflective film frame on the photodiode, the reflective film frame having sidewalls that are inclined with respect to the uppermost surface of the photodiode; and then forming an opening over the surface of the reflective film frame and corresponding to the photodiode by forming a reflective film on the sidewalls of the reflective film frame.

**[0011]** In the image sensor and the method of manufacturing the same according to the present invention, the reflective films can be formed to be inclined and bent on and/or over the respective photodiodes, thereby returning light reflected from the photodiodes to the photodiodes to a maximum extent. Thus, there is an effect of reducing loss of light reflected from the photodiodes and improving light efficiency.

## DRAWINGS

**[0012]** Example FIG. **1** illustrates an enlarged view of a portion including a photodiode in a conventional CMOS image sensor;

**[0013]** Example FIGS. **2** to **4** illustrate an image sensor and a method of manufacturing the image sensor, in accordance with embodiments.

## DESCRIPTION

**[0014]** Reference will now be made in detail to the preferred embodiments of the present invention, examples of which are illustrated in the accompanying drawings. Wherever possible, the same reference numbers will be used throughout the drawings to refer to the same or like parts.

**[0015]** As illustrated in example FIG. **2**, an image sensor in accordance with embodiments can include a plurality of photodiodes **102** are formed in semiconductor substrate **100** and serve to sense light to produce charges according to the amount of incident light. The image sensor, which can serve as a light sensing device, may employ a plurality of photogates instead of photodiodes **102**. Further, although photodiodes **102** are formed in semiconductor substrate **100**, the image sensor in accordance with embodiments is not limited thereto, and thus, can be disposed on and/or over semiconductor substrate **100**. A plurality of reflective film frames **104** have a width decreasing from bottom to top, i.e., substantially conical-shaped, can be used to form reflective films **106** as will be described later. Reflective film frames **104** can be

formed on and/or over photodiodes **102**, respectively. Reflective films **106** can be composed of a metal material and can cover reflective film frames **104** and have openings **107** for receiving light. The size of openings **107** can vary in accordance with the size of photodiodes **102**. In accordance with embodiments, openings **107** can occupy between 70 to 90% of the uppermost surface area of photodiodes **102**.

**[0016]** The image sensor in accordance with embodiments can also include interlayer insulating film **108**, protective film **110**, a plurality number of color filter layers **112**, planarization layer **114** and a plurality of micro lenses **116** corresponding to a respective photodiode **102**. The image sensor in accordance with embodiments is not limited to such a structure and can include any structure so long as reflective films **106** and reflective film frames **104** are respectively disposed on and/or over photodiodes **102** to have a structure to receive light into photodiodes **102**. Meaning, interlayer insulating film **108**, protective film **110**, color filter layers **112**, planarization layer **114** and micro lenses **116** can be configured differently from the manner illustrated in example FIG. **2**.

**[0017]** The respective layers are explained as follows. Interlayer insulating film **108** can be formed on and/or over semiconductor substrate **100** including reflective films **106**. Protective film **110** can be formed on and/or over interlayer insulating film **108** to protect the device from moisture and scratching. Color filter layers **112** can be formed on and/or over protective film **110** at specific intervals. Color filter layers **112** can serve to pass red (R), green (G), and blue (B) light in a specific wavelength band therethrough, respectively. Planarization layer **114** can be formed on and/or over the entire surface of the semiconductor substrate **100** including respective color filter layers **112** and serve to adjust a focal length on and/or over color filter layers **112** and to ensure flatness for forming a lens layer. Micro lenses **116** can be formed having a convex shape of a specific curvature on and/or over planarization layer **114** and can correspond to the respective photodiodes **102**. Micro lenses **116** can serve to concentrate a larger amount of light on and/or over photodiodes **102** through color filter layers **112** according to the wavelength when natural light is illuminated. The curvature and height of micro lenses **116** can be determined with regard to various factors such as a focus of concentrated light.

**[0018]** As illustrated in example FIGS. **2** and **3**, light **50** which is projected from a light source onto the image sensor in accordance with embodiments can be collected in micro lenses **116**. The collected light passes through planarization layer **114** and is filtered through color filter layers **112**. Then, the light passes through protective film **110** and interlayer insulating film **108** and reaches photodiodes **102**. Light **105** reflected from photodiodes **102** can return to photodiodes **102** after being reflected by reflective films **106**.

**[0019]** Hereinafter, a manufacturing method, configuration and operation of the image sensor in accordance with embodiments will be described with reference to the accompanying drawings.

**[0020]** As illustrated in example FIG. **4**A, a plurality of photodiodes **102** can be formed in semiconductor substrate **100**. Photodiodes **102** can alternatively be formed on and/or over semiconductor substrate **100**. Insulating film **104**A can then be formed on and/or over semiconductor substrate **100** including photodiodes **102**. Insulating film **104**A can be formed of an oxide film.

**[0021]** As illustrated in example FIGS. **4**B to **4**D, a hard mask pattern corresponding to photodiodes **102** can then be formed on and/or over insulating film **104**A as follows. Layer **200** for hard mask pattern **200**A can be formed on and/or over insulating film **104**A. Layer **200** for hard mask pattern **200**A can be made of silicon nitride (SiN). Photoresist film pattern **300** can then be formed on and/or over layer **200** to expose a region of photodiodes **102**. Hard mask pattern **200**A can then be formed through a photolithography process using photoresist film pattern **300**. When hard mask pattern **200**A has been formed as described above, photoresist film pattern **300** can be removed by ashing.

**[0022]** As illustrated in example FIGS. **4**E and **4**F, insulating film **104**A can then be wet-etched using hard mask pattern **200**A as an etching mask to form reflective film frames **104** having a width decreasing from bottom to top. The wet etching for forming reflective film frames **104** can be performed at a temperature of 80~160° C. using a phosphoric acid solution of 10 to 90%. When reflective film frames **104** have been formed, hard mask pattern **200**A can be removed.

**[0023]** As illustrated in example FIG. **4**G, reflective film layer **106**A can then be formed on and/or over entire surface of the semiconductor substrate **100** to cover the reflective film frames **104**. Reflective film layer **106**A can be made of a metal material and can be formed by any metal film deposition method for forming a metal film used in a process of manufacturing a semiconductor device. Preferably, reflective film layer **106**A can be formed by a chemical vapor deposition (CVD) method or a physical vapor deposition (PVD) method.

**[0024]** As illustrated in example FIG. **4**H, photoresist film pattern **400** for forming reflective films **106** can then be formed on and/or over reflective film layer **106**A. Reflective film layer **106**A can then be selectively removed by a photolithography process using photoresist film pattern **400** as an etching mask, thereby forming reflective films **106** having openings positioned above photodiodes **102** to receive light. When reflective films **106** have been formed, photoresist film pattern **400** can then be removed by ashing. Since reflective film frames **104** are formed by wet etching having a conical shape with bent sidewalls inclined relative to the upper most surface of photodiodes **102** and/or substrate **100**, reflective films **106** can also have a shape conforming or otherwise corresponding to the shape of the sidewalls of reflective film frames **104**.

**[0025]** As illustrated in example FIGS. **4**A to **4**H, after reflective films **106** are formed, the image sensor can be completed by a method of manufacturing an image sensor. For example, in a case where the image sensor is manufactured as illustrated in example FIG. **2**, the method of manufacturing an image sensor is explained as follows. Interlayer insulating film **108** can be formed on and/or over semiconductor substrate **100** including reflective films **106**. After interlayer insulating film **108** is formed, protective film **110** can then be formed on and/or over interlayer insulating film **108**. After protective film **110** is formed, a plurality of color filter layers **112** can then be formed on and/or over protective film **110** at specific intervals. For example, red, green and blue color filter layers **112** can be formed to filter light according to the wavelength band by performing a coating and patterning process on and/or over protective film **110** using dyeable resist. After color filter layers **112** are formed, planarization layer **114** can then be formed on and/or over entire surface of color filter layers **112**. After planarization layer **114** is formed, micro lenses **116** can be formed on and/or over planarization layer **114** corresponding to photodiodes **102**. There are various methods for forming micro lenses **116**. For

example, a material layer for micro lenses, such as resist or SiON, is deposited on and/or over planarization layer **114**, and the deposited material layer for micro lenses is selectively patterned and reflowed corresponding to photodiodes **102**, thereby forming micro lenses **116**. For example, as illustrated in example FIG. **2**, micro lenses **116** can be formed in a hemispherical shape. In this case, micro lenses **116** can be formed to have an optimal size, thickness and radius of curvature, which are determined according to the size, position and shape of a unit pixel, the thickness of light sensing devices **102**, the height, position and size of a light blocking layer, and the like.

**[0026]** Although embodiments have been described with reference to a number of illustrative embodiments thereof, it should be understood that numerous other modifications and embodiments can be devised by those skilled in the art that will fall within the spirit and scope of the principles of this disclosure. More particularly, various variations and modifications are possible in the component parts and/or arrangements of the subject combination arrangement within the scope of the disclosure, the drawings and the appended claims. In addition to variations and modifications in the component parts and/or arrangements, alternative uses will also be apparent to those skilled in the art.

What is claimed is:

**1**. A method of manufacturing an image sensor comprising:
forming an insulating film on a semiconductor substrate having a plurality of photodiodes; and then
forming a hard mask pattern corresponding to the photodiodes on the insulating film; and then
forming a reflective film frame on a respective one of the photodiodes by wet etching the insulating film using the hard mask pattern as an etching mask, the reflective film frame having sidewalls that are inclined with respect to the uppermost surface of the photodiodes; and then
removing the hard mask pattern; and then
forming a reflective film layer on the semiconductor substrate including the reflective film frames; and then
forming a reflective film on the sidewalls of the reflective film frame by selectively removing the reflective film layer through a photolithography process, the reflective film including an opening positioned above the photodiodes to receive light.

**2**. The method of claim **1**, further comprising:
forming an interlayer insulating film on the semiconductor substrate including the reflective film; and then
forming a protective film on the interlayer insulating film; and then
forming a plurality of color filter layers on the protective film at specific intervals; and then
forming a planarization layer on the semiconductor substrate including color filter layers; and then
forming a micro lens on the planarization layer corresponding to a respective one of the photodiodes.

**3**. The method of claim **1**, wherein the reflective film layer is composed of a metal material.

**4**. The method of claim **1**, wherein the hard mask pattern is composed of silicon nitride.

**5**. The method of claim **1**, wherein forming the reflective film frame comprises performing the wet etching at a temperature of between 80 to 160° C. using a phosphoric acid solution at a concentration between 10 to 90%.

**6**. The method of claim **1**, wherein the insulating film is composed of an oxide material.

**7**. The method of claim **1**, wherein forming the reflective film comprises:
forming a photoresist film pattern on the reflective film layer; and then
forming the opening by selectively removing the reflective film layer through a photolithography process using the photoresist film pattern as an etching mask; and then
removing the photoresist film pattern by ashing.

**8**. The method of claim **7**, wherein the opening occupies 70 to 90% of an uppermost surface area of a respective one of the photodiodes.

**9**. An image sensor comprising:
a plurality of photodiodes formed on a semiconductor substrate;
a reflective film frame formed on the photodiodes, the reflective film frame having sidewalls that are inclined with respect to the uppermost surface of the photodiodes; and
a reflective film formed on the sidewalls of the reflective film frames to form an opening over a respective one of the photodiodes for receiving light.

**10**. The image sensor of claim **9**, further comprising:
an interlayer insulating film formed on the semiconductor substrate including the reflective film;
a protective film formed on the interlayer insulating film;
a plurality of color filter layers formed on the protective film at specific intervals;
a planarization layer formed on the semiconductor substrate including the color filter layers; and
a micro lens formed on the planarization layer corresponding to a respective one of the photodiodes.

**11**. The image sensor of claim **9**, wherein the reflective films are composed of a metal material.

**12**. The image sensor of claim **9**, wherein the opening occupies between 70 to 90% of an uppermost surface area of a respective one of the photodiodes.

**13**. The image sensor of claim **9**, wherein the reflective film frame is composed of an oxide material.

**14**. The image sensor of claim **10**, wherein the interlayer insulating film comprises a plurality of insulating layers.

**15**. The image sensor of claim **10**, wherein the color filter layers comprise red, green and blue color filter layers.

**16**. A method comprising:
providing a semiconductor substrate having a photodiode; and then
forming a reflective film frame on the photodiode, the reflective film frame having sidewalls that are inclined with respect to the uppermost surface of the photodiode; and then
forming an opening over the surface of the reflective film frame and corresponding to the photodiode by forming a reflective film on the sidewalls of the reflective film frame.

**17**. The method of claim **16**, further comprising:
forming an interlayer insulating film on the reflective film; and then
forming a protective film on the interlayer insulating film; and then
forming a color filter layer on the protective film; and then
forming a planarization layer on the color filter layer; and then
forming a micro lens on the planarization layer corresponding to the photodiode.

**18**. The method of claim **16**, wherein forming the reflective film comprises:

forming a photoresist film pattern on the reflective film layer; and then

forming the opening by selectively removing the reflective film layer through a photolithography process using the photoresist film pattern as an etching mask; and then

removing the photoresist film pattern by ashing.

**19**. The method of claim **16**, wherein the opening occupies 70 to 90% of an uppermost surface area of the photodiode.

**20**. The method of claim **16**, wherein forming the reflective film frame comprises performing a wet etching at a temperature of between 80 to 160° C. using a phosphoric acid solution at a concentration between 10 to 90%.

* * * * *