US008288836B2

(12) **United States Patent**
Oshiyama et al.

(10) **Patent No.: US 8,288,836 B2**
(45) **Date of Patent: Oct. 16, 2012**

(54) **SOLID STATE IMAGING DEVICE CAPABLE OF SUPRESSING GENERATION OF DARK CURRENT**

(75) Inventors: **Itaru Oshiyama**, Kanagawa (JP); **Takashi Ando**, Kanagawa (JP); **Susumu Hiyama**, Kanagawa (JP); **Tetsuji Yamaguchi**, Kanagawa (JP); **Yuko Ohgishi**, Tokyo (JP); **Harumi Ikeda**, Kanagawa (JP)

(73) Assignee: **Sony Corporation**, Tokyo (JP)

(*) Notice: Subject to any disclaimer, the term of this patent is extended or adjusted under 35 U.S.C. 154(b) by 0 days.

(21) Appl. No.: **12/244,889**

(22) Filed: **Oct. 3, 2008**
(Under 37 CFR 1.47)

(65) **Prior Publication Data**

US 2009/0096049 A1 Apr. 16, 2009

(30) **Foreign Application Priority Data**

Oct. 11, 2007 (JP) 2007-265287

(51) **Int. Cl.**
H01L 31/02 (2006.01)

(52) **U.S. Cl.** **257/432**; 257/291; 257/E27.133

(58) **Field of Classification Search** 257/432, 257/447, E31.127, 294, 435, 436, 438, 440, 257/291
See application file for complete search history.

(56) **References Cited**

U.S. PATENT DOCUMENTS

6,147,390 A 11/2000 Nakano et al.
2003/0025160 A1 * 2/2003 Suzuki et al. 257/347
2005/0202584 A1 * 9/2005 Mouli 438/48
2006/0033827 A1 2/2006 Kanbe et al.
2006/0244088 A1 11/2006 Inagaki et al.
2007/0034981 A1 * 2/2007 Saito 257/462
2007/0210395 A1 * 9/2007 Maruyama et al. 257/431

FOREIGN PATENT DOCUMENTS

JP 01-256168 10/1989
JP 05-335546 12/1993
JP 2005-093897 4/2005
JP 2006-269789 10/2006
JP 2007-088305 4/2007

OTHER PUBLICATIONS

Japanese Office Action issued on Feb. 8, 2011 in connection with JP counterpart application No. 2007-265287.
Supplementary European Search Report issued on Mar. 15, 2012, in connection with counterpart EP Application No. EP 07 79 2729.

* cited by examiner

Primary Examiner — Evan Pert
Assistant Examiner — Selim Ahmed
(74) *Attorney, Agent, or Firm* — SNR Denton US LLP

(57) **ABSTRACT**

A solid state imaging device having a light sensing section that performs photoelectric conversion of incident light includes: an insulating layer formed on a light receiving surface of the light sensing section; a layer having negative electric charges formed on the insulating layer; and a hole accumulation layer formed on the light receiving surface of the light sensing section.

18 Claims, 42 Drawing Sheets

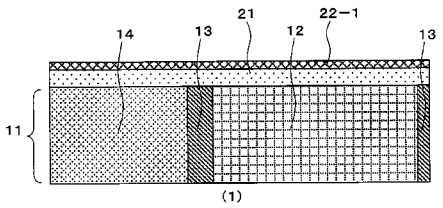

(1)

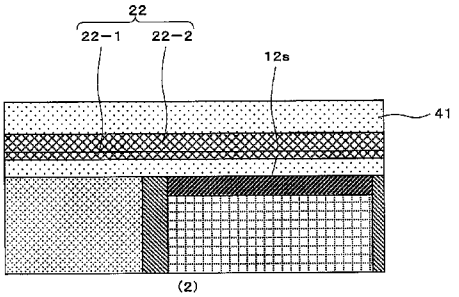

(2)

FIG. 1

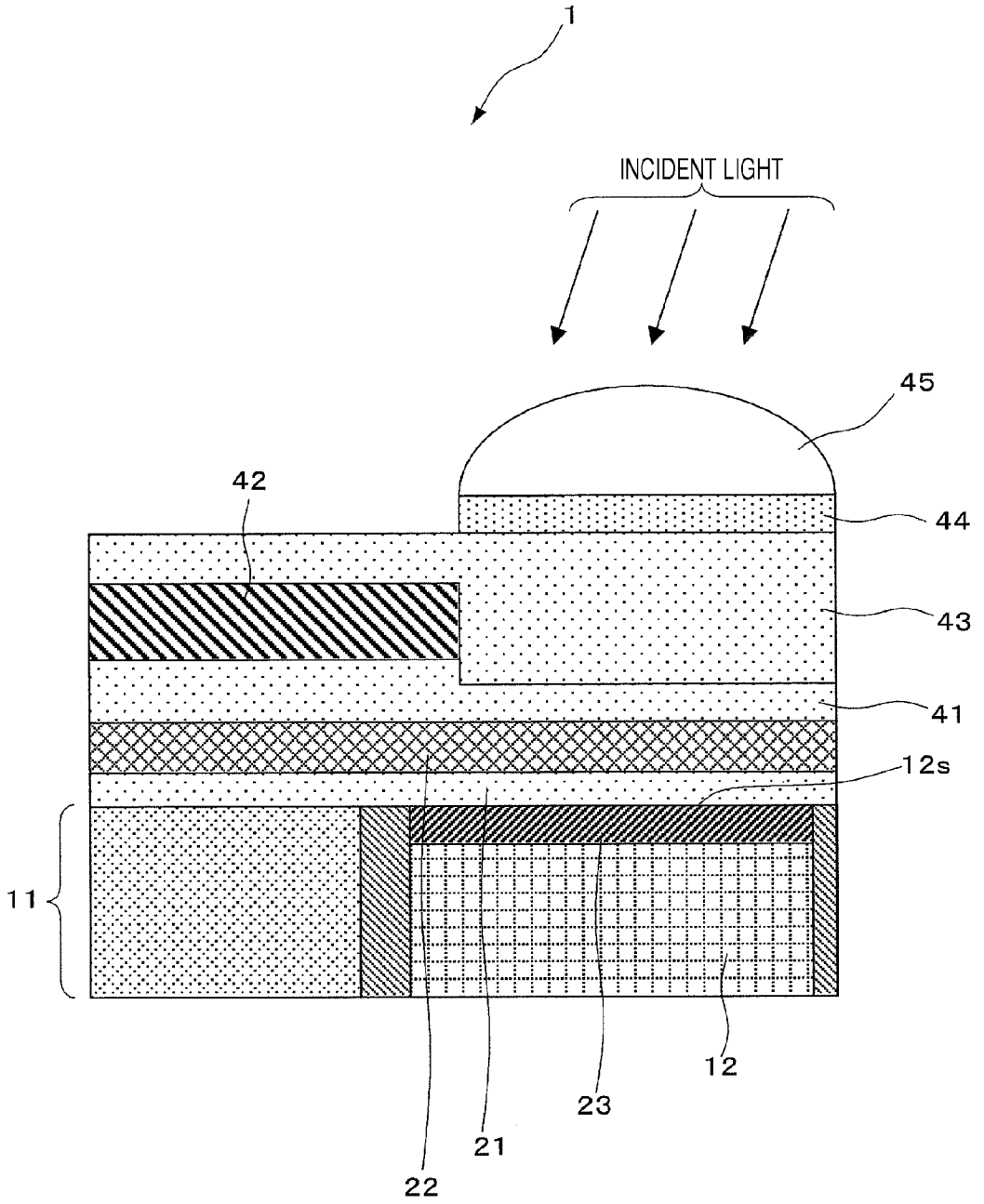

FIG. 2

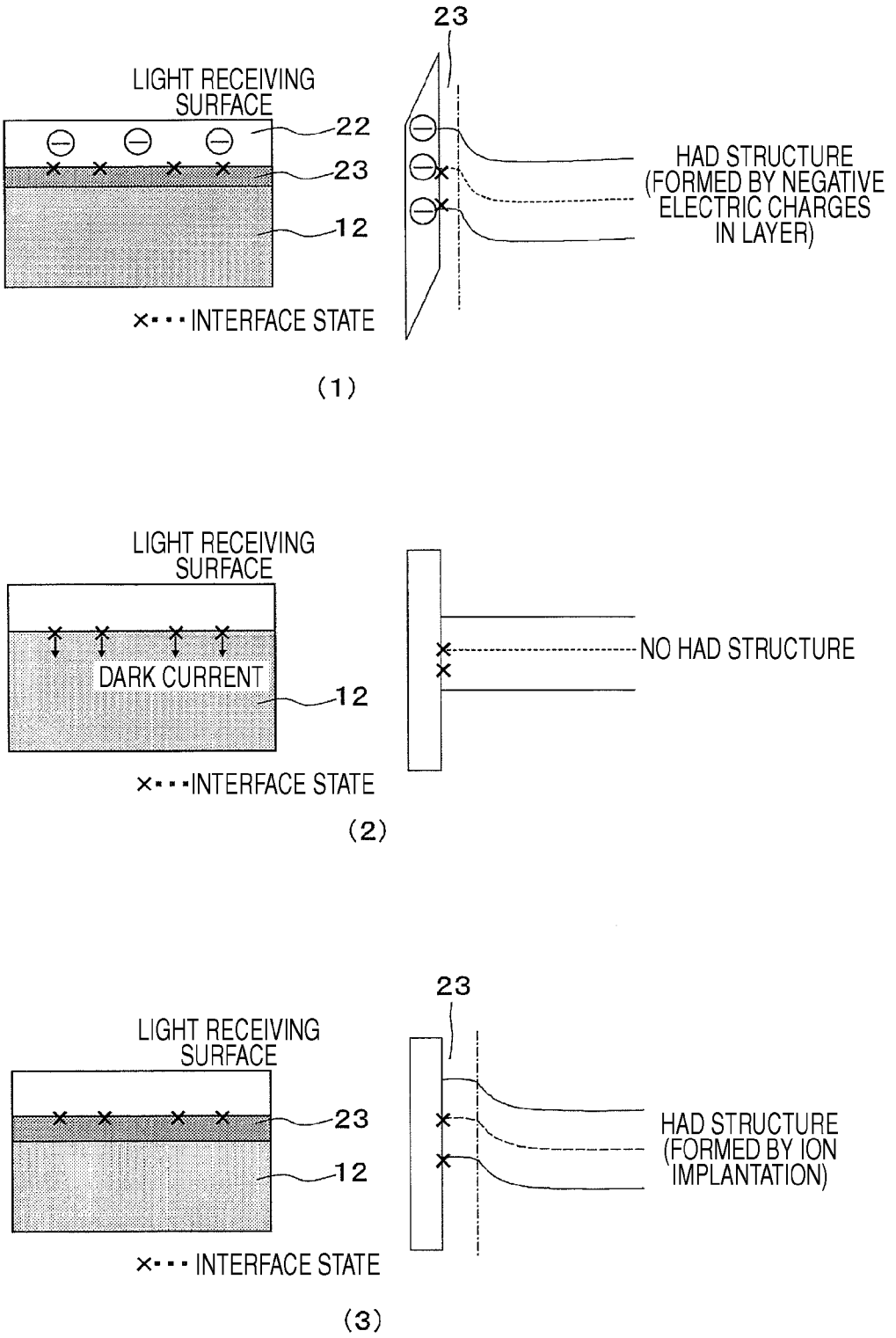
23
LIGHT RECEIVING SURFACE
22
23
12
HAD STRUCTURE (FORMED BY NEGATIVE ELECTRIC CHARGES IN LAYER)
×・・・INTERFACE STATE
(1)
LIGHT RECEIVING SURFACE
DARK CURRENT
12
NO HAD STRUCTURE
×・・・INTERFACE STATE
(2)
23
LIGHT RECEIVING SURFACE
23
12
HAD STRUCTURE (FORMED BY ION IMPLANTATION)
×・・・INTERFACE STATE
(3)

FIG. 3

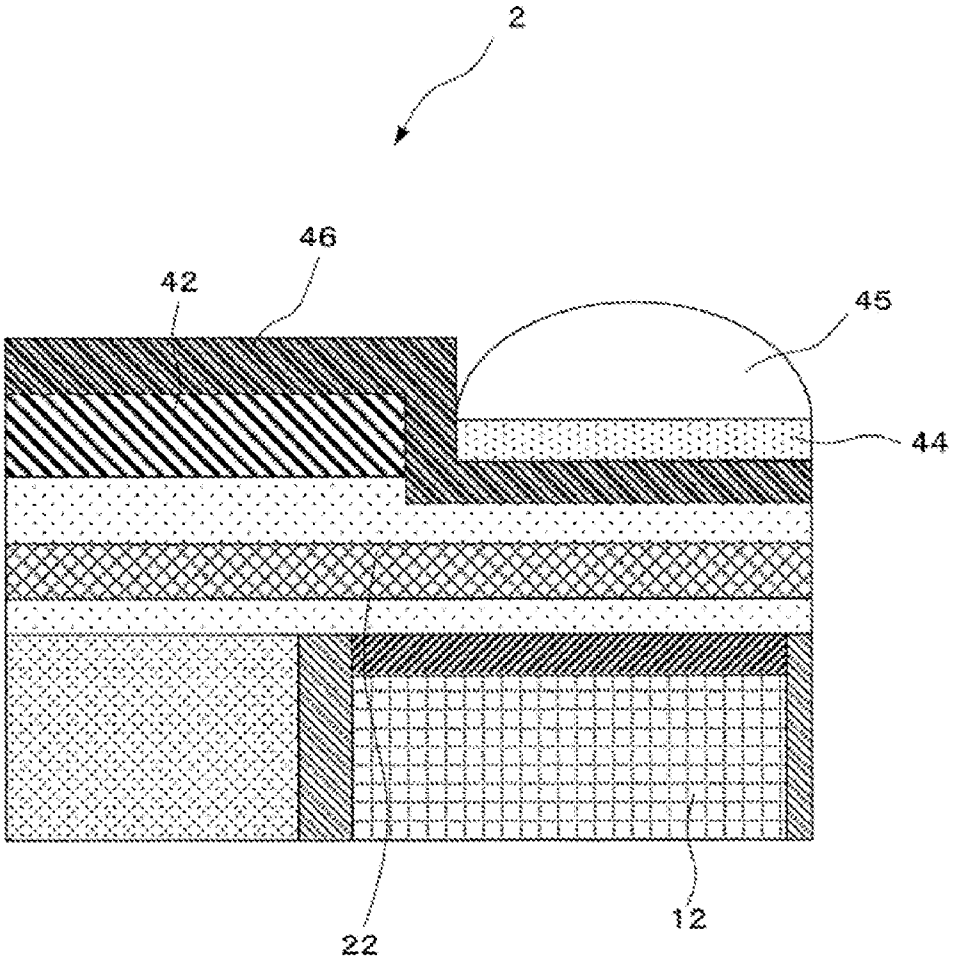

FIG. 4

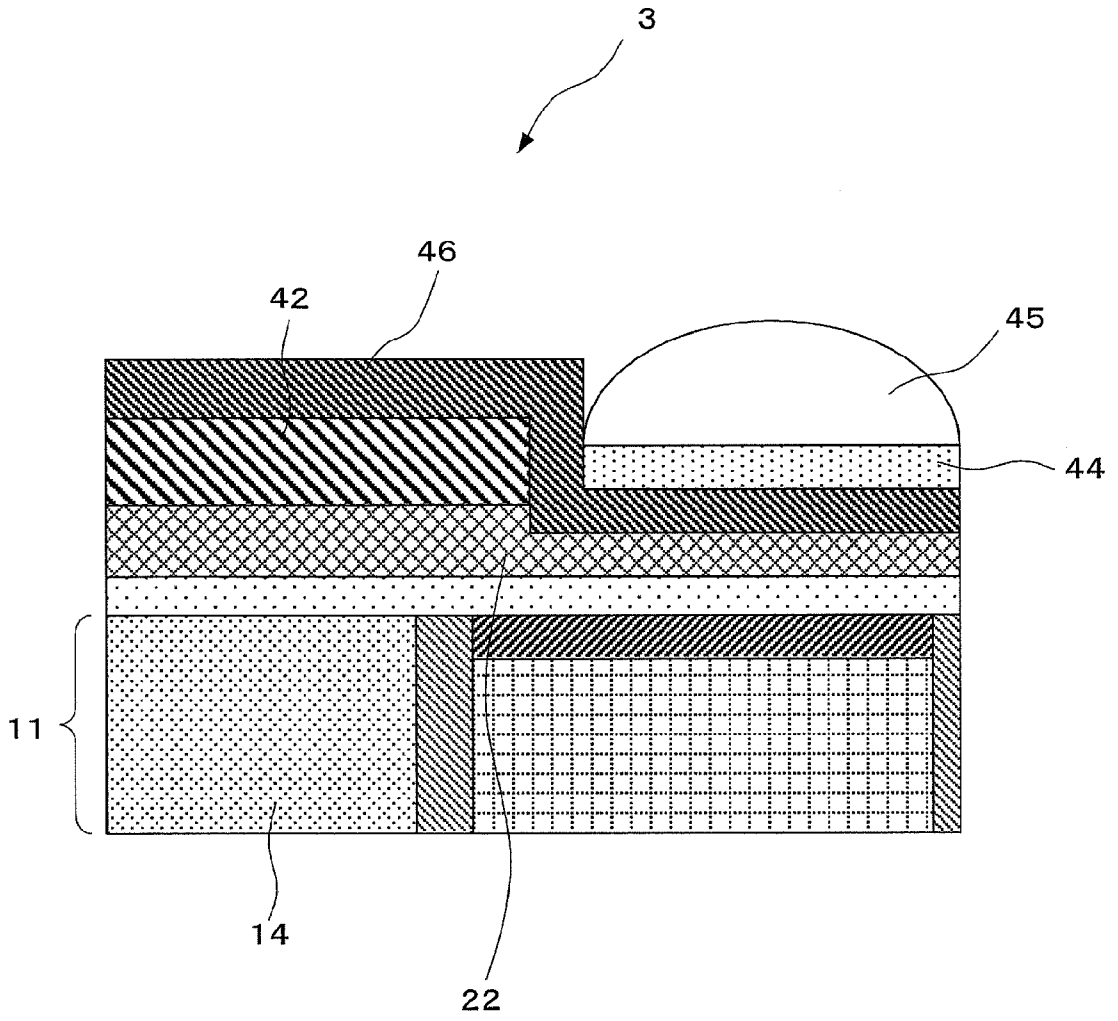

FIG. 5

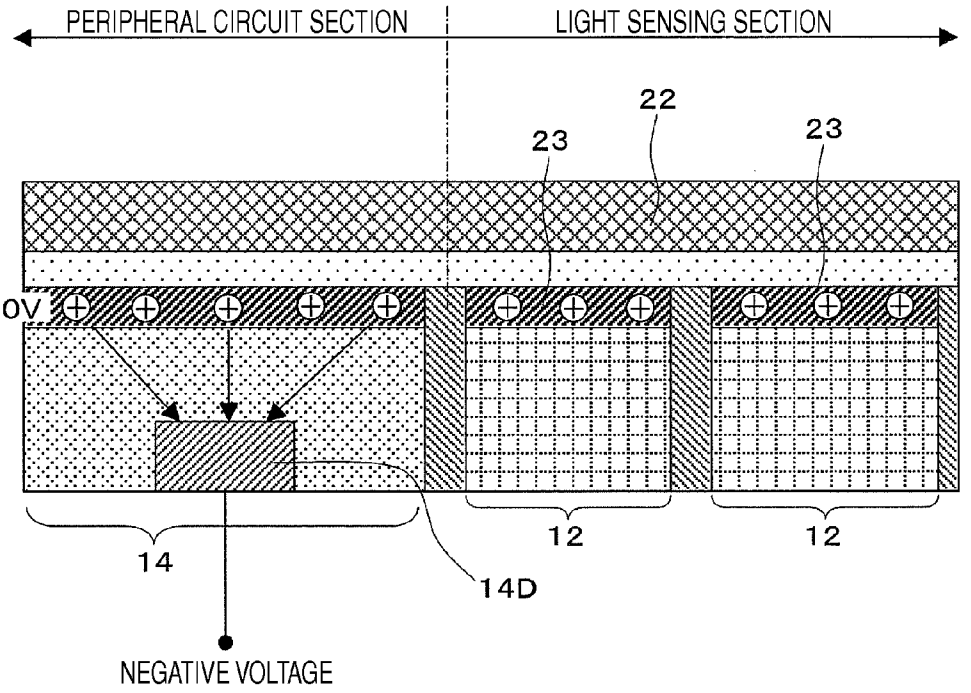
PERIPHERAL CIRCUIT SECTION
LIGHT SENSING SECTION
22
23
23
0V
14
12
12
14D
NEGATIVE VOLTAGE

FIG. 6

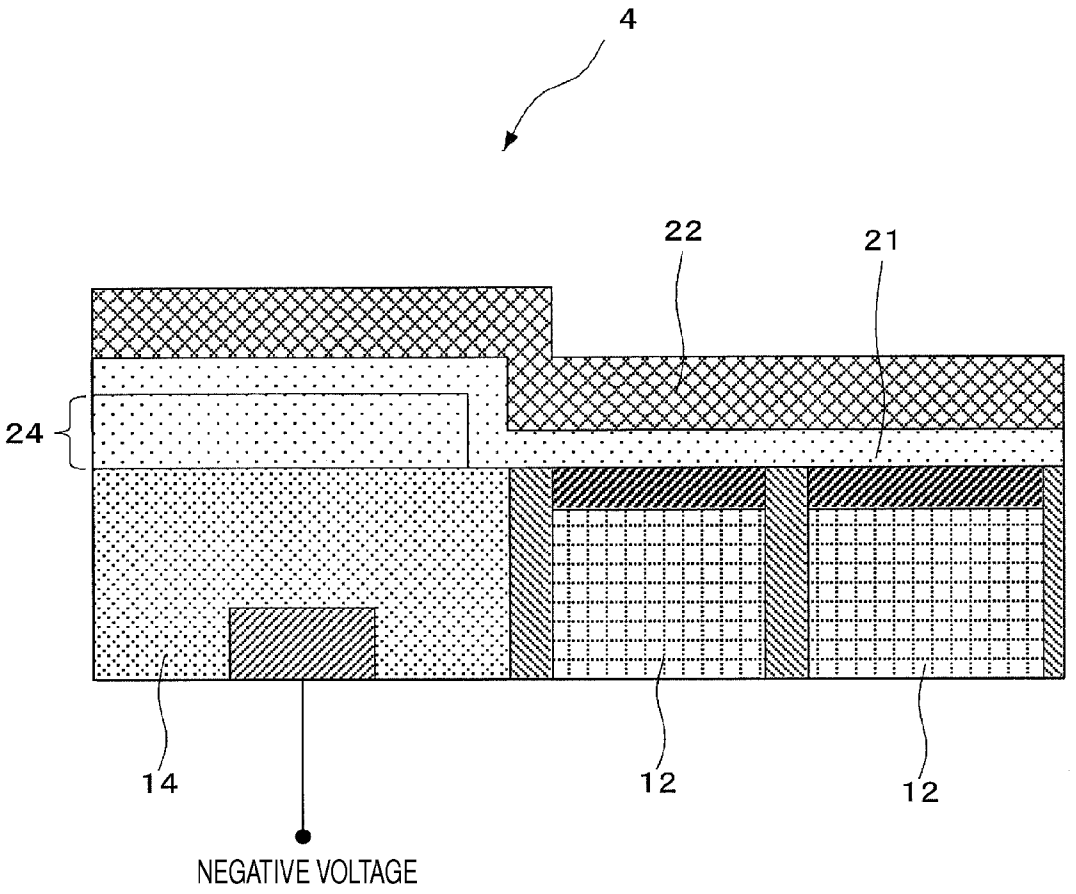

FIG. 7

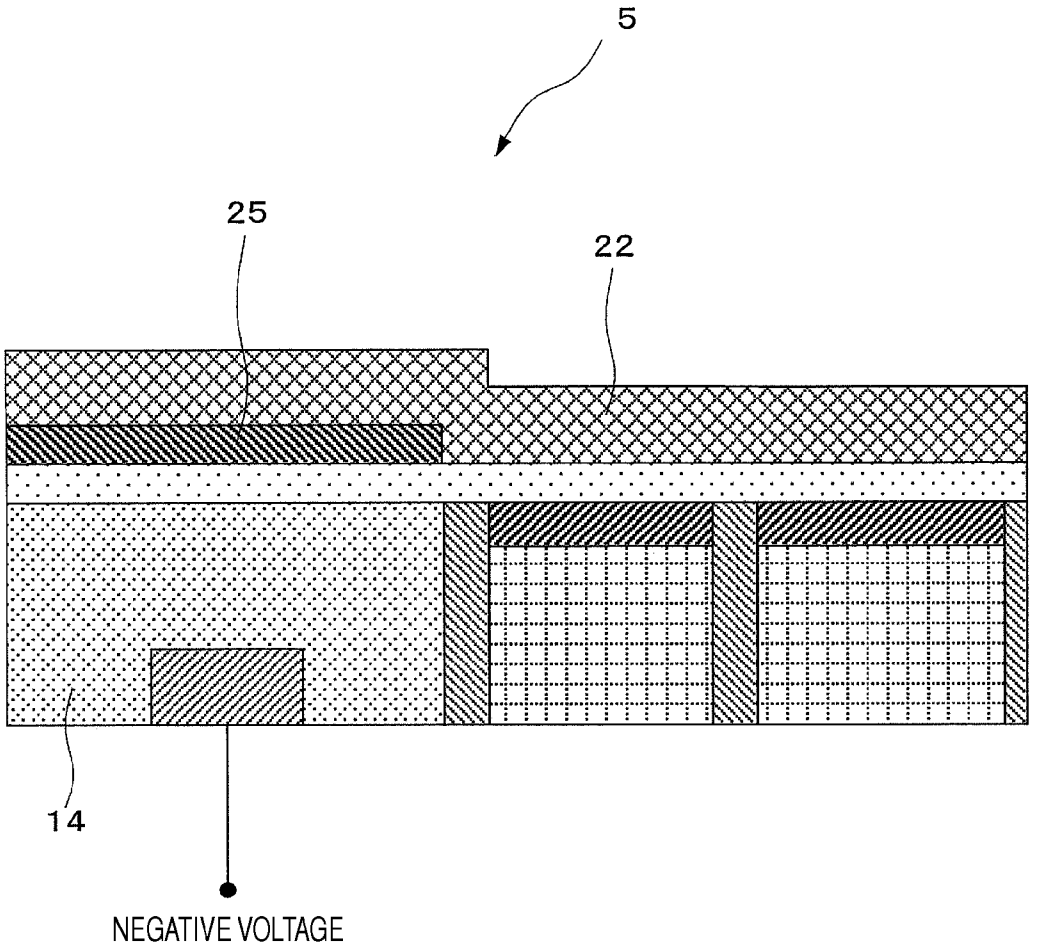

FIG. 8

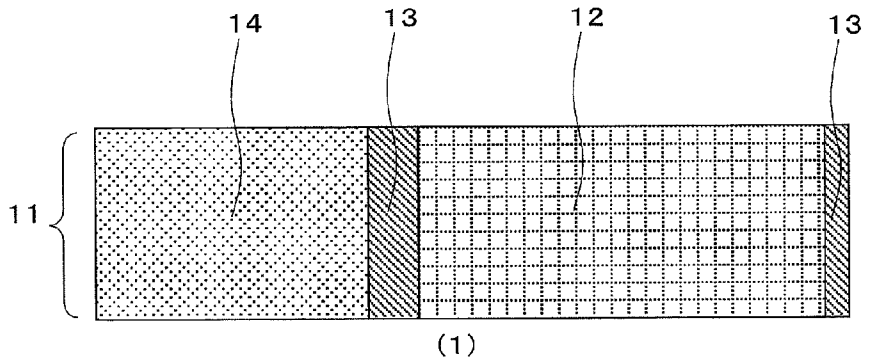

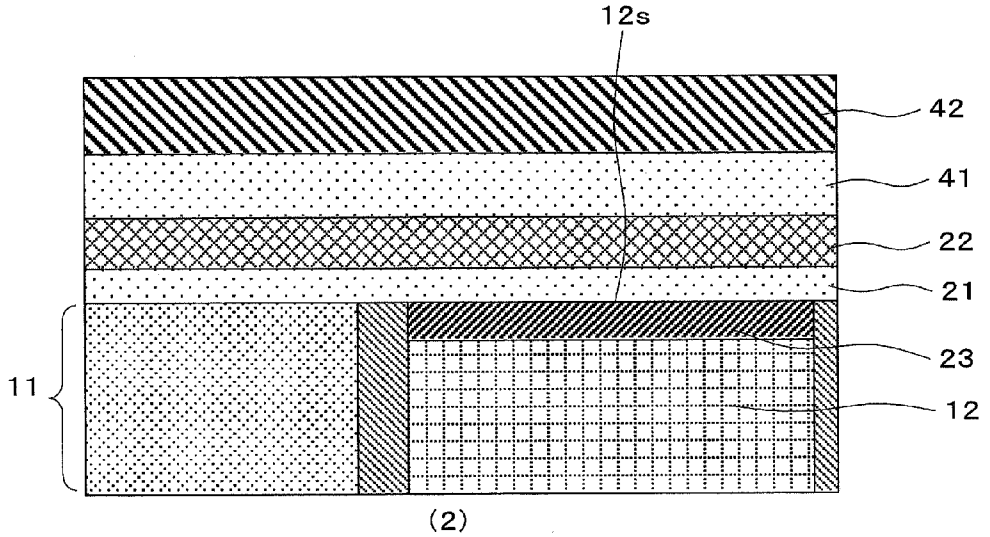

FIG. 9

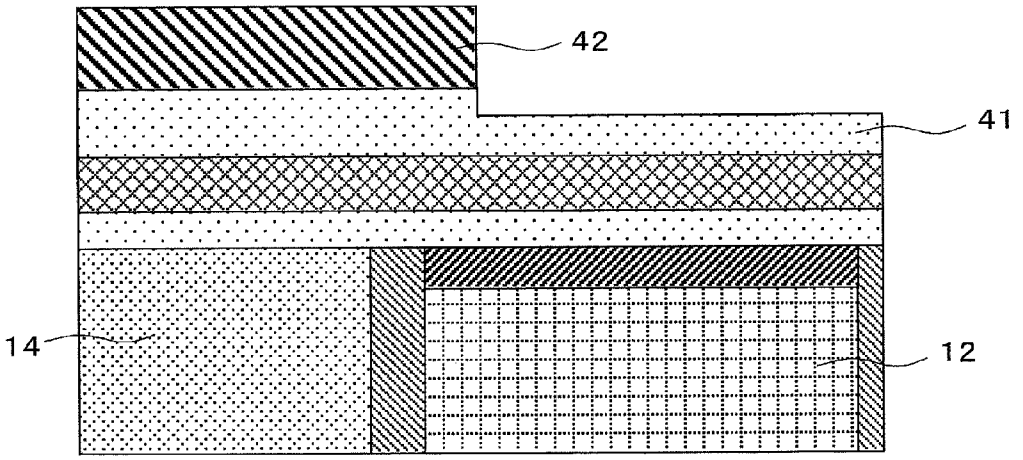

(3)

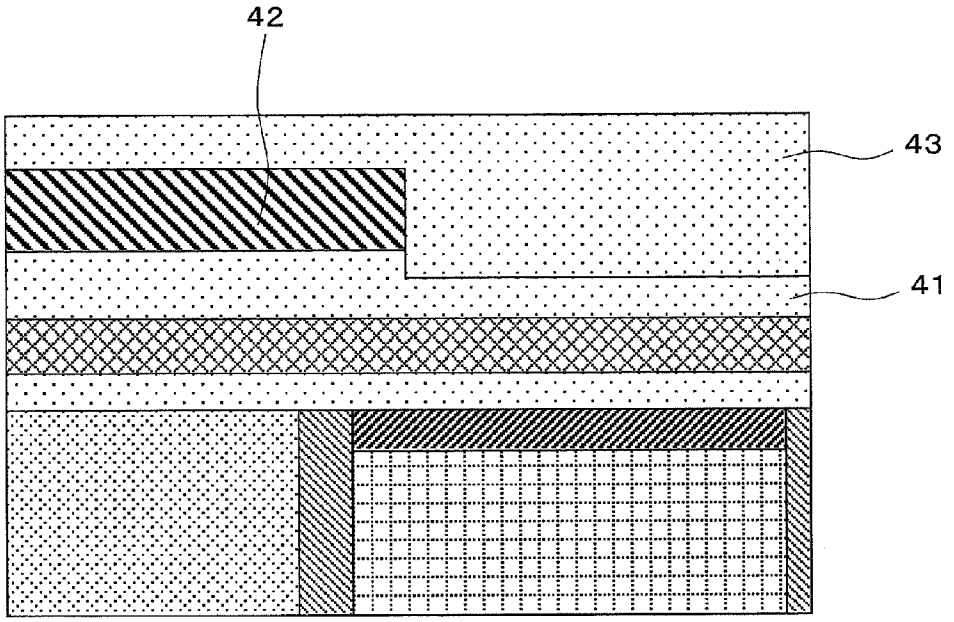

(4)

FIG. 10

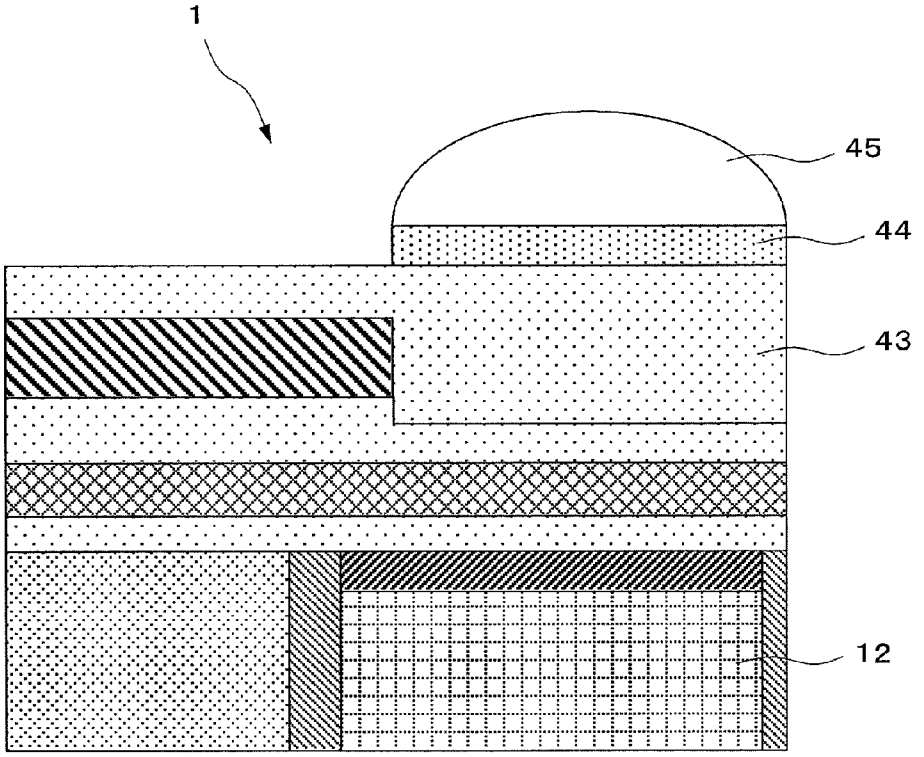

(5)

FIG. 11

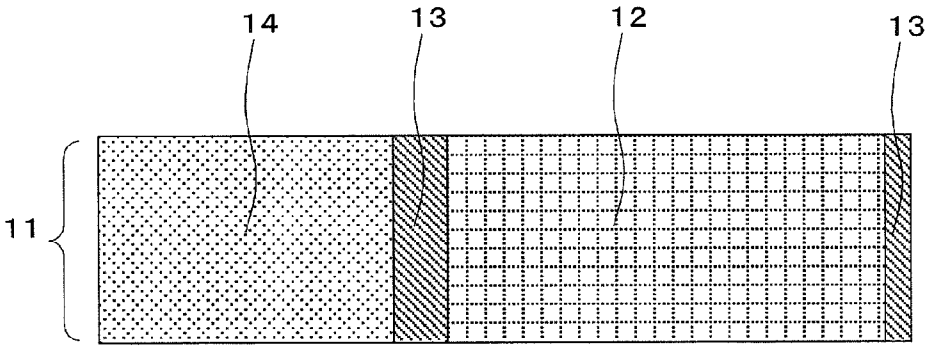

(1)

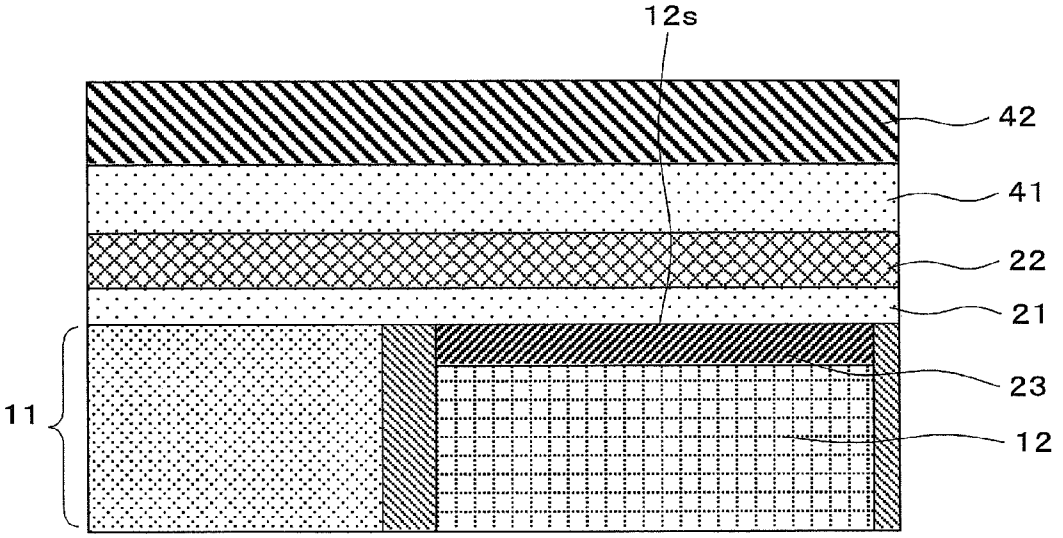

(2)

FIG. 12

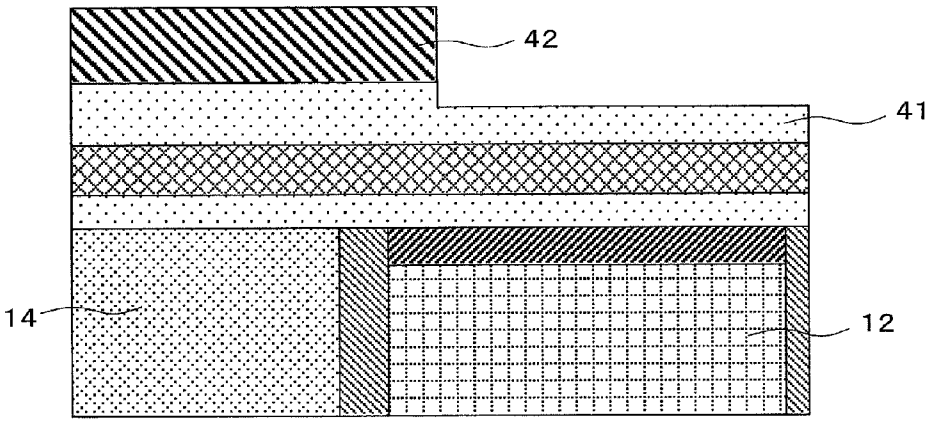

(3)

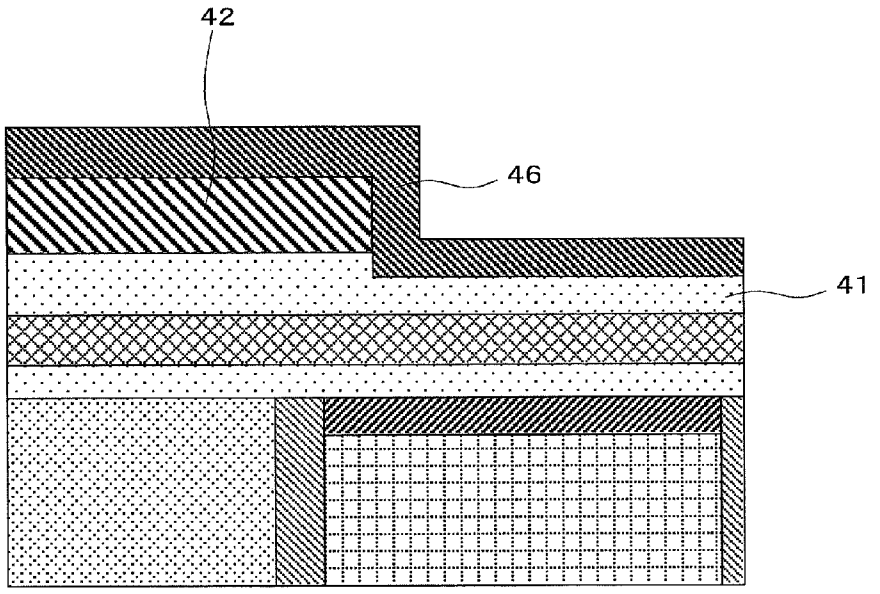

(4)

FIG. 13

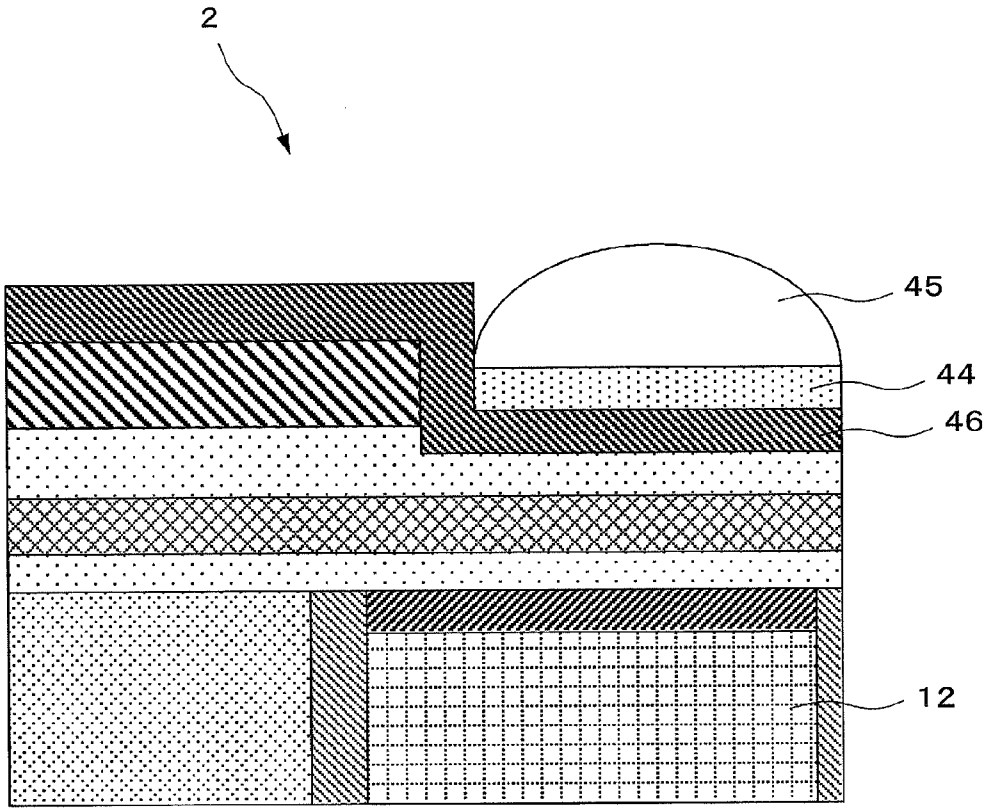

(5)

FIG. 14

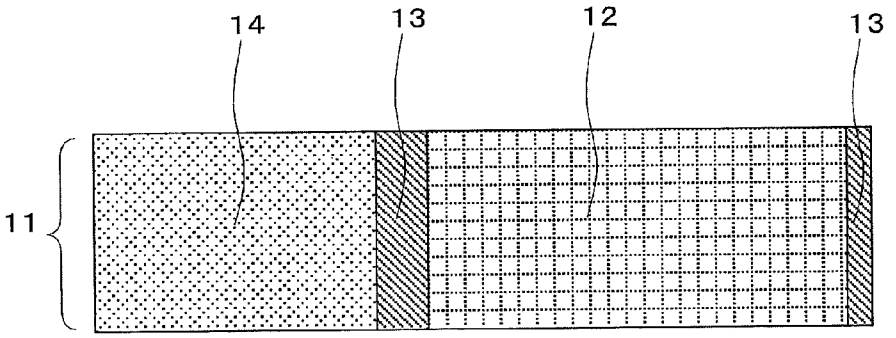

(1)

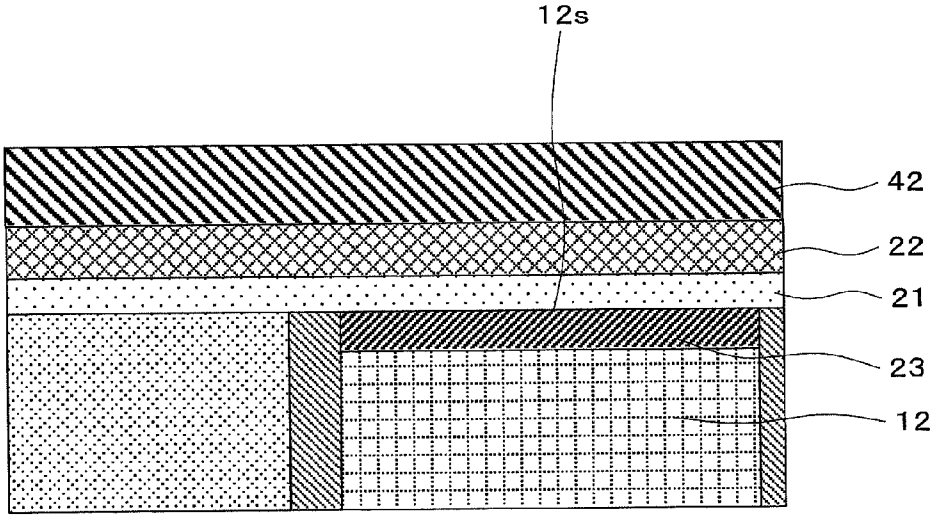

(2)

FIG. 15

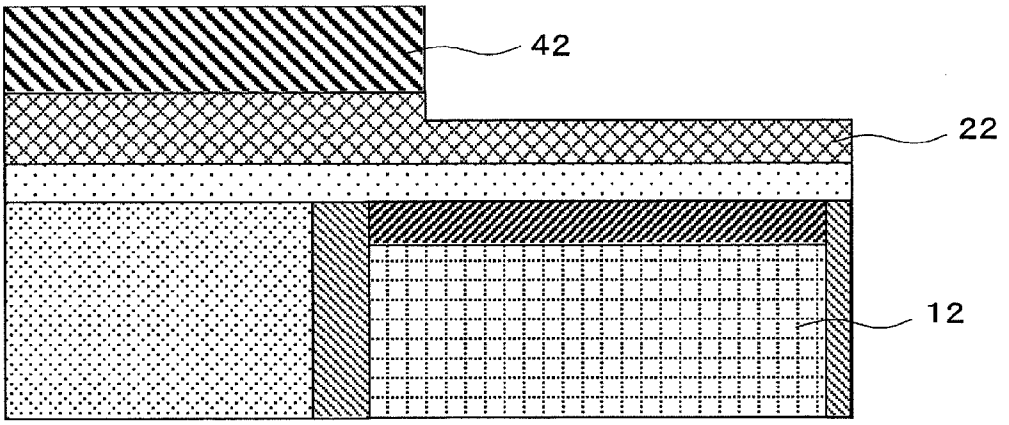

(3)

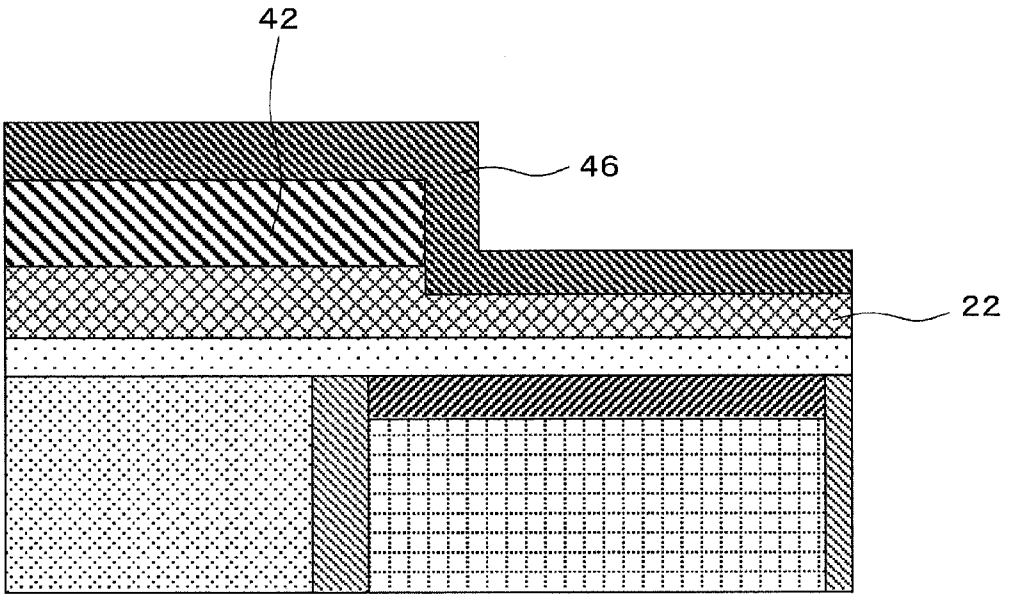

(4)

FIG. 16

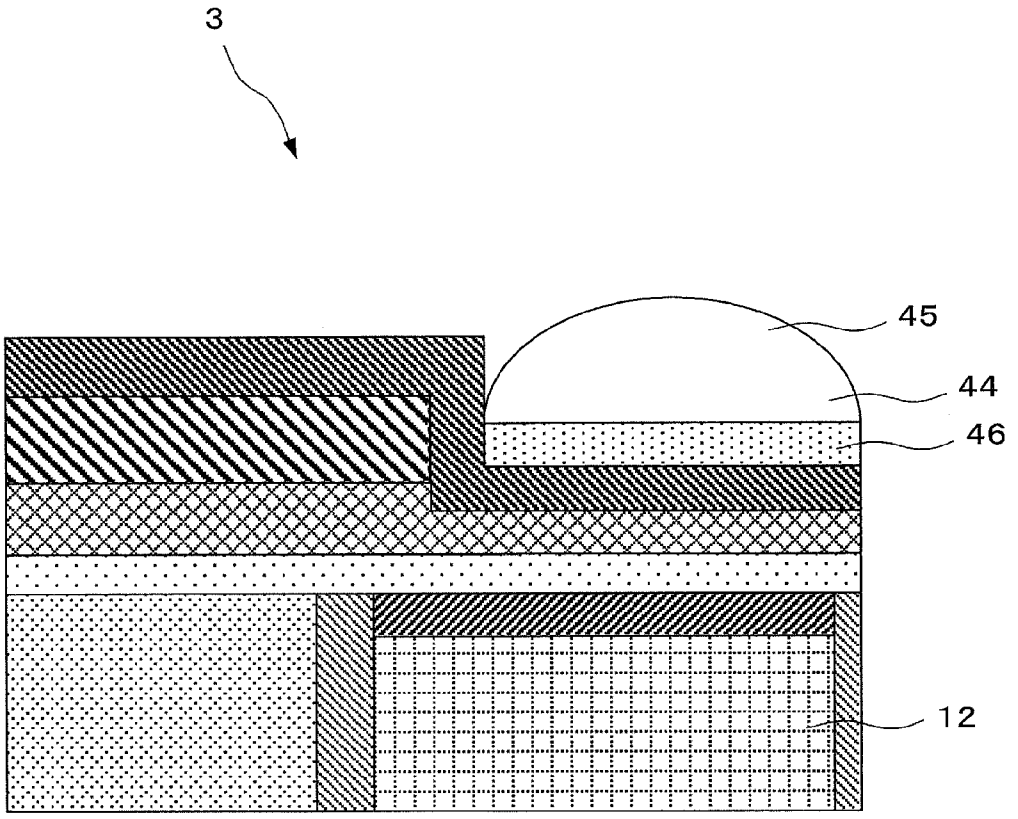

(5)

FIG. 17

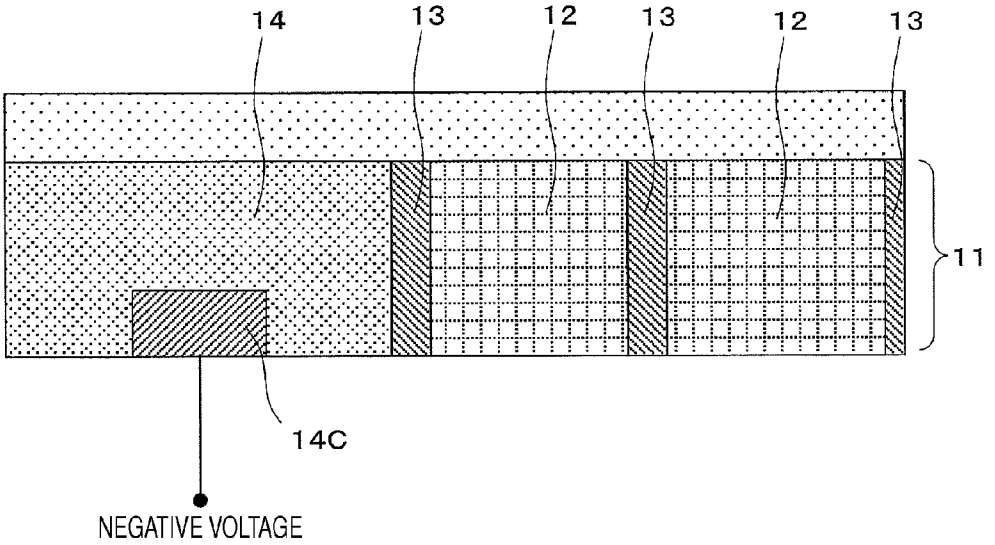
14
13
12
13
12
13
11
14C
NEGATIVE VOLTAGE

(1)

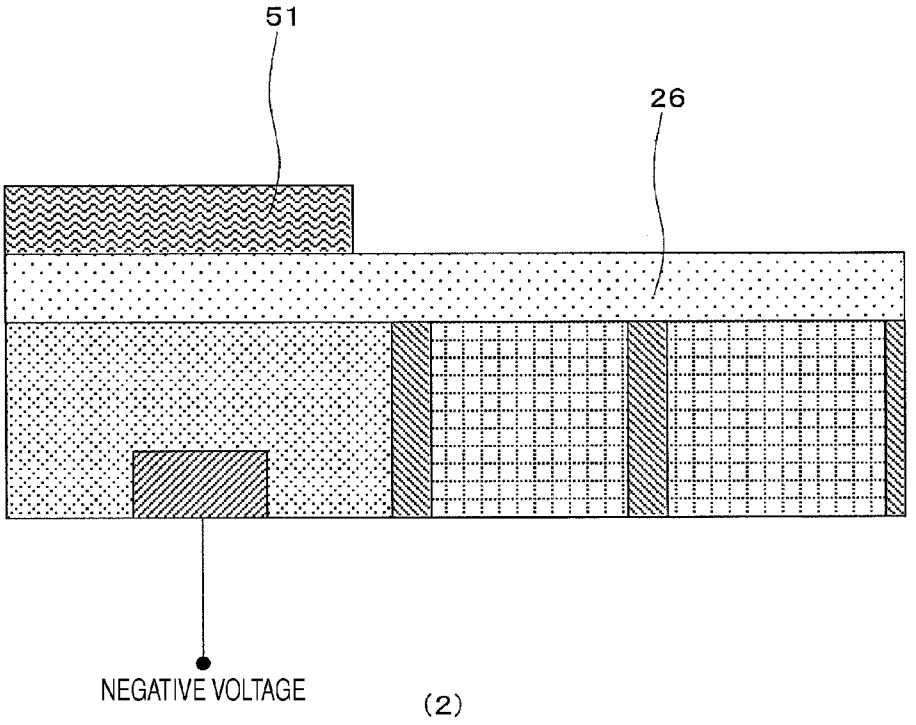
51
26
NEGATIVE VOLTAGE

(2)

FIG. 18

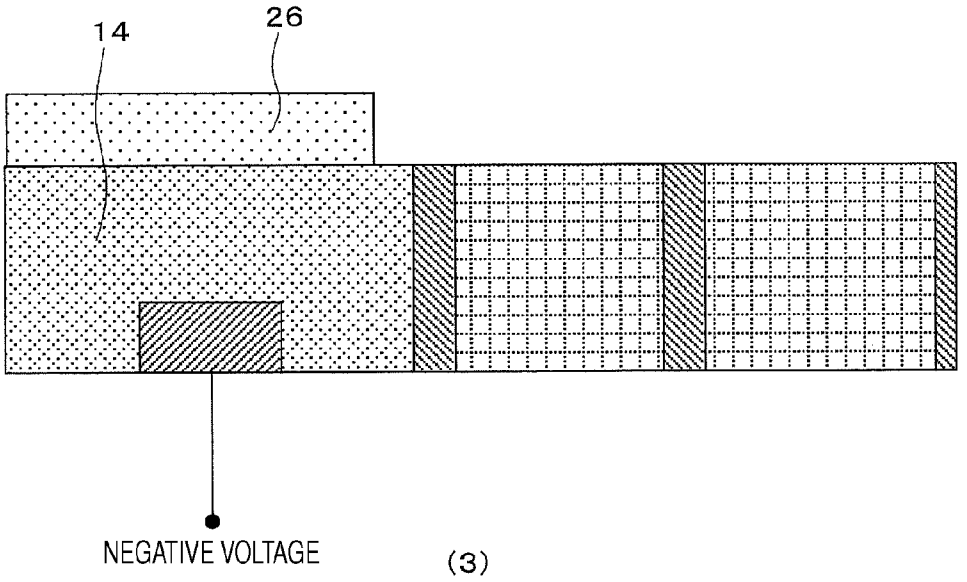
14
26
NEGATIVE VOLTAGE
(3)

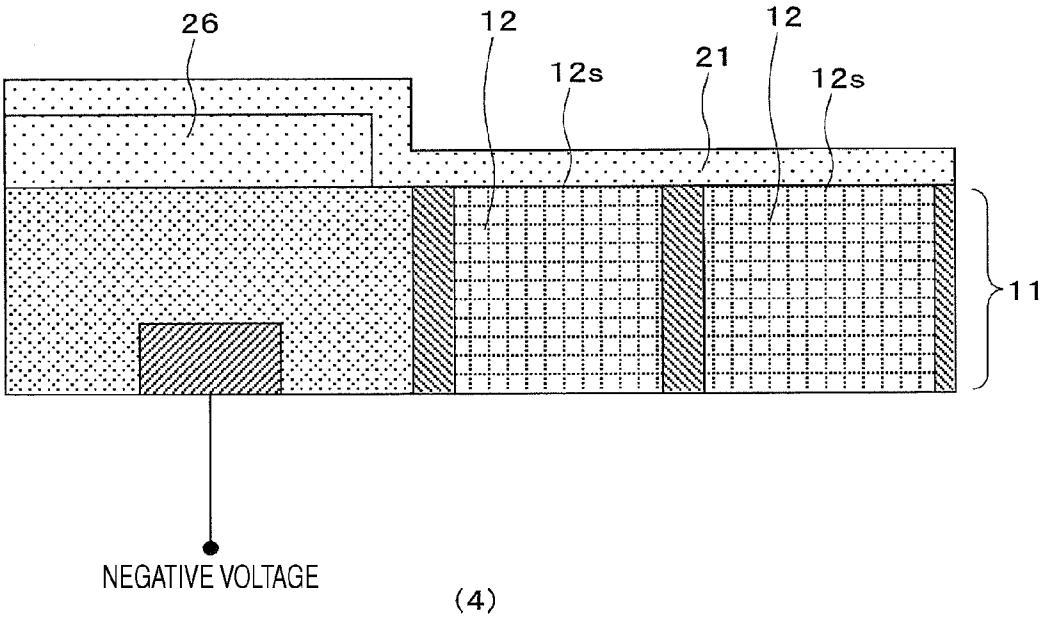
26
12
12s
21
12
12s
11
NEGATIVE VOLTAGE
(4)

FIG. 19

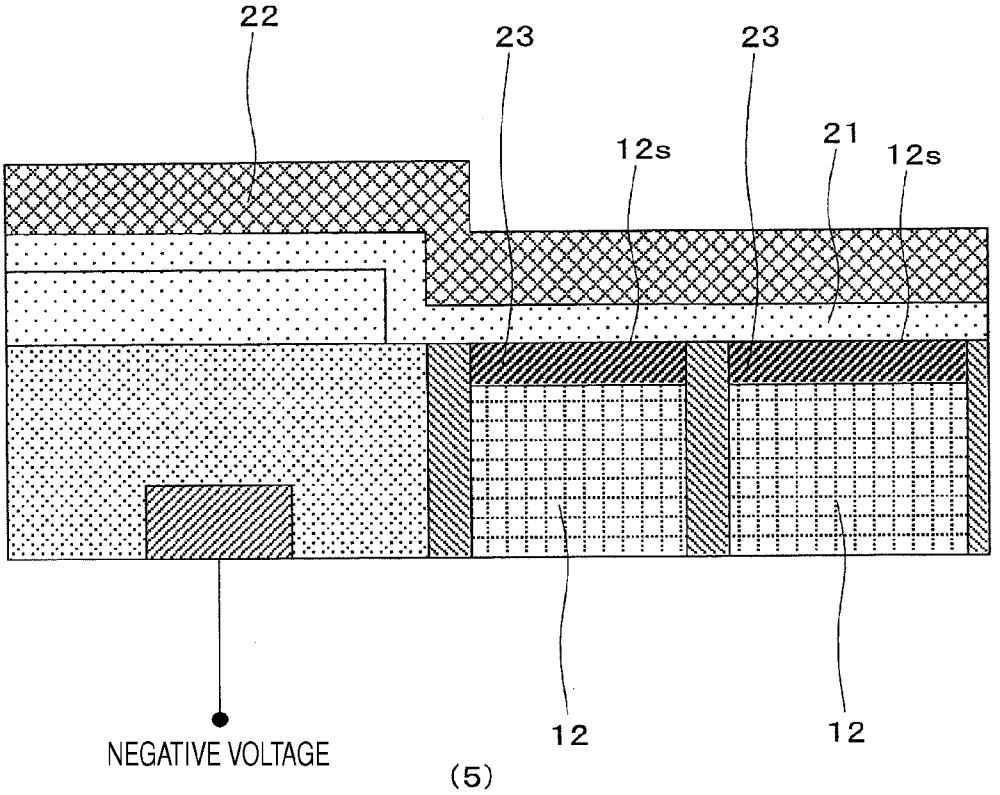

FIG. 20

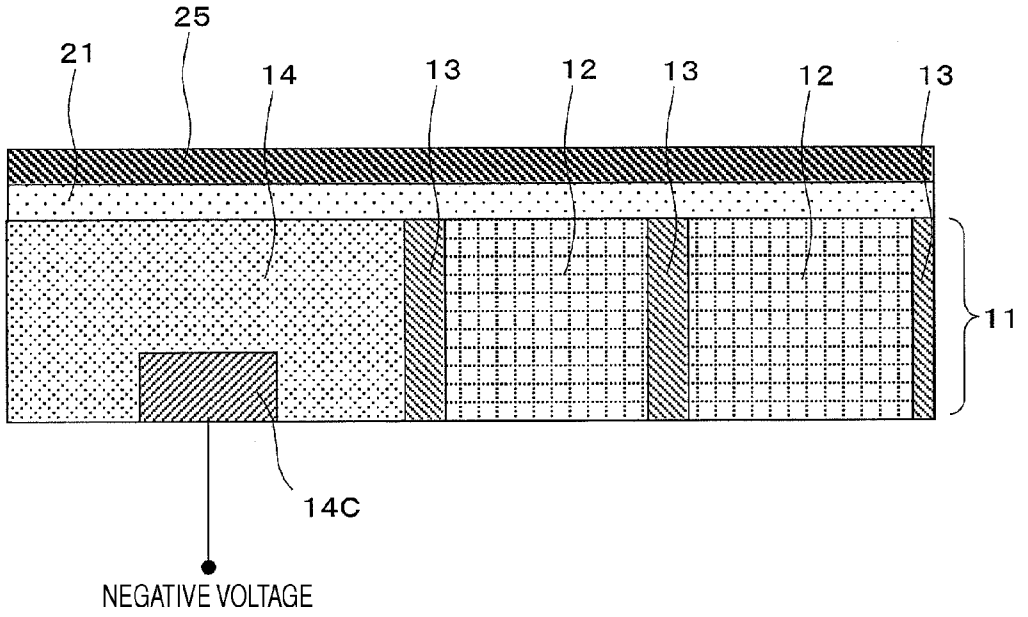
25
21
14
13
12
13
12
13
11
14C
NEGATIVE VOLTAGE

(1)

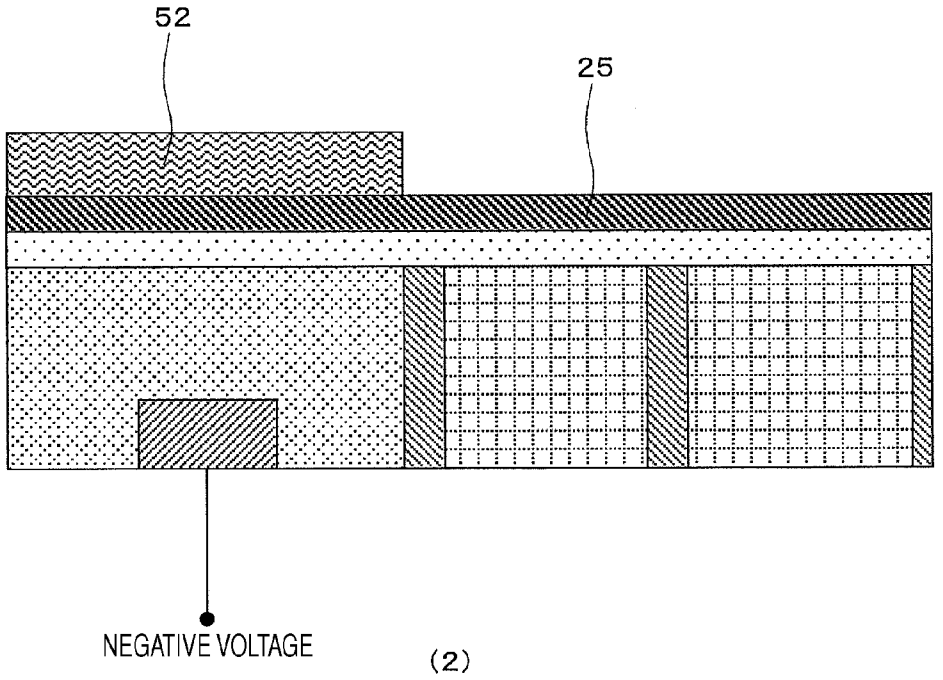
52
25
NEGATIVE VOLTAGE

(2)

FIG. 21

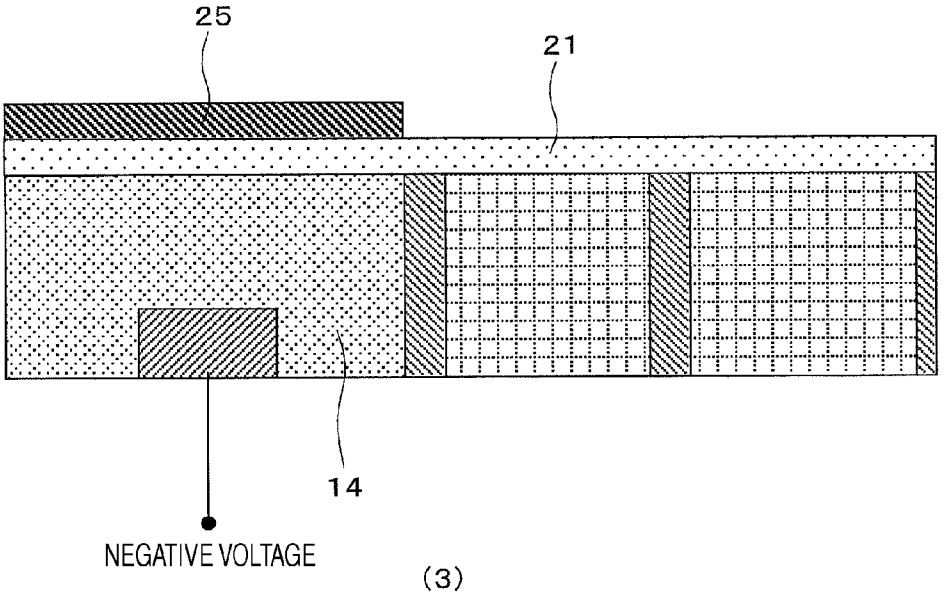
25
21
14
NEGATIVE VOLTAGE
(3)

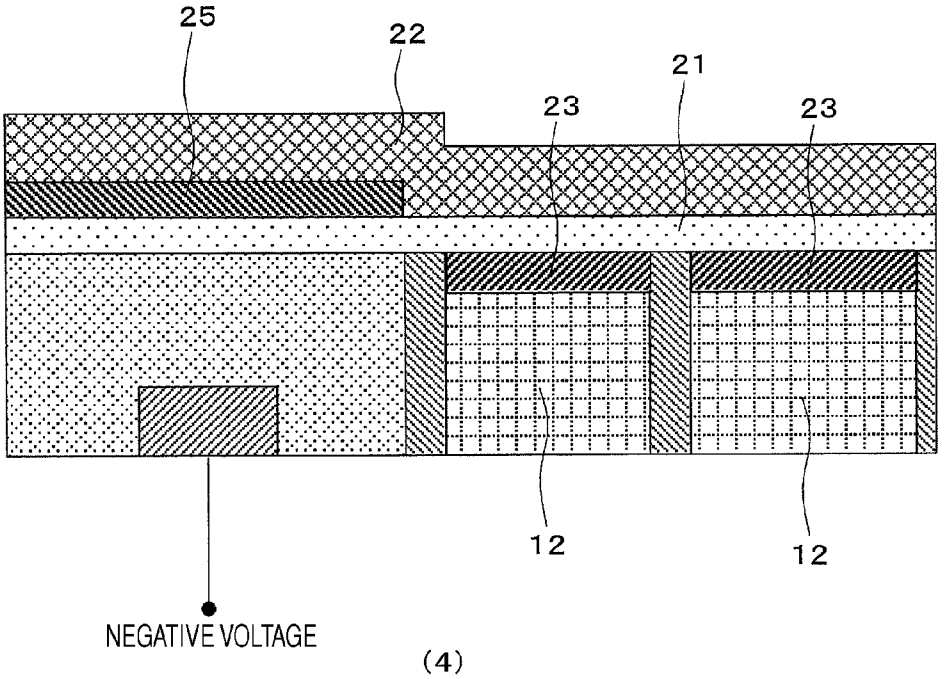
25
22
21
23
23
12
12
NEGATIVE VOLTAGE
(4)

FIG. 22

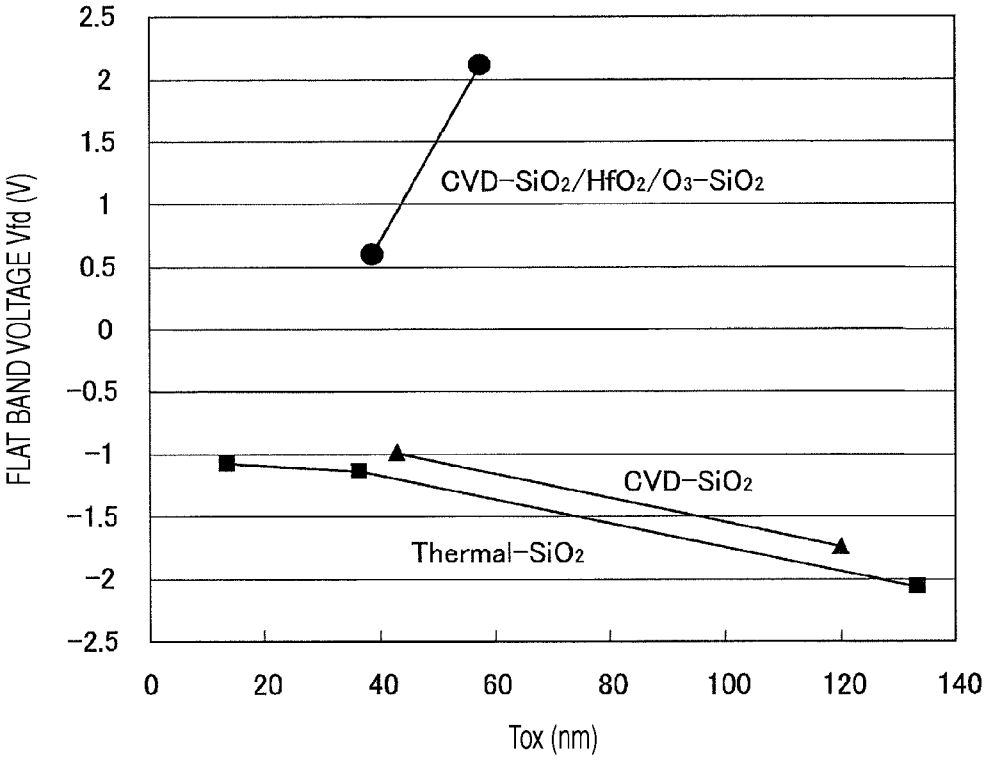
2.5
2
1.5
1
0.5
0
−0.5
−1
−1.5
−2
−2.5
FLAT BAND VOLTAGE Vfd (V)
CVD−SiO2/HfO2/O3−SiO2
CVD−SiO2
Thermal−SiO2
0
20
40
60
80
100
120
140
Tox (nm)

FIG. 23

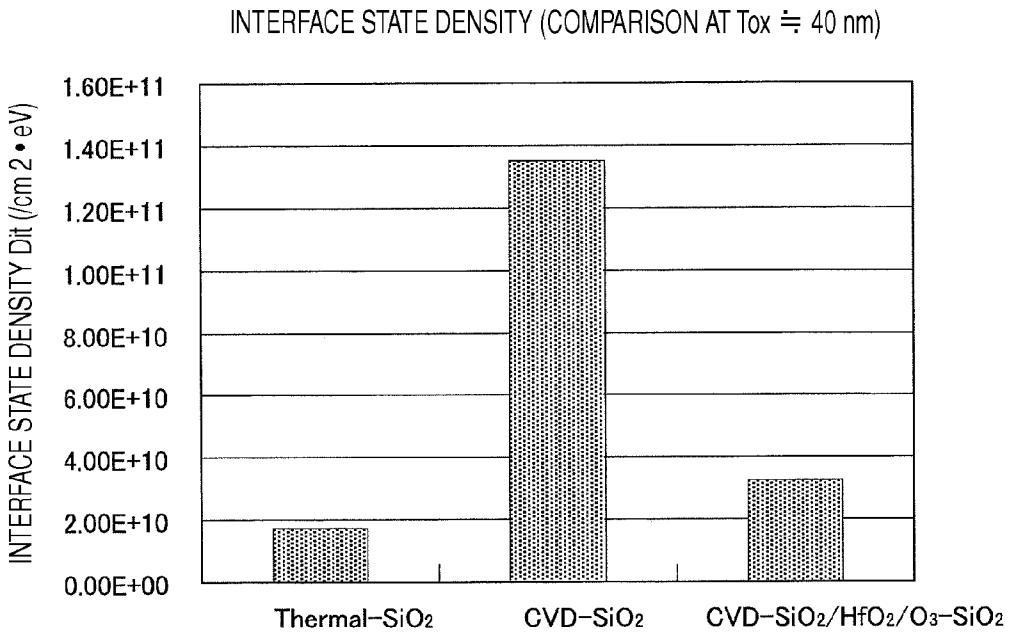
INTERFACE STATE DENSITY (COMPARISON AT Tox ≒ 40 nm)
INTERFACE STATE DENSITY Dit (/cm 2 • eV)
1.60E+11
1.40E+11
1.20E+11
1.00E+11
8.00E+10
6.00E+10
4.00E+10
2.00E+10
0.00E+00
Thermal-SiO2
CVD-SiO2
CVD-SiO2/HfO2/O3-SiO2

FIG. 24

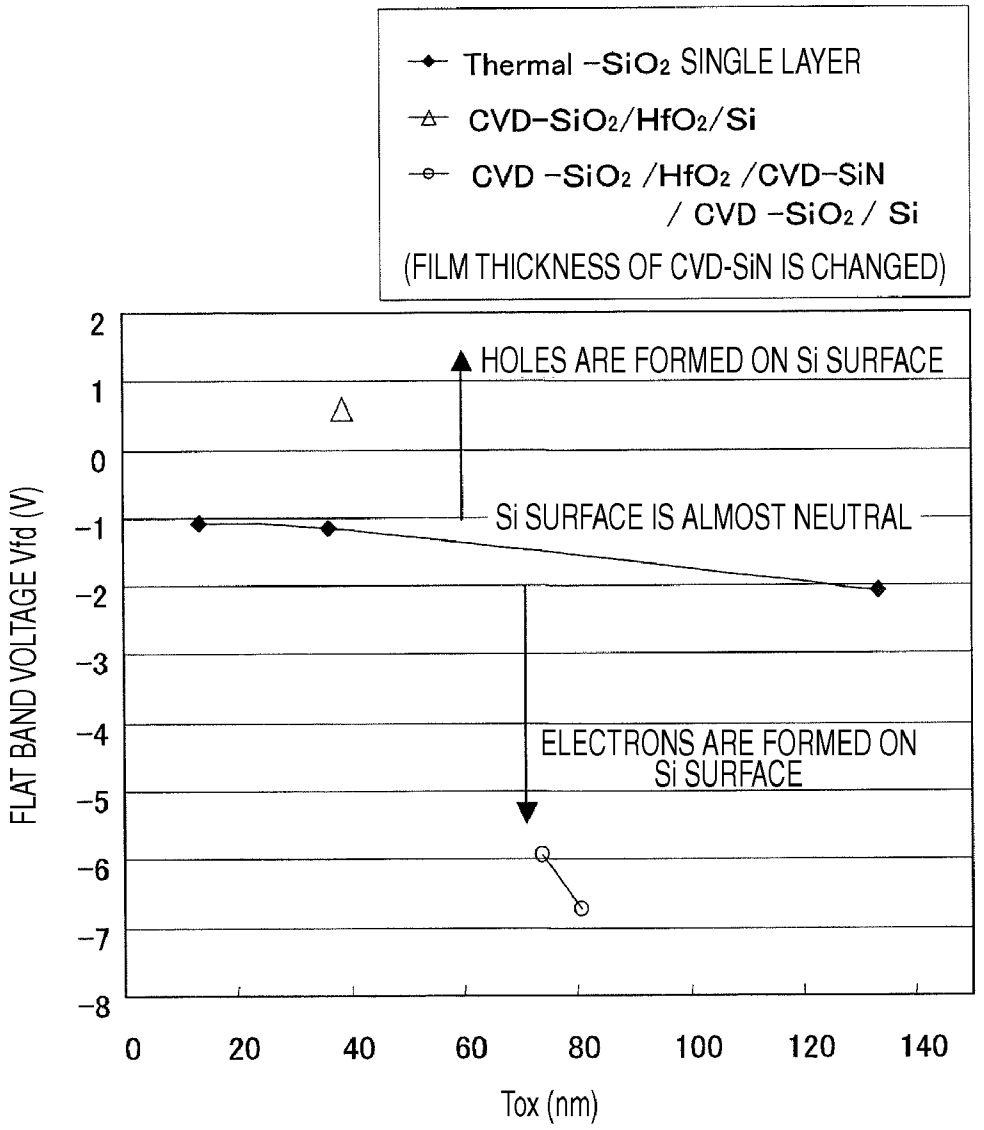
Thermal −SiO2 SINGLE LAYER
CVD−SiO2/HfO2/Si
CVD −SiO2 /HfO2 /CVD−SiN / CVD −SiO2 / Si
(FILM THICKNESS OF CVD-SiN IS CHANGED)
HOLES ARE FORMED ON Si SURFACE
Si SURFACE IS ALMOST NEUTRAL
ELECTRONS ARE FORMED ON Si SURFACE
FLAT BAND VOLTAGE Vfd (V)
2
1
0
−1
−2
−3
−4
−5
−6
−7
−8
0
20
40
60
80
100
120
140
Tox (nm)

FIG. 25

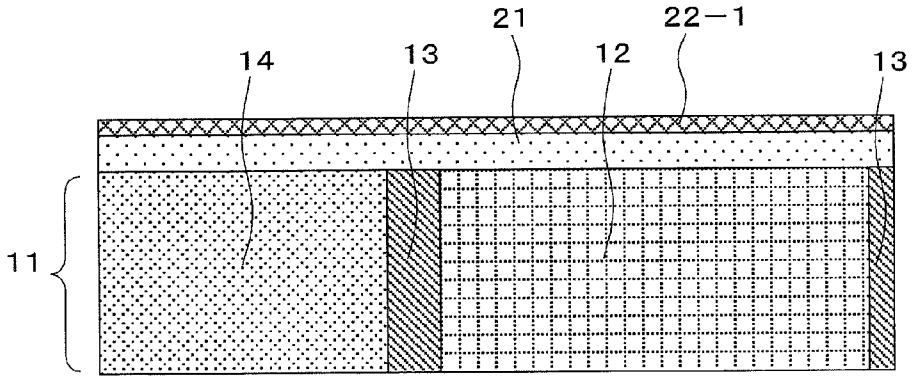

(1)

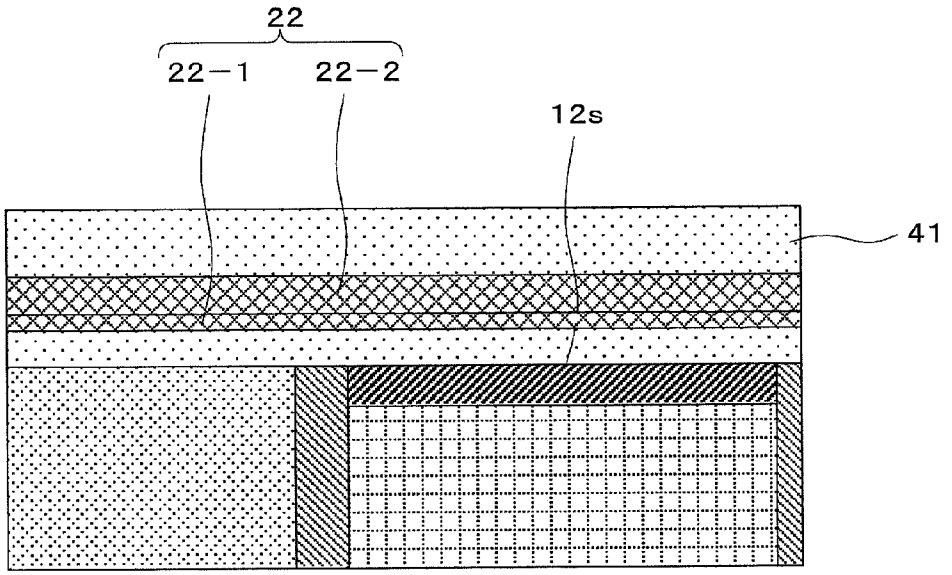

(2)

FIG. 26

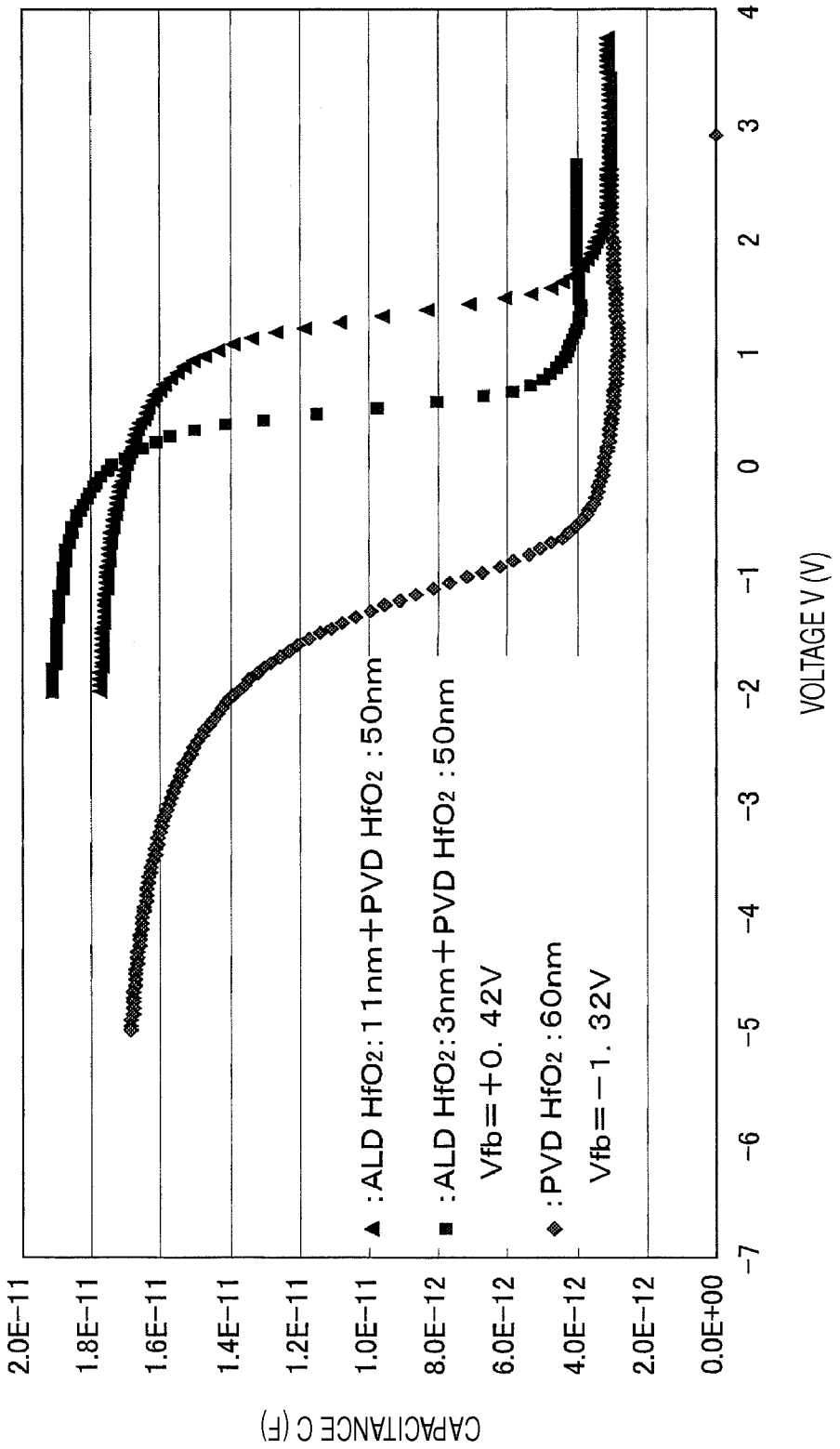
2.0E−11
1.8E−11
1.6E−11
1.4E−11
1.2E−11
1.0E−11
8.0E−12
6.0E−12
4.0E−12
2.0E−12
0.0E+00
CAPACITANCE C (F)
−7
−6
−5
−4
−3
−2
−1
0
1
2
3
4
VOLTAGE V (V)
▲ : ALD HfO2 : 11nm + PVD HfO2 : 50nm
■ : ALD HfO2 : 3nm + PVD HfO2 : 50nm
Vfb = +0. 42V
◆ : PVD HfO2 : 60nm
Vfb = −1. 32V

FIG. 27

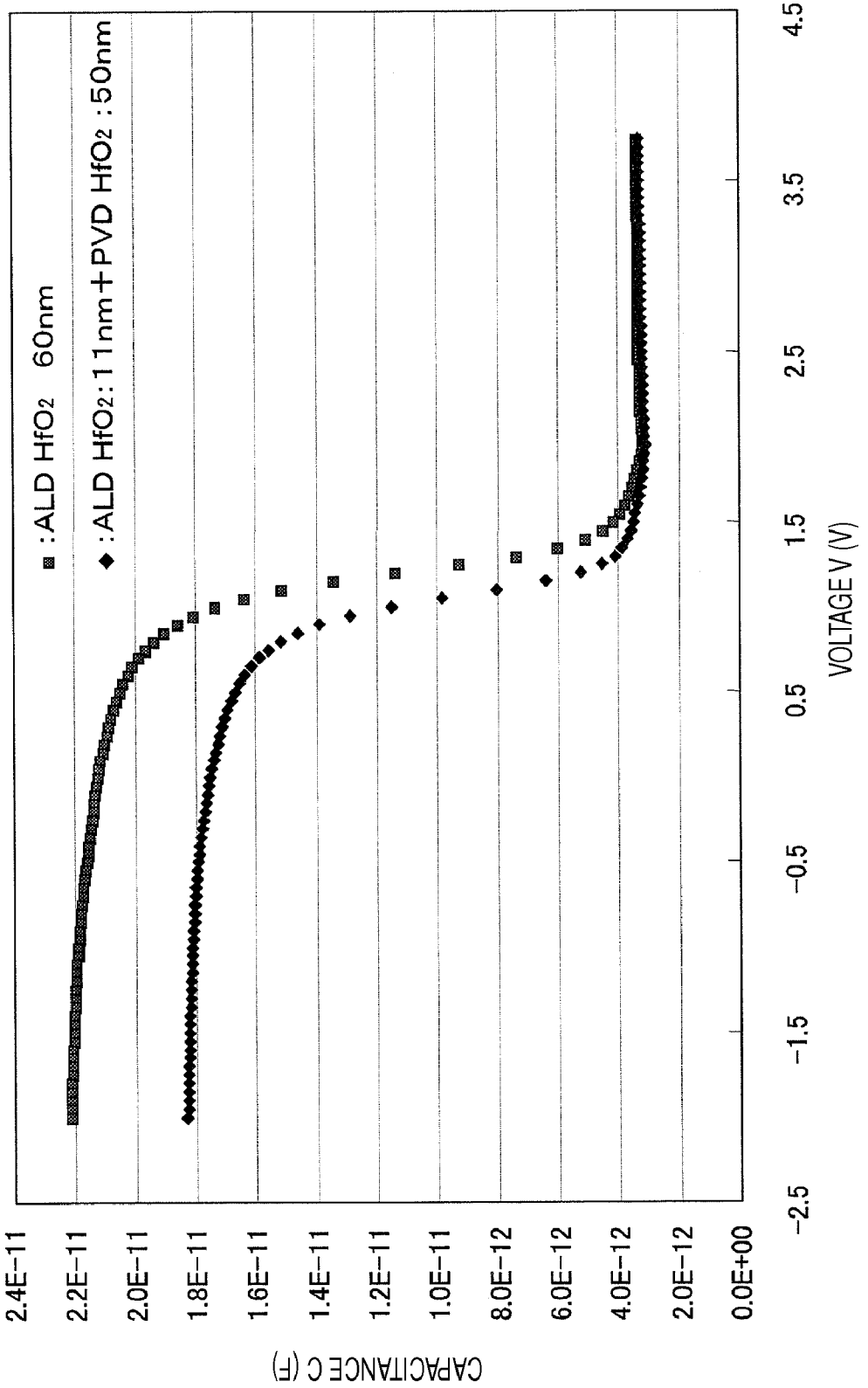
■ : ALD HfO2 60nm
◆ : ALD HfO2 : 11nm + PVD HfO2 : 50nm
CAPACITANCE C (F)
2.4E-11
2.2E-11
2.0E-11
1.8E-11
1.6E-11
1.4E-11
1.2E-11
1.0E-11
8.0E-12
6.0E-12
4.0E-12
2.0E-12
0.0E+00
-2.5
-1.5
-0.5
0.5
1.5
2.5
3.5
4.5
VOLTAGE V (V)

FIG. 28

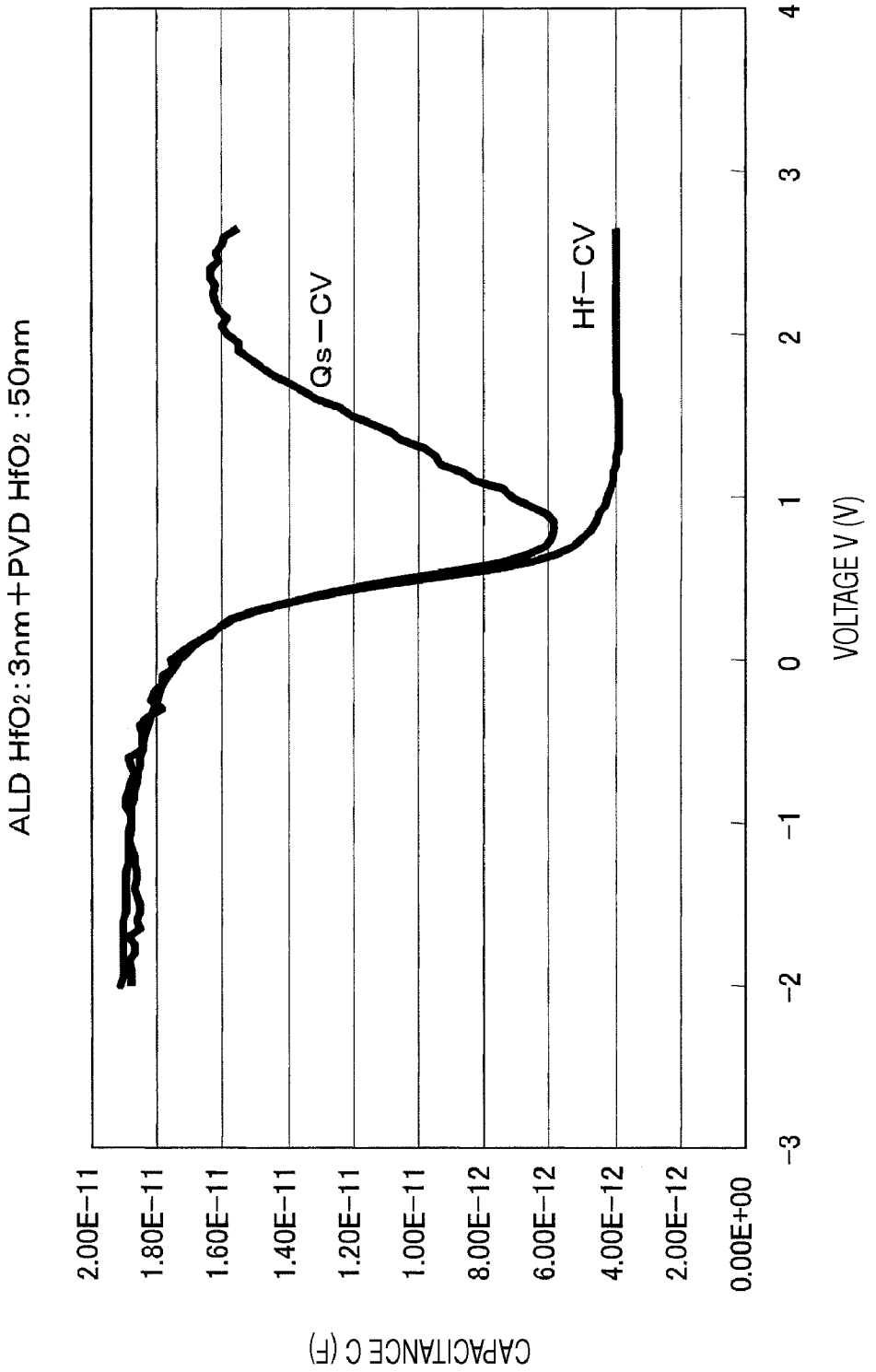
ALD HfO2:3nm+PVD HfO2 :50nm
Qs−CV
Hf−CV
CAPACITANCE C (F)
2.00E−11
1.80E−11
1.60E−11
1.40E−11
1.20E−11
1.00E−11
8.00E−12
6.00E−12
4.00E−12
2.00E−12
0.00E+00
−3
−2
−1
0
1
2
3
4
VOLTAGE V (V)

FIG. 29

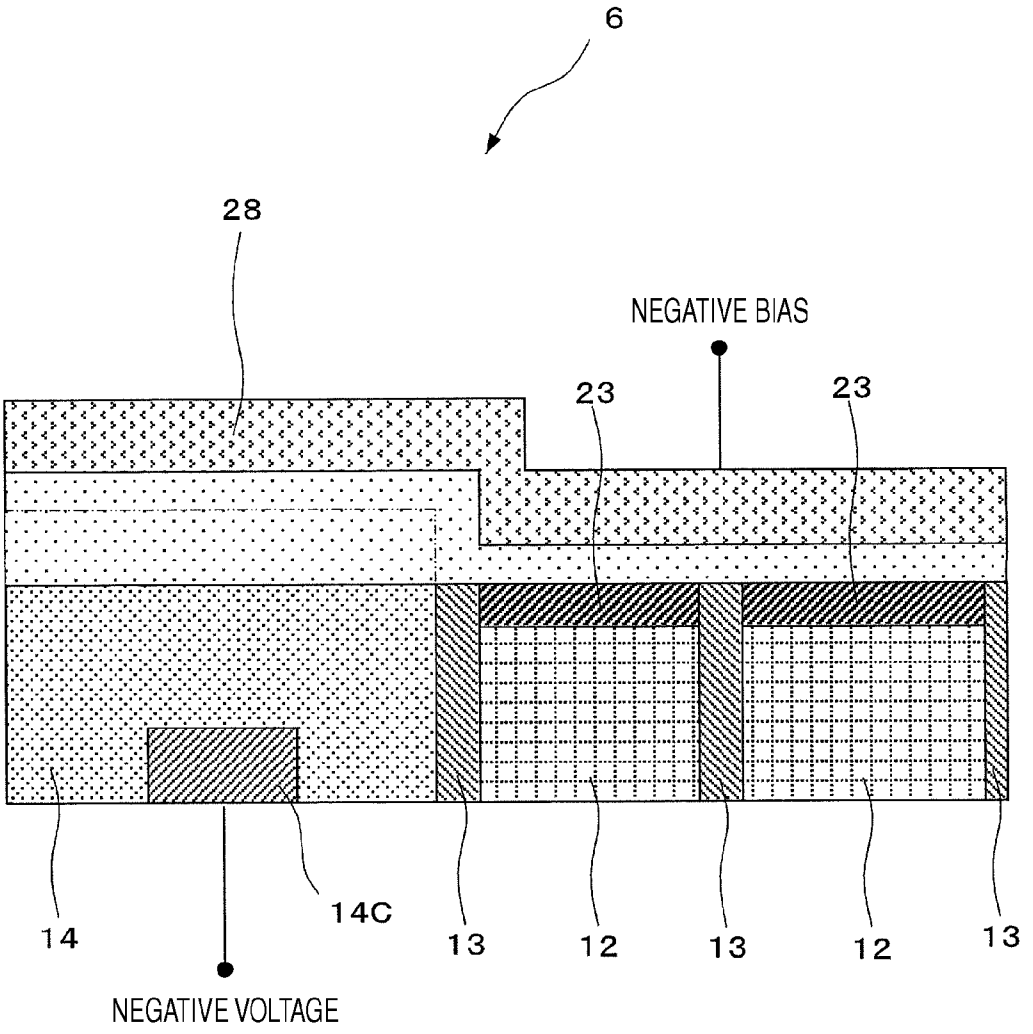

FIG. 30

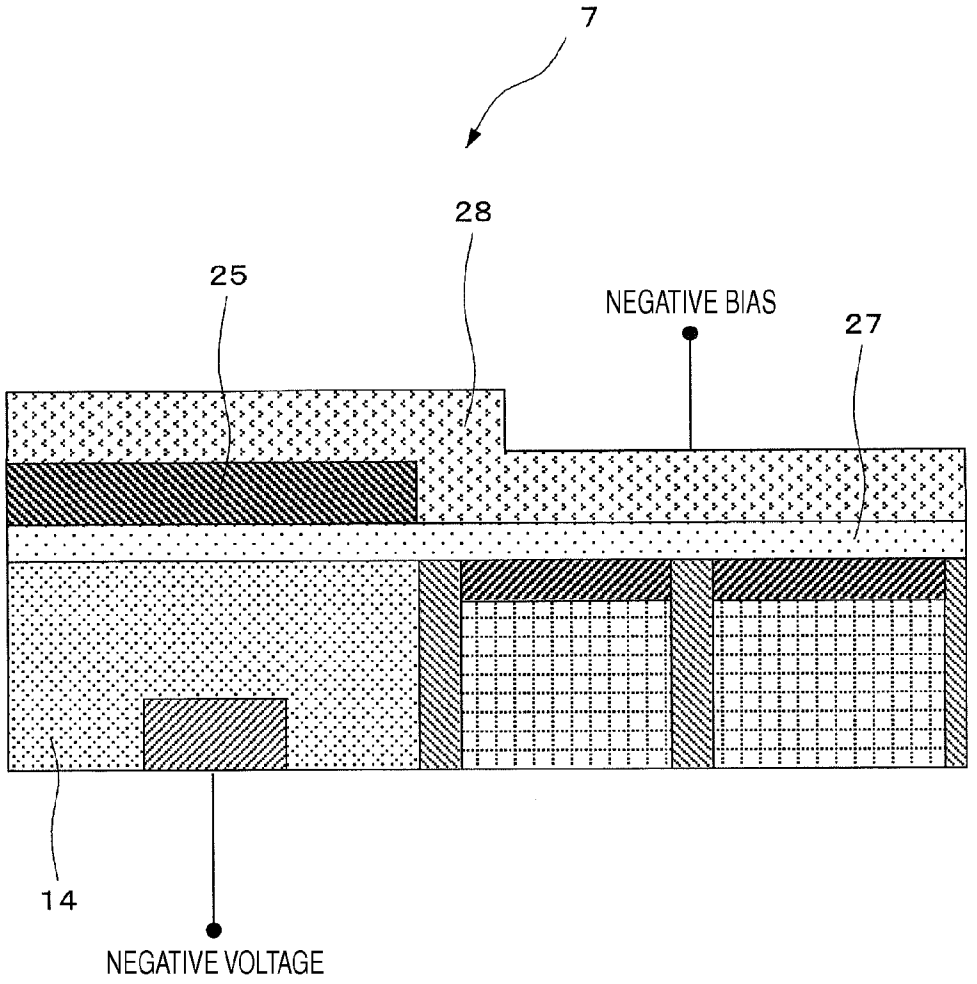

FIG. 31

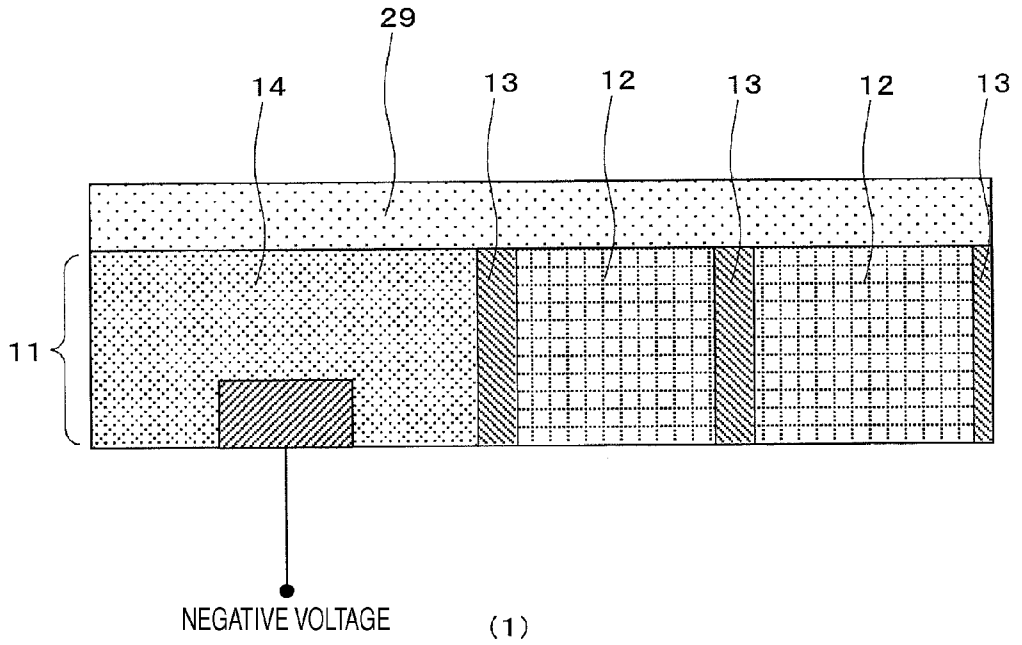
29
14
13
12
13
12
13
11
NEGATIVE VOLTAGE
(1)

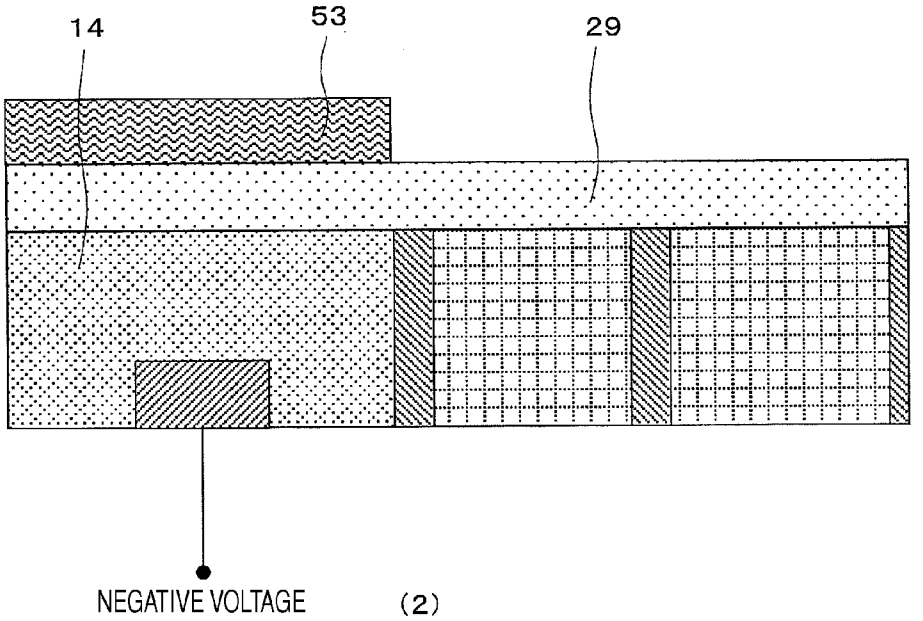
14
53
29
NEGATIVE VOLTAGE
(2)

FIG. 32

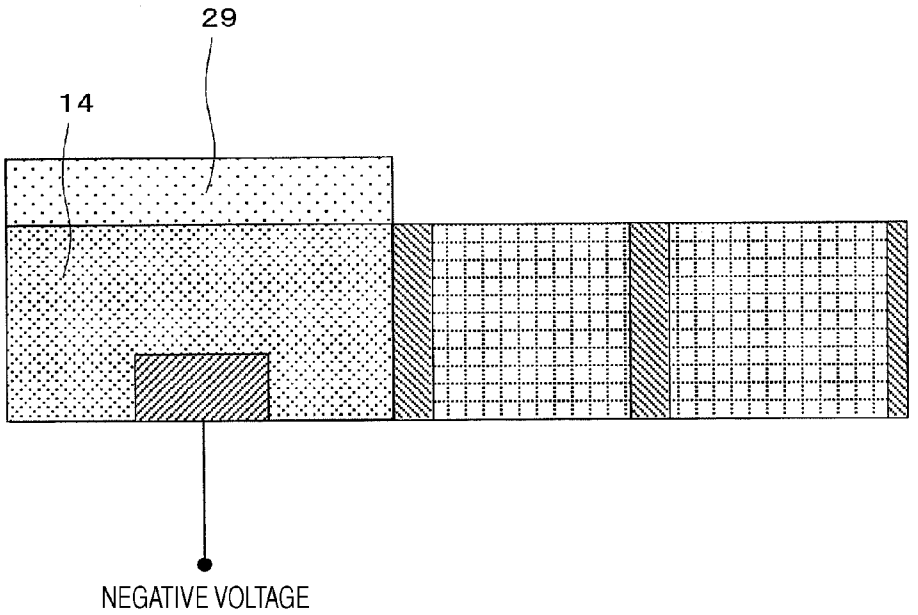

(3)

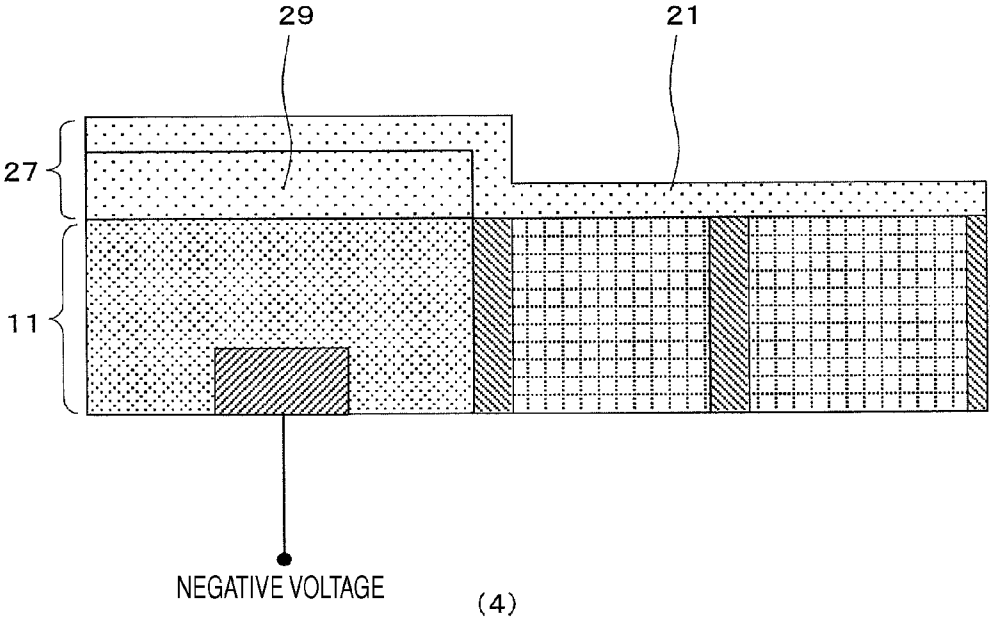

(4)

FIG. 33

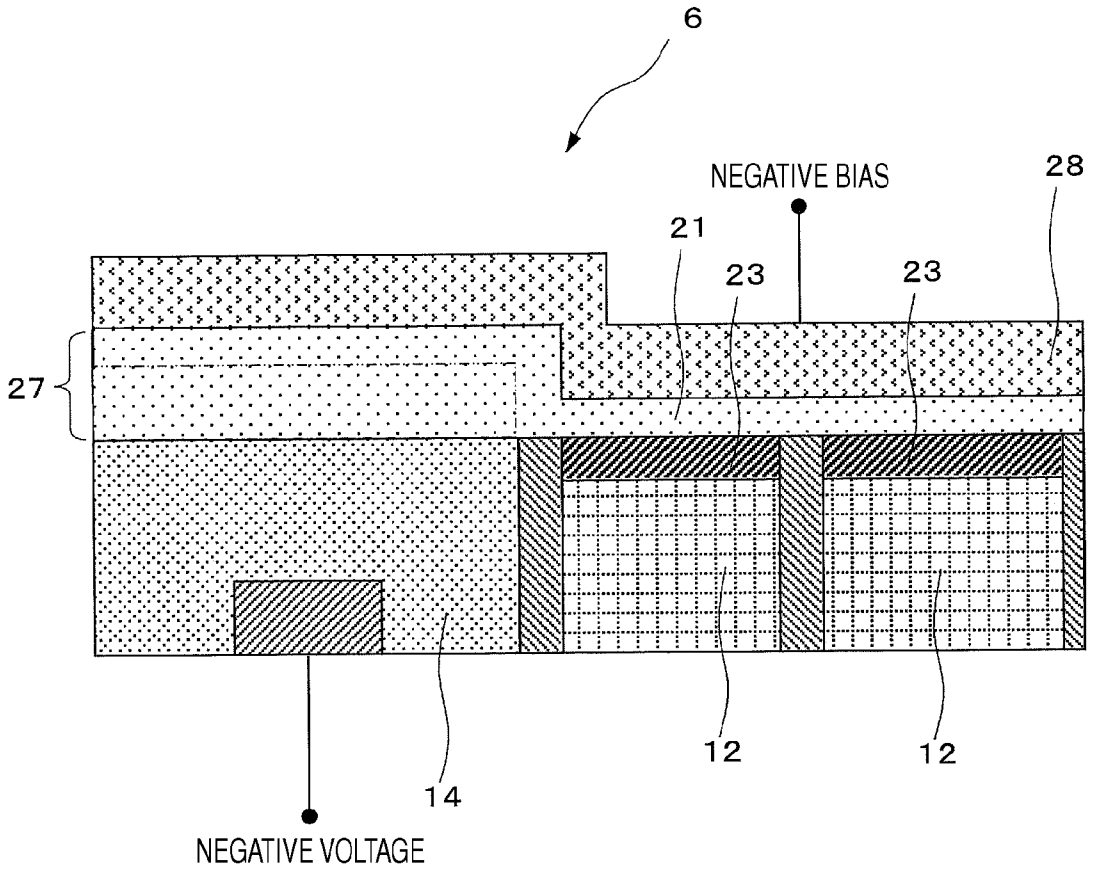

(5)

FIG. 34

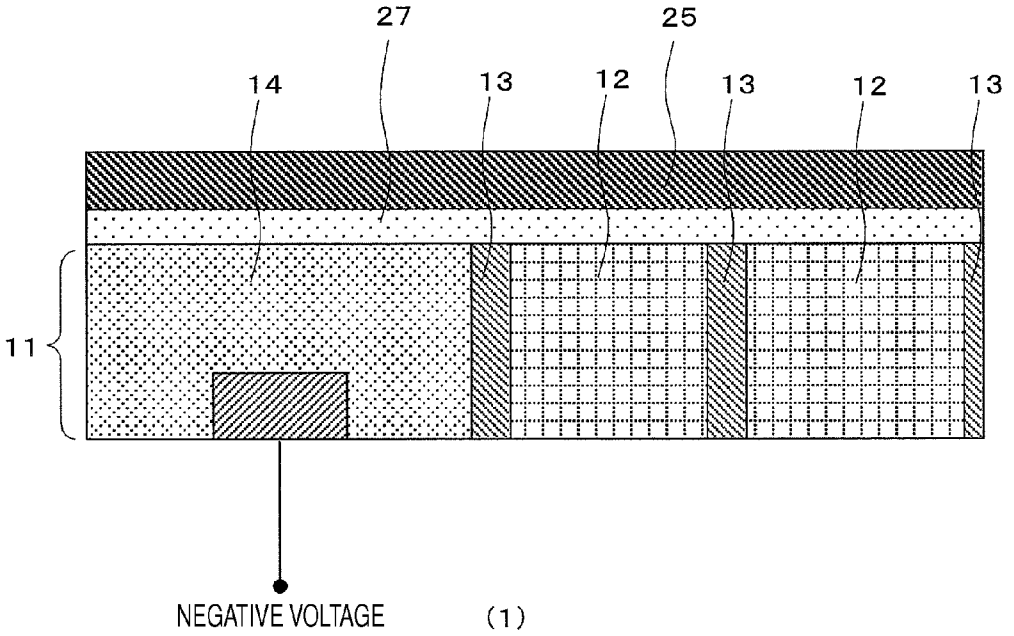
27
25
14
13
12
13
12
13
11
NEGATIVE VOLTAGE
(1)

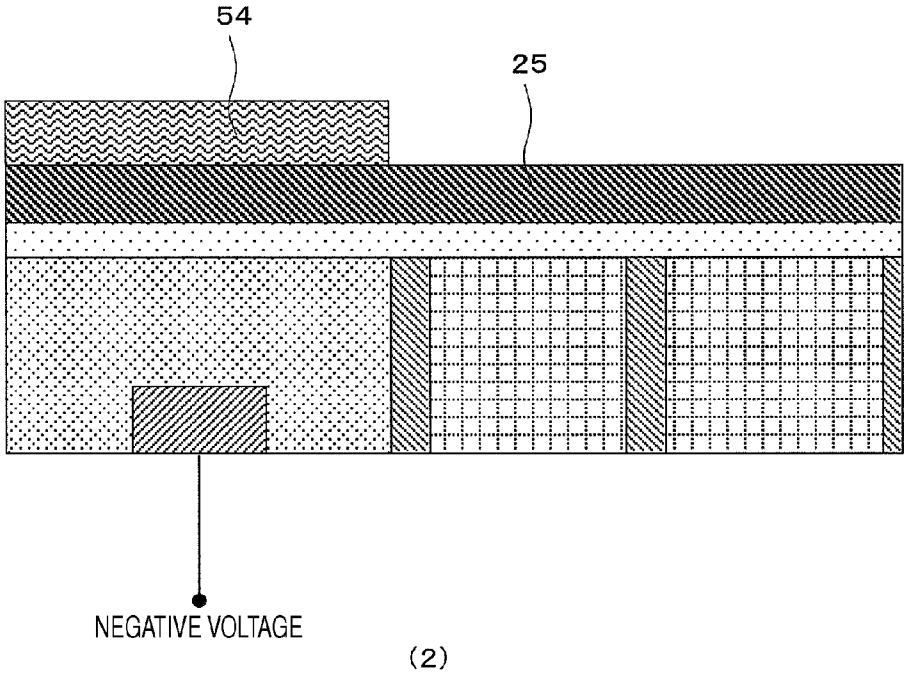
54
25
NEGATIVE VOLTAGE
(2)

FIG. 35

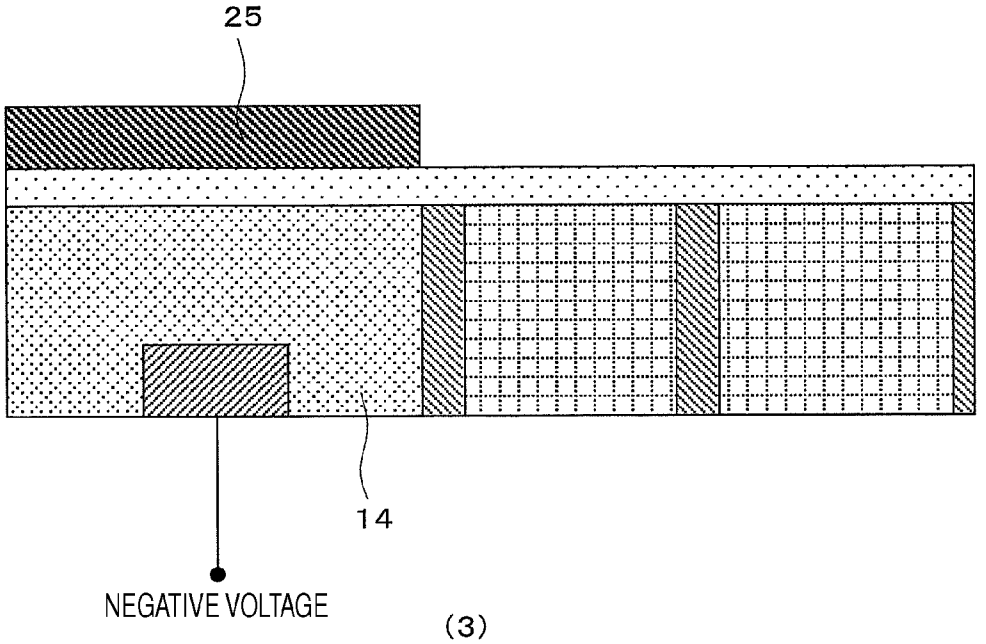
25
14
NEGATIVE VOLTAGE
(3)

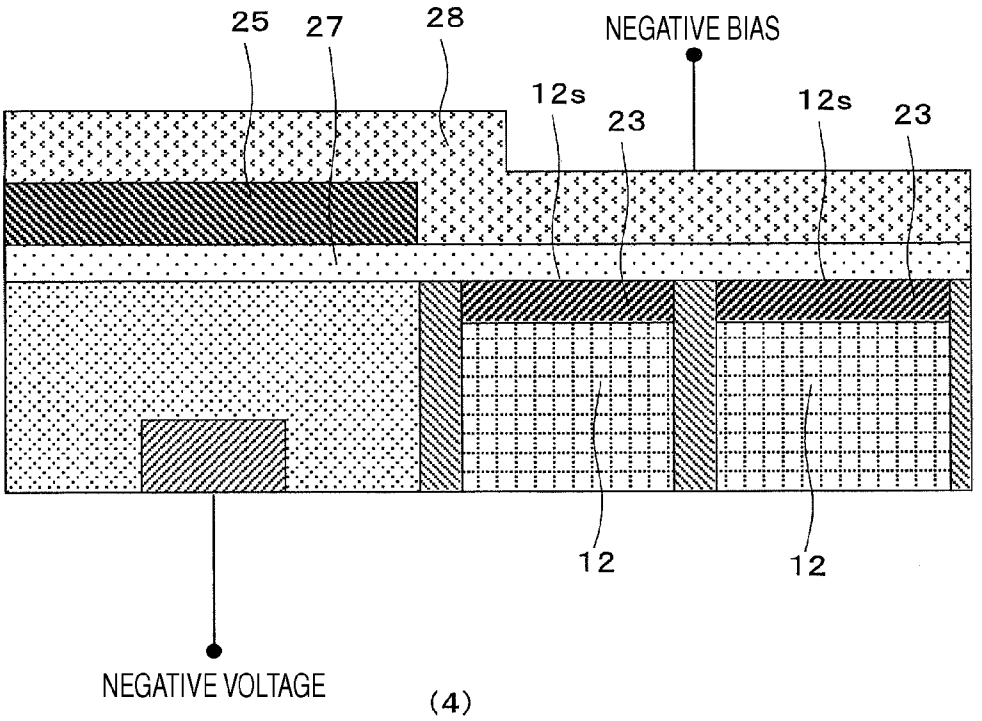
25
27
28
NEGATIVE BIAS
12s
23
12s
23
12
12
NEGATIVE VOLTAGE
(4)

FIG. 36

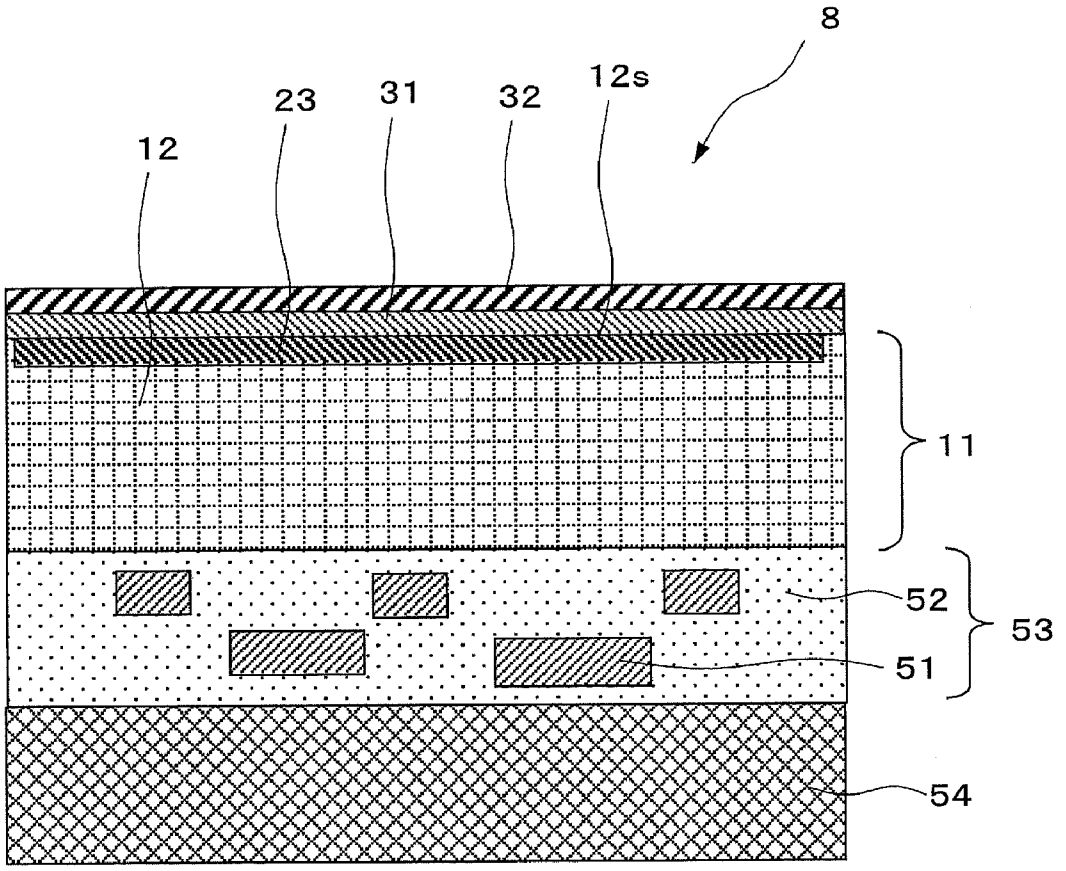

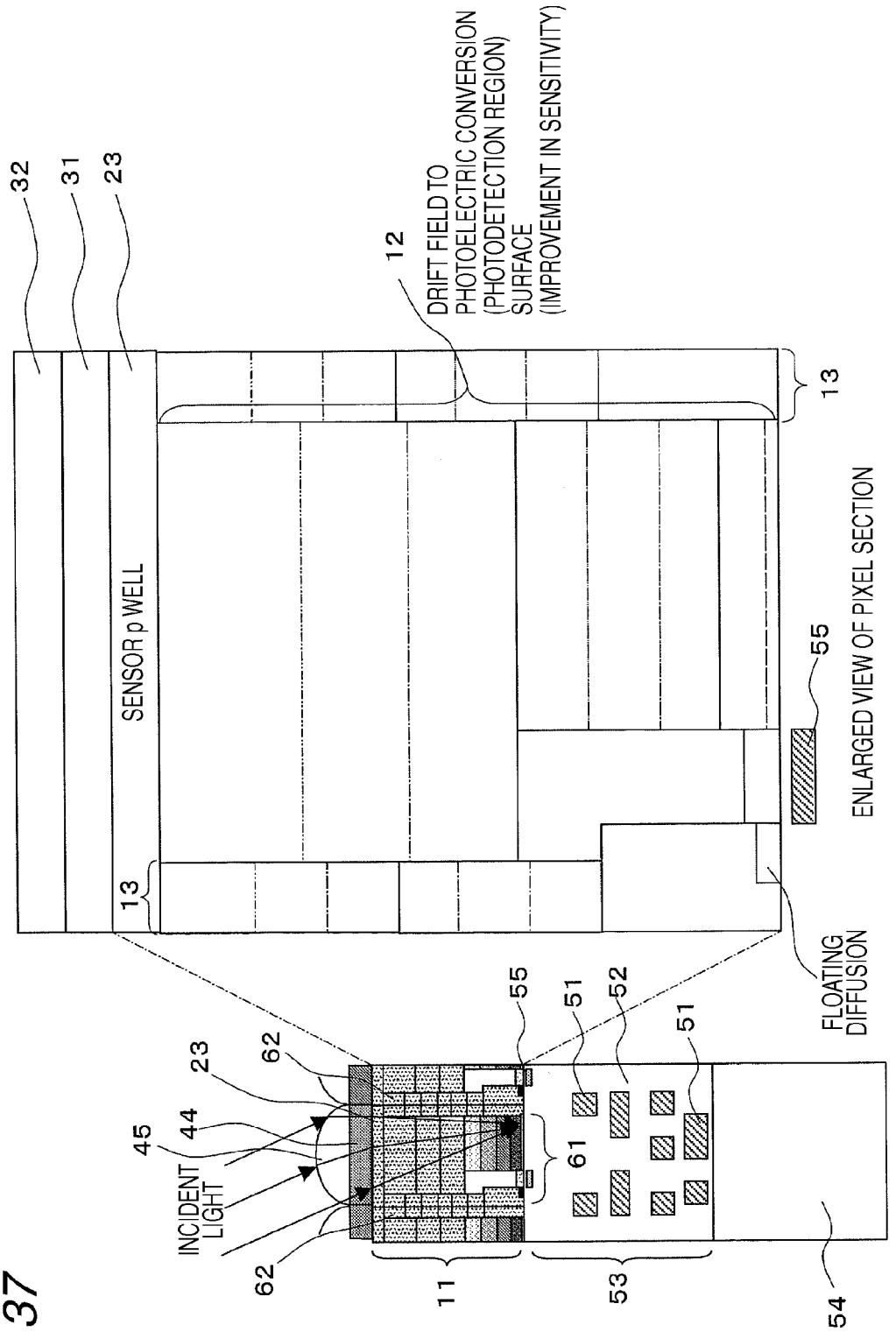
32
31
23
12
DRIFT FIELD TO PHOTOELECTRIC CONVERSION (PHOTODETECTION REGION) SURFACE (IMPROVEMENT IN SENSITIVITY)
13
SENSOR p WELL
13
55
ENLARGED VIEW OF PIXEL SECTION
FLOATING DIFFUSION
55
51
52
51
23
62
45
44
INCIDENT LIGHT
62
61
11
53
54

FIG. 37

FIG. 38

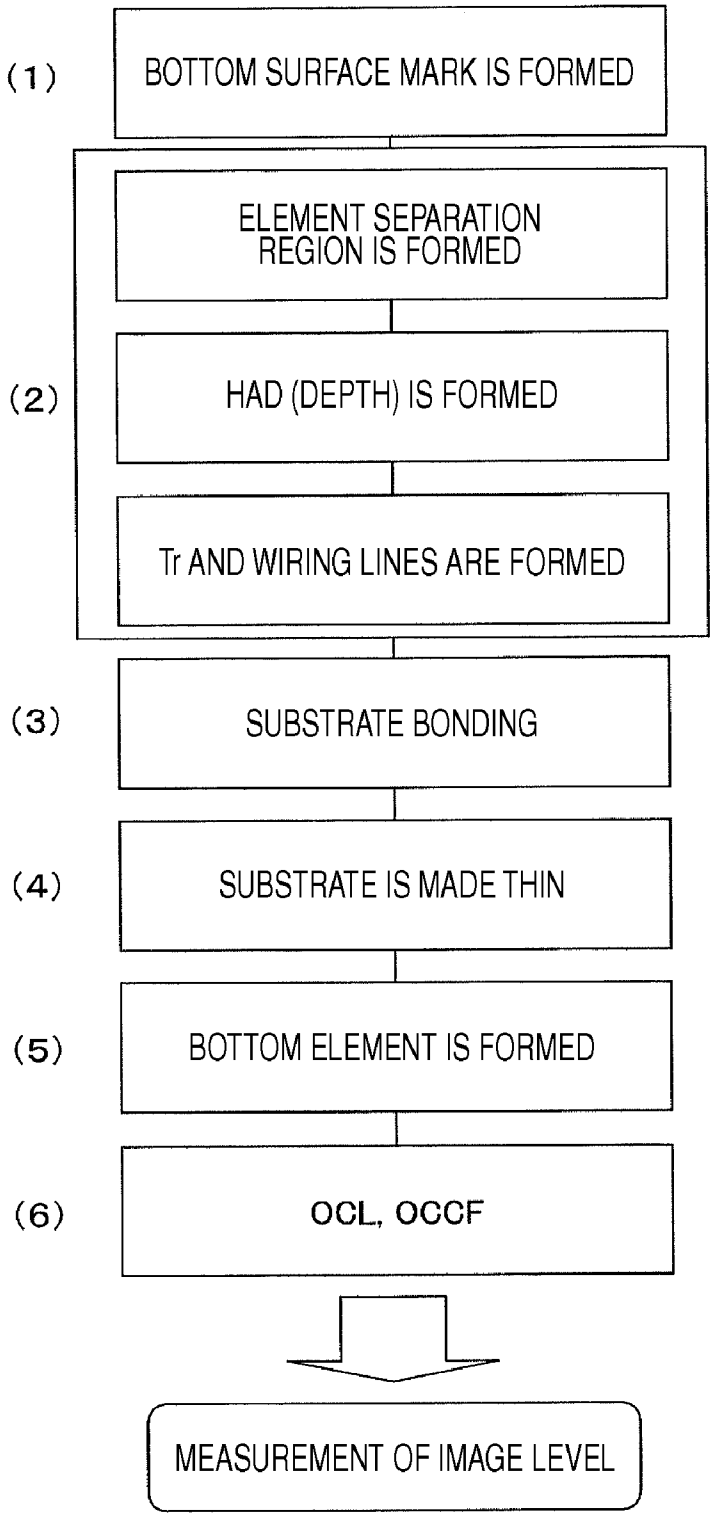
(1)
BOTTOM SURFACE MARK IS FORMED
ELEMENT SEPARATION REGION IS FORMED
(2)
HAD (DEPTH) IS FORMED
Tr AND WIRING LINES ARE FORMED
(3)
SUBSTRATE BONDING
(4)
SUBSTRATE IS MADE THIN
(5)
BOTTOM ELEMENT IS FORMED
(6)
OCL, OCCF
MEASUREMENT OF IMAGE LEVEL

FIG. 39

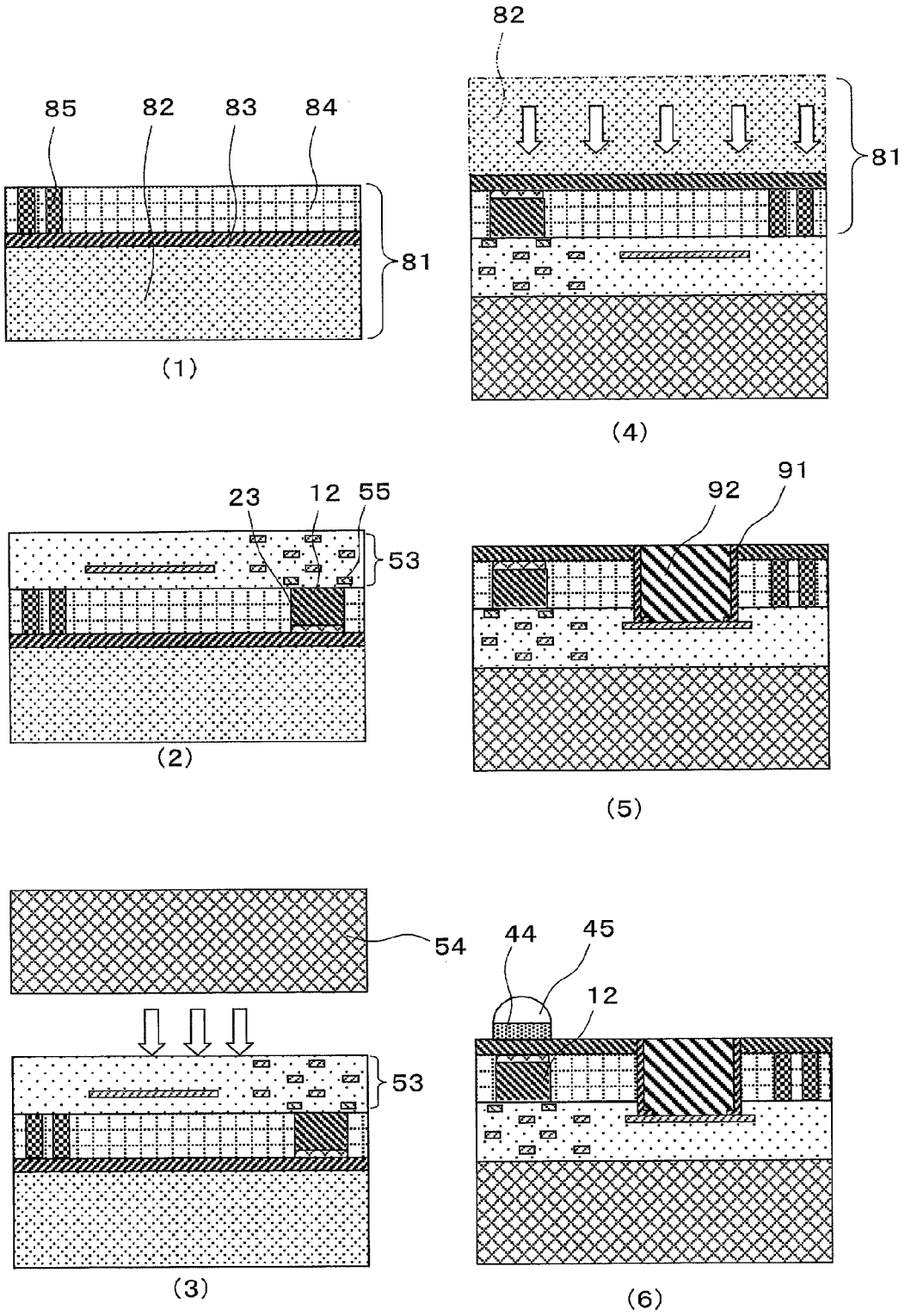

FIG. 40

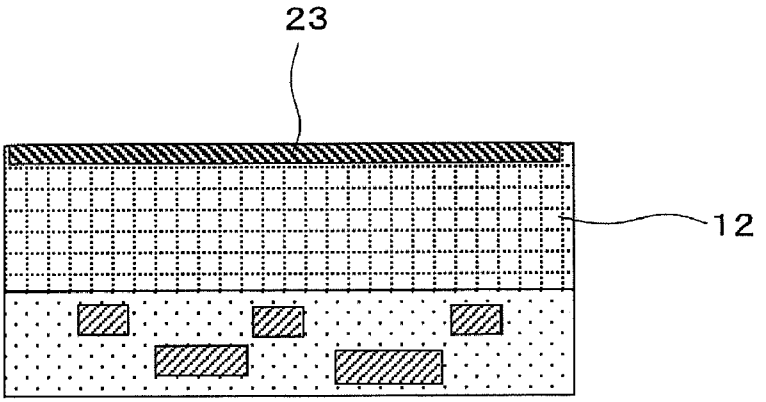

(1)

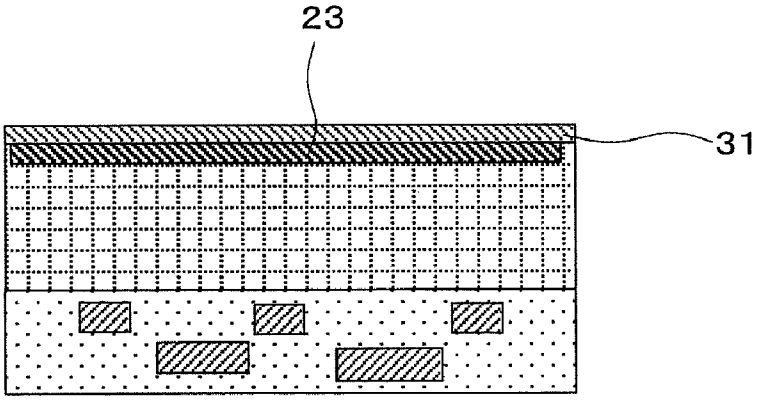

(2)

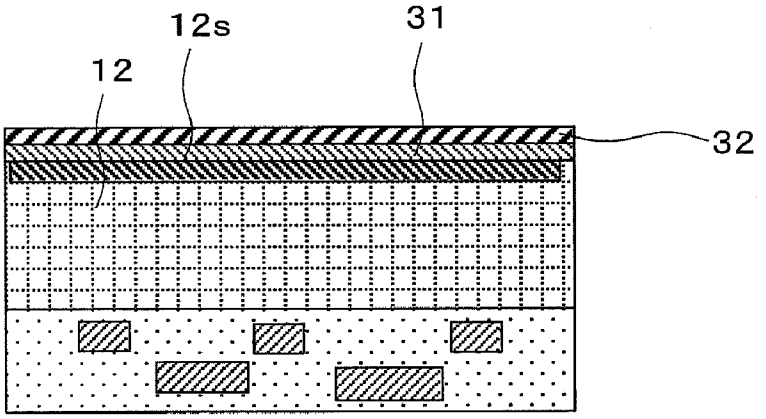

(3)

FIG. 41

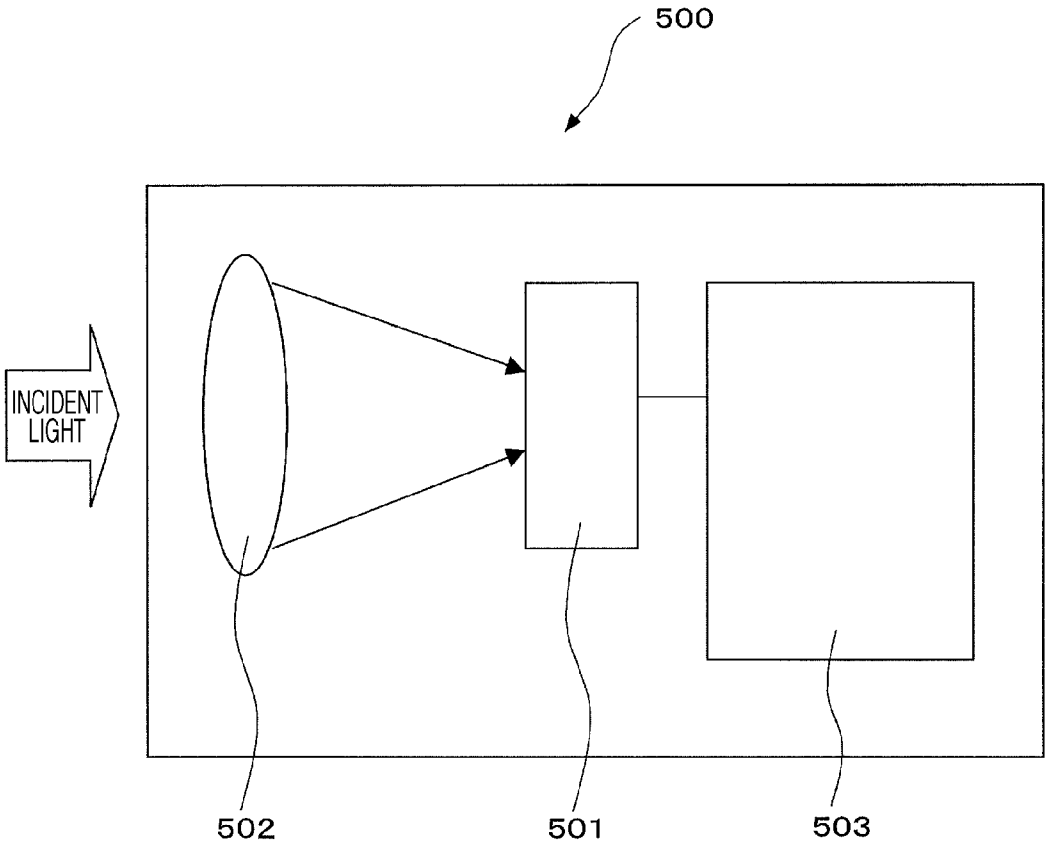

FIG. 42

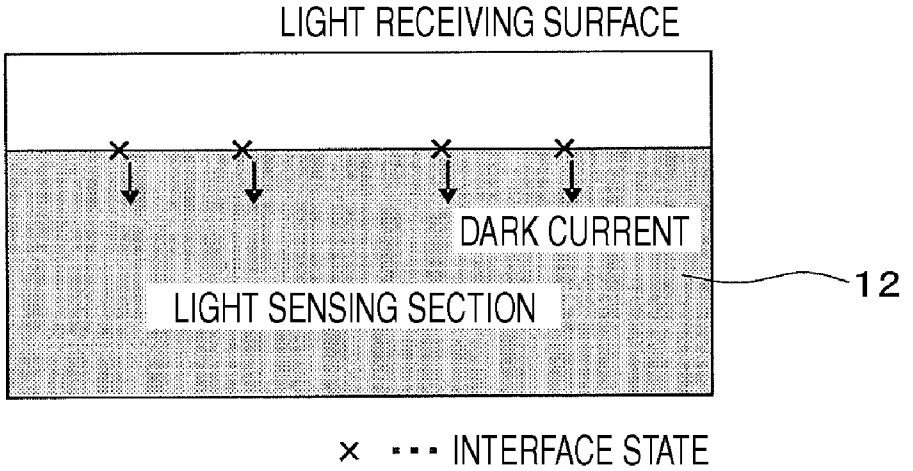
LIGHT RECEIVING SURFACE
DARK CURRENT
LIGHT SENSING SECTION
12
× ··· INTERFACE STATE

(1)

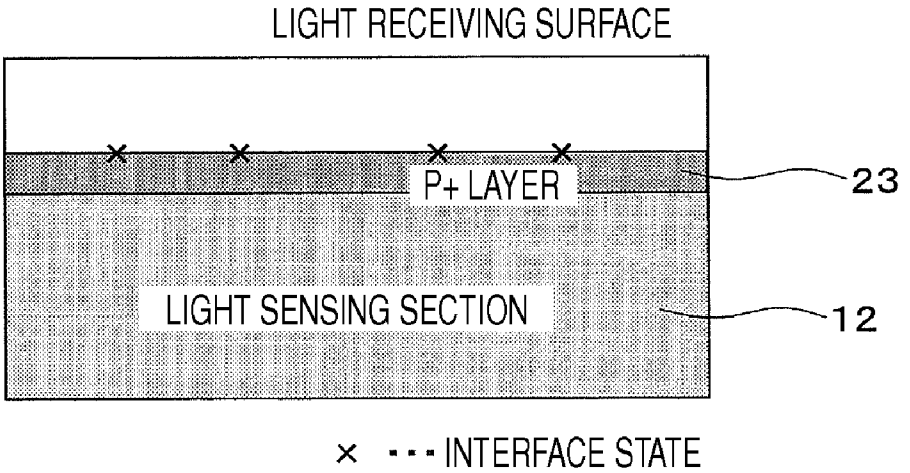
LIGHT RECEIVING SURFACE
P+ LAYER
23
LIGHT SENSING SECTION
12
× ··· INTERFACE STATE

(2)

SOLID STATE IMAGING DEVICE CAPABLE OF SUPRESSING GENERATION OF DARK CURRENT

CROSS REFERENCES TO RELATED APPLICATIONS

The present invention contains subject matter related to Japanese Patent Application JP 2007-265287 filed in the Japanese Patent Office on Oct. 11, 2007, the entire contents of which being incorporated herein by reference.

BACKGROUND OF THE INVENTION

1. Field of the Invention

The present invention relates to a solid state imaging device capable of suppressing generation of a dark current, a method of manufacturing the same, and an imaging apparatus.

2. Description of the Related Art

Solid state imaging devices, such as a CCD (charge coupled device) and a CMOS image sensor, are widely used in a video camera, a digital still camera, and the like. Improvement in sensitivity and noise reduction are important issues in all kinds of solid state imaging devices.

In particular, a dark current, which is detected as a very small current when an electric charge (electron) generated from a minute defect in a substrate interface of a light receiving surface is input as a signal, or a dark current generated due to the interface state on the interface between the light sensing section and an upper layer even though there is no pure signal charge generated by photoelectric conversion of incident light in a state where there is no incident light is a noise to be reduced in the solid state imaging device.

As a technique of suppressing generation of a dark current caused by the interface state, for example, an embed type photodiode structure having a hole accumulation layer **23** formed of a P^+ layer on a light sensing section (for example, a photodiode) **12** is used as shown in (**2**) of FIG. **42**. Moreover, in this specification, the embed type photodiode structure is referred to as an HAD (hole accumulated diode) structure. As shown in (**1**) of FIG. **42**, in a structure where the HAD structure is not provided, electrons generated due to the interface state flow to the photodiode as a dark current. On the other hand, as shown in (**2**) of FIG. **38**, in the HAD structure, generation of electrons from the interface is suppressed by the hole accumulation layer **23** formed on the interface. In addition, even if electric charges (electrons) are generated from the interface, the electric charges (electrons) do not flow to a charge accumulation section, which is a potential well in an N^+ layer of the light sensing section **12**, but flow to the hole accumulation layer **23** of the P^+ layer in which many holes exist. Accordingly, the electric charges (electrons) can be eliminated. As a result, since it can be prevented that the electric charges generated due to the interface are detected as a dark current, the dark current caused by the interface state can be suppressed.

As a method of forming the HAD structure, it is common to perform ion implantation of impurities for forming the P^+ layer, for example, boron (B) or boron difluoride (BF_2) through a thermally oxidized layer or a CVD oxide layer formed on a substrate, to activate injected impurities by annealing, and then to form a p-type region near the interface. However, heat treatment in a high temperature of 700° C. or more is essential in order to activate doped impurities. Accordingly, formation of the hole accumulation layer using ion implantation is difficult in a low-temperature process at 400° C. or less. Also in the case of desiring to avoid long-time activation at high temperature in order to suppress diffusion of dopant, the method of forming a hole accumulation layer in which ion implantation and annealing are performed is not preferable.

Furthermore, when a silicon oxide or a silicon nitride formed on an upper layer of the light sensing section is formed in a low-temperature plasma CVD method, for example, the interface state is reduced compared with an interface between of a light receiving surface and a layer formed at high temperature. The reduction in interface state increases a dark current.

As described above, in the case of desiring to avoid ion implantation and annealing process at high temperature, not only the hole accumulation layer cannot be formed by known ion implantation but also a dark current is further reduced. In order to solve the problem, it becomes necessary to form a hole accumulation layer in another method that is not based on ion implantation in the related art.

For example, there is disclosed a technique in which charged particles having the same polarity as an opposite conduction type are embedded in an insulating layer formed of a silicon oxide on a photoelectric conversion element having a conduction type opposite a conduction type of a semiconductor region formed within a semiconductor region to thereby pull up an electric potential of a surface of the photoelectric conversion section and form an inversion layer on the surface and as a result, generation of a dark current is reduced by preventing depletion of the surface (for example, refer to JP-A-1-256168). However, in the above technique, a technique of embedding the charged particles into the insulating layer is needed, but it is not known which kind of embedding technique is used. In addition, in order to inject electric charges into the insulating layer from the outside as normally used in a nonvolatile memory, an electrode used to inject electric charges is needed. Even if electric charges can be injected from the outside in a non-contact state without using an electrode, the electric charges trapped in the insulating layer are not detrapped. Accordingly, an electric charge holding property becomes a problem. For this reason, since a high-quality insulating layer having a high electric charge holding property is requested, it has been difficult to realize the insulating layer.

SUMMARY OF THE INVENTION

In order to form a sufficient hole accumulation layer by performing ion implantation into a light sensing section (photoelectric conversion section) in high concentration, annealing in high temperature is essential since the light sensing section is damaged by the ion implantation. In this case, however, diffusion of impurities occurs and a photoelectric conversion characteristic deteriorates. On the other hand, when the ion implantation is performed in low concentration in order to reduce damage caused by the ion implantation, the concentration of the hole accumulation layer lowers. As a result, the hole accumulation layer does not sufficiently function as a hole accumulation layer. That is, it is difficult to realize a sufficient hole accumulation layer and to reduce a dark current while maintaining a desired photoelectric conversion characteristic by suppressing diffusion of impurities.

In view of the above, it is desirable to realize a sufficient hole accumulation layer and to reduce a dark current.

According to an embodiment of the present invention, a solid state imaging device (first solid state imaging device) having a light sensing section that performs photoelectric conversion of incident light includes: an interface state lowering layer formed on a light receiving surface of the light

sensing section; a layer having negative electric charges formed on the interface state lowering layer; and a hole accumulation layer formed on the light receiving surface of the light sensing section.

In the first solid state imaging device described above, since the layer having negative electric charges is formed on the interface state lowering layer, the hole accumulation layer is sufficiently formed on the light-receiving-surface-side interface of the light sensing section by the electric field generated by negative electric charges. Accordingly, generation of electric charges (electrons) from the interface is suppressed. In addition, even if electric charges (electrons) are generated from the interface, the electric charges (electrons) do not flow to a charge accumulation portion which is a potential well in the light sensing section but flow to the hole accumulation layer in which many holes exist. As a result, the electric charges (electrons) can be eliminated. As a result, since it can be prevented that the electric charges generated due to the interface become a dark current and are detected by the light sensing section, a dark current caused by the interface state is suppressed. Furthermore, generation of electrons due to the interface state is further suppressed since the interface state lowering layer is formed on the light receiving surface of the light sensing section. As a result, it is suppressed that electrons generated due to the interface state flow to the light sensing section as a dark current.

According to another embodiment of the present invention, a solid state imaging device (second solid state imaging device) having a light sensing section that performs photoelectric conversion of incident light includes: an insulating layer that is formed on a light receiving surface of the light sensing section and allows the incident light to be transmitted therethrough; a negative voltage applying layer formed on the insulating layer; and a hole accumulation layer formed on the light receiving surface of the light sensing section.

In the second solid state imaging device described above, since the negative voltage applying layer is formed on the insulating layer formed on the light receiving surface of the light sensing section, the hole accumulation layer is sufficiently formed on the light-receiving-surface-side interface of the light sensing section by the electric field generated when a negative voltage is applied to the negative voltage applying layer. Accordingly, generation of electric charges (electrons) from the interface is suppressed. In addition, even if electric charges (electrons) are generated from the interface, the electric charges (electrons) do not flow to a charge accumulation portion which is a potential well in the light sensing section but flow to the hole accumulation layer in which many holes exist. As a result, the electric charges (electrons) can be eliminated. As a result, since it can be prevented that the electric charges generated due to the interface become a dark current and are detected by the light sensing section, a dark current caused by the interface state is suppressed.

According to still another embodiment of the present invention, a solid state imaging device (third solid state imaging device) having a light sensing section that performs photoelectric conversion of incident light includes: an insulating layer formed on a light receiving surface of the light sensing section; and a layer that is formed on the insulating layer and has a work function value larger than that of a light-receiving-surface-side interface of the light sensing section that performs photoelectric conversion.

In the third solid state imaging device described above, since the layer having a work function value larger than that of the light-receiving-surface-side interface of the light sensing section that performs photoelectric conversion is provided on the insulating layer formed on the light sensing section, holes can be accumulated in the light-receiving-side interface of the light sensing section. As a result, a dark current is reduced.

According to still another embodiment of the present invention, a method (first manufacturing method) of manufacturing a solid state imaging device in which a light sensing section that performs photoelectric conversion of incident light is formed in a semiconductor substrate includes the steps of: forming an interface state lowering layer on the semiconductor substrate formed with the light sensing section; forming a layer having negative electric charges on the interface state lowering layer; and forming a hole accumulation layer on a light receiving surface of the light sensing section with the layer having negative electric charges.

In the method (first manufacturing method) of manufacturing a solid state imaging device, since the layer having negative electric charges is formed on the interface state lowering layer, the hole accumulation layer is sufficiently formed on the light-receiving-surface-side interface of the light sensing section by the electric field generated by negative electric charges. Accordingly, electric charges (electrons) generated from the interface is suppressed. In addition, even if electric charges (electrons) are generated from the interface, the electric charges (electrons) do not flow to a charge accumulation portion which is a potential well in the light sensing section but flow to the hole accumulation layer in which many holes exist. As a result, the electric charges (electrons) can be eliminated. Thus, since it can be prevented that a dark current generated by the electric charges on the interface is detected in the light sensing section, a dark current caused by the interface state is suppressed. Furthermore, generation of electrons due to the interface state is further suppressed since the interface state lowering layer is formed on the light receiving surface of the light sensing section. As a result, it is suppressed that electrons generated due to the interface state flow to the light sensing section as a dark current. In addition, by using the layer having negative electric charges, the HAD structure can be formed without ion implantation and annealing.

According to still another embodiment of the present invention, a method (second manufacturing method) of manufacturing a solid state imaging device in which a light sensing section that performs photoelectric conversion of incident light is formed in a semiconductor substrate includes the steps of: forming an insulating layer, which allows the incident light to be transmitted therethrough, on a light receiving surface of the light sensing section; forming a negative voltage applying layer on the insulating layer; and forming a hole accumulation layer on the light receiving surface of the light sensing section by applying a negative voltage to the negative voltage applying layer.

In the method (second manufacturing method) of manufacturing a solid state imaging device, since the negative voltage applying layer is formed on the insulating layer formed on the light receiving surface of the light sensing section, the hole accumulation layer is sufficiently formed on the light-receiving-surface-side interface of the light sensing section by the electric field generated when a negative voltage is applied to the negative voltage applying layer. Accordingly, electric charges (electrons) generated from the interface is suppressed. In addition, even if electric charges (electrons) are generated from the interface, the electric charges (electrons) do not flow to a charge accumulation portion which is a potential well in the light sensing section but flow to the hole accumulation layer in which many holes exist. As a result, the electric charges (electrons) can be eliminated. Thus, since it can be prevented that a dark current generated by the electric

charges on the interface is detected in the light sensing section, a dark current caused by the interface state is suppressed. In addition, by using the layer having negative electric charges, the HAD structure can be formed without ion implantation and annealing.

According to still another embodiment of the present invention, a method (third manufacturing method) of manufacturing a solid state imaging device in which a light sensing section that performs photoelectric conversion of incident light is formed in a semiconductor substrate includes the steps of: forming an insulating layer on a light receiving surface of the light sensing section; and forming a layer, which has a work function value larger than that of a light-receiving-surface-side interface of the light sensing section that performs photoelectric conversion, on the insulating layer.

In the method (third manufacturing method) of manufacturing a solid state imaging device, since the layer having a work function value larger than that of the light-receiving-surface-side interface of the light sensing section that performs photoelectric conversion is provided on the insulating layer formed on the light sensing section, it is possible to form the hole accumulation layer which is formed on the light-receiving-side interface of the light sensing section. As a result, a dark current is reduced.

According to still another embodiment of the present invention, an imaging apparatus (first imaging apparatus) includes: a condensing optical section that condenses incident light; a solid state imaging device that receives the incident light condensed in the condensing optical section and performs photoelectric conversion of the received light; and a signal processing section that processes signal charges photoelectrically converted. The solid state imaging device includes: an interface state lowering layer formed on a light receiving surface of a light sensing section of the solid state imaging device that performs photoelectric conversion of the incident light; a layer having negative electric charges formed on the interface state lowering layer; and a hole accumulation layer formed on the light receiving surface of the light sensing section.

In the first imaging apparatus described above, since the first solid state imaging device according to the embodiment of the present invention is used, a solid state imaging device in which a dark current is reduced can be used.

According to still another embodiment of the present invention, an imaging apparatus (second imaging apparatus) includes: a condensing optical section that condenses incident light; a solid state imaging device that receives the incident light condensed in the condensing optical section and performs photoelectric conversion of the received light; and a signal processing section that processes signal charges photoelectrically converted. The solid state imaging device includes: an insulating layer formed on a light receiving surface of a light sensing section of the solid state imaging device that performs photoelectric conversion of the incident light; and a negative voltage applying layer formed on the insulating layer. The insulating layer allows the incident light to be transmitted therethrough, and a hole accumulation layer is formed on the light receiving surface of the light sensing section.

In the second imaging apparatus described above, since the second solid state imaging device according to the embodiment of the present invention is used, a solid state imaging device in which a dark current is reduced can be used.

According to still another embodiment of the present invention, an imaging apparatus (third imaging apparatus) includes: a condensing optical section that condenses incident light; a solid state imaging device that receives the incident light condensed in the condensing optical section and performs photoelectric conversion of the received light; and a signal processing section that processes signal charges photoelectrically converted. The solid state imaging device includes: an insulating layer formed on an upper layer of a light receiving surface of a light sensing section of the solid state imaging device that converts the incident light into signal charges; and a layer that is formed on the insulating layer and has a work function value larger than that of a light-receiving-surface-side interface of the light sensing section that performs photoelectric conversion.

In the third imaging apparatus described above, since the third solid state imaging device according to the embodiment of the present invention is used, a solid state imaging device in which a dark current is reduced can be used.

In the solid state imaging device according to the embodiment of the present invention, a noise in an imaged image can be reduced because a dark current can be suppressed. As a result, there is an advantage that a high-quality image can be obtained. In particular, generation of a white point (point of a primary color in the case of a color CCD) due to a dark current at the time of long-time exposure with a small exposure amount can be reduced.

In the method of manufacturing a solid state imaging device according to the embodiment of the present invention, a noise in an imaged image can be reduced because a dark current can be suppressed. As a result, there is an advantage that a solid state imaging device capable of obtaining a high-quality image can be realized. In particular, it becomes possible to realize a solid state imaging device capable of reducing generation of a white point (point of a primary color in the case of a color CCD) due to a dark current at the time of long-time exposure with a small exposure amount.

In the imaging apparatus according to the embodiment of the present invention, a noise in an imaged image can be reduced because the solid state imaging device capable of suppressing a dark current is used. As a result, there is an advantage that a high-quality image can be recorded. In particular, generation of a white point (point of a primary color in the case of a color CCD) due to a dark current at the time of long-time exposure with a small exposure amount can be reduced.

BRIEF DESCRIPTION OF THE DRAWINGS

FIG. **1** is a cross-sectional view illustrating the configuration of main parts in a solid state imaging device (first solid state imaging device) according to an embodiment (first example) of the present invention;

FIG. **2** is an energy band view explaining an effect of the solid state imaging device (first solid state imaging device) according to the embodiment of the present invention;

FIG. **3** is a cross-sectional view illustrating the configuration of main parts in a modification of the solid state imaging device (first solid state imaging device);

FIG. **4** is a cross-sectional view illustrating the configuration of main parts in a modification of the solid state imaging device (first solid state imaging device);

FIG. **5** is a cross-sectional view illustrating the configuration of main parts for explaining negative electric charges in a case when a layer having negative electric charges is in the neighborhood on a peripheral circuit section;

FIG. **6** is a cross-sectional view illustrating the configuration of main parts in a solid state imaging device (first solid state imaging device) according to an embodiment (second example) of the present invention;

FIG. **7** is a cross-sectional view illustrating the configuration of main parts in a solid state imaging device (first solid state imaging device) according to an embodiment (third example) of the present invention;

FIG. **8** is a cross-sectional view illustrating a manufacturing process in a method (first manufacturing method) of manufacturing a solid state imaging device according to an embodiment (first example) of the present invention;

FIG. **9** is a cross-sectional view illustrating a manufacturing process in a method (first manufacturing method) of manufacturing a solid state imaging device according to an embodiment (first example) of the present invention;

FIG. **10** is a cross-sectional view illustrating a manufacturing process in a method (first manufacturing method) of manufacturing a solid state imaging device according to an embodiment (first example) of the present invention;

FIG. **11** is a cross-sectional view illustrating a manufacturing process in a method (first manufacturing method) of manufacturing a solid state imaging device according to an embodiment (second example) of the present invention;

FIG. **12** is a cross-sectional view illustrating a manufacturing process in a method (first manufacturing method) of manufacturing a solid state imaging device according to an embodiment (second example) of the present invention;

FIG. **13** is a cross-sectional view illustrating a manufacturing process in a method (first manufacturing method) of manufacturing a solid state imaging device according to an embodiment (second example) of the present invention;

FIG. **14** is a cross-sectional view illustrating a manufacturing process in a method (first manufacturing method) of manufacturing a solid state imaging device according to an embodiment (third example) of the present invention;

FIG. **15** is a cross-sectional view illustrating a manufacturing process in a method (first manufacturing method) of manufacturing a solid state imaging device according to an embodiment (third example) of the present invention;

FIG. **16** is a cross-sectional view illustrating a manufacturing process in a method (first manufacturing method) of manufacturing a solid state imaging device according to an embodiment (third example) of the present invention;

FIG. **17** is a cross-sectional view illustrating a manufacturing process in a method (first manufacturing method) of manufacturing a solid state imaging device according to an embodiment (fourth example) of the present invention;

FIG. **18** is a cross-sectional view illustrating a manufacturing process in a method (first manufacturing method) of manufacturing a solid state imaging device according to an embodiment (fourth example) of the present invention;

FIG. **19** is a cross-sectional view illustrating a manufacturing process in a method (first manufacturing method) of manufacturing a solid state imaging device according to an embodiment (fourth example) of the present invention;

FIG. **20** is a cross-sectional view illustrating a manufacturing process in a method (first manufacturing method) of manufacturing a solid state imaging device according to an embodiment (fifth example) of the present invention;

FIG. **21** is a cross-sectional view illustrating a manufacturing process in a method (first manufacturing method) of manufacturing a solid state imaging device according to an embodiment (fifth example) of the present invention;

FIG. **22** is a view illustrating the relationship between a flat band voltage and an oxide layer conversion thickness, which shows that negative electric charges exist in a hafnium oxide (HfO_2) layer;

FIG. **23** is a view for comparison of the interface state density, which illustrates that negative electric charges exist in a hafnium oxide (HfO_2) layer;

FIG. **24** is a view illustrating the relationship between a flat band voltage and an oxide layer conversion thickness, which explains formation of electrons and holes based on a thermally oxidized layer;

FIG. **25** is a cross-sectional view illustrating a manufacturing process in a method (first manufacturing method) of manufacturing a solid state imaging device according to an embodiment (sixth example) of the present invention;

FIG. **26** is a view illustrating the C-V (capacitance-voltage) characteristic of the solid state imaging device using a layer having negative electric charges manufactured in the sixth example of the first manufacturing method;

FIG. **27** is a view illustrating the C-V (capacitance-voltage) characteristic of the solid state imaging device using a layer having negative electric charges manufactured in the sixth example of the first manufacturing method;

FIG. **28** is a view illustrating the C-V (capacitance-voltage) characteristic of the solid state imaging device using a layer having negative electric charges manufactured in the sixth example of the first manufacturing method;

FIG. **29** is a cross-sectional view illustrating the configuration of main parts in a solid state imaging device (second solid state imaging device) according to an embodiment (first example) of the present invention;

FIG. **30** is a cross-sectional view illustrating the configuration of main parts in a solid state imaging device (second solid state imaging device) according to an embodiment (second example) of the present invention;

FIG. **31** is a cross-sectional view illustrating a manufacturing process in a method (second manufacturing method) of manufacturing a solid state imaging device according to an embodiment (first example) of the present invention;

FIG. **32** is a cross-sectional view illustrating a manufacturing process in a method (second manufacturing method) of manufacturing a solid state imaging device according to an embodiment (first example) of the present invention;

FIG. **33** is a cross-sectional view illustrating a manufacturing process in a method (second manufacturing method) of manufacturing a solid state imaging device according to an embodiment (first example) of the present invention;

FIG. **34** is a cross-sectional view illustrating a manufacturing process in a method (second manufacturing method) of manufacturing a solid state imaging device according to an embodiment (second example) of the present invention;

FIG. **35** is a cross-sectional view illustrating a manufacturing process in a method (second manufacturing method) of manufacturing a solid state imaging device according to an embodiment (second example) of the present invention;

FIG. **36** is a cross-sectional view illustrating the configuration of main parts in a solid state imaging device (third solid state imaging device) according to an embodiment (example) of the present invention;

FIG. **37** is a cross-sectional view of the configuration of main parts, which illustrates an example of a solid state imaging device that uses an auxiliary hole accumulation layer;

FIG. **38** is a flow chart illustrating a method (third manufacturing method) of manufacturing a solid state imaging device according to an embodiment (example) of the present invention;

FIG. **39** is a cross-sectional view illustrating a manufacturing process in a method (third manufacturing method) of manufacturing a solid state imaging device according to an embodiment (example) of the present invention;

FIG. **40** is a cross-sectional view illustrating a process of manufacturing main parts in a method (third manufacturing

method) of manufacturing a solid state imaging device according to an embodiment (example) of the present invention;

FIG. **41** is a block diagram illustrating an imaging apparatus according to an embodiment of the present invention; and

FIG. **42** is a cross-sectional view illustrating the schematic configuration of a light sensing section, which shows a technique of suppressing generation of a dark current caused by the interface state.

DESCRIPTION OF THE PREFERRED EMBODIMENTS

A solid state imaging device (first solid state imaging device) according to an embodiment (first example) of the present invention will be described with reference to a cross-sectional view of FIG. **1** illustrating the configuration of main parts.

As shown in FIG. **1**, a solid state imaging device **1** includes a light sensing section **12**, which performs photoelectric conversion of incident light L, in a semiconductor substrate (or a semiconductor layer) **11**. On a side portion of the light sensing section **12**, a peripheral circuit section **14** in which a peripheral circuit (not specifically shown) is formed with a pixel separating region **13** interposed therebetween is provided. The following explanation will be made using the semiconductor substrate **11**. On a light receiving surface **12***s* of the light sensing section (including a hole accumulation layer **23** which will be described later) **12**, an interface state lowering layer **21** is formed. The interface state lowering layer **21** is formed of a silicon oxide (SiO_2) layer, for example. On the interface state reducing layer **21**, a layer **22** having negative electric charges is formed. Thus, the hole accumulation layer **23** is formed at the light receiving surface side of the light sensing section **12**. Accordingly, at least on the light sensing section **12**, the interface state reducing layer **21** is formed in a film thickness that the hole accumulation layer **23** is formed at a side of the light receiving surface **12***s* of the light sensing section **12** by the layer **22** having negative electric charges. For example, the film thickness is set to be equal to or larger than one atomic layer and equal to or smaller than 100 nm.

In the case when the solid state imaging device **1** is a CMOS image sensor, for example, a pixel circuit configured to include transistors, such as a transfer transistor, a reset transistor, an amplifying transistor, and a selection transistor, is provided as a peripheral circuit of the peripheral circuit section **14**. In addition, a driving circuit which performs an operation of reading a signal on a read line of a pixel array section formed by the plurality of light sensing sections **12**, a vertical scanning circuit which transmits the read signal, a shift register or an address decoder, a horizontal scanning circuit, and the like are included.

Moreover, in the case when the solid state imaging device **1** is a CCD image sensor, for example, a read gate which reads a signal charge photoelectrically converted by the light sensing section to a vertical transfer gate and a vertical charge transfer section which transmits the read signal charge in the vertical direction are provided as the peripheral circuit of the peripheral circuit section **14**. In addition, a horizontal charge transfer section and the like are included.

The layer **22** having negative electric charges is formed of a hafnium oxide (HfO_2) layer, an aluminum oxide (Al_2O_3) layer, a zirconium oxide (ZrO_2) layer, a tantalum oxide (Ta_2O_5) layer, or a titanium oxide (TiO_2) layer, for example. Such kinds of layers have been used as a gate insulating layer of an insulated gate field effect transistor and the like. Accordingly, since a layer forming method is known, the layers can be easily formed. Examples of the layer forming method include a chemical vapor deposition method, a sputtering method, and an atomic layer deposition method. Here, it is preferable to use the atomic layer deposition method because an SiO_2 layer which lowers the interface state can be simultaneously formed in a thickness of 1 nm during the film formation. In addition, as materials other than those described above, a lanthanum oxide (La_2O_3), a praseodymium oxide (Pr_2O_3), a cerium oxide (CeO_2), a neodymium oxide (Nd_2O_3), a promethium oxide (Pm_2O_3), a samarium oxide (Sm_2O_3), an europium oxide (Eu_2O_3), a gadolinium oxide (Gd_2O_3), a terbium oxide (Tb_2O_3), a dysprosium oxide (Dy_2O_3), a holmium oxide (Ho_2O_3), an erbium oxide (Er_2O_3), a thulium oxide (Tm_2O_3), an ytterbium oxide (Yb_2O_3), a lutetium oxide (Lu_2O_3), an yttrium oxide (Y_2O_3), and the like may be mentioned. In addition, the layer **22** having negative electric charges may also be formed of a hafnium nitride layer, an aluminum nitride layer, a hafnium oxynitride layer, or an aluminum oxynitride layer.

The layer **22** having negative electric charges may have silicon (Si) or nitrogen (N) added in a range in which an insulation property is not adversely affected. The concentration is appropriately determined in a range in which an insulation property of the layer is not adversely affected. Thus, it becomes possible to raise the thermal resistance of the layer or an ability to prevent implantation of ions during a process by adding the silicon (Si) or the nitrogen (N).

An insulating layer **41** is formed on the layer **22** having negative electric charges, and a light shielding layer **42** is formed on the insulating layer **41** positioned above the peripheral circuit section **14**. A region where light is not incident on the light sensing section **12** is generated by the light shielding layer **42**, and a black level in an image is determined by an output of the light sensing section **12**. In addition, since it is prevented light from being incident on the peripheral circuit section **14**, a characteristic change caused by light incident on the peripheral circuit section is suppressed. Moreover, an insulating layer **43** which allows the incident light to be transmitted therethrough is formed. It is preferable that a surface of the insulating layer **43** be flat. Furthermore, a color filter layer **44** and a condensing lens **45** are formed on the insulating layer **43**.

In the solid state imaging device (first solid state imaging device) **1**, the layer **22** having negative electric charges is formed on the interface state reducing layer **21**. Accordingly, an electric field is applied to a surface of the light sensing section **12** through the interface state reducing layer **21** by negative electric charges in the layer **22** having negative electric charges, such that the hole accumulation layer **23** is formed on the surface of the light sensing section **12**.

In addition, as shown in (**1**) of FIG. **2**, the neighborhood of the interface can be used as the hole accumulation layer **23** by the negative electric charges present in the layer from immediately after forming the layer **22** having negative electric charges. Accordingly, a dark current generated by the interface state on the interface between the light sensing section **12** and the interface state reducing layer **21** is suppressed. That is, electric charges (electrons) generated from the interface is suppressed. In addition, even if electric charges (electrons) are generated from the interface, the electric charges (electrons) do not flow to a charge accumulation portion which is a potential well in the light sensing section **12** but flow to the hole accumulation layer **23** in which many holes exist and accordingly, the electric charges (electrons) can be eliminated. As a result, since it can be prevented that a dark current

generated by the electric charges on the interface is detected in the light sensing section **12**, a dark current caused by the interface state is suppressed.

On the other hand, in a configuration in which the hole accumulation layer is not provided as shown in (**2**) of FIG. **2**, a dark current is generated due to the interface state. As a result, a problem that the dark current flows to the light sensing section **12** occurs. In addition, in a configuration in which the hole accumulation layer **23** is formed by ion implantation as shown in (**3**) of FIG. **2**, the hole accumulation layer **23** is formed. However, since heat treatment at high temperature of 700° C. or more is essential in order to activate impurities doped in the ion implantation as described above, the impurities are diffused to extend the hole accumulation layer of the interface. As a result, since a region where photoelectric conversion occurs becomes narrow, it becomes difficult to obtain a desired photoelectric conversion characteristic.

Furthermore, in the solid state imaging device **1**, generation of electrons due to the interface state is further suppressed since the interface state reducing layer **21** is formed on the light receiving surface **12***s* of the light sensing section **12**. As a result, it is suppressed that electrons generated due to the interface state flow to the light sensing section **12** as a dark current.

Furthermore, in the case of using a hafnium oxide layer as the layer **22** having negative electric charges, it becomes possible to obtain an anti-reflection effect as well as to form an HAD structure by optimizing the film thickness, since the refractive index of the hafnium oxide layer is about 2. Also in the case of materials other than the hafnium oxide layer, it becomes possible to obtain the anti-reflection effect with a material having a high refractive index by optimizing the film thickness.

In addition, in the case where a silicon oxide and a silicon nitride that have been used in a known solid state imaging device are formed at low temperature, it is known that electric charges in a layer become positive charges. In this case, it is difficult to form the HAD structure with negative electric charges.

Next, a modification of the solid state imaging device (first solid state imaging device) **1** will be described with reference to a cross-sectional view of FIG. **3** illustrating the configuration of main parts.

As shown in FIG. **3**, a solid state imaging device **2** has an anti-reflection layer **46** formed on the layer **22** having negative electric charges, in the case when the anti-reflection effect on the light sensing section **12** is not sufficient only with the layer **22** having negative electric charges in the solid state imaging device **1**. The anti-reflection layer **46** is formed of a silicon nitride layer, for example. In addition, the insulating layer **43** formed in the solid state imaging device **1** is not formed. Accordingly, a color filter layer **44** and a condensing lens **45** are formed on the anti-reflection layer **46**. Thus, it becomes possible to maximize the anti-reflection effect by additionally forming the silicon nitride layer. This configuration may also be applied to a solid state imaging device **3** to be described later.

Thus, since reflection before light is incident on the light sensing section **12** can be reduced by forming the anti-reflection layer **46**, the amount of light incident on the light sensing section **12** can be increased. As a result, the sensitivity of the solid state imaging device **2** can be improved.

Next, a modification of the solid state imaging device (first solid state imaging device) **1** will be described with reference to a cross-sectional view of FIG. **4** illustrating the configuration of main parts.

As shown in FIG. **4**, a solid state imaging device **3** is obtained by directly forming the light shielding layer **42** on the layer **22** having negative electric charges without forming the insulating layer **41** in the solid state imaging device **1**. In addition, the insulating layer **43** is not formed but the anti-reflection layer **46** is formed.

Thus, since the light shielding layer **42** is directly formed on the layer **22** having negative electric charges, the light shielding layer **42** can be brought close to the surface of the semiconductor substrate **11**. As a result, since a distance between the light shielding layer **42** and the semiconductor substrate **11** can be narrowed, light components obliquely incident from an upper layer of a neighboring light sensing section (photodiode), that is, optical mixed color components can be reduced.

Furthermore, when the layer **22** having negative electric charges is in the neighborhood on the peripheral circuit section **14** as shown in FIG. **5**, a dark current generated due to the interface state on the surface of the light sensing section **12** can be suppressed by the hole accumulation layer **23** formed by the negative electric charges of the layer **22** having negative electric charges. However, in the peripheral circuit section **14**, a potential difference occurs between a side of the light sensing section **12** and an element **14**D existing on a surface side. Accordingly, unexpected carriers flow from the surface of the light sensing section **12** to the surface-side element **14**D, resulting in malfunction of the peripheral circuit section **14**. The configurations for avoiding such malfunction will be described in the following second and third examples.

Next, a solid state imaging device (first solid state imaging device) according to an embodiment (second example) of the present invention will be described with reference to a cross-sectional view of FIG. **6** illustrating the configuration of main parts. In addition, in FIG. **6**, a light shielding layer for shielding a part of a light sensing section and a peripheral circuit section, a color filter layer for spectral filtering of light incident on the light sensing section, a condensing lens for condensing light incident on the light sensing section, and the like are not shown.

As shown in FIG. **6**, in a solid state imaging device **4**, an insulating layer **24** is formed between the surface of the peripheral circuit section **14** and the layer **22** having negative electric charges such that a distance of the layer **22** having negative electric charges from the surface of the peripheral circuit section **14** is larger than a distance of the layer **22** having negative electric charges from the surface of the light sensing section **12** in the solid state imaging device **1**. The insulating layer **24** may be obtained by forming the interface state lowering layer **21** on the peripheral circuit section **14** to be thicker than that on the light sensing section **12**, when the interface state lowering layer **21** is formed of a silicon oxide layer.

Thus, since the insulating layer **24** is formed between the surface of the peripheral circuit section **14** and the layer **22** having negative electric charges such that the distance of the layer **22** having negative electric charges from the surface of the peripheral circuit section **14** is larger than the distance of the layer **22** having negative electric charges from the light sensing section **12**, a peripheral circuit of the peripheral circuit section **14** is not affected by the electric field of negative electric charges in the layer **22** having negative electric charges. As a result, it is possible to prevent the peripheral circuit from malfunctioning due to the negative electric charges.

Next, a solid state imaging device (first solid state imaging device) according to an embodiment (third example) of the

present invention will be described with reference to a cross-sectional view of FIG. **7** illustrating the configuration of main parts. In addition, in FIG. **7**, a light shielding layer for shielding a part of a light sensing section and a peripheral circuit section, a color filter layer for spectral filtering of light incident on the light sensing section, a condensing lens for condensing light incident on the light sensing section, and the like are not shown.

As shown in FIG. **7**, a solid state imaging device **5** is obtained by forming a layer **25** for increasing a distance between the layer having negative electric charges and the light receiving surface between the peripheral circuit section **14** and the layer **22** having negative electric charges in the solid state imaging device **1**. It is preferable that the layer **25** having positive electric charges in order to eliminate an influence of the negative electric charges, and it is preferable to use a silicon nitride for the layer **25**.

Thus, since the layer **25** having positive electric charges is formed between the peripheral circuit section **14** and the layer **22** having negative electric charges, the negative electric charges of the layer **22** having negative electric charges can be reduced by the positive electric charges in the layer **25**. Accordingly, the peripheral circuit section **14** is not affected by the electric field of the negative electric charges in the layer **22** having negative electric charges. As a result, it is possible to prevent the peripheral circuit section **14** from malfunctioning due to the negative electric charges. As described above, the configuration in which the layer **25** having positive electric charges is formed between the peripheral circuit section **14** and the layer **22** having negative electric charges may also be applied to the solid state imaging devices **1**, **2**, **3**, and **4**, and the same effects as in the solid state imaging device **5** can be obtained.

Each of the solid state imaging devices **4** and **5** is configured such that a light shielding layer for shielding a part of the light sensing section **12** and the peripheral circuit section **14**, a color filter layer for spectral filtering of light incident on at least the light sensing section **12**, a condensing lens for condensing light incident on the light sensing section **12**, and the like are provided on the layer **22** having negative electric charges. As an example of such a configuration, any one of the configurations of the solid state imaging devices **1**, **2**, and **3** may also be applied.

Next, a method (first manufacturing method) of manufacturing a solid state imaging device according to an embodiment (first example) of the present invention will be described with reference to cross-sectional views of a manufacturing process of FIGS. **8** to **10** illustrating main parts. In FIGS. **8** to **10**, a manufacturing process of the solid state imaging device **1** is shown as an example.

As shown in (**1**) of FIG. **8**, the light sensing section **12** which performs photoelectric conversion of incident light, the pixel separating region **13** for separating the light sensing section **12**, the peripheral circuit section **14** in which a peripheral circuit (not specifically shown) is formed with the pixel separating region **13** interposed between the peripheral circuit section **14** and the light sensing section **12**, and the like are formed in the semiconductor substrate (or semiconductor layer) **11**. A known manufacturing method is used as the manufacturing method.

Then, as shown in (**2**) of FIG. **8**, the interface state lowering layer **21** is formed on the light receiving surface **12***s* of the light sensing section **12**, actually, on the semiconductor substrate **11**. The interface state lowering layer **21** is formed of a silicon oxide (SiO_2) layer, for example. Subsequently, the layer **22** having negative electric charges is formed on the interface state lowering layer **21**. Thus, the hole accumulation layer **23** is formed at the light receiving surface side of the light sensing section **12**. Accordingly, at least on the light sensing section **12**, the interface state lowering layer **21** needs to be formed in a film thickness that the hole accumulation layer **23** is formed at a side of the light receiving surface **12***s* of the light sensing section **12** by the layer **22** having negative electric charges. For example, the film thickness is set to be equal to or larger than one atomic layer and equal to or smaller than 100 nm.

The layer **22** having negative electric charges is formed of a hafnium oxide (HfO_2) layer, an aluminum oxide (Al_2O_3) layer, a zirconium oxide (ZrO_2) layer, a tantalum oxide (Ta_2O_5) layer, or a titanium oxide (TiO_2) layer, for example. Such kinds of layers have been used as a gate insulating layer of an insulated gate field effect transistor and the like. Accordingly, since a layer forming method is known, the layers can be easily formed. For example, a chemical vapor deposition method, a sputtering method, and an atomic layer deposition method may be used as the layer forming method. Here, it is preferable to use the atomic layer deposition method because an SiO_2 layer which lowers the interface state can be simultaneously formed in a thickness of 1 nm during the film formation.

In addition, as materials other than those described above, a lanthanum oxide (La_2O_3), a praseodymium oxide (Pr_2O_3), a cerium oxide (CeO_2), a neodymium oxide (Nd_2O_3), a promethium oxide (Pm_2O_3), a samarium oxide (Sm_2O_3), an europium oxide (Eu_2O_3), a gadolinium oxide (Gd_2O_3), a terbium oxide (Tb_2O_3), a dysprosium oxide (Dy_2O_3), a holmium oxide (Ho_2O_3), an erbium oxide (Er_2O_3), a thulium oxide (Tm_2O_3), an ytterbium oxide (Yb_2O_3), a lutetium oxide (Lu_2O_3), an yttrium oxide (Y_2O_3), and the like may be used. In addition, the layer **22** having negative electric charges may also be formed of a hafnium nitride layer, an aluminum nitride layer, a hafnium oxynitride layer, or an aluminum oxynitride layer. These layers may also be formed by using the chemical vapor deposition, the sputtering method, or the atomic layer deposition, for example.

In addition, the layer **22** having negative electric charges may have silicon (Si) or nitrogen (N) added in a range in which an insulation property is not adversely affected. The concentration is appropriately determined in a range in which an insulation property of the layer is not adversely affected. Thus, it becomes possible to raise the thermal resistance of the layer or an ability to prevent implantation of ions during a process by adding the silicon (Si) or the nitrogen (N).

In addition, in the case of forming the layer **22** having negative electric charges with a hafnium oxide (HfO_2) layer, it becomes possible to obtain the anti-reflection effect efficiently by adjusting the film thickness, since the refractive index of the hafnium oxide (HfO_2) layer is about 2. Naturally, also for other kinds of layers, the anti-reflection effect can be obtained by optimizing the film thickness according to the refractive index.

Then, the insulating layer **41** is formed on the layer **22** having negative electric charges, and then the light shielding layer **42** is formed on the insulating layer **41**. The insulating layer **41** is formed of a silicon oxide layer, for example. In addition, the light shielding layer **42** is formed of a metallic layer having a light shielding property, for example. Thus, reaction of metal of the light shielding layer **42** and the layer **22** having negative electric charges formed of a hafnium oxide layer, for example, can be prevented by forming the light shielding layer **42** on the layer **22** having negative electric charges with the insulating layer **41** interposed therebetween. In addition, since the insulating layer **42** serves as an

etching stopper when the light shielding layer is etched, etching damage to the layer **22** having negative electric charges can be prevented.

Then, as shown in (**3**) of FIG. **9**, a resist mask (not shown) is formed on a part of the light sensing section **12** and the light shielding layer **42** positioned above the peripheral circuit section **14** by resist application and lithography technique and then the light shielding layer **42** is processed by etching using the resist mask to thereby make the light shielding layer **42** left on the part of the light sensing section **12** and the insulating layer **41** positioned above the peripheral circuit section **14**. A region where light is not incident on the light sensing section **12** is generated by the light shielding layer **42**, and a black level in an image is determined by an output of the light sensing section **12**. In addition, since it is prevented light from being incident on the peripheral circuit section **14**, a characteristic change caused by light incident on the peripheral circuit section is suppressed.

Then, as shown in (**4**) of FIG. **9**, the insulating layer **43** for reducing a level difference caused by the light shielding layer **42** is formed on the insulating layer **41**. A surface of the insulating layer **43** is preferably flat and is formed of a coating insulating layer, for example.

Then, as shown in (**5**) of FIG. **10**, the color filter layer **44** is formed on the insulating layer **43** positioned above the light sensing section **12** and then the condensing lens **45** is formed on the color filter layer **44** by a known manufacturing technique. In this case, a light-transmissive insulating layer (not shown) may be formed between the color filter layer **44** and the condensing lens **45** in order to prevent machining damage to the color filter layer **44** at the time of lens processing. Thus, the solid state imaging device **1** is formed.

In the first example of the method (first manufacturing method) of manufacturing a solid state imaging device, the layer **22** having negative electric charges is formed on the interface state lowering layer **21**. Accordingly, by the electric field generated by negative electric charges in the layer **22** having negative electric charges, the hole accumulation layer **23** is sufficiently formed on the light-receiving-surface-side interface of the light sensing section **12**. Accordingly, electric charges (electrons) generated from the interface is suppressed. In addition, even if electric charges (electrons) are generated from the interface, the electric charges (electrons) do not flow to a charge accumulation portion which is a potential well in the light sensing section **12** but flow to the hole accumulation layer **23** in which many holes exist. As a result, the electric charges (electrons) can be eliminated. Thus, since it can be prevented that a dark current generated by the electric charges on the interface is detected in the light sensing section, a dark current caused by the interface state is suppressed. Furthermore, generation of electrons due to the interface state is further suppressed since the interface state lowering layer **21** is formed on the light receiving surface of the light sensing section **12**. As a result, it is suppressed that electrons generated due to the interface state flow to the light sensing section **12** as a dark current. In addition, by using the layer **22** having negative electric charges, the HAD structure can be formed without ion implantation and annealing.

Next, a method (first manufacturing method) of manufacturing a solid state imaging device according to an embodiment (second example) of the present invention will be described with reference to cross-sectional views of a manufacturing process of FIGS. **11** to **13** illustrating main parts. In FIGS. **11** to **13**, a manufacturing process of the solid state imaging device **2** is shown as an example.

As shown in (**1**) of FIG. **11**, the light sensing section **12** which performs photoelectric conversion of incident light, the pixel separating region **13** for separating the light sensing section **12**, the peripheral circuit section **14** in which a peripheral circuit (not specifically shown) is formed with the pixel separating region **13** interposed between the peripheral circuit section **14** and the light sensing section **12**, and the like are formed in the semiconductor substrate (or semiconductor layer) **11**. A known manufacturing method is used as the manufacturing method.

Then, as shown in (**2**) of FIG. **11**, the interface state lowering layer **21** is formed on the light receiving surface **12***s* of the light sensing section **12**, actually, on the semiconductor substrate **11**. The interface state lowering layer **21** is formed of a silicon oxide (SiO_2) layer, for example. Subsequently, the layer **22** having negative electric charges is formed on the interface state lowering layer **21**. Thus, the hole accumulation layer **23** is formed at the light receiving surface side of the light sensing section **12**. Accordingly, at least on the light sensing section **12**, the interface state lowering layer **21** needs to be formed in a film thickness that the hole accumulation layer **23** is formed at a side of the light receiving surface **12***s* of the light sensing section **12** by the layer **22** having negative electric charges. For example, the film thickness is set to be equal to or larger than one atomic layer and equal to or smaller than 100 nm.

The layer **22** having negative electric charges is formed of a hafnium oxide (HfO_2) layer, an aluminum oxide (Al_2O_3) layer, a zirconium oxide (ZrO_2) layer, a tantalum oxide (Ta_2O_5) layer, or a titanium oxide (TiO_2) layer, for example. Such kinds of layers have been used as a gate insulating layer of an insulated gate field effect transistor and the like. Accordingly, since a layer forming method is known, the layers can be easily formed. For example, the chemical vapor deposition method, the sputtering method, and the atomic layer deposition method may be used as the layer forming method.

In addition, as materials other than those described above, a lanthanum oxide (La_2O_3), a praseodymium oxide (Pr_2O_3), a cerium oxide (CeO_2), a neodymium oxide (Nd_2O_3), a promethium oxide (Pm_2O_3), a samarium oxide (Sm_2O_3), an europium oxide (Eu_2O_3), a gadolinium oxide (Gd_2O_3), a terbium oxide (Tb_2O_3), a dysprosium oxide (Dy_2O_3), a holmium oxide (Ho_2O_3), an erbium oxide (Er_2O_3), a thulium oxide (Tm_2O_3), an ytterbium oxide (Yb_2O_3), a lutetium oxide (Lu_2O_3), an yttrium oxide (Y_2O_3), and the like may be used. In addition, the layer **22** having negative electric charges may also be formed of a hafnium nitride layer, an aluminum nitride layer, a hafnium oxynitride layer, or an aluminum oxynitride layer. These layers may also be formed by using the chemical vapor deposition, the sputtering method, or the atomic layer deposition, for example. Here, it is preferable to use the atomic layer deposition method because an SiO_2 layer which lowers the interface state can be simultaneously formed in a thickness of 1 nm during the film formation.

In addition, the layer **22** having negative electric charges may have silicon (Si) or nitrogen (N) added in a range in which an insulation property is not adversely affected. The concentration is appropriately determined in a range in which an insulation property of the layer is not adversely affected. Thus, it becomes possible to raise the thermal resistance of the layer or an ability to prevent implantation of ions during a process by adding the silicon (Si) or the nitrogen (N).

In addition, in the case of forming the layer **22** having negative electric charges with a hafnium oxide (HfO_2) layer, it becomes possible to obtain the anti-reflection effect efficiently by adjusting the film thickness, since the refractive index of the hafnium oxide (HfO_2) layer is about 2. Naturally,

also for other kinds of layers, the anti-reflection effect can be obtained by optimizing the film thickness according to the refractive index.

Then, the insulating layer **41** is formed on the layer **22** having negative electric charges, and then the light shielding layer **42** is formed on the insulating layer **41**. The insulating layer **41** is formed of a silicon oxide layer, for example. In addition, the light shielding layer **42** is formed of a metallic layer having a light shielding property, for example. Thus, reaction of metal of the light shielding layer **42** and the layer **22** having negative electric charges formed of a hafnium oxide layer, for example, can be prevented by forming the light shielding layer **42** on the layer **22** having negative electric charges with the insulating layer **41** interposed therebetween. In addition, since the insulating layer **42** serves as an etching stopper when the light shielding layer is etched, etching damage to the layer **22** having negative electric charges can be prevented.

Then, as shown in (**3**) of FIG. **12**, a resist mask (not shown) is formed on a part of the light sensing section **12** and the light shielding layer **42** positioned above the peripheral circuit section **14** by resist application and lithography technique and then the light shielding layer **42** is processed by etching using the resist mask to thereby make the light shielding layer **42** left on the part of the light sensing section **12** and the insulating layer **41** positioned above the peripheral circuit section **14**. A region where light is not incident on the light sensing section **12** is generated by the light shielding layer **42**, and a black level in an image is determined by an output of the light sensing section **12**. In addition, since it is prevented light from being incident on the peripheral circuit section **14**, a characteristic change caused by light incident on the peripheral circuit section is suppressed.

Then, as shown in (**4**) of FIG. **12**, the anti-reflection layer **46** is formed on the insulating layer **41** to cover the light shielding layer **42**. The anti-reflection layer **46** is formed of a silicon nitride layer having a refractive index of about 2, for example.

Then, as shown in (**5**) of FIG. **13**, the color filter layer **44** is formed on the anti-reflection layer **46** positioned above the light sensing section **12** and then the condensing lens **45** is formed on the color filter layer **44** by a known manufacturing technique. In this case, a light-transmissive insulating layer (not shown) may be formed between the color filter layer **44** and the condensing lens **45** in order to prevent machining damage to the color filter layer **44** at the time of lens processing. Thus, the solid state imaging device **2** is formed.

In the second example of the method (first manufacturing method) of manufacturing a solid state imaging device, the same effects as in the first example can be obtained and reflection before light is incident on the light sensing section **12** can be reduced by forming the anti-reflection layer **46**. As a result, since the amount of light incident on the light sensing section **12** can be increased, the sensitivity of the solid state imaging device **2** can be improved.

Next, a method (first manufacturing method) of manufacturing a solid state imaging device according to an embodiment (third example) of the present invention will be described with reference to cross-sectional views of a manufacturing process of FIGS. **14** to **16** illustrating main parts. In FIGS. **14** to **16**, a manufacturing process of the solid state imaging device **3** is shown as an example.

As shown in (**1**) of FIG. **14**, the light sensing section **12** which performs photoelectric conversion of incident light, the pixel separating region **13** for separating the light sensing section **12**, the peripheral circuit section **14** in which a peripheral circuit (not specifically shown) is formed with the pixel separating region **13** interposed between the peripheral circuit section **14** and the light sensing section **12**, and the like are formed in the semiconductor substrate (or semiconductor layer) **11**. A known manufacturing method is used as the manufacturing method.

Then, as shown in (**2**) of FIG. **14**, the interface state lowering layer **21** is formed on the light receiving surface **12***s* of the light sensing section **12**, actually, on the semiconductor substrate **11**. The interface state lowering layer **21** is formed of a silicon oxide (SiO_2) layer, for example. Subsequently, the layer **22** having negative electric charges is formed on the interface state lowering layer **21**. Thus, the hole accumulation layer **23** is formed at the light receiving surface side of the light sensing section **12**. Accordingly, at least on the light sensing section **12**, the interface state lowering layer **21** needs to be formed in a film thickness that the hole accumulation layer **23** is formed at a side of the light receiving surface **12***s* of the light sensing section **12** by the layer **22** having negative electric charges. For example, the film thickness is set to be equal to or larger than one atomic layer and equal to or smaller than 100 nm.

The layer **22** having negative electric charges is formed of a hafnium oxide (HfO_2) layer, an aluminum oxide (Al_2O_3) layer, a zirconium oxide (ZrO_2) layer, a tantalum oxide (Ta_2O_5) layer, or a titanium oxide (TiO_2) layer, for example. Such kinds of layers have been used as a gate insulating layer of an insulated gate field effect transistor and the like. Accordingly, since a layer forming method is known, the layers can be easily formed. For example, a chemical vapor deposition method, a sputtering method, and an atomic layer deposition method may be used as the layer forming method. Here, it is preferable to use the atomic layer deposition method because an SiO_2 layer which lowers the interface state can be simultaneously formed in a thickness of 1 nm during the film formation.

In addition, as materials other than those described above, a lanthanum oxide (La_2O_3), a praseodymium oxide (Pr_2O_3), a cerium oxide (CeO_2), a neodymium oxide (Nd_2O_3), a promethium oxide (Pm_2O_3), a samarium oxide (Sm_2O_3), an europium oxide (Eu_2O_3), a gadolinium oxide (Gd_2O_3), a terbium oxide (Tb_2O_3), a dysprosium oxide (Dy_2O_3), a holmium oxide (Ho_2O_3), an erbium oxide (Er_2O_3), a thulium oxide (Tm_2O_3), an ytterbium oxide (Yb_2O_3), a lutetium oxide (Lu_2O_3), an yttrium oxide (Y_2O_3), and the like may be used. In addition, the layer **22** having negative electric charges may also be formed of a hafnium nitride layer, an aluminum nitride layer, a hafnium oxynitride layer, or an aluminum oxynitride layer. These layers may also be formed by using the chemical vapor deposition, the sputtering method, or the atomic layer deposition, for example.

In addition, the layer **22** having negative electric charges may have silicon (Si) or nitrogen (N) added in a range in which an insulation property is not adversely affected. The concentration is appropriately determined in a range in which an insulation property of the layer is not adversely affected. Thus, it becomes possible to raise the thermal resistance of the layer or an ability to prevent implantation of ions during a process by adding the silicon (Si) or the nitrogen (N).

In addition, in the case of forming the layer **22** having negative electric charges with a hafnium oxide (HfO_2) layer, it becomes possible to obtain the anti-reflection effect efficiently by adjusting the film thickness of the hafnium oxide (HfO_2) layer. Naturally, also for other kinds of layers, the anti-reflection effect can be obtained by optimizing the film thickness according to the refractive index.

Then, the light shielding layer **42** is formed on the layer **22** having negative electric charges. The light shielding layer **42**

is formed of a metallic layer having a light shielding property, for example. Thus, since the light shielding layer **42** is directly formed on the layer **22** having negative electric charges, the light shielding layer **42** can be brought close to the surface of the semiconductor substrate **11**. As a result, since a distance between the light shielding layer **42** and the semiconductor substrate **11** can be narrowed, light components obliquely incident from an upper layer of a neighboring photodiode, that is, optical mixed color components can be reduced.

Then, as shown in (**3**) of FIG. **15**, a resist mask (not shown) is formed on a part of the light sensing section **12** and the light shielding layer **42** positioned above the peripheral circuit section **14** by resist application and lithography technique and then the light shielding layer **42** is processed by etching using the resist mask to thereby make the light shielding layer **42** left on the part of the light sensing section **12** and the layer **22** having negative electric charges positioned above the peripheral circuit section **14**. A region where light is not incident on the light sensing section **12** is generated by the light shielding layer **42**, and a black level in an image is determined by an output of the light sensing section **12**. In addition, since it is prevented light from being incident on the peripheral circuit section **14**, a characteristic change caused by light incident on the peripheral circuit section is suppressed.

Then, as shown in (**4**) of FIG. **15**, the anti-reflection layer **46** is formed on the layer **22** having negative electric charges so as to cover the light shielding layer **42**. The anti-reflection layer **46** is formed of a silicon nitride layer having a refractive index of about 2, for example.

Then, as shown in (**5**) of FIG. **16**, the color filter layer **44** is formed on the anti-reflection layer **46** positioned above the light sensing section **12** and then the condensing lens **45** is formed on the color filter layer **44** by a known manufacturing technique. In this case, a light-transmissive insulating layer (not shown) may be formed between the color filter layer **44** and the condensing lens **45** in order to prevent machining damage to the color filter layer **44** at the time of lens processing. Thus, the solid state imaging device **3** is formed.

In the third example of the method (first manufacturing method) of manufacturing a solid state imaging device, the same effects as in the first example can be obtained and the light shielding layer **42** can be brought close to the surface of the semiconductor substrate **11** by directly forming the light shielding layer **42** on the layer **22** having negative electric charges. As a result, since a distance between the light shielding layer **42** and the semiconductor substrate **11** can be narrowed, light components obliquely incident from an upper layer of a neighboring photodiode, that is, optical mixed color components can be reduced. In addition, the anti-reflection effect can be maximized by forming the anti-reflection layer **46** when the anti-reflection effect is not sufficient only with the layer **22** having negative electric charges.

Next, a method (first manufacturing method) of manufacturing a solid state imaging device according to an embodiment (fourth example) of the present invention will be described with reference to cross-sectional views of a manufacturing process of FIGS. **17** to **19** illustrating main parts. In FIGS. **17** to **19**, a manufacturing process of the solid state imaging device **4** is shown as an example.

As shown in (**1**) of FIG. **17**, the light sensing section **12** which performs photoelectric conversion of incident light, the pixel separating region **13** for separating the light sensing section **12**, the peripheral circuit section **14** in which a peripheral circuit (for example, a circuit **14**C) is formed with the pixel separating region **13** interposed between the peripheral circuit section **14** and the light sensing section **12**, and the like are formed in the semiconductor substrate (or semiconductor layer) **11**. A known manufacturing method is used as the manufacturing method. Then, an insulating layer **26** which allows the incident light to be transmitted therethrough is formed. The insulating layer **26** is formed of a silicon oxide layer, for example.

Then, as shown in (**2**) of FIG. **17**, a resist mask **51** is formed on the insulating layer **26** positioned above the peripheral circuit section **14** by using resist application and lithography technique.

Then, as shown in (**3**) of FIG. **18**, the insulating layer **26** is processed by etching using the resist mask **51** (refer to (**2**) of FIG. **17**), leaving the insulating layer **26** on the peripheral circuit section **14**. Then, the resist mask **51** is removed.

Then, as shown in (**4**) of FIG. **18**, the interface state lowering layer **21** which covers the insulating layer **26** is formed on the light receiving surface **12***s* of the light sensing section **12**, actually, on the semiconductor substrate **11**. The interface state lowering layer **21** is formed of a silicon oxide (SiO_2) layer, for example.

Then, as shown in (**5**) of FIG. **19**, the layer **22** having negative electric charges is formed on the interface state lowering layer **21**. Thus, the hole accumulation layer **23** is formed at the light receiving surface side of the light sensing section **12**. Accordingly, at least on the light sensing section **12**, the interface state lowering layer **21** needs to be formed in a film thickness that the hole accumulation layer **23** is formed at a side of the light receiving surface **12***s* of the light sensing section **12** by the layer **22** having negative electric charges. For example, the film thickness is set to be equal to or larger than one atomic layer and equal to or smaller than 100 nm.

The layer **22** having negative electric charges is formed of a hafnium oxide (HfO_2) layer, an aluminum oxide (Al_2O_3) layer, a zirconium oxide (ZrO_2) layer, a tantalum oxide (Ta_2O_5) layer, or a titanium oxide (TiO_2) layer, for example. Such kinds of layers have been used as a gate insulating layer of an insulated gate field effect transistor and the like. Accordingly, since a layer forming method is known, the layers can be easily formed. For example, a chemical vapor deposition method, a sputtering method, and an atomic layer deposition method may be used as the layer forming method. Here, it is preferable to use the atomic layer deposition method because an SiO_2 layer which lowers the interface state can be simultaneously formed in a thickness of 1 nm during the film formation.

In addition, as materials other than those described above, a lanthanum oxide (La_2O_3), a praseodymium oxide (Pr_2O_3), a cerium oxide (CeO_2), a neodymium oxide (Nd_2O_3), a promethium oxide (Pm_2O_3), a samarium oxide (Sm_2O_3), an europium oxide (Eu_2O_3), a gadolinium oxide (Gd_2O_3), a terbium oxide (Tb_2O_3), a dysprosium oxide (Dy_2O_3), a holmium oxide (Ho_2O_3), an erbium oxide (Er_2O_3), a thulium oxide (Tm_2O_3), an ytterbium oxide (Yb_2O_3), a lutetium oxide (Lu_2O_3), an yttrium oxide (Y_2O_3), and the like may be used. In addition, the layer **22** having negative electric charges may also be formed of a hafnium nitride layer, an aluminum nitride layer, a hafnium oxynitride layer, or an aluminum oxynitride layer. These layers may also be formed by using the chemical vapor deposition, the sputtering method, or the atomic layer deposition, for example.

In addition, the layer **22** having negative electric charges may have silicon (Si) or nitrogen (N) added in a range in which an insulation property is not adversely affected. The concentration is appropriately determined in a range in which an insulation property of the layer is not adversely affected. Thus, it becomes possible to raise the thermal resistance of

the layer or an ability to prevent implantation of ions during a process by adding the silicon (Si) or the nitrogen (N).

In addition, in the case of forming the layer **22** having negative electric charges with a hafnium oxide (HfO_2) layer, it becomes possible to obtain the anti-reflection effect efficiently by adjusting the film thickness, since the refractive index of the hafnium oxide (HfO_2) layer is about 2. Naturally, also for other kinds of layers, the anti-reflection effect can be obtained by optimizing the film thickness according to the refractive index.

The solid state imaging device **4** is configured such that a light shielding layer for shielding a part of the light sensing section **12** and the peripheral circuit section **14**, a color filter layer for spectral filtering of light incident on at least the light sensing section **12**, a condensing lens for condensing light incident on the light sensing section **12**, and the like are provided on the layer **22** having negative electric charges. As an example of such a configuration, any one of the configurations of the solid state imaging devices **1**, **2**, and **3** may also be applied.

In the fourth example of the method (first manufacturing method) of manufacturing a solid state imaging device, the layer **22** having negative electric charges is formed on the interface state lowering layer **21**. Accordingly, by the electric field generated by negative electric charges in the layer **22** having negative electric charges, the hole accumulation layer **23** is sufficiently formed on the light-receiving-surface-side interface of the light sensing section **12**. Accordingly, electric charges (electrons) generated from the interface can be suppressed. In addition, even if electric charges (electrons) are generated from the interface, the electric charges (electrons) do not flow to a charge accumulation portion which is a potential well in the light sensing section **12** but flow to the hole accumulation layer **23** in which many holes exist. As a result, the electric charges (electrons) can be eliminated. Thus, since it can be prevented that a dark current generated by the electric charges on the interface is detected in the light sensing section, a dark current caused by the interface state is suppressed. Furthermore, generation of electrons due to the interface state is further suppressed since the interface state lowering layer **21** is formed on the light receiving surface of the light sensing section **12**. As a result, it is suppressed that electrons generated due to the interface state flow to the light sensing section **12** as a dark current. In addition, by using the layer **22** having negative electric charges, the HAD structure can be formed without ion implantation and annealing.

In addition, since the insulating layer **26** is formed on the peripheral circuit section **14**, a distance to the layer **22** having negative electric charges on the peripheral circuit section **14** becomes larger than a distance to the layer having negative electric charges on the light sensing section **12**. As a result, the negative electric field applied from the layer **22** having negative electric charges to the peripheral circuit section **14** is reduced. That is, since an influence of the layer **22** having negative electric charges on the peripheral circuit section **14** is reduced, malfunction of the peripheral circuit section **14** caused by the negative electric field generated by the layer **22** having negative electric charges is prevented.

Next, a method (first manufacturing method) of manufacturing a solid state imaging device according to an embodiment (fifth example) of the present invention will be described with reference to cross-sectional views of a manufacturing process of FIGS. **20** and **21** illustrating main parts. In FIGS. **20** and **21**, a manufacturing process of the solid state imaging device **4** is shown as an example.

As shown in (**1**) of FIG. **20**, the light sensing section **12** which performs photoelectric conversion of incident light, the pixel separating region **13** for separating the light sensing section **12**, the peripheral circuit section **14** in which a peripheral circuit (for example, a circuit **14**C) is formed with the pixel separating region **13** interposed between the peripheral circuit section **14** and the light sensing section **12**, and the like are formed in the semiconductor substrate (or semiconductor layer) **11**. A known manufacturing method is used as the manufacturing method. Then, the interface state lowering layer **21** which allows the incident light to be transmitted therethrough is formed. The interface state lowering layer **21** is formed of a silicon oxide layer, for example. Then, a layer **25** for separating the layer having negative electric charges from the surface of the light receiving surface is formed on the interface state lowering layer **21**. It is preferable that the layer **25** having positive electric charges in order to eliminate an influence of the negative electric charges, and it is preferable to use a silicon nitride for the layer **25**.

At least on the light sensing section **12**, the interface state lowering layer **21** needs to be formed in a film thickness that the hole accumulation layer **23**, which will be described later, is formed at a side of the light receiving surface **12***s* of the light sensing section **12** by the layer **22** having negative electric charges formed later. For example, the film thickness is set to be equal to or larger than one atomic layer and equal to or smaller than 100 nm.

Then, as shown in (**2**) of FIG. **20**, a resist mask **52** is formed on the layer **25** having positive electric charges positioned above the peripheral circuit section **14** by using resist application and lithography technique.

Then, as shown in (**3**) of FIG. **21**, the layer **25** having positive electric charges is processed by etching using the resist mask **52** (refer to (**2**) of FIG. **20**), leaving the layer **25** having positive electric charges on the peripheral circuit section **14**. Then, the resist mask **52** is removed.

Then, as shown in (**4**) of FIG. **21**, the layer **22** having negative electric charges which covers the layer **25** having positive electric charges is formed on the interface state lowering layer **21**.

The layer **22** having negative electric charges is formed of a hafnium oxide (HfO_2) layer, an aluminum oxide (Al_2O_3) layer, a zirconium oxide (ZrO_2) layer, a tantalum oxide (Ta_2O_5) layer, or a titanium oxide (TiO_2) layer, for example. Such kinds of layers have been used as a gate insulating layer of an insulated gate field effect transistor and the like. Accordingly, since a layer forming method is known, the layers can be easily formed. For example, a chemical vapor deposition method, a sputtering method, and an atomic layer deposition method may be used as the layer forming method. Here, it is preferable to use the atomic layer deposition method because an SiO_2 layer which lowers the interface state can be simultaneously formed in a thickness of 1 nm during the film formation.

In addition, as materials other than those described above, a lanthanum oxide (La_2O_3), a praseodymium oxide (Pr_2O_3), a cerium oxide (CeO_2), a neodymium oxide (Nd_2O_3), a promethium oxide (Pm_2O_3), a samarium oxide (Sm_2O_3), an europium oxide (Eu_2O_3), a gadolinium oxide (Gd_2O_3), a terbium oxide (Tb_2O_3), a dysprosium oxide (Dy_2O_3), a holmium oxide (Ho_2O_3), an erbium oxide (Er_2O_3), a thulium oxide (Tm_2O_3), an ytterbium oxide (Yb_2O_3), a lutetium oxide (Lu_2O_3), an yttrium oxide (Y_2O_3), and the like may be used. In addition, the layer **22** having negative electric charges may also be formed of a hafnium nitride layer, an aluminum nitride layer, a hafnium oxynitride layer, or an aluminum oxynitride layer. These layers may also be formed by using the chemical vapor deposition, the sputtering method, or the atomic layer deposition, for example.

In addition, the layer **22** having negative electric charges may have silicon (Si) or nitrogen (N) added in a range in which an insulation property is not adversely affected. The concentration is appropriately determined in a range in which an insulation property of the layer is not adversely affected. Thus, it becomes possible to raise the thermal resistance of the layer or an ability to prevent implantation of ions during a process by adding the silicon (Si) or the nitrogen (N).

In addition, in the case of forming the layer **22** having negative electric charges with a hafnium oxide (HfO_2) layer, it becomes possible to obtain the anti-reflection effect efficiently by adjusting the film thickness of the hafnium oxide (HfO_2) layer. Naturally, also for other kinds of layers, the anti-reflection effect can be obtained by optimizing the film thickness according to the refractive index.

The solid state imaging device **5** is configured such that a light shielding layer for shielding a part of the light sensing section **12** and the peripheral circuit section **14**, a color filter layer for spectral filtering of light incident on at least the light sensing section **12**, a condensing lens for condensing light incident on the light sensing section **12**, and the like are provided on the layer **22** having negative electric charges. As an example of such a configuration, any one of the configurations of the solid state imaging devices **1**, **2**, and **3** may also be applied.

In the fifth example of the method (first manufacturing method) of manufacturing a solid state imaging device, the layer **22** having negative electric charges is formed on the interface state lowering layer **21**. Accordingly, by the electric field generated by negative electric charges in the layer **22** having negative electric charges, the hole accumulation layer **23** is sufficiently formed on the light-receiving-surface-side interface of the light sensing section **12**. Accordingly, electric charges (electrons) generated from the interface can be suppressed. In addition, even if electric charges (electrons) are generated from the interface, the electric charges (electrons) do not flow to a charge accumulation portion which is a potential well in the light sensing section **12** but flow to the hole accumulation layer **23** in which many holes exist. As a result, the electric charges (electrons) can be eliminated. Thus, since it can be prevented that a dark current generated by the electric charges on the interface is detected in the light sensing section, a dark current caused by the interface state is suppressed. Furthermore, generation of electrons due to the interface state is further suppressed since the interface state lowering layer **21** is formed on the light receiving surface of the light sensing section **12**. As a result, it is suppressed that electrons generated due to the interface state flow to the light sensing section **12** as a dark current. In addition, by using the layer **22** having negative electric charges, the HAD structure can be formed without ion implantation and annealing.

In addition, since the layer **25** which preferably has positive electric charges and serves to separate the layer having negative electric charges from the surface of the light receiving surface is formed between the peripheral circuit section **14** and the layer **22** having negative electric charges, the negative electric charges of the layer **22** having negative electric charges is reduced by the positive electric charges in the layer **25** having positive electric charges. Accordingly, the peripheral circuit section **14** is not affected by the electric field of the negative electric charges in the layer **22** having negative electric charges. As a result, it is possible to prevent the peripheral circuit section **14** from malfunctioning due to the negative electric charges.

Here, it will be described below that negative electric charges exist in the hafnium oxide (HfO_2) layer which is an example of the layer having negative electric charges.

As a first sample, one which is a MOS capacitor having a gate electrode formed on a silicon substrate with a thermally-oxidized silicon (SiO_2) layer interposed therebetween and in which the film thickness of the thermally-oxidized silicon layer is changed is prepared.

As a second sample, one which is a MOS capacitor having a gate electrode formed on a silicon substrate with a CVD silicon oxide (CVD-SiO_2) layer interposed therebetween and in which the film thickness of the CVD silicon oxide layer is changed is prepared.

As a third sample, one which is a MOS capacitor having a gate electrode formed on a silicon substrate with a laminated layer, which is obtained by sequentially laminating an ozone-silicon oxide (O_3—SiO_2) layer, a hafnium oxide (HfO_2) layer, and a CVD silicon oxide (SiO_2) layer, interposed therebetween and in which the film thickness of the CVD silicon oxide layer is changed is prepared. In addition, the film thicknesses of the HfO_2 layer and $\mathbf{0}_3$-SiO_2 layer are fixed.

The CVD-SiO_2layer of each sample is formed by a CVD method of using mixed gas of monosilane (SiH_4) and oxygen (O_2), and the HfO_2 layer is formed by an ALD method of using tetrakisethylmethyl-amino hafnium (TEMAHf) and ozone (O_3) as materials. The O_3—SiO_2 layer of the third sample is an interface oxide layer which has a thickness of about 1 nm and is formed between the HfO_2 layer and the silicon substrate when forming the HfO_2 layer in the ALD method. For each gate electrode in each of the samples, a structure in which an aluminum (Al) layer, a titanium nitride (TiN) layer, and a titanium (Ti) layer are laminated from above is used.

In the above sample structures, the gate electrode is formed immediately on the SiO_2 layer in the case of the first and second samples, but the CVD-SiO_2 layer is laminated on the HfO_2 layer only in the case of the third sample where the HfO_2 layer is applied. This is to prevent the HfO_2 and the electrode from reacting with each other on the interface when the HfO_2 and the gate electrode are made to come in direct contact with each other.

Furthermore, in the laminated structure of the third sample, the thickness of the HfO_2 layer is fixed to 10 nm and the film thickness of the upper CVD-SiO_2 layer is changed. The reason is because the HfO_2 has a large relative permittivity and accordingly, the HfO_2 layer has a thickness of several nanometers when the thickness is calculated as a thickness of the oxide layer even if the HfO_2 layer is formed in a film thickness of 10 nm. As a result, it becomes difficult to see a change of a flat band voltage Vfb with respect to an oxide layer conversion thickness.

For the first, second, and third samples, the flat band voltage Vfb according to an oxide layer conversion thickness Tox has been examined. The result is shown in FIG. **22**.

As shown in FIG. **22**, in the cases of the first sample of the thermally-oxidized (Thermal-SiO_2) layer and second sample of the CVD-SiO_2 layer, the flat band voltage shifts in a minus direction according to an increase in the film thickness. On the other hand, only in the third sample where the HfO_2 layer is applied, it has been confirmed that the flat band voltage shifts in a plus direction according to the increase in film thickness. By the behavior of the flat band voltage, it can be seen that negative electric charges exist in the HfO_2 layer. In addition, it can be seen that each material, which forms a layer having negative electric charges, other than the HfO_2 also has negative electric charges, similar to the HfO_2.

In addition, data of the interface state density in each sample is shown in FIG. **23**. In FIG. **23**, comparison of the

interface state density Dit has been performed by using the first, second, and third samples in which Tox in FIG. **22** is almost equal in about 40 nm.

As a result, as shown in FIG. **23**, while the first sample of the thermally-oxidized (Thermal-SiO_2) layer has a characteristic of 2E10 (/cm^2·eV) or less, the interface state is reduced by about one order of magnitude in the second sample of the CVD-SiO_2 layer. On the other hand, in the case of the third sample using the HfO_2 layer, it has been confirmed that about 3E10/cm^2·eV and a good interface close to the thermally oxidized layer. In addition, it can be seen that each material, which forms a layer having negative electric charges, other than the HfO_2 also has the good interface close to the thermally oxidized layer, similar to the HfO_2.

Next, a flat band voltage Vfb with respect to the oxide layer conversion thickness Tox when the layer **25** having positive electric charges was formed has been examined. The result is shown in FIG. **24**.

As shown in FIG. **24**, in a case larger than the flat band voltage of the thermally oxidized layer, a hole is formed on a surface of the silicon (Si) because a negative electric charge exists in the layer. An example of such a laminated layer includes one obtained by laminating an HfO_2 layer and a CVD-SiO_2 layer on a surface of a silicon (Si) substrate sequentially from below. On the other hand, in a case smaller than the flat band voltage of the thermally oxidized layer, an electron is formed on the silicon (Si) surface because a positive electric charge exists in the layer. An example of such a laminated layer includes one obtained by laminating a CVD-SiO_2 layer, a CVD-SiN layer, an HfO_2 layer, and a CVD-SiO_2 layer on a surface of a silicon (Si) substrate sequentially from below. Here, when the film thickness of the CVD-SiN layer is made large, a flat band voltage becomes large compared with a thermally oxidized layer, shifting in the negative direction. Furthermore, an influence of the negative electric charges of the hafnium oxide (HfO_2) is eliminated by the positive electric charges in the CVD-SiN layer.

In the solid state imaging devices **1** to **5** in the above examples, in the case of containing nitrogen (N) in the layer **22** having negative electric charges as described above, the nitrogen (N) may be contained by nitriding treatment using high-frequency plasma or microwave plasma after forming the layer **22** having negative electric charges. In addition, the negative electric charges in the layer may be increased by executing electron beam curing processing using electron beam irradiation on the layer **22** having negative electric charges after forming the layer **22** having negative electric charges.

Next, a preferable manufacturing method (sixth example) when a hafnium oxide is used for the layer **22** having negative electric charges which has been used in the methods of manufacturing a solid state imaging device in the first to fifth examples of the present invention will be described below with reference to FIG. **25**. As an example, FIG. **25** shows a case suitable for the first example of the first manufacturing method. A method of forming the layer having negative electric charges in the embodiment of the present invention may also be applied to methods of forming the layer having negative electric charges in the second to fifth examples of the first manufacturing method in the same manner.

When the layer **22** having negative electric charges is formed of a hafnium oxide using an atomic layer deposition method (ALD method), the film quality is excellent. However, there is a problem that it takes a time for film formation. Therefore, as shown in (**1**) of FIG. **25**, there is prepared the semiconductor substrate (or semiconductor layer) **11** in which the light sensing section **12** which performs photoelectric conversion of incident light, the pixel separating region **13** for separating the light sensing section **12**, the peripheral circuit section **14** having a peripheral circuit (not specifically shown) formed with the pixel separating region **13** interposed between the peripheral circuit section **14** and the light sensing section **12**, and the like are formed, and the interface state lowering layer **21** is formed on the light receiving surface **12***s* of the light sensing section **12**, actually, on the semiconductor substrate **11**. Then, a first hafnium oxide layer **22-1** is formed on the interface state lowering layer **21** using the atomic layer deposition method. The first hafnium oxide layer **22-1** is formed in a film thickness of at least 3 nm of the film thickness required for the layer **22** having negative electric charges.

In an example of a film forming condition of the atomic layer deposition method (ALD method) for forming the first hafnium oxide layer **22-1**, TEMA-Hf (tetrakis ethylmethylamido hafnium), TDMA-Hf (tetrakis dimethylamido hafnium) or TDEA-Hf (tetrakis diethylamido hafnium) is used as a precursor, the temperature of the substrate at the time of film formation is set to 200° C. to 500° C., the flow rate of precursor is set to 10 cm^3/min to 500 cm^3/min, the irradiation time of precursor is 1 second to 15 seconds, and the flow rate of ozone (O_3) is set to 5 cm^3/min to 50 cm^3/min.

Alternatively, the first hafnium oxide layer **22-1** may also be formed by using a metal organic chemical vapor deposition (MOCVD method). In an example of a film forming condition in the case, TEMA-Hf (tetrakis ethylmethylamido hafnium), TDMA-Hf (tetrakis dimethylamido hafnium) or TDEA-Hf (tetrakis diethylamido hafnium) is used as a precursor, the temperature of the substrate at the time of film formation is set to 200° C. to 600° C., the flow rate of precursor is set to 10 cm^3/min to 500 cm^3/min, the irradiation time of precursor is 1 second to 15 seconds, and the flow rate of ozone (O_3) is set to 5 cm^3/min to 50 cm^3/min.

Then, as shown in (**2**) of FIG. **25**, a second hafnium oxide layer **22-2** is formed on the first hafnium oxide layer **22-1** by using a physical vapor deposition method (PVD method), completing the layer **22** having negative electric charges. For example, the film formation is performed such that the film thickness including the first hafnium oxide layer **22-1** and the second hafnium oxide layer **22-2** is set to 50 nm to 60 nm. Then, as described in the first to fifth examples, subsequent processing for forming the insulating layer **41** on the layer **22** having negative electric charges is performed.

In an example of a film forming condition in the physical vapor deposition method (PVD method) for forming the second hafnium oxide layer **22-2**, a hafnium metal target is used as a target, argon and oxygen are used as process gas, the pressure of film forming atmosphere is set to 0.01 Pa to 50 Pa, power is set to 500 W to 2.00 kW, the flow rate of argon (Ar) is set to 5 cm^3/min to 50 cm^3/min, and the flow rate of oxygen (O_2) is set to 5 cm^3/min to 50 cm^3/min.

Next, the C-V (capacitance-voltage) characteristic of the solid state imaging device has been examined in a condition that the thickness of the layer **22** having negative electric charges, which is formed of a hafnium oxide, is set to 60 nm and the thickness of the first hafnium oxide layer **22-1** is used as a parameter. The result is shown in FIGS. **26** and **27**. In FIGS. **26** and **27**, a vertical axis indicates a capacitance (C) and a horizontal axis indicates a voltage (V).

As shown in FIG. **26**, in the case when a hafnium oxide (HfO_2) layer is formed only by the PVD method, the flat band voltage Vfb is −1.32 V which is a negative voltage. This is not sufficient for a layer having negative electric charges. In order to be a layer having negative electric charges, the flat band voltage Vfb needs to be a positive voltage. In addition, since a rising edge is blunt, the interface state density is increased.

In this case, it was evaluated that the interface state density Dit was too high to be applied, which will be described later.

On the other hand, in the case when the first hafnium oxide layer **22-1** is formed in a thickness of 3 nm by using the ALD method and then the second hafnium oxide layer **22-2** is formed on the first hafnium oxide layer **22-1** in a thickness of 50 nm by using the PVD method, the flat band voltage Vfb is +0.42 V which is a positive voltage. Accordingly, the layer having negative electric charges is obtained. In addition, since a rising edge is sharp, the interface state density Dit is low, resulting in Dit=5.14E10/cm^2·eV.

In addition, in the case when the first hafnium oxide layer **22-1** is formed in a thickness of 11 nm by using the ALD method and then the second hafnium oxide layer **22-2** is formed on the first hafnium oxide layer **22-1** in a thickness of 50 nm by using the PVD method, the flat band voltage Vfb becomes a positive voltage which is further increased. Accordingly, the layer having negative electric charges is obtained. In addition, since a rising edge is sharper, the interface state density Dit is low.

Furthermore, as shown in FIG. **27**, in the case when the first hafnium oxide layer **22-1** is formed in a thickness of 11 nm by using the ALD method and then the second hafnium oxide layer **22-2** is formed on the first hafnium oxide layer **22-1** in a thickness of 50 nm by using the PVD method, the flat band voltage Vfb close to that in a case when the entire layer **22** having negative electric charges is formed by using the ALD method and the rising edge also has an almost similar state.

Next, for the layer having negative electric charges obtained by forming the first hafnium oxide layer **22-1** in a thickness of **11** nm and then forming the second hafnium oxide layer **22-2** on the first hafnium oxide layer **22-1** in a thickness of 50 nm using the PVD method, typical measurement (Qs-CV: Quasi-static-CV) of the C-V characteristic using a direct current and measurement (Hf—CV) using a high frequency were performed. The Qs-CV measurement is a measurement method of sweeping a gate voltage as a linear function of time and calculating a displacement current flowing between a gate and a substrate. From this, a capacitance in a low-frequency region is obtained. The result is shown in FIG. **28**. In addition, the interface state density Dit is calculated from a difference between a measurement value of Qs-CV and a measurement value of Hf-CV. As a result, since the interface state density Dit becomes 5.14E10/cm^2·eV, a sufficiently low value is obtained. In addition, as described above, since the flat band voltage Vfb is +0.42V, a positive voltage is obtained.

Thus, by forming the first hafnium oxide layer **22-1** in a thickness of 3 nm or more, a value of the flat band voltage Vfb of the layer **22** having negative electric charges can be set to have a positive voltage and the interface state density Dit can be made low. Accordingly, the first hafnium oxide layer **22-1** is preferably formed in a film thickness of at least 3 nm of the film thickness required for the layer **22** having negative electric charges.

The first hafnium oxide layer **22-1** is a layer formed by the atomic layer deposition method. If the film thickness is smaller than 3 nm in forming the hafnium oxide layer using the atomic layer deposition method, interface damage resulting from the PVD method occurs when the following second hafnium oxide layer **22-2** is formed by using the PVD method. However, if the thickness of the first hafnium oxide layer **22-1** is 3 nm or more, the interface damage is suppressed even if the following second hafnium oxide layer **22-2** is formed by using the PVD method. Thus, by setting the thickness of the first hafnium oxide layer **22-1** to 3 nm or more so that the interface damage resulting from the PVD method is suppressed, a value of the flat band voltage Vfb of a layer including the first hafnium oxide layer **22-1** and the second hafnium oxide layer **22-2** becomes a positive voltage. As a result, the layer including the first hafnium oxide layer **22-1** and the second hafnium oxide layer **22-2** becomes a layer having negative electric charges. For this reason, the first hafnium oxide layer **22-1** formed at a side of the interface with the interface state lowering layer **21** is made to have a film thickness of 3 nm or more. In addition, an example of the PVD method includes a sputtering method.

On the other hand, if the entire layer **22** having negative electric charges is formed by using the atomic layer deposition method, an excellent C-V characteristic is obtained, but the productivity significantly lowers because it takes too much time to form the layer. For this reason, the thickness of the first hafnium oxide layer **22-1** cannot be made too large. In the atomic layer deposition method, it takes about 45 minutes to form a hafnium oxide layer in a thickness of 10 nm, for example. On the other hand, in the case of a physical vapor deposition method, it takes about 3 minutes to form a hafnium oxide layer in a thickness of 50 nm, for example. Accordingly, an upper limit of the thickness of the first hafnium oxide layer **22-1** is determined taking the productivity into consideration. For example, when the layer forming time of the layer **22** having negative electric charges is set to 1 hour or less, the upper limit of the thickness of the first hafnium oxide layer **22-1** is about 11 nm to 12 nm. Thus, in the case of a layer forming method in which the atomic layer deposition method and the physical vapor deposition method are used together, the layer forming time can be noticeably shortened compared with the case where the entire layer **22** having negative electric charges is formed by using the atomic layer deposition method or the CVD method. As a result, the mass production efficiency is improved. Furthermore, in the case of the atomic layer deposition method or the MOCVD method, there is almost no damage given to a substrate compared with a case of forming a layer using the physical vapor deposition method. Thus, since the damage to the light receiving sensor portion is reduced, a problem that the interface state density, which is a cause of generation of a dark current, becomes large can be solved.

Until now, the case in which the layer **22** having negative electric charges is formed of the hafnium oxide layer has been described. As the layer **22** having negative electric charges, however, the above-mentioned layers, for example, the aluminum oxide (Al_2O_3) layer, the zirconium oxide (ZrO_2) layer, the tantalum oxide (Ta_2O_5) layer, the titanium oxide (TiO_2) layer, the lanthanum oxide (La_2O_3), the praseodymium oxide (Pr_2O_3), the cerium oxide (CeO_2), the neodymium oxide (Nd_2O_3), the promethium oxide (Pm_2O_3), the samarium oxide (Sm_2O_3), the europium oxide (Eu_2O_3), the gadolinium oxide (Gd_2O_3), the terbium oxide (Tb_2O_3), the dysprosium oxide (Dy_2O_3), the holmium oxide (Ho_2O_3), the erbium oxide (Er_2O_3), the thulium oxide (Tm_2O_3), the ytterbium oxide (Yb_2O_3), the lutetium oxide (Lu_2O_3), the yttrium oxide (Y_2O_3), the hafnium nitride layer, the aluminum nitride layer, the hafnium oxynitride layer, or the aluminum oxynitride layer may also be used. Also in this case, the manufacturing method according to the embodiment of the present invention, in which layer formation is performed by using the atomic layer deposition method first and then layer formation is performed by using the physical vapor deposition method, may also be applied in the same manner. Thus, the same effects as in the case of the hafnium oxide layer can be acquired.

Next, a solid state imaging device (second solid state imaging device) according to an embodiment (first example) of the

present invention will be described with reference to a cross-sectional view of FIG. **29** illustrating the configuration of main parts. In addition, in FIG. **29**, a light shielding layer for shielding a part of a light sensing section and a peripheral circuit section, a color filter layer for spectral filtering of light incident on the light sensing section, a condensing lens for condensing light incident on the light sensing section, and the like are not shown.

As shown in FIG. **29**, a solid state imaging device **6** includes a light sensing section **12**, which performs photoelectric conversion of incident light, in a semiconductor substrate (or a semiconductor layer) **11**. On a side portion of the light sensing section **12**, a peripheral circuit section **14** in which a peripheral circuit (for example, a circuit **14**C) is formed with a pixel separating region **13** interposed therebetween is provided. On a light receiving surface **12***s* of the light sensing section (including a hole accumulation layer **23** which will be described later) **12**, an insulating layer **27** is formed. The insulating layer **27** is formed of a silicon oxide (SiO_2) layer, for example. A negative voltage applying layer **28** is formed on the insulating layer **27**.

In the drawing, the insulating layer **27** is formed thicker on the peripheral circuit section **14** than on the light sensing section **12** such that a distance of the negative voltage applying layer **28** from a surface of the peripheral circuit section **14** is larger than a distance of the negative voltage applying layer **28** from a surface of the light sensing section **12**. In addition, when the insulating layer **27** is formed of a silicon oxide layer, for example, the insulating layer **27** has the same operation as the interface state lowering layer **21**, which has been described earlier, on the light sensing section **12**. Accordingly, the insulating layer **27** on the light sensing section **12** is preferably formed in a film thickness of one or more atomic layers and 100 nm or less, for example. Thus, when a negative voltage is applied to the negative voltage applying layer **28**, a hole accumulation layer **23** is formed on a light receiving surface side of the light sensing section **12**.

In the case when the solid state imaging device **6** is a CMOS image sensor, for example, a pixel circuit configured to include transistors, such as a transfer transistor, a reset transistor, an amplifying transistor, and a selection transistor, is provided as a peripheral circuit of the peripheral circuit section **14**. In addition, a driving circuit which performs an operation of reading a signal on a read line of a pixel array section formed by the plurality of light sensing sections **12**, a vertical scanning circuit which transmits the read signal, a shift register or an address decoder, a horizontal scanning circuit, and the like are included.

Moreover, in the case when the solid state imaging device **6** is a CCD image sensor, for example, a read gate which reads a signal charge photoelectrically converted by the light sensing section to a vertical transfer gate and a vertical charge transfer section which transmits the read signal charge in the vertical direction are provided as the peripheral circuit of the peripheral circuit section **14**. In addition, a horizontal charge transfer section and the like are included.

The negative voltage applying layer **28** is formed of a transparent and conductive layer which allows incident light to be transmitted therethrough, for example, a transparent and conductive layer allows visible light to be transmitted therethrough. For example, an indium tin oxide layer, an indium zinc oxide layer, an indium oxide layer, a tin oxide layer, or a gallium zinc oxide layer may be used as such a layer.

The solid state imaging device **6** is configured such that a light shielding layer for shielding a part of the light sensing section **12** and the peripheral circuit section **14**, a color filter layer for spectral filtering of light incident on at least the light sensing section **12**, a condensing lens for condensing light incident on the light sensing section **12**, and the like are provided on the negative voltage applying layer **28**. As an example of such a configuration, any one of the configurations of the solid state imaging devices **1**, **2**, and **3** may also be applied.

In the solid state imaging device (second solid state imaging device) **6**, the negative voltage applying layer **28** is formed on the insulating layer **27** formed on the light receiving surface **12***s* of the light sensing section **12**. Accordingly, by the electric field generated by the negative voltage applied to the negative voltage applying layer **28**, a hole accumulation layer is sufficiently formed on the interface at a side of the light receiving surface **12***s* of the light sensing section **12**. Accordingly, electric charges (electrons) generated from the interface are suppressed. In addition, even if electric charges (electrons) are generated from the interface, the electric charges (electrons) do not flow to a charge accumulation portion which is a potential well in the light sensing section **12** but flow to the hole accumulation layer **23** in which many holes exist. As a result, the electric charges (electrons) can be eliminated. As a result, since it can be prevented that the electric charges generated due to the interface become a dark current and are detected by the light sensing section **12**, a dark current caused by the interface state is suppressed. Furthermore, generation of electrons due to the interface state is further suppressed since the insulating layer **27** serving as an interface state lowering layer is formed on the light receiving surface **12***s* of the light sensing section **12**. As a result, it is suppressed that electrons generated due to the interface state flow to the light sensing section **12** as a dark current.

Furthermore, as shown in the drawing, since the negative voltage applying layer **28** is formed such that the distance of the negative voltage applying layer **28** from the surface of the peripheral circuit section **14** is larger than the distance of the negative voltage applying layer **28** from the surface of the light sensing section **12** by the insulating layer **27**, an influence of the electric field, which is generated when a negative voltage is applied to the negative voltage applying layer **28**, on the peripheral circuit section **14** is reduced. As a result, circuit malfunction in the peripheral circuit section **14** can be eliminated.

Next, a solid state imaging device (second solid state imaging device) according to an embodiment (second example) of the present invention will be described with reference to a cross-sectional view of FIG. **30** illustrating the configuration of main parts. In addition, in FIG. **30**, a light shielding layer for shielding a part of a light sensing section and a peripheral circuit section, a color filter layer for spectral filtering of light incident on the light sensing section, a condensing lens for condensing light incident on the light sensing section, and the like are not shown.

As shown in FIG. **30**, a solid state imaging device **7** is obtained by forming a layer **25** for making a negative voltage applying layer distant from a light receiving surface on the peripheral circuit section **14**, substantially, between the insulating layer **27** and the negative voltage applying layer **28** in the solid state imaging device **6**. It is preferable that the layer **25** having positive electric charges in order to eliminate the influence of negative voltages. The layer **25** having positive electric charges is preferably formed between the peripheral circuit section **14** and the negative voltage applying layer **28**. Alternatively, the layer **25** having positive electric charges may be formed on the insulating layer **27** or below the insulating layer **27**. In addition, although the insulating layer **27** is formed as a layer having a uniform thickness in the drawing, the insulating layer **27** may also be formed thicker on the

peripheral circuit section **14** than on the light sensing section **12** like the solid state imaging device **6**.

An example of the layer **25** having positive electric charges includes a silicon nitride layer.

Thus, since the layer **25** having positive electric charges is formed between the peripheral circuit section **14** and the negative voltage applying layer **28**, the negative electric field generated when a negative voltage is applied to the negative voltage applying layer **28** is reduced by positive electric charges in the layer **25** having positive electric charges. Accordingly, the peripheral circuit section **14** is not affected by the negative electric field. As a result, since it can be prevented that the peripheral circuit section **14** malfunctions due to the negative electric field, the reliability of the peripheral circuit section **14** is improved. As described above, the configuration in which the layer **25** having positive electric charges is formed between the peripheral circuit section **14** and the negative voltage applying layer **28** may also be applied to the solid state imaging device **6**, and the same effects as in the solid state imaging device **7** can be obtained.

Next, a method (second manufacturing method) of manufacturing a solid state imaging device according to an embodiment (first example) of the present invention will be described with reference to cross-sectional views of a manufacturing process of FIGS. **31** to **33** illustrating main parts. In FIGS. **31** to **33**, a manufacturing process of the solid state imaging device **4** is shown as an example.

As shown in (**1**) of FIG. **31**, the light sensing section **12** which performs photoelectric conversion of incident light, the pixel separating region **13** for separating the light sensing section **12**, the peripheral circuit section **14** in which a peripheral circuit (for example, the circuit **14**C) is formed with the pixel separating region **13** interposed between the peripheral circuit section **14** and the light sensing section **12**, and the like are formed in the semiconductor substrate (or semiconductor layer) **11**. A known manufacturing method is used as the manufacturing method. Then, an insulating layer **29** which allows incident light to be transmitted therethrough is formed. The insulating layer **29** is formed of a silicon oxide layer, for example.

Then, as shown in (**2**) of FIG. **31**, a resist mask **53** is formed on the insulating layer **29** positioned above the peripheral circuit section **14** by using resist application and lithography technique.

Then, as shown in (**3**) of FIG. **32**, the insulating layer **29** is processed by etching using the resist mask **53** (refer to (**2**) of FIG. **31**), leaving the insulating layer **29** on the peripheral circuit section **14**. Then, the resist mask **53** is removed.

Then, as shown in (**4**) of FIG. **32**, the interface state lowering layer **21** which covers the insulating layer **26** is formed on the light receiving surface **12***s* of the light sensing section **12**, actually, on the semiconductor substrate **11**. The interface state lowering layer **21** is formed of a silicon oxide (SiO_2) layer, for example. Thus, the insulating layer **27** is formed by the insulating layer **29** and the interface state lowering layer **21**.

Then, as shown in (**5**) of FIG. **33**, the negative voltage applying layer **28** is formed on the interface state lowering layer **21**. The hole accumulation layer **23** is formed on a light receiving surface side of the light sensing section **12** by the negative voltage applied to the negative voltage applying layer **28**. Accordingly, at least on the light sensing section **12**, the interface state lowering layer **21** needs to be formed in a film thickness that the hole accumulation layer **23** is formed at a side of the light receiving surface **12***s* of the light sensing section **12** by the negative voltage applied to the negative voltage applying layer **28**. For example, the film thickness is set to be equal to or larger than one atomic layer and equal to or smaller than 100 nm.

The negative voltage applying layer **28** is formed of a transparent and conductive layer which allows incident light to be transmitted therethrough, for example, a transparent and conductive layer allows visible light to be transmitted therethrough. For example, an indium tin oxide layer, an indium zinc oxide layer, an indium oxide layer, a tin oxide layer, or a gallium zinc oxide layer may be used as such a layer.

A light shielding layer for shielding a part of the light sensing section **12** and the peripheral circuit section **14**, a color filter layer for spectral filtering of light incident on at least the light sensing section **12**, a condensing lens for condensing light incident on the light sensing section **12**, and the like are formed on the negative voltage applying layer **28** in the solid state imaging device **6**. Any method described in each example of the method (first manufacturing method) of manufacturing a solid state imaging device may be applied as an example of the manufacturing method.

In the first example of the method (second manufacturing method) of manufacturing the solid state imaging device **6**, the negative voltage applying layer **28** is formed on the insulating layer **27** formed on the light receiving surface **12***s* of the light sensing section **12**. Accordingly, by the electric field generated by the negative voltage applied to the negative voltage applying layer **28**, a hole accumulation layer is sufficiently formed on the interface at a side of the light receiving surface **12***s* of the light sensing section **12**. Accordingly, electric charges (electrons) generated from the interface can be suppressed. In addition, even if electric charges (electrons) are generated from the interface, the electric charges (electrons) do not flow to a charge accumulation portion which is a potential well in the light sensing section **12** but flow to the hole accumulation layer **23** in which many holes exist. As a result, the electric charges (electrons) can be eliminated. As a result, since it can be prevented that the electric charges generated due to the interface become a dark current and are detected by the light sensing section **12**, a dark current caused by the interface state is suppressed. Furthermore, generation of electrons due to the interface state is further suppressed since the interface state lowering layer **21** is formed on the light receiving surface **12***s* of the light sensing section **12**. As a result, it is suppressed that electrons generated due to the interface state flow to the light sensing section **12** as a dark current.

Furthermore, as shown in the drawing, the insulating layer **27** on the peripheral circuit section **14** is formed thicker than the insulating layer **27** on the light sensing section **12** such that the distance of the negative voltage applying layer **28** from the surface of the peripheral circuit section **14** is larger than the distance of the negative voltage applying layer **28** from the surface of the light sensing section **12** by the insulating layer **27**. Accordingly, an influence of the electric field, which is generated when a negative voltage is applied to the negative voltage applying layer **28**, on the peripheral circuit section **14** is reduced. That is, since the electric field strength is reduced and it is suppressed holes are accumulated on the surface of the peripheral circuit section **14**, circuit malfunction in the peripheral circuit section **14** can be eliminated.

Next, a method (second manufacturing method) of manufacturing a solid state imaging device according to an embodiment (second example) of the present invention will be described with reference to cross-sectional views of a manufacturing process of FIGS. **34** and **35** illustrating main parts. In FIGS. **34** and **35**, a manufacturing process of the solid state imaging device **4** is shown as an example.

As shown in (**1**) of FIG. **34**, the light sensing section **12** which performs photoelectric conversion of incident light, the pixel separating region **13** for separating the light sensing section **12**, the peripheral circuit section **14** in which a peripheral circuit (for example, the circuit **14**C) is formed with the pixel separating region **13** interposed between the peripheral circuit section **14** and the light sensing section **12**, and the like are formed in the semiconductor substrate (or semiconductor layer) **11**. A known manufacturing method is used as the manufacturing method. Then, the insulating layer **27** which allows incident light to be transmitted therethrough is formed. The insulating layer **27** is formed of a silicon oxide layer, for example. Then, the layer **25** having positive electric charges is formed on the insulating layer **27**. The layer **25** having positive electric charges is formed of a silicon nitride layer, for example.

Then, as shown in (**2**) of FIG. **34**, a resist mask **54** is formed on the layer **25** having positive electric charges positioned above the peripheral circuit section **14** by using resist application and lithography technique.

Then, as shown in (**3**) of FIG. **35**, the layer **25** having positive electric charges is processed by etching using the resist mask **54** (refer to (**2**) of FIG. **34**), leaving the layer **25** having positive electric charges on the peripheral circuit section **14**. Then, the resist mask **54** is removed.

Then, as shown in (**4**) of FIG. **35**, the negative voltage applying layer **28** is formed on the insulating layer **27** and the layer **25** having positive electric charges. The hole accumulation layer **23** is formed on a light receiving surface side of the light sensing section **12** by the negative voltage applied to the negative voltage applying layer **28**. In this case, the insulating layer **27** may be made to function as an interface state lowering layer. Accordingly, at least on the light sensing section **12**, the insulating layer **27** needs to be formed in a film thickness that the hole accumulation layer **23** is formed at a side of the light receiving surface **12***s* of the light sensing section **12** by the negative voltage applied to the negative voltage applying layer **28**. For example, the film thickness is set to be equal to or larger than one atomic layer and equal to or smaller than 100 nm.

The negative voltage applying layer **28** is formed of a transparent and conductive layer which allows incident light to be transmitted therethrough, for example, a transparent and conductive layer allows visible light to be transmitted therethrough. For example, an indium tin oxide layer, an indium zinc oxide layer, an indium oxide layer, a tin oxide layer, or a gallium zinc oxide layer may be used as such a layer.

Although not shown, a light shielding layer for shielding a part of the light sensing section **12** and the peripheral circuit section **14**, a color filter layer for spectral filtering of light incident on at least the light sensing section **12**, a condensing lens for condensing light incident on the light sensing section **12**, and the like are formed on the negative voltage applying layer **28** in the solid state imaging device **7**. Any method described in each example of the method (first manufacturing method) of manufacturing a solid state imaging device may be applied as an example of the manufacturing method.

In the second example of the method (second manufacturing method) of manufacturing the solid state imaging device **7**, the negative voltage applying layer **28** is formed on the insulating layer **27** formed on the light receiving surface **12***s* of the light sensing section **12**. Accordingly, by the electric field generated by the negative voltage applied to the negative voltage applying layer **28**, a hole accumulation layer is sufficiently formed on the interface at a side of the light receiving surface **12***s* of the light sensing section **12**. Accordingly, electric charges (electrons) generated from the interface can be suppressed. In addition, even if electric charges (electrons) are generated from the interface, the electric charges (electrons) do not flow to a charge accumulation portion which is a potential well in the light sensing section **12** but flow to the hole accumulation layer **23** in which many holes exist. As a result, the electric charges (electrons) can be eliminated. As a result, since it can be prevented that the electric charges generated due to the interface become a dark current and are detected by the light sensing section **12**, a dark current caused by the interface state is suppressed. Furthermore, generation of electrons due to the interface state is further suppressed since the interface state lowering layer **21** is formed on the light receiving surface **12***s* of the light sensing section **12**. As a result, it is suppressed that electrons generated due to the interface state flow to the light sensing section **12** as a dark current.

In addition, since the layer **25** having positive electric charges is formed between the peripheral circuit section **14** and the negative voltage applying layer **28**, the negative electric field generated when a negative voltage is applied to the negative voltage applying layer **28** is reduced by positive electric charges in the layer **25** having positive electric charges. Accordingly, the peripheral circuit section **14** is not affected by the negative electric field. As a result, it is possible to prevent the peripheral circuit section **14** from malfunctioning due to the negative electric field. As described above, the configuration in which the layer **25** having positive electric charges is formed between the peripheral circuit section **14** and the negative voltage applying layer **28** may also be applied to the solid state imaging device **6**, and the same effects as in the solid state imaging device **7** can be obtained.

Next, a solid state imaging device (third solid state imaging device) according to an embodiment (example) of the present invention will be described with reference to a cross-sectional view of FIG. **36** illustrating the configuration of main parts. In addition, in FIG. **36**, a light sensing section is mainly shown, but a peripheral circuit section, a wiring layer, a light shielding layer for shielding a part of the light sensing section and the peripheral circuit section, a color filter layer for spectral filtering of light incident on the light sensing section, a condensing lens for condensing light incident on the light sensing section, and the like are not shown.

As shown in FIG. **36**, a solid state imaging device **8** has a light sensing section **12**, which performs photoelectric conversion of incident light, on a semiconductor substrate (or semiconductor layer) **11**. An insulating layer **31** is formed on a side of the light receiving surface **12***s* of the light sensing section **12** and the insulating layer **31** is formed of a silicon oxide (SiO_2) layer, for example. On the insulating layer **31**, a layer (hereinafter, referred to as an auxiliary hole accumulation layer) **32** having a work function larger than the interface on a side of the light receiving surface **12***s* of the light sensing section **12** which performs photoelectric conversion is formed. By a difference between the work functions, the hole accumulation layer **23** is formed. The auxiliary hole accumulation layer **32** may be an insulating layer **21** or a conductive layer, such as a metallic layer since the auxiliary hole accumulation layer **32** does not need to be electrically connected to other elements and wiring lines.

In addition, on a side of the semiconductor substrate **11** opposite a light incidence side of thereof on which the light sensing section **12** is formed, a wiring layer **53** configured to include wiring lines **51**, which are provided over a plurality of layers, and an insulating layer **52** is formed, for example. Furthermore, the wiring layer **53** is supported by a support substrate **54**.

For example, since the hole accumulation layer **23** is formed of silicon (Si), a value of the work function is about **5.1** eV. Accordingly, the auxiliary hole accumulation layer **32** is preferably a layer having a value of a work function larger than 5.1.

For example, in the case of using a metallic layer, according to the chronological scientific tables, a value of a work function of an iridium (110) layer is 5.42, a value of a work function of an iridium (111) layer is 5.76, a value of a work function of a nickel layer is 5.15, a value of a work function of a palladium layer is 5.55, a value of a work function of an osmium layer is 5.93, a value of a work function of a golden (100) layer is 5.47, a value of a work function of a golden (110) layer is 5.37, and a value of a work function of a platinum layer is 5.64. These layers may be used as the auxiliary hole accumulation layer **32**. In addition to the above layers, a metallic layer with a value of a work function larger than that of the interface at a side of the light receiving surface **12***s* of the light sensing section **12** may also be used as the auxiliary hole accumulation layer **32**. In addition, although a work function value of ITO (In_2O_3) used as a transparent electrode is 4.8 eV, the work function of an oxide semiconductor may be controlled by a layer forming method or injection of impurities.

It is important that the auxiliary hole accumulation layer **32** be formed in a film thickness, which allows incident light to be transmitted therethrough, since the auxiliary hole accumulation layer **32** is formed on a light incidence side. Regarding the transmittance of the incident light, it is preferable that the auxiliary hole accumulation layer **32** have a transmittance as high as possible. For example, it is preferable to secure a transmittance of 95% or more.

In addition, for the auxiliary hole accumulation layer **32**, it is preferable to use a difference between the work function of the auxiliary hole accumulation layer **32** and a work function of a surface of the light sensing section **12**. Since there is no limitation in low resistance, it is not necessary to make the film thickness large even in a case when a conductive layer is used, for example. For example, assuming that the intensity of incident light is I_0 and the absorptivity is α (where $\alpha=(4\pi k)/\lambda$, k is Boltzmann's constant, and λ is a wavelength of incident light), the light intensity at a position of a depth z position is expressed as $I(z)=I_0 \exp(-\alpha \cdot z)$. Accordingly, calculating a thickness satisfying $I(z)/I_0=0.8$, the thickness of the iridium layer is 1.9 nm, the thickness of the gold layer is 4.8 nm, and the thickness of the platinum layer is 3.4 nm, for example. That is, it can be seen that the thickness is preferably 2 nm or less, even though the thickness changes with the film type.

In addition, the auxiliary hole accumulation layer **32** may be an organic layer. For example, polysthylenedioxytyiophene) may be used. As described above, the auxiliary hole accumulation layer **32** may be a conductive layer, an insulating layer, or a semiconductor layer as long as it has a work function value higher than that of the interface at a side of the light receiving surface **12***s* of the light sensing section **12**.

In the solid state imaging device **8**, the layer (auxiliary hole accumulation layer) **32** with a larger work function value than the interface **23** at a side of the light receiving surface **12***s* of the light sensing section **12** is provided on the insulating layer **31** formed on the light sensing section **12**. Accordingly, since the hole accumulation efficiency of the hole accumulation layer **23** is improved, the hole accumulation layer **23** formed on the light-receiving-side interface of the light sensing section **12** can accumulate sufficient holes therein. As a result, a dark current is reduced.

Next, an example of the configuration of the solid state imaging device using the auxiliary hole accumulation layer **32** will be described with reference to FIG. **37**. FIG. **37** shows a CMOS image sensor.

As shown in FIG. **37**, the light sensing section (for example, a photodiode) **12**, which converts incident light into an electric signal, and a plurality of pixel sections **61** having a transistor group **55** (partially shown in the drawing) including a transfer transistor, an amplifying transistor, and a reset transistor are formed in the semiconductor substrate **11**. For example, a silicon substrate is used as the semiconductor substrate **11**. In addition, a signal processing section (not shown) which processes a signal charge read from each light sensing section **12** is formed.

An element separating region **13** is formed in a part of the periphery of the pixel section **61**, for example, between the pixel sections **61** provided in a column direction or in a row direction.

In addition, the wiring layer **53** is formed on a surface side (below the semiconductor substrate **11** in the drawing) of the semiconductor substrate **11** formed with the light sensing section **12**. The wiring layer **53** is configured to include the wiring lines **51** and the insulating layer **52** which covers the wiring lines **51**. The support substrate **54** is formed on the wiring layer **53**. The support substrate **54** is formed of a silicon substrate, for example.

Furthermore, in the solid state imaging device **1**, the hole accumulation layer **23** is formed on a bottom surface side of the semiconductor substrate **11**, and the auxiliary hole accumulation layer **32** is formed on the hole accumulation layer **23** with the insulating layer **31** interposed therebetween. Furthermore, an organic color filter layer **44** is formed through the insulating layer (not shown). The organic color filter layer **44** is formed corresponding to the light sensing section **12** and is obtained by aligning a blue organic color filter, a red organic color filter, and a green organic color filter in a checker board pattern, for example. In addition, the condensing lens **45** for making incident light condensed onto each light sensing section **12** is formed on each organic color filter layer **44**.

Next, a method (third manufacturing method) of manufacturing a solid state imaging device according to an embodiment (first example) of the present invention will be described with reference to a flow chart shown in FIG. **38**, a cross-sectional view of a manufacturing process of FIG. **39**, and a cross-sectional view of a manufacturing process of FIG. **40** illustrating main parts. In FIGS. **38** to **40**, a manufacturing process of the solid state imaging device **8** is shown as an example.

As shown in (**1**) of FIG. **38** and (**1**) of FIG. **39**, an SOI substrate **81** obtained by forming a silicon layer **84** on a silicon substrate **82** with an insulating layer (for example, a silicon oxide layer) **83** interposed therebetween is first prepared, and a bottom surface mark **85** for alignment is formed in the silicon layer **84**.

Then, as shown in (**2**) of FIG. **38** and (**2**) of FIG. **39**, an element separating region (not shown), the hole accumulation layer **23**, the light sensing section **12**, the transistor group **55**, the wiring layer **53**, and the like are formed in the silicon layer **84** of the SOI substrate **81**. The hole accumulation layer **23** may be formed in a subsequent process after a process of making a substrate thin.

Then, as shown in (**3**) of FIG. **38** and (**3**) of FIG. **39**, the wiring layer **53** and the support substrate **54** are bonded together.

Then, as shown in (**4**) of FIG. **38** and (**4**) of FIG. **39**, a process of making the SOI substrate **81** thin is executed. Here, the silicon substrate **82** is removed by grinding and polishing, for example.

Although not shown, the hole accumulation layer **23** may also be formed by forming a cap layer (not shown) after removing the insulating layer **82** of the SOI substrate **81** and performing impurity injection and activation processing. As an example, a plasma-TEOS silicon oxide layer is formed in a thickness of 30 nm as the cap layer and the impurity injection is performed by ion implantation of boron. In this ion implantation condition, for example, the implantation energy is set to 20 keV and a dose of $1\times10^{13}/cm^2$ is set, for example. In addition, the activation is preferably performed by annealing in a temperature of 400° C. or less so that bonding of the wiring layer **53** and the support substrate **54** is not damaged. Then, the cap layer is removed by rare fluorinated acid processing, for example. At this time, the insulating layer **83** of the SOI substrate **81** may be removed.

Thus, as shown in (**1**) of FIG. **40**, the light-receiving-surface-side interface **23** of the light sensing section is formed on the light sensing section **12**.

Then, as shown in (**2**) of FIG. **40**, the insulating layer **31** is formed on the hole accumulation layer **23** (light incidence side). As an example, a plasma TEOS silicon oxide layer is formed in a thickness of 30 nm.

Then, as shown in (**3**) of FIG. **40**, a layer having a work function value larger than the interface (having a work function value of about 5.1 eV) at a side of the light receiving surface **12***s* of the light sensing section **12**, that is, the auxiliary hole accumulation layer **32** is formed on the insulating layer **31** (light incidence side). As an example, a platinum (Pt) layer having a work function of 5.6 eV, which is a thin metal layer, is formed in a thickness of 3 nm by sputtering. For other thin metal layers, iridium (Ir), rhenium (Re), nickel (Ni), palladium (Pd), cobalt (Co), ruthenium (Ru), rhodium (Rh), osmium (Os), gold (Au), and the like may be used. It is needless to say that alloy may be used.

Furthermore, ITO (In_2O_3) may also be used as a material of the auxiliary hole accumulation layer **32** since the work function of the light-receiving-surface-side interface of the light sensing section is about 5.1 eV in this example. The ITO may have a work function of 4.5 eV to 5.6 eV in the layer forming process. In addition, other oxide semiconductors, such as RuO_2, SnO_2, IrO_2, OsO_2, ZnO, ReO_2, and MoO_2, or a semiconductor obtained by injecting acceptor impurities, or polysthylenedioxytyiophene (PEDOT) which is an organic material may also be used as a material of the auxiliary hole accumulation layer **32** because they have work function values larger than 5.1 eV. In addition, examples of the layer forming technique performed in a temperature of 400° C. or less include the ALD method, the CVD method, and the vapor doping method.

Then, as shown in (**5**) of FIG. **38** and (**5**) of FIG. **39**, a bottom electrode **92** is formed through a barrier metal **91**.

Then, as shown in (**6**) of FIG. **38** and (**6**) of FIG. **39**, the color filter layer **44** is formed on the light sensing section **12** and then the condensing lens **45** is formed. Thus, the solid state imaging device **8** is formed.

In the method (third manufacturing method) of manufacturing a solid state imaging device, the layer having a larger work function value than the interface **23** at a side of the light receiving surface **12***s* of the light sensing section **12** is provided on the insulating layer **31** formed on the light sensing section **12**. Accordingly, since the hole accumulation efficiency of the hole accumulation layer **23** is improved, the hole accumulation layer **23** formed on the interface at a side of the light receiving surface **12***s* of the light sensing section **12** can accumulate sufficient holes therein. As a result, a dark current is reduced. In addition, the auxiliary hole accumulation layer **32** preferably has a work function value higher than a work function value of the hole accumulation layer **23** and may be a conductive layer, an insulating layer **21**, or an semiconductor layer since a current does not need to flow to the auxiliary hole accumulation layer **32**. For this reason, a material having high resistance may also be selected for the auxiliary hole accumulation layer **32**. In addition, the auxiliary hole accumulation layer **32** does not need an external signal input terminal.

Each of the solid state imaging devices **1** to **8** in the above examples includes a plurality of pixel sections each having a light sensing section, which converts incident light into an electric signal, and a wiring layer provided on a surface of the semiconductor substrate formed with the pixel sections, and may be applied as a back illuminated imaging device having a configuration in which light incident from a side opposite a surface on which the wiring layer is formed is received in each of the light sensing sections. It is needless to say that each of the solid state imaging devices **1** to **8** may also be applied as a top-emission-type solid state imaging device in which a wiring layer is formed on a light receiving surface side and incident light incident on the light sensing section is not blocked by setting an optical path of the incident light incident on the light sensing section as a region where the wiring layer is not formed.

Next, an imaging apparatus according to an embodiment (example) of the present invention will be described with reference to a block diagram of FIG. **41**. Examples of the imaging apparatus include a video camera, a digital still camera, and a camera of a mobile phone.

As shown in FIG. **41**, an imaging apparatus **500** includes a solid state imaging device (not shown) provided in an imaging section **501**. An imaging optical system **502** which images an image is provided at the condensing side of the imaging section **501**. To the imaging section **501**, a signal processing section **503** having a driving circuit for driving the imaging section **501**, a signal processing circuit which processes an image photoelectrically converted in the solid state imaging device into an image, and the like are connected. In addition, the image signal processed by the signal processing section may be stored in an image storage section (not shown). In the imaging apparatus **500**, the solid state imaging devices **1** to **8** described in the above embodiments may be used as the solid state imaging device.

In the imaging apparatus **500** according to the embodiment of the present invention, the solid state imaging device **1** or **2** according to the embodiment of the present invention or the solid state imaging device having a condensing lens and an anti-reflection layer configured as shown in FIG. **4** is used. Accordingly, a solid state imaging device capable of improving the color reproducibility or the resolution is used in the same manner as described above, which is advantageous in that a high-quality image can be recorded.

Furthermore, the imaging apparatus **500** according to the embodiment of the present invention is not limited to having the above-described configuration but may be applied to an imaging apparatus having any kind of configuration as long as it is an imaging apparatus using a solid state imaging device.

In addition, each of the solid state imaging devices **1** to **8** may be formed as a one chip type device or a module type device in which an imaging section and a signal processing section or an optical system are collectively packaged and which has an imaging function. In addition, the present invention may be applied to not only a solid-state imaging device

but also an imaging apparatus. In this case, an effect of improving image quality can be obtained in the imaging apparatus. Here, the imaging apparatus refers to a camera or a portable apparatus having an imaging function, for example. In addition, the 'imaging' includes not only imaging of an image at the time of normal photographing of a camera but also detection of a fingerprint and the like in a broad sense of meaning.

It should be understood by those skilled in the art that various modifications, combinations, sub-combinations and alterations may occur depending on design requirements and other factors insofar as they are within the scope of the appended claims or the equivalents thereof.

What is claimed is:

1. An imaging apparatus comprising:

a condensing optical section that condenses incident light;

a solid state imaging device that receives the incident light condensed in the condensing optical section and performs photoelectric conversion of the received light; and

a signal processing section that processes signal charges photoelectrically converted, wherein,

the solid state imaging device includes

(a) a light sensing section that performs the photoelectric conversion of incident light,

(b) a first layer and a second layer formed over the light sensing section and each formed of a material selected from the group consisting of hafnium oxide (HfO_2), aluminum oxide (Al_2O_3), zirconium oxide (ZrO_2), tantalum oxide (Ta_2O_5), titanium oxide (TiO_2), lanthanum oxide (La_2O_3), praseodymium oxide (Pr_2O_3), cerium oxide (CeO_2), neodymium oxide (Nd_2O_3), promethium oxide (Pm_2O_3), samarium oxide (Sm_2O_3), europium oxide (Eu_2O_3), gadolinium oxide (Gd_2O_3), terbium oxide (Tb_2O_3), dysprosium oxide (Dy_2O_3), holmium oxide (Ho_2O_3), erbium oxide (Er_2O_3), thulium oxide (Tm_2O_3), ytterbium oxide (Yb_2O_3), lutetium oxide (Lu_2O_3), yttrium oxide (Y_2O_3), hafnium nitride, aluminum nitride, hafnium oxide nitride, and aluminum oxide nitride; and

(c) a hole accumulation layer between the first layer and the light receiving surface of the light sensing section.

2. The solid state imaging device according to claim **1**, further comprising:

a light-shielding layer over the second layer, wherein the light-shielding layer is not provided over said light-sensing section.

3. The solid state imaging device according to claim **2**, wherein an insulating layer is on the light shielding layer, the insulating layer having a different thickness over the light shielding layer than over the light sensing section.

4. The solid state imaging device according to claim **1**, wherein said first and second layers are formed of a thickness that is effective to provide an anti-reflection effect.

5. A solid state imaging device having a light sensing section that performs photoelectric conversion of incident light, comprising:

a first layer and a second layer formed over the light sensing section and each formed of a material selected from the group consisting of hafnium oxide (HfO_2), aluminum oxide (Al_2O_3), zirconium oxide (ZrO_2) , tantalum oxide (Ta_2O_5), titanium oxide (TiO_2), lanthanum oxide (La_2O_3), praseodymium oxide (Pr_2O_3), cerium oxide (CeO_2), neodymium oxide (Nd_2O_3), promethium oxide (Pm_2O_3), samarium oxide (Sm_2O_3), europium oxide (Eu_2O_3), gadolinium oxide (Gd_2O_3), terbium oxide (Tb_2O_3), dysprosium oxide (Dy_2O_3), holmium oxide (Ho_2O_3), erbium oxide (Er_2O_3), thulium oxide (Tm_2O_3), ytterbium oxide (Yb_2O_3), lutetium oxide (Lu_2O_3), yttrium oxide (Y_2O_3), hafnium nitride, aluminum nitride, hafnium oxide nitride, and aluminum oxide nitride; and

a hole accumulation layer formed between the light sensing section and the first layer.

6. The solid state imaging device according to claim **5**, further comprising:

a third layer between the first layer and the light sensing section.

7. The solid state imaging device according to claim **5**, further comprising:

a semiconductor substrate;

a plurality of pixel sections on the substrate, each pixel section having a light sensing section which converts incident light into an electric signal; and

a wiring layer on a surface of the semiconductor substrate s,

wherein,

the solid state imaging device is a back illuminated imaging device that receives light, which is incident from a side opposite a surface on which the wiring layer is formed, in the light sensing section.

8. The solid state imaging device according to claim **6**, wherein the third layer is a silicon oxide layer.

9. The solid state imaging device according to claim **5**, further comprising:

a fourth layer over the second layer.

10. The solid state imaging device according to claim **5**, wherein the fourth layer is a silicon oxide layer.

11. The solid state imaging device according to claim **5**, wherein the first layer and the second layer are formed by different methods.

12. The solid state imaging device according to claim **5**, the total thickness of the first layer and the second layer is between 50 nm and 60 nm.

13. The solid state imaging device according to claim **5**, wherein the first layer and the second layer are formed of different materials.

14. The solid state imaging device according to claim **5**, wherein at least one of the first layer and the second layer is made of hafnium oxide.

15. The solid state imaging device according to claim **5**, further comprising a peripheral circuit section, wherein the first layer and the second layer are provided over the peripheral circuit section.

16. The solid state imaging device according to claim **5**, wherein the first layer is formed by atomic layer deposition.

17. The solid state imaging device according to claim **6**, wherein the first layer is formed by atomic layer deposition and the third layer is formed simultaneously with the first layer.

18. The solid state imaging device according to claim **5**, wherein the hole accumulation layer is formed without ion implantation over at least the center of light sensing section.

* * * * *