IN THE UNITED STATES DISTRICT COURT
FOR THE SOUTHERN DISTRICT OF IOWA
CENTRAL DIVISION

VERMEER MANUFACTURING COMPANY,	)	
Plaintiff,	)	Case No. 4:19-cv-00050-CRW-HCA
vs.	)	
THE TORO COMPANY,	)	
Defendant.		

VERMEER MANUFACTURING COMPANY'S
OPENING CLAIM CONSTRUCTION BRIEF

TABLE OF CONTENTS

I. INTRODUCTION 1

II. TECHNOLOGY OVERVIEW 2

III. LEGAL STANDARDS 4

IV. ARGUMENT 6

A. A Loader Apparatus "For Standing *or* Walk-Behind Operator Control" 7

B. The Court Should Reject Toro's Attempt to Graft Additional Limitations onto the Plain and Ordinary Meaning of the Claims. 10

1. The plain and ordinary meaning of "mainframe" is not limited to a "single weldment." 10

2. The plain and ordinary meaning of "loader support" and "rigid frame" is not limited to a "single weldment." 13

3. The plain and ordinary meaning of "pivotally attached" does not require a direct attachment with no intervening structure. 15

4. The plain and ordinary meaning of "front linkage" and "rear linkage" does not require any particular orientation. 19

5. The plain and ordinary meaning of "pivot point" does not require construction. 20

C. "Barrier Guard" Is Not Indefinite. 21

D. The Court Should Construe the Term "Disposed Below the Operator Controls" Consistently with the Intrinsic Evidence. 22

E. The Court Should Construe the Term "Disposed Between the Operator Controls and the Bottom of the Rigid Frame and/or Disposed Forward of the Control Station" Consistently with the Intrinsic Evidence. 24

V. CONCLUSION 26

TABLE OF AUTHORITIES

Cases

ACTV, Inc. v. Walt Disney Co.,
346 F.3d 1082 (Fed. Cir. 2003) 5

Acumed LLC v. Stryker Corp.,
483 F.3d 800 (Fed. Cir. 2007) 18

Amgen Inc. v. Hoechst Marion Roussel, Inc.,
314 F.3d 1313 (Fed. Cir. 2003) 12, 14

Bicon, Inc. v. Straumann Co.,
441 F.3d 945 (Fed. Cir. 2006) 5

Comark Commc'ns, Inc. v. Harris Corp.,
156 F.3d 1182 (Fed. Cir. 1998) 5

Deere & Co. v. Bush Hog, LLC,
703 F.3d 1349 (Fed. Cir. 2012) 6, 10

Digital-Vending Servs. Int'l, LLC v. Univ. of Phoenix, Inc.,
672 F.3d 1270 (Fed. Cir. 2012) 5

E.I. du Pont De Nemours & Co. v. Unifrax I LLC,
921 F.3d 1060 (Fed. Cir. 2019) 9

Intellectual Ventures I LLC v. T-Mobile USA, Inc.,
902 F.3d 1372 (Fed. Cir. 2018) 17

Kustom Signals, Inc. v. Applied Concepts, Inc.,
264 F.3d 1326 (Fed. Cir. 2001) 7, 8

Laitram Corp. v. NEC Corp.,
163 F.3d 1342 (Fed. Cir. 1998) 6

Lexion Med., LLC v. Northgate Techs., Inc.,
641 F.3d 1352 (Fed. Cir. 2011) 5

Liebel-Flarsheim Co. v. Medrad, Inc.,
358 F.3d 898 (Fed. Cir. 2004) 5, 6, 11, 14

Markman v. Westview Instruments, Inc.,
517 U.S. 370 (1996)..... 5

Nautilus, Inc. v. Biosig Instruments,
572 U.S. 898 (2014)..... 22

Phillips v. AWH Corp.,
415 F.3d 1303 (Fed. Cir. 2005) ..... passim

Rambus Inc. v. Infineon Tech. AG,
318 F.3d 1081 (Fed. Cir. 2003) 26

SunRace Roots Enter. Co. v. SRAM Corp.,
336 F.3d 1298 (Fed. Cir. 2003) 11, 12, 14

Superguide Corp. v. DirecTV Enters., Inc.,
358 F.3d 870 (Fed. Cir. 2004) 6

Unwired Planet, LLC v. Apple Inc.,
829 F.3d 1353 (Fed. Cir. 2016) 17

Ventana Med. Sys., Inc. v. Biogenex Labs., Inc.,
473 F.3d 1173 (Fed. Cir. 2006) 13

Vitronics Corp. v. Conceptronic, Inc.,
90 F.3d 1576 (Fed. Cir. 1996) 5

Wenger Mfg., Inc. v. Coating Mach. Sys., Inc.,
239 F.3d 1225 (Fed. Cir. 2001) 11

Wilson Sporting Goods Co. v. Hillerich & Bradsby Co.,
442 F.3d 1322 (Fed. Cir. 2006) 18

Wright Medical Technology, Inc. v. Osteonics Corp.,
122 F.3d 1440 (Fed. Cir. 1997) 25

Statutes

35 U.S.C. § 112(b) 22

35 U.S.C. § 112(d) 11, 25

I. INTRODUCTION

Vermeer filed this lawsuit to stop Toro from infringing U.S. Patent No. 10,202,266.[1] Toro's Dingo TX 1000 compact tool carrier infringes at least claims 1, 4–9, 14, 17–23, 25, and 27 of the '266 patent.[2]

The parties disagree as to the proper construction of the Asserted Claims. The disputed terms and the parties' proposed constructions for these terms are identified in the Joint Claim Construction Statement (ECF No. 49).

Vermeer's proposed constructions best capture the meaning of the disputed claim terms in light of the intrinsic evidence. The claim language is straightforward and will be easily understood by the jury. Therefore, Vermeer has proposed either a simple construction for the disputed terms—which captures the term's ordinary meaning in the industry—or suggested that the Court need not provide any express construction for the straightforward claim language.

Toro took a different approach to claim construction. Grasping for any possible basis to distinguish its accused compact tool carrier from the asserted claims, Toro asks the Court to interpret the straightforward claim language in a way that defies the Federal Circuit's claim construction rules and the established meanings of the ordinary English words. Toro's approach, though flawed, is common among accused infringers: throw as many narrow constructions of the claim language at the Court as possible, with the hope that one will stick and provide a basis to argue non-infringement. Toro's strained proposed constructions are inconsistent with the express claim language of the '266 patent and the other intrinsic evidence and should be rejected.

---

[1] U.S. Patent No. 10,202,266 ("the '266 patent") is attached as Ex. 1.

[2] Toro's Dingo TX 1000 is referred to herein as the "Accused Product" and the claims that this product infringes are referred to as the "Asserted Claims."

Vermeer respectfully requests that the Court adopt Vermeer's proposed constructions.

II. TECHNOLOGY OVERVIEW

A team of Vermeer engineers invented vertical-lift loader-arm configurations for compact tool carriers. This was the first time that a vertical-lift compact tool carrier had been achieved. This case involves a U.S. patent describing Vermeer's breakthrough invention.

A compact tool carrier is a specialized form of small, yet powerful, construction equipment that allows users to work in tight spaces. The industry generally defines compact tool carriers as "a self-propelled crawler or wheeled machine having an operating mass of less than 1500 kg with a rigid frame, having either a pedestrian operating position or standing operator platform at the rear of the machine and having either front-mounted interchangeable equipment or lift arms with an attachment bracket capable of coupling to interchangeable, front-mounted attachments." Ex. 1 at 1:26–33[3] (citing SAE Standard J2752).

Compact tool carriers are also referred to as mini skid-steers, or compact utility loaders. These specialized machines are significantly smaller than standard skid steers, as seen below:

The full-size skid steer shown here is a Mustang 2700V and the much smaller compact tool

[3] Citations to patents in the form X:Y–Z refer to the column (X) and the line numbers (Y–Z) of the patent.

carrier in the foreground is a Vermeer S450TX.[4]

The challenge facing engineers designing compact tool carriers was to pack as much power as possible into the small dimensions required for compact tool carriers. In the compact tool carrier market, lift capacity differentiates products and drives sales. Manufacturers devote significant resources to incrementally improve their machines to eke out every last pound of lift capacity possible. The concomitant engineering challenges also increase each year due to the small form factor and overall weight restrictions inherent to these types of machines.

Vermeer released its first compact tool carrier in June of 2003. Like every other compact tool carrier at the time, this machine relied on a radial loader arm directly attached to the machine to lift tools and materials. Since 2003, Vermeer has developed and released a number of other compact tool carriers. Each new machine increased the amount of lift capacity that could be wrung out of a machine of its size. During this period, Vermeer's machines continued to rely on a traditional loader arm that followed a radial or curved lift path. Competitive machines from Toro, Bobcat, and other manufacturers released during this period mirrored Vermeer's offerings—they steadily increased lift capacity, but continued to rely on traditional radial lift loader arms.

The drive to continuously increase the lift capacity of compact tool carriers year after year presented numerous and significant engineering challenges. Customers place particular emphasis on the small size and resulting maneuverability of these machines. As a result, it is not acceptable to gain additional lift capacity by simply making the machines larger. Nor can lift capacity be gained by making the machine heavier. Compact tool carriers must remain

---

[4] The Vermeer S450TX is a compact tool carrier that predated Vermeer's patented vertical lift compact tool carriers at issue in this case.

lightweight to allow for use on grass and other surfaces damaged by heavier equipment. Given these significant size and weight constraints, finding new ways to increase the lift capacity of these already well-engineered machines presented a daunting challenge.

Vermeer tasked its engineers with developing new ways to increase the capacity of its compact tool carriers. After significant research and development, Vermeer finalized its design for a vertical lift mechanism that would increase lift capacity by keeping the material being lifted as close to the machine as possible during the full travel of the loader arm. This improvement is depicted in figures below, comparing the vertical travel path of Vermeer's invention to the radial or arcuate lift path of a traditional compact tool carrier.

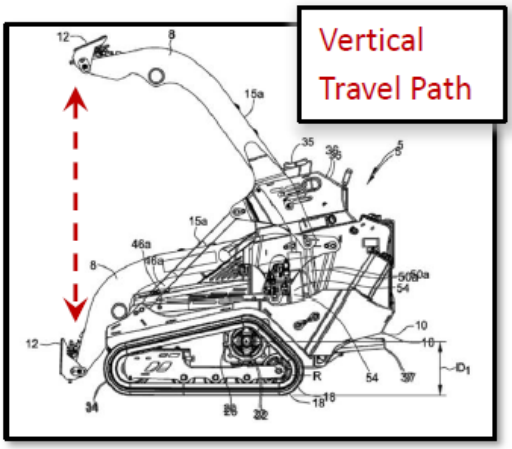

Vermeer filed a patent application for its invention on February 20, 2015. The Patent Office has granted three patents so far relating to Vermeer's invention. The '266 patent issued on February 12, 2019.

III. LEGAL STANDARDS

"It is a bedrock principle of patent law that the claims of a patent define the invention to which the patentee is entitled the right to exclude." *Phillips v. AWH Corp.,* 415 F.3d 1303, 1312 (Fed. Cir. 2005) (en banc) (internal quotations omitted). Claim construction—the process of

construing and determining the scope of a patent's claims—is an issue of law for the Court to determine. *Markman v. Westview Instruments, Inc.,* 517 U.S. 370, 384–91 (1996).

Claim terms are generally given their ordinary and customary meaning as understood by one of ordinary skill in the art at the time of the invention. *Phillips,* 415 F.3d at 1312–13. "The customary meaning of a claim term is not determined in a vacuum and should be harmonized, to the extent possible, with the intrinsic record, as understood within the technological field of the invention." *Lexion Med., LLC v. Northgate Techs., Inc.,* 641 F.3d 1352, 1356 (Fed. Cir. 2011) (citing *Phillips,* 415 F.3d at 1314). The intrinsic record includes the patent (its claims and specification), as well as the prosecution history. *Phillips,* 415 F.3d at 1313.

"The appropriate starting point . . . is always with the language of the asserted claim itself." *Comark Commc'ns, Inc. v. Harris Corp.,* 156 F.3d 1182, 1186 (Fed. Cir. 1998). "[T]he context of the surrounding words of the claim also must be considered in determining the ordinary and customary meaning of those terms." *Phillips,* 415 F.3d at 1314 (quoting *ACTV, Inc. v. Walt Disney Co.,* 346 F.3d 1082, 1088 (Fed. Cir. 2003)). Other claims in the patent are also used to interpret the meaning of a claim term. *Id.* (citing *Vitronics Corp. v. Conceptronic, Inc.,* 90 F.3d 1576, 1582 (Fed. Cir. 1996)). For instance, "the presence of a dependent claim that adds a particular limitation gives rise to a presumption that the limitation in question is not present in the independent claim." *Id.* at 1315 (citing *Liebel-Flarsheim Co. v. Medrad, Inc.,* 358 F.3d 898, 910 (Fed. Cir. 2004)). There is a "well-established rule that 'claims are interpreted with an eye toward giving effect to all terms in the claim.'" *Digital-Vending Servs. Int'l, LLC v. Univ. of Phoenix, Inc.,* 672 F.3d 1270, 1275 (Fed. Cir. 2012) (quoting *Bicon, Inc. v. Straumann Co.,* 441 F.3d 945, 950 (Fed. Cir. 2006)).

Along with the language of the claim, the patent specification is relevant in determining

the proper claim construction. The specification "is the single best guide to the meaning of a disputed term." *Phillips,* 415 F.3d at 1315. "While claim terms are understood in light of the specification, a claim construction must not import limitations from the specification into the claims." *Deere & Co. v. Bush Hog, LLC,* 703 F.3d 1349, 1354 (Fed. Cir. 2012). This is because "it is the claims, not the written description, which define the scope of the patent rights." *Laitram Corp. v. NEC Corp.,* 163 F.3d 1342, 1347 (Fed. Cir. 1998). "[A] particular embodiment appearing in the written description may not be read into a claim when the claim language is broader than the embodiment." *Superguide Corp. v. DirecTV Enters., Inc.,* 358 F.3d 870, 875 (Fed. Cir. 2004); *see also Liebel-Flarsheim Co.,* 358 F.3d at 913.

The prosecution history of the patent should also be considered during claim construction. *Phillips,* 415 F.3d at 1317. "Like the specification, the prosecution history provides evidence of how the PTO and the inventor understood the patent." *Id.* This record of the back and forth between the applicant and the Patent Office is considered part of the intrinsic evidence used to construe patent claims. *Id.*

Courts may also look to extrinsic evidence, such as expert testimony, technical dictionaries, and technical papers, when construing claim terms. *Id.* at 1317. But the Federal Circuit has noted that it "view[s] extrinsic evidence in general as less reliable than the patent and its prosecution history in determining how to read claim terms." *Id.* at 1318.

IV. ARGUMENT

Vermeer's proposed constructions are grounded in the language of the claims themselves, reflecting the disclosure of the patent specification and prosecution history. Toro's proposed constructions, by contrast, narrow the claims contrary to the plain and ordinary meaning of the terms and the context provided by the specification, prosecution history, and other claims in the

patent. The strained constructions Toro proposes will not assist the jury by elucidating the meaning of the claim terms. Assisting the jury does not appear to be Toro's goal. Instead, Toro asks the Court to significantly and improperly rewrite the claims to provide Toro with an illegitimate basis to distinguish its Accused Product.

As explained below, Toro's proposed constructions lack support in the intrinsic evidence and violate the Federal Circuit's claim construction rules. Vermeer respectfully requests that the Court reject Toro's proposed construction and adopt Vermeer's.

A. A Loader Apparatus "For Standing *or* Walk-Behind Operator Control"

Claim Term/Phrase	Vermeer's Proposed Construction	Toro's Proposed Construction
"for standing or walk-behind operator control"	Plain and ordinary meaning The claim term "or" identifies alternatives. The apparatus can be used for standing operator control or walk-behind operator control, but need not be configured for, or capable of, both modes of operation.	capable of both standing or walk-behind operator control; walk-behind operator control requiring a control station positioned rearwardly enough to allow for safe walk-behind operation

The principal dispute regarding this limitation is straightforward: Does "or" mean "or," or does it mean "and"? Hoping for a non-infringement defense, Toro seeks a narrow construction that would require that the compact tool carrier be configured in a way that allows both standing (i.e., ride-on) operation *and* walk-behind operation. But that's not what the claim says. Toro's proposed constructions contradict the plain claim language, find no support in the intrinsic evidence, and should be rejected.

It is self-evident that the claim term "or" sets forth alternatives. *Kustom Signals, Inc. v. Applied Concepts, Inc.,* 264 F.3d 1326, 1331 (Fed. Cir. 2001) (affirming the district court's claim construction of "or," consistent with "its ordinary meaning as stating alternatives."); Ex. 4

(Oxford Dictionary) ("conj**.** 1. used to link alternatives"). In the claims at issue, the use of "or" identifies two alternative configurations for the tool carrier: standing (*i.e.,* ride-on) or walk-behind operation. This is seen in claim 7 of the '266 patent, for example:

> **7**. A loader apparatus for standing or walk-behind operator control and comprising:
>
> a control station having operator controls toward a rear of the loader apparatus;
>
> a loader adapted to carry a tool, the loader being moveable between a down position and a vertically raised position;
>
> a rigid frame for supporting the control station and the loader, the rigid frame having a first side, a second side, a top, and a bottom;
>
> a first linkage pivotally attached to the first side of the rigid frame at a first pivot point and pivotally attached to the loader at a second pivot point;
>
> an actuator pivotally attached to the first side of the rigid frame at a third pivot point and pivotally attached to the loader at a fourth pivot point; and
>
> a second linkage pivotally attached to the first side of the rigid frame at a fifth pivot point and pivotally attached to the loader at a sixth pivot point, wherein, as the loader travels from the down position to the vertically raised position, the first, second, third, fourth, fifth and sixth pivot points are (1) disposed between the operator controls and the bottom of the rigid frame and/or (2) disposed forward of the control station.

Ex. 1 at 7:21–44; *see also id. at* claims 14, 19, 25.

The plain and ordinary meaning of the disjunctive conjunction "or" simply requires that the compact tool carrier be configured in a way that permits *either* standing *or* walk-behind operation—it does not require *both,* as Toro contends. The plain claim language controls here and forecloses Toro's proposed construction. *Kustom Signals,* 264 F.3d at 1331 (construing "or" as "designating alternatives" and finding "no basis whatsoever for believing that [patentee] intended its usage of 'or' somehow to embrace 'and.'").

The specification confirms that the '266 patent uses the word "or" in this context to identify alternatives: "Compact tool carriers are walk-behind units or include a platform on

which the operator may stand during use." Ex. 1 at 1:23–25, 1:25–30 ("Compact tool carriers are generally defined . . . as 'a self-propelled crawler or wheeled machine having an operating mass of less than 1500 kg with a rigid frame, *having either a pedestrian operating position or a standing operator platform* at the rear of the machine . . .") (emphasis added) (quoting the ISO 6165 and SAEJ2752 standards), 1:55–57 ("One aspect of the present disclosure is directed to a compact tool carrier configured for standing or walk-behind operator control), and 3:32–45 (describing the differences between the two configurations and noting that Figure 2 included an operator platform for standing operation). In fact, the specification sets forth different placements for the control station depending on whether the machine was configured for walk-behind or standing operation. *Id.* at 3:46–61.

The prosecution histories of the '386 patent and '750 patent[5] also demonstrate that the claim term "or" should be given its plain and ordinary meaning. This evidence demonstrates two different configurations for compact tool carriers: walk-behind or standing/ride-on (which includes a platform to support the operator). *See, e.g.,* Ex. 2 at VMR000252 ("Various small self-propelled loaders have been advanced, where an operator will either stand or walk on the ground behind the loader or stand on a platform on the loader frame to manipulate the work element. . ."); Ex. 3 at VMR000985 ("manufacturers [of compact tool carriers] have shifted from 'walk-behind' machines to predominantly 'ride-on' machines").

The plain meaning of the claim language "or" forecloses Toro's proposed constructions

---

[5] The '266 patent is a continuation of the application that issued as U.S. Patent No. 9,975,750 ("the '750 patent"), which is a continuation of the application that issued as U.S. Patent No. 9,321,386 ("the '386 patent"). The prosecution history of these earlier applications in the same patent family is relevant intrinsic evidence to be considered during claim construction. *See E.I. du Pont De Nemours & Co. v. Unifrax I LLC*, 921 F.3d 1060, 1070 (Fed. Cir. 2019) ("When a parent application includes statements involving 'common subject matter' with the terms at issue, those statements are relevant to construction of the terms in the child patent.").

requiring a machine to simultaneously allow for *both* standing *and* walk-behind operation. All of the intrinsic evidence supports the conclusion that the plain and ordinary meaning controls here. Vermeer respectfully requests the Court to reject Toro's proposed construction and provide the following clarifying instruction to the jury: "The claim term 'or' identifies alternatives. The loader apparatus must either be configured for standing operator control or walk-behind operator control, but need not be configured for both modes of operation."

B. The Court Should Reject Toro's Attempt to Graft Additional Limitations onto the Plain and Ordinary Meaning of the Claims.

Toro asks the Court to import limitations from the specification for a number of the disputed claim terms. In each case, Toro's construction is taken directly from the preferred embodiment described in the specification. Importing limitations from the specification or limiting the scope of the claim to a single embodiment is improper. *Deere & Co.,* 703 F.3d at 1354 ("[A] claim construction must not import limitations from the specification into the claims."); *Phillips,* 415 F.3d at 1323 ("although the specification often describes very specific embodiments of the invention, we have repeatedly warned against confining the claims to those embodiments.").

1. The plain and ordinary meaning of "mainframe" is not limited to a "single weldment."

Claim Term/Phrase	Vermeer's Proposed Construction	Toro's Proposed Construction
"mainframe"	Plain and ordinary meaning ("body of the loader apparatus supporting the loader")	a single weldment which supports the loader

"Mainframe" is used in the '266 patent to describe the body of the compact tool carrier that supports the loader. This is how the specification uses the term "mainframe." Ex. 1 at 4:6–7 (using "body" and "mainframe" interchangeably). This is consistent with the plain meaning of

the words "main" and "frame." "Frame" simply means a rigid supporting structure. Ex. 4 (defining the noun "frame" as "the rigid supporting structure of a vehicle, aircraft, or other object"). And the addition of "main" to "frame" simply indicates that this frame is the primary—or most important—frame of the vehicle. *Id.* (defining the adjective "main" as "chief in size or importance").

Toro seeks a narrow definition of "mainframe" that would limit the term to "a single weldment to which the loader is attached." With this narrow definition, Toro hopes to avoid infringement because the body supporting the loader in its Accused Product has certain portions that are bolted—rather than welded—together. The intrinsic evidence forecloses Toro's litigation-inspired construction.

The patent claims themselves demonstrate that "mainframe" is not limited to a single weldment. This is because a single-weldment mainframe is expressly claimed in a dependent claim. A "dependent claim" is a claim that references an earlier claim—incorporating all the limitations of the referenced claim—and then adds additional limitations. 35 U.S.C. § 112(d). The Federal Circuit instructs that "the presence of a dependent claim that adds a particular limitation raises a presumption that the limitation in question is not found in the independent claim." *Liebel-Flarsheim Co.,* 358 F.3d at 910. "That presumption is especially strong when the limitation in dispute is the only meaningful difference between an independent and dependent claim, and one party is urging that the limitation in the dependent claim should be read into the independent claim." *SunRace Roots Enter. Co. v. SRAM Corp.,* 336 F.3d 1298, 1303 (Fed. Cir. 2003); *see also Wenger Mfg., Inc. v. Coating Mach. Sys., Inc.,* 239 F.3d 1225, 1234 (Fed. Cir. 2001).

In the '266 patent, a number of dependent claims add "single weldment" as the only

added limitation to the "mainframe" identified in the independent claim. This is seen, for example, in claim 24 of the '266 patent. Claim 24 is a dependent claim that depends from claim 19. Claim 19 requires a loader, mainframe, linkages, actuator, and a control station, as described in that claim. Claim 24 depends from claim 19 and adds an additional requirement that the mainframe be a single weldment. Ex. 1 at 10:1–2 ("24. The loader apparatus as set forth in claim 19 wherein the mainframe incorporates a single weldment."). This demonstrates that the mainframe in independent claim 19 is not limited to the single-weldment construction. Moreover, the single-weldment limitation that Toro seeks to add to the independent claim "is the only meaningful difference between [the] independent and dependent claim." *SunRace,* 336 F.3d at 1298. Thus, there is an "especially strong" presumption that the independent claim is *not* limited to a single weldment. *Id.; see also, e.g., Amgen Inc. v. Hoechst Marion Roussel, Inc.,* 314 F.3d 1313, 1326 (Fed. Cir. 2003) ("Our court has made clear that when a patent claim does not contain a certain limitation and another claim does, that limitation cannot be read into the former claim in determining either validity or infringement.") (internal quotation omitted).

The fact that "mainframe" does not require a single weldment is also clear from the prosecution history. During prosecution of the grandparent application (leading to the '386 patent), the examiner had to rely on a *different* rationale when addressing the dependent claims that required a "single weldment." Ex. 2 at VMR000238 ("Regarding claims 3 and 9, it would have been a matter of obvious engineering design choice to form the mainframe or loader as a one-piece construction."), VMR000219–220 (dependent claims 3 and 9 that were being examined); Ex. 3 at VMR000897 ("Regarding claims 22, 29, and 41, it would have been a matter of obvious engineering design choice to form the mainframe, linkage, or loader arms as a one-piece construction."), VMR000640, VMR000644 (dependent claims 22 and 41 that were being

examined). This rationale was not necessary when the examiner addressed the independent claims that merely required a "mainframe," without a "single weldment" limitation. Ex. 2 at VMR000237–39, VMR000218–23; Ex. 3 at VMR000895–98, VMR000639–45. This demonstrates that the examiner understood "mainframe" to encompass embodiments not made from a single weldment, further supporting Vermeer's proposed construction. *See Ventana Med. Sys., Inc. v. Biogenex Labs., Inc.,* 473 F.3d 1173, 1182–83 (Fed. Cir. 2006) (finding district court erred in adopting limited construction of a term where examiner's statement did not limit a particular term but rather "support[ed] a broad construction"). Vermeer's proposed construction is consistent with the intrinsic evidence and the express claim language used in the '266 patent. Toro's proposed construction improperly imports a limitation from one embodiment described in the specification and would violate the doctrine of claim differentiation.

2. The plain and ordinary meaning of "loader support" and "rigid frame" is not limited to a "single weldment."

Claim Term/Phrase	Vermeer's Proposed Construction	Toro's Proposed Construction
"loader support"	Plain and ordinary meaning	a body which supports the loader *by means of a mainframe to which the loader is pivotally attached via linkages*
"rigid frame"	Plain and ordinary meaning	a body which supports the loader *by means of a mainframe to which the loader is attached via linkages*

"Loader support" and "rigid frame" are easy to understand and require no definition. In some instances, the ordinary meaning of a claim term is "readily apparent," thereby requiring "little more than the application of the widely accepted meaning of commonly understood words." *Phillips*, 415 F.3d at 1314. This is such an instance, as these terms use the commonly understood

words "loader," "support," "rigid," and "frame."

The first part of Toro's proposed construction for these terms is consistent with this plain meaning: "a body which supports the loader." But the second part of Toro's proposed construction (italicized above) seeks to import numerous limitations not supported by the intrinsic record. First, by incorporating "mainframe" into its proposed constructions, Toro asks the Court to import the single-weldment limitation. As explained above, the intrinsic evidence forecloses Toro's litigation-inspired construction.

The patent claims themselves demonstrate that "loader support" and "rigid frame" are not limited to a single weldment. This is because a single-weldment loader support is expressly claimed in a dependent claim. *See, e.g.*, Claims 3 and 13 (Ex. 1 at 7:9–10, 66–67). As explained above, when dependent claims add certain limitations that are not found in the independent claim, there is a presumption that the limitation is not present in the independent claim. *See Liebel-Flarsheim Co.,* 358 F.3d at 910. This presumption is "especially strong" in situations like this, where "the limitation in dispute is the only meaningful difference between an independent and dependent claim, and one party is urging that the limitation in the dependent claim should be read into the independent claim." *SunRace Roots Enter. Co. v. SRAM Corp.,* 336 F.3d at 1303; *see also, e.g., Amgen Inc. v. Hoechst Marion Roussel, Inc.,* 314 F.3d 1313, 1326 (Fed. Cir. 2003) ("Our court has made clear that when a patent claim does not contain a certain limitation and another claim does, that limitation cannot be read into the former claim in determining either validity or infringement.") (internal quotation omitted).[6]

---

[6] The prosecution history further forecloses Toro's proposed construction. For example, when considering the patentability of claims that expressly required that the loader support incorporate a "single weldment," the examiner had to rely on a different rationale. *See, e.g.*, Ex. 5 at VMR013610 ("Regarding claim 33, it would have been an obvious choice of mechanical design

Second, Toro's proposed constructions also import limitations into the terms "loader support" and "rigid frame" relating to how the support or frame is attached to the loader: "to which the loader is pivotally attached via linkages." Toro has no basis to pack all of these limitations into the meaning of "loader support" or "rigid frame." This is especially so in light of the fact that other express claim limitations address how the loader is attached to the support or frame. The second portion of Toro's proposed constructions (italicized above) should be rejected.

3. The plain and ordinary meaning of "pivotally attached" does not require a direct attachment with no intervening structure.

Claim Term/Phrase	Vermeer's Proposed Construction	Toro's Proposed Construction
"pivotally attached"	Plain and ordinary meaning	attached by a pivot with no other intervening structure

The term "pivotally attached"[7] does not require any construction, because a juror can readily understand the ordinary and customary meaning of these phrases. *Phillips,* 415 F.3d at 1314. Toro's proposed constructions should be rejected. Toro does not attempt to shed light on the meaning of the straightforward language "pivotally attached." Indeed, Toro's proposed construction simply rearranges the words and changes the adverb "pivotally" to the noun "pivot." Toro instead seeks to graft an additional limitation onto this plain claim language: Toro asks the Court to limit "pivotally attached" to require a direct connection "with no other intervening

---

to construct the upper (5) and lower (2) frame as a single weldment to facilitate the manufacturing thereof."), VMR013672 ("In regard to claim 17, it would have been a matter of obvious engineering design choice to form the loader support as a one-piece construction."), VMR013965 (claim 17 being examined), VMR013971 (claim 33 being examined).

[7] Although Toro initially proposed a similar construction for "pivotally connected" (Dkt. No. 49 at 3), Toro now admits that this term should be given its plain and ordinary meaning and has withdrawn its proposed construction.

structure." The intrinsic record does not support Toro's proposed construction.

The general term "attached" encompass both direct and indirect attachments, and nothing in the claim language supports requiring a *direct* attachment. To the contrary, the claims demonstrate that, when Vermeer wanted to require either a direct or indirect attachment, it used specific language to do so. For example, when direct attachment was excluded from the claim scope, express language was used. *See, e.g.,* Ex. 1 at 6:53–54 (claim 1) ("the loader *being free from direct attachment* to the loader support") (emphasis added); *see also* 8:5–6 (claim 14) (same); 9:26–27 (claim 23) ("wherein the loader is *free from direct attachment* to the mainframe.") (emphasis added); 10:24–25 (claim 27) (same). And when an indirect attachment was intended to be excluded, Vermeer expressly required that the components be "directly pivotally attached." This is seen, for example, in the parent '750 patent. Ex. 6 at 6:51 (claim 1) ("an actuator *directly pivotally attached* to the first side of the mainframe at a fifth pivot point and *directly pivotally attached* to the loader arm at a sixth pivot point . . .") (emphasis added). By contrast, the generic language at issue, "pivotally attached," covers both direct and indirect attachments. All three variations of the attachment limitation are seen in claim 1 of the parent '750 patent:

> **1**. A compact tool carrier configured for standing operator control and having a longitudinal axis and a mass of less than about 1500 kg, the compact tool carrier comprising:
>
> a loader having an arm, the loader being adapted to carry a tool;
>
> a mainframe for supporting the loader, the mainframe having a first side and a second side, the loader being free from direct attachment to the mainframe;
>
> a first linkage pivotally attached to the first side of the mainframe at a first pivot point and pivotally attached to the loader arm at a second pivot point;
>
> a second linkage pivotally attached to the first side of the mainframe at a third pivot point and pivotally attached to the loader arm at a fourth pivot point;
>
> an actuator directly pivotally attached to the first side of the mainframe at a fifth pivot point and directly pivotally attached to the loader arm at a sixth pivot point, the fifth pivot point being distinct from the first pivot point and the third pivot point;
>
> a control station having operator controls for propelling the compact tool carrier forward and for raising and lowering the loader, the control station being mounted toward the rear of the compact tool carrier;
>
> an operator platform for standing operation of the operator controls of the control station; and
>
> an engine disposed forward of the operator platform relative to the longitudinal axis.

Ex. 6 at 6:37–63.

This demonstrates that the term "pivotally attached" does *not* require direct attachment, because "the patentee knew how to restrict" the term to direct attachment when it wanted to. *Intellectual Ventures I LLC v. T-Mobile USA, Inc.,* 902 F.3d 1372, 1379 (Fed. Cir. 2018) (rejecting an attempt to restrict the ordinary scope of a claim term where the patentee expressly restricted the term elsewhere); *see also, e.g., Unwired Planet, LLC v. Apple Inc.,* 829 F.3d 1353, 1359 (Fed. Cir. 2016) ("If the patentee intended to restrict the claims-at-issue to require [a certain limitation expressly recited in other claims], it could have included that same limitation."). These differences are "highly instructive" in determining the intended meaning of the disputed phrase. *Phillips,* 415 F.3d at 1314 ("the context in which a term is used in the

asserted claim can be highly instructive."). For example, in *Phillips,* the *en banc* Federal Circuit noted that the claim term "steel baffles" strongly implied that the term "baffles" did not inherently require a structure made of steel. *Id.; see also Wilson Sporting Goods Co. v. Hillerich & Bradsby Co.,* 442 F.3d 1322, 1329 (Fed. Cir. 2006) (finding that because the "term 'rigid' appears in connection with 'insert'" in one claim, but not in other claims, "it implies that the term 'insert,' when used elsewhere in the patent, does not inherently carry a 'rigid' limitation"). Similarly here, the claim term "free from direct attachment" gives a strong indication that the term "pivotally attached" is not limited to a direct connection.

The specification also used specific language when a *direct* connection was intended. *See, e.g.,* Ex. 1 at 3:22–24 ("In the illustrated embodiment, the drive mechanism 18 is *directly mounted (i.e. connected without intermediary parts*) to the mainframe") (emphasis added); *see also* 4:18–20 ("the engine (not shown) and the drive mechanism 18 comprising tracks or wheels are *directly connected* to the mainframe.") (emphasis added). This shows that the broader claim language is not limited to direct connections. *See Acumed LLC v. Stryker Corp.,* 483 F.3d 800, 807 (Fed. Cir. 2007) ("The intrinsic evidence of the specification therefore suggests that the patentees knew how to restrict their claim coverage . . . ."). In fact, the specification expressly points out that "directly" is intended to mean "connected without intermediary parts." Although the preferred embodiment may have included a number of direct connections between the various parts of the compact tool carrier, the claims are not limited to the preferred embodiment. *Phillips,* 415 F.3d at 1323 ("although the specification often describes very specific embodiments of the invention, we have repeatedly warned against confining the claims to those embodiments.").

None of the intrinsic evidence supports Toro's attempt to read a limitation requiring "no

other intervening structure" into this straightforward claim language. When Vermeer intended a direct pivotal connection, it expressly said so. Toro's proposed construction would improperly import limitations from the preferred embodiment into the claim and render other language in the claims superfluous. Therefore, Vermeer respectfully requests the Court to reject Toro's proposed construction and provide the following clarifying instruction to the jury, if necessary: "The claim language 'pivotally attached' does not require a direct attachment with no intervening structure."

4. The plain and ordinary meaning of "front linkage" and "rear linkage" does not require any particular orientation.

Claim Term/Phrase	Vermeer's Proposed Construction	Toro's Proposed Construction
"front linkage"	Plain and ordinary meaning "Front" is a term used for convenience of description and does not require any particular orientation	linkage attached to the forward pivot point of the mainframe and the forward pivot point of the loader arm in the down position
"rear linkage"	Plain and ordinary meaning "Rear" is a term used for convenience of description and does not require any particular orientation	linkage attached to the rear pivot point of the mainframe and the rear pivot point of the loader arm in the down position

The terms "front linkage" and "rear linkage" do not require any construction, because a juror can readily understand the ordinary and customary meaning of this phrase. *Phillips,* 415 F.3d at 1314. Further, the terms "front" and "rear" do not require any particular orientation; rather they are used only for convenience of reference. The specification stresses this point: "The use of terms indicating a particular orientation (e.g., 'top', 'bottom', 'side', etc.) is for convenience of description and does not require any particular orientation of the item described." Ex. 1 at 6:36–39.

Toro asks the Court to ignore the specification's express language, which forecloses an orientation-based construction. Further, Toro also seeks to graft additional limitations onto this plain claim language by asking the Court to construe "front linkage" to require that it be "attached to the forward pivot point of the mainframe *and* the forward pivot point of the loader arm." Similarly, Toro seeks to limit "rear linkage" to require that it be "attached to the rear pivot point of the mainframe *and* the rear pivot point of the loader arm." There is no support for Toro's strained proposed constructions in the claim language or intrinsic record.

Not only does Toro ask the Court to improperly import orientation limitations dictating which pivot points of the loader can be the "front linkage pivot point" or the "rear linkage pivot point," but Toro also proposes limiting where the "front linkage" and "rear linkage" attach to the mainframe. There is simply no support for this improperly narrow reading of the straightforward claim language.

5. The plain and ordinary meaning of "pivot point" does not require construction.

Claim Term/Phrase	Vermeer's Proposed Construction	Toro's Proposed Construction
"pivot point"	Plain and ordinary meaning	an axis of pivotal motion

Toro's proposed construction will not help the jury. Toro simply changes "pivot" to "pivotal motion" and replaces the noun "point" with "axis." There is no support in the intrinsic evidence for these changes. Because Toro's claim construction is less clear than the straightforward claim language expressly chosen to define the claimed invention, Vermeer respectfully requests the Court to reject Toro's proposed construction.

C. "Barrier Guard" Is Not Indefinite.

Claim Term/Phrase	Vermeer's Proposed Construction	Toro's Proposed Construction
"barrier guard"	Perimeter of the machine structure	Defendant Toro contends this term, as used in the '266 Patent, is indefinite and incapable of construction
"(1) disposed within the barrier guard and/or (2) disposed forward of the barrier guard"	(1) disposed within the perimeter of the machine structure and/or (2) disposed forward of the perimeter of the machine This limitation requires that at least one of the conditions be met.	Defendant Toro contends the term "barrier guard", as used in the '266 Patent, is indefinite and incapable of construction. With respect to the remaining claim terms, plain and ordinary meaning.

"Barrier guard" is used in the '266 patent to describe "the perimeter of the machine structure." *See* Ex. 1 at 3:66–4:4 ("wherein the perimeter of the machine structure ... forms a barrier guard as shown in FIGS. 2 and 3"), 4:30–32 ("positioned within the barrier guard of the perimeter of the machine structure as shown in FIGS 2 and 3"). This perimeter of the machine structure is immediately evident to one of ordinary skill in the art, as seen in Figures 2 and 3:

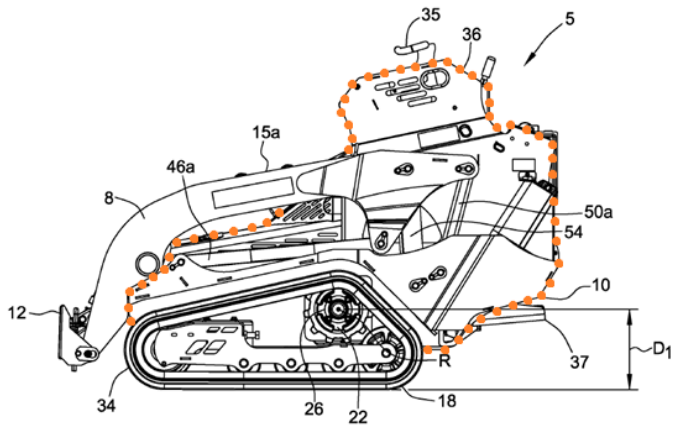

FIG. 2

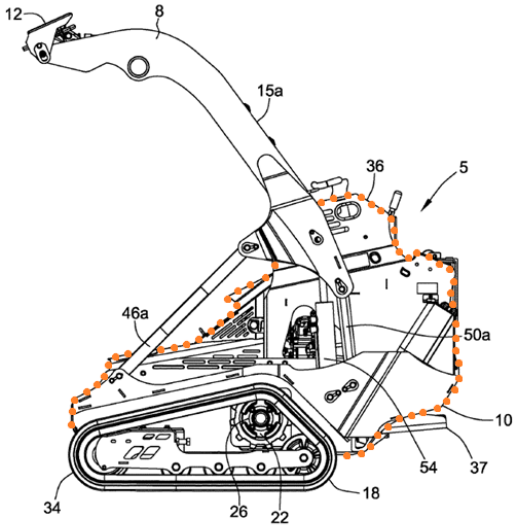

FIG. 3

Ex. 1 at Figs. 2, 3 (annotations added). Thus, Vermeer's proposed constructions for the "barrier guard" terms are consistent with the plain language and disclosure of the '266 patent. In light of this clear guidance in the specification, Toro has no basis for disputing Vermeer's construction—much less asserting that "barrier guard" is indefinite (which would wrongly render the claim invalid under 35 U.S.C. § 112(b)). *See Nautilus, Inc. v. Biosig Instruments*, 572 U.S. 898, 901 (2014) ("[W]e hold that a patent is invalid for indefiniteness if its claims, read in light of the specification delineating the patent, and the prosecution history, fail to inform, with reasonable certainty, those skilled in the art about the scope of the invention."). One skilled in the art reviewing the specification of the '266 patent would have no problem determining the perimeter of the machine structure, which was expressly identified as the "barrier guard." Therefore, the Court should reject Toro's invalidity argument and adopt Vermeer's proposed construction.[8]

D. The Court Should Construe the Term "Disposed Below the Operator Controls" Consistently with the Intrinsic Evidence.

Claim Term/Phrase	Vermeer's Proposed Construction	Toro's Proposed Construction
"being disposed below the operator controls of the control station"	Plain and ordinary meaning ("being disposed at a lower level than the operator controls")	Plain and ordinary meaning ("being disposed beneath the operator controls")

The term "being disposed below the operator controls of the control station" does not require any construction. Indeed, both of the parties agree that it should be afforded its plain and ordinary meaning. But the parties dispute the proper meaning of the word "below" in this

[8] Vermeer has proposed that the "and/or" language in this claim term require that only one of the conditions be met. Toro states that—except for the words "barrier guard"—this claim term should be given its plain and ordinary meaning. Therefore, Vermeer does not understand there to be a dispute between the parties as to whether "and/or" requires only one of the conditions to be met. But given Toro's position that other disjunctive terms be construed as conjunctive, Vermeer requests the Court to provide the jury with the following clarifying instruction: "This limitation requires that at least one of the conditions be met."

context. Vermeer's proposed meaning for "below" is "at a lower level than," which comports with its clear meaning in the specification and plain English. *See* Ex. 4 ("**below** . . . **1** at a lower level than").

The final limitation of claim 1 requires "the first linkage pivot point, second linkage pivot, and the actuator pivot point being disposed below the operator controls of the control station." Ex. 1 at 6:47–7:5 (claim 1). Toro seems to seek a construction requiring that these pivot points be positioned directly below the operator controls (another attempt to manufacture a non-infringement argument). There is no support for this narrow reading of this claim language. In fact, the '266 patent forecloses such a narrow construction. As shown in Figure 3 below, the red circle indicates where the actuator pivot point is relative to the operator controls:

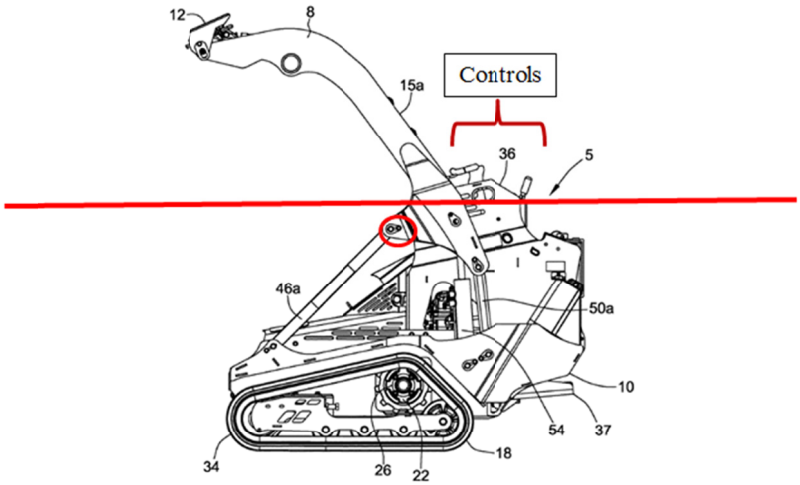

FIG. 3

Ex. 1, Fig. 3. As this figure demonstrates, the actuator pivot point is not directly underneath the operator controls, as Toro wrongly suggests the claim should require. The actuator pivot point is, however, at a lower level than the operator controls, as illustrated by the red lines, above. In light of the foregoing, only Vermeer's construction is consistent with the specification.

Vermeer respectfully requests the Court to reject Toro's proposed construction and

provide the following clarifying instruction to the jury: "The claim term 'below' means 'at a lower level than.'"

E. The Court Should Construe the Term "Disposed Between the Operator Controls and the Bottom of the Rigid Frame and/or Disposed Forward of the Control Station" Consistently with the Intrinsic Evidence.

Claim Term/Phrase	Vermeer's Proposed Construction	Toro's Proposed Construction
"the first, second, third, fourth, fifth, and sixth pivot points are (1) disposed between the operator controls and the bottom of the rigid frame and/or (2) disposed forward of the control station"	Plain and ordinary meaning This limitation only requires that the identified pivot points *individually* satisfy one or both of the identified characteristics.	Plain and ordinary meaning ("in the space separating the operator controls and the bottom of the rigid frame") This limitation requires that the identified pivot points collectively satisfy one or both of the identified conditions. "between the operator controls and bottom of the rigid frame" should be interpreted to mean "in the space separating the operator controls and the bottom of the rigid frame"

The above term does not require any construction. Both of the parties agree that it should be afforded its plain and ordinary meaning. As part of this plain and ordinary meaning, Vermeer proposes that the Court require only that the identified pivot points *individually* satisfy one or both of the identified characteristics. This is consistent with the intrinsic record.

Toro seeks a narrow definition of this term, one that would require that all of the identified pivot points *collectively* satisfy one or both of the identified characteristics. The patent claims themselves, however, demonstrate that the identified pivot points are not to be considered

collectively. For example, dependent claim[9] 10 adds a limitation to independent claim 7, from which claim 10 depends. As shown in the highlighted excerpt below, claim 10 identifies the placement of particular pivot points individually:

> **7**. A loader apparatus for standing or walk-behind operator control and comprising:
>
> a control station having operator controls toward a rear of the loader apparatus;
>
> a loader adapted to carry a tool, the loader being moveable between a down position and a vertically raised position;
>
> a rigid frame for supporting the control station and the loader, the rigid frame having a first side, a second side, a top, and a bottom;
>
> a first linkage pivotally attached to the first side of the rigid frame at a first pivot point and pivotally attached to the loader at a second pivot point;
>
> an actuator pivotally attached to the first side of the rigid frame at a third pivot point and pivotally attached to the loader at a fourth pivot point; and
>
> a second linkage pivotally attached to the first side of the rigid frame at a fifth pivot point and pivotally attached to the loader at a sixth pivot point, wherein, as the loader travels from the down position to the vertically raised position, the first, second, third, fourth, fifth and sixth pivot points are (1) disposed between the operator controls and the bottom of the rigid frame and/or (2) disposed forward of the control station.

> **10**. The loader apparatus as set forth in claim **7** wherein, in the vertically raised position, the first and second pivot points are disposed forward of the control station and the third, fourth, fifth and sixth pivot points are disposed between the operator controls and the bottom of the rigid frame.

Ex. 1 at 7:41–56. If the pivot points were intended to be considered collectively, then claim 10 would be inconsistent with claim 7. This logically forecloses Toro's proposed construction. *See, e.g., Wright Medical Technology, Inc. v. Osteonics Corp.*, 122 F.3d 1440, 1445 (Fed. Cir. 1997)

---

[9] As noted above, a "dependent claim" is a claim that references an earlier claim—incorporating all the limitations of the referenced claim—and then adds additional limitations. *See* 35 U.S.C. § 112(d).

("we must not interpret an independent claim in a way that is inconsistent with a claim which depends from it"); *see also Rambus Inc. v. Infineon Tech. AG,* 318 F.3d 1081, 1093 (Fed. Cir. 2003) (an appropriate claim construction should "not render claim language in dependent claims meaningless").

Vermeer respectfully requests that the Court reject Toro's proposed construction and provide the following clarifying instruction to the jury: "This limitation only requires that the identified pivot points *individually* satisfy one or both of the identified characteristics."

V. CONCLUSION

Vermeer's proposed constructions are consistent with the plain meaning of the claim language and the intrinsic evidence. By contrast, Toro's proposed constructions would improperly import limitations from the preferred embodiment described in the specification into the claims. Adopting Toro's proposed constructions would also erase the distinctions between independent and dependent claims in the '266 patent, violating the doctrine of claim differentiation. Vermeer respectfully requests the Court to adopt its proposed constructions.

Dated: August 23, 2019

By: */s/ Marc Vander Tuig*

Richard L. Brophy (pro hac vice)
Zachary C. Howenstine (pro hac vice)
Margaret R. Szewczyk (pro hac vice)
Mark A. Thomas (pro hac vice)
Marc W. Vander Tuig (pro hac vice)
Armstrong Teasdale LLP
7700 Forsyth Blvd., Suite 1800
St. Louis, Missouri 63105
(314) 621-5070 (telephone)
(314) 621-5065 (facsimile)
rbrophy@armstrongteasdale.com
zhowenstine@armstrongteasdale.com
mszewczyk@armstrongteasdale.com
mathomas@armstrongteasdale.com
mvandertuig@armstrongteasdale.com

Michael R. Reck
Espnola F. Cartmill
Belin McCormick, P.C.
666 Walnut Street, Suite 2000
Des Moines, IA 50309-3989
Telephone: (515) 283-4645
Facsimile: (515) 558-0645
mrreck@belinmccormick.com
efcartmill@belinmccormick.com

ATTORNEYS FOR PLAINTIFF VERMEER MANUFACTURING COMPANY