.

UNITED STATES PATENT AND TRADEMARK OFFICE

_____

BEFORE THE PATENT TRIAL AND APPEAL BOARD

_____

KUBOTA NORTH AMERICA CORPORATION,

Petitioner

v.

VERMEER MANUFACTURING COMPANY,

Patent Owner

_____

SECOND DECLARATION OF STEVEN ALAN VELINSKY, PHD, PE UNDER 37 C.F.R. § 1.68 IN SUPPORT OF PETITIONER'S REPLY

I, Steven Velinsky, do hereby declare as follows:

1. I make this declaration based upon my own personal knowledge and, if called upon to testify, would testify competently to the matters stated herein.

2. I understand and agree with the Board's construction of the claim term "mainframe" to mean "the primary supporting structure" of the machine. In my first declaration, the machine of KR996 that I am discussing is the compact utility loader (or mini skid steer) having a loader, which includes the vehicle 10 and the loader unit 40. Both the vehicle and the loader unit include frame portions, the vehicle has the body 11 and the loader unit has the fixture 41. And it is the fixture 41 that directly supports the loader arms (boom) 44, which further connects and supports the bucket attachment 47 and bucket 48. The primary supporting structure of the KR996 compact utility loader is thus the combination of the body 11 and the fixture 41. Either of these two frame portions, considered alone, would be incomplete for the compact utility loader. That is, both the body 11 and the fixture 41 are critical and important to providing a support structure of the compact utility loader.

3. I have been told that the PO argues that the body 11 is the primary support structure. I believe that this is incorrect because that would only be the primary support structure for the vehicle 10, not the compact utility loader that includes both the vehicle and the loader unit 40. The body 11 does not directly support the loader arms (boom) 44, that is done by the fixture 41. Therefore, the

primary supporting structure of KR996's compact utility loader (not the vehicle 10 alone) is the combination of the body 11 and the fixture 41.

4. Figs. 9 and 21 are shaded below to illustrate components that at least are portions of the mainframe and the primary supporting structure of the KR996 compact utility loader.

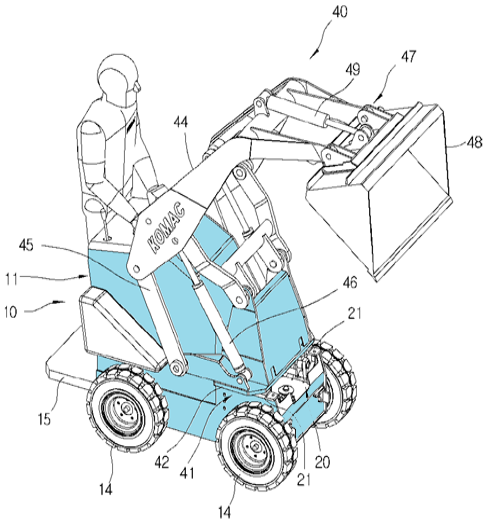

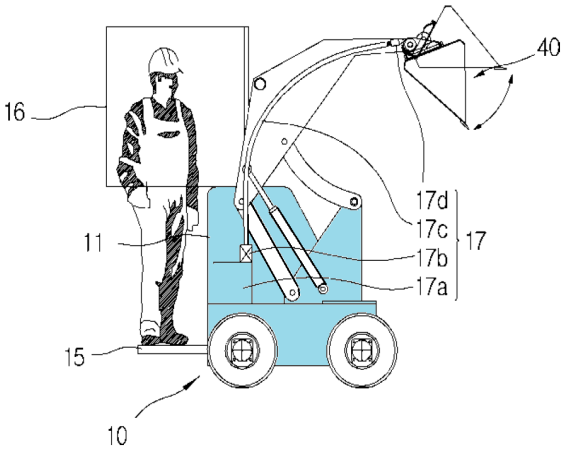

5. Also, in my experience using these types of construction machines in working with the California State Department of Transportation, I know that there can be benefits to having a dedicated machine, such as a dedicated loader, and there are certainly benefits to having a single machine that can convert from a loader to another type of machine. The mini skid steers address relatively small jobs and I believe that machine reconfigurability would be important - various tools used at

different times through the work day. However, sometimes a job does not require different types of machines. For example, a mini skid steer can be used for an individual task only such as routing pavement or placing crack sealant on the highway. For these types of jobs, a dedicated machine is less complex, requires less attachment points, and has fewer components, and is thus less likely to fail. Also, a dedicated machine is usually less expensive than a machine that can convert from one type (e.g., loader) to another type of machine.

This declaration and my opinions herein are made to the best of my knowledge and understanding, and based on the material available to me, at the time of signing this declaration. I declare that all statements made herein on my own knowledge are true and that all statements made on information and belief are believed to be true, and further, that these statements were made with the knowledge that willful false statements and the like so made are punishable by fine or imprisonment, or both, under Section 1001 or Title 18 of the United States Code.

Date: Dec. 3, 2025

Steven A Velinsky

Steven Alan Velinsky