US010260213B2

(12) **United States Patent**
Sumiyoshi et al.

(10) **Patent No.: US 10,260,213 B2**
(45) **Date of Patent: Apr. 16, 2019**

(54) **WORKING MACHINE**

(71) Applicant: **KUBOTA CORPORATION**, Osaka (JP)

(72) Inventors: **Ryohei Sumiyoshi**, Osaka (JP); **Hideo Imai**, Osaka (JP); **Noriyoshi Kubo**, Osaka (JP); **Hiroyuki Anami**, Osaka (JP); **Hiroyuki Hata**, Osaka (JP); **Toyoaki Yasuda**, Osaka (JP); **Masahiro Kuroda**, Osaka (JP); **Kohei Higashiyama**, Osaka (JP); **Yuji Yamashita**, Osaka (JP); **Satoshi Tajima**, Osaka (JP); **Shunichiro Mori**, Osaka (JP); **Hayato Ido**, Osaka (JP); **Toshihiko Takemura**, Osaka (JP); **Shinsuke Hisatake**, Osaka (JP); **Hajime Tamaki**, Osaka (JP); **Hiroshi Koyamatsu**, Osaka (JP)

(73) Assignee: **KUBOTA CORPORATION**, Osaka (JP)

(*) Notice: Subject to any disclaimer, the term of this patent is extended or adjusted under 35 U.S.C. 154(b) by 0 days.

(21) Appl. No.: **15/794,468**

(22) Filed: **Oct. 26, 2017**

(65) **Prior Publication Data**

US 2018/0044885 A1 Feb. 15, 2018

Related U.S. Application Data

(63) Continuation of application No. 15/264,138, filed on Sep. 13, 2016, now Pat. No. 9,828,744, which is a (Continued)

(30) **Foreign Application Priority Data**

Sep. 30, 2014 (JP) 2014-202383
Sep. 30, 2014 (JP) 2014-202384
(Continued)

(51) **Int. Cl.**
B60K 5/00 (2006.01)
E02F 9/08 (2006.01)
(Continued)

(52) **U.S. Cl.**
CPC ***E02F 9/0866*** (2013.01); ***B60K 5/00*** (2013.01); ***B60K 5/02*** (2013.01); ***B60K 5/1208*** (2013.01);
(Continued)

(58) **Field of Classification Search**
CPC B60K 5/02; B60K 6/365; B60K 17/105; B60K 5/1208; B60K 17/00; E02F 3/964; E02F 9/0866; E02F 9/16; E02F 9/2004
See application file for complete search history.

(56) **References Cited**

U.S. PATENT DOCUMENTS

3,715,002 A * 2/1973 Halls G05G 5/08 180/271
5,823,285 A * 10/1998 Tsuchihashi B60K 17/105 180/242
(Continued)

FOREIGN PATENT DOCUMENTS

JP 48-28170 8/1973
JP 57-108479 12/1980
(Continued)

OTHER PUBLICATIONS

Office Action issued in Japan Counterpart Patent Appl. No. 2014-202388, dated Dec. 5, 2017.
(Continued)

Primary Examiner — Hau V Phan
(74) *Attorney, Agent, or Firm* — Greenblum & Bernstein, P.L.C.

(57) **ABSTRACT**

A working machine includes a travel device, a motive power transmission device configured to transmit a motive power
(Continued)

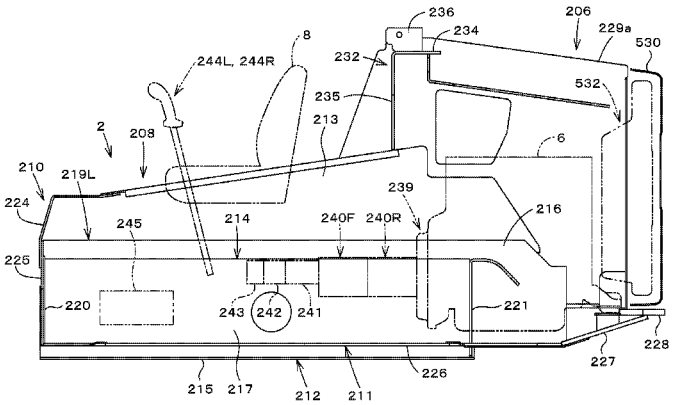

to the travel device, a transmission case configured to house the motive power transmission device, and a hydraulic operation fluid tank disposed on an upper surface of the transmission case.

14 Claims, 31 Drawing Sheets

Related U.S. Application Data

continuation of application No. 14/862,441, filed on Sep. 23, 2015, now Pat. No. 9,567,729.

(30) **Foreign Application Priority Data**

Sep. 30, 2014 (JP) 2014-202388
Sep. 30, 2014 (JP) 2014-202389

(51) **Int. Cl.**

E02F 3/34	(2006.01)
E02F 9/16	(2006.01)
B60K 17/00	(2006.01)
B60K 5/02	(2006.01)
B60K 5/12	(2006.01)
B60R 13/08	(2006.01)
B62D 33/063	(2006.01)
E02F 3/42	(2006.01)
E02F 9/02	(2006.01)

(52) **U.S. Cl.**

CPC ***B60K 5/1216*** (2013.01); ***B60K 17/00*** (2013.01); ***B60R 13/0838*** (2013.01); ***B62D 33/063*** (2013.01); ***E02F 3/3414*** (2013.01); ***E02F 3/422*** (2013.01); ***E02F 9/02*** (2013.01); ***E02F 9/0883*** (2013.01); ***E02F 9/0891*** (2013.01); ***E02F 9/16*** (2013.01); ***E02F 9/166*** (2013.01); *B60Y 2200/415* (2013.01); *E02F 9/0808* (2013.01)

(56) **References Cited**

U.S. PATENT DOCUMENTS

5,995,895	A	11/1999	Watt	
6,199,646	B1	3/2001	Tani	
6,325,166	B1	12/2001	Shimada	
6,971,469	B2	12/2005	Umemoto	
7,328,760	B2	2/2008	Inaoka	
7,407,030	B2	8/2008	Yasuda	
7,416,513	B2	8/2008	Amann	
8,151,927	B2 *	4/2012	Sakikawa	B60K 7/0015 180/305
8,607,904	B2 *	12/2013	Fukumoto	B62D 49/0635 180/9.21
8,851,209	B2	10/2014	Fukumoto	
9,316,310	B2 *	4/2016	Kinugawa	F16H 61/421
9,828,744	B2 *	11/2017	Sumiyoshi	B60K 5/02
2003/0033898	A1 *	2/2003	Morimoto	F16H 59/02 74/335
2004/0149462	A1	8/2004	Okamoto	
2005/0139034	A1 *	6/2005	Komine	E02F 9/2004 74/566
2008/0252102	A1 *	10/2008	Fukunaga	B60R 13/0815 296/190.08
2008/0296032	A1 *	12/2008	Masumoto	E02F 9/2004 172/321
2009/0029826	A1	1/2009	Eguchi	
2009/0242302	A1 *	10/2009	Fujiki	A01B 51/026 180/89.12
2009/0248258	A1 *	10/2009	Fukumoto	A01B 79/005 701/50
2009/0250972	A1 *	10/2009	Endou	B62D 33/07 296/190.06
2009/0301429	A1	12/2009	Takashina	
2011/0093150	A1 *	4/2011	Yanagisawa	B60K 6/365 701/22
2011/0175005	A1 *	7/2011	Sakamoto	E02F 3/964 251/129.01
2011/0303045	A1 *	12/2011	Masumoto	G05G 1/06 74/504
2012/0191307	A1 *	7/2012	Matsuzaki	B60W 10/06 701/51
2013/0036729	A1 *	2/2013	Kinugawa	F16H 61/421 60/446
2013/0213178	A1 *	8/2013	Masumoto	G05G 1/04 74/523

FOREIGN PATENT DOCUMENTS

JP	01-93178	6/1989
JP	02-143326	12/1990
JP	05-063949	8/1993
JP	2005 222330	8/2005
JP	2010-65437	3/2010
JP	2011-031844	2/2011
JP	2011-088589	5/2011
JP	5541709	1/2012
JP	2012-207531	10/2012
JP	2014-177924	9/2014
WO	2005035883	11/2007

OTHER PUBLICATIONS

Notification of Reasons for Refusal issued with respect to corresponding Japanese Application No. P 2014-202389, dated Jul. 25, 2017.

Notification of Reasons for Refusal issued with respect to corresponding Japanese Application No. P 2014-202383, dated Jul. 25, 2017.

Notification of Reasons for Refusal issued with respect to counterpart Japanese Application No. P 2014-202384, dated Oct. 3, 2017.

* cited by examiner

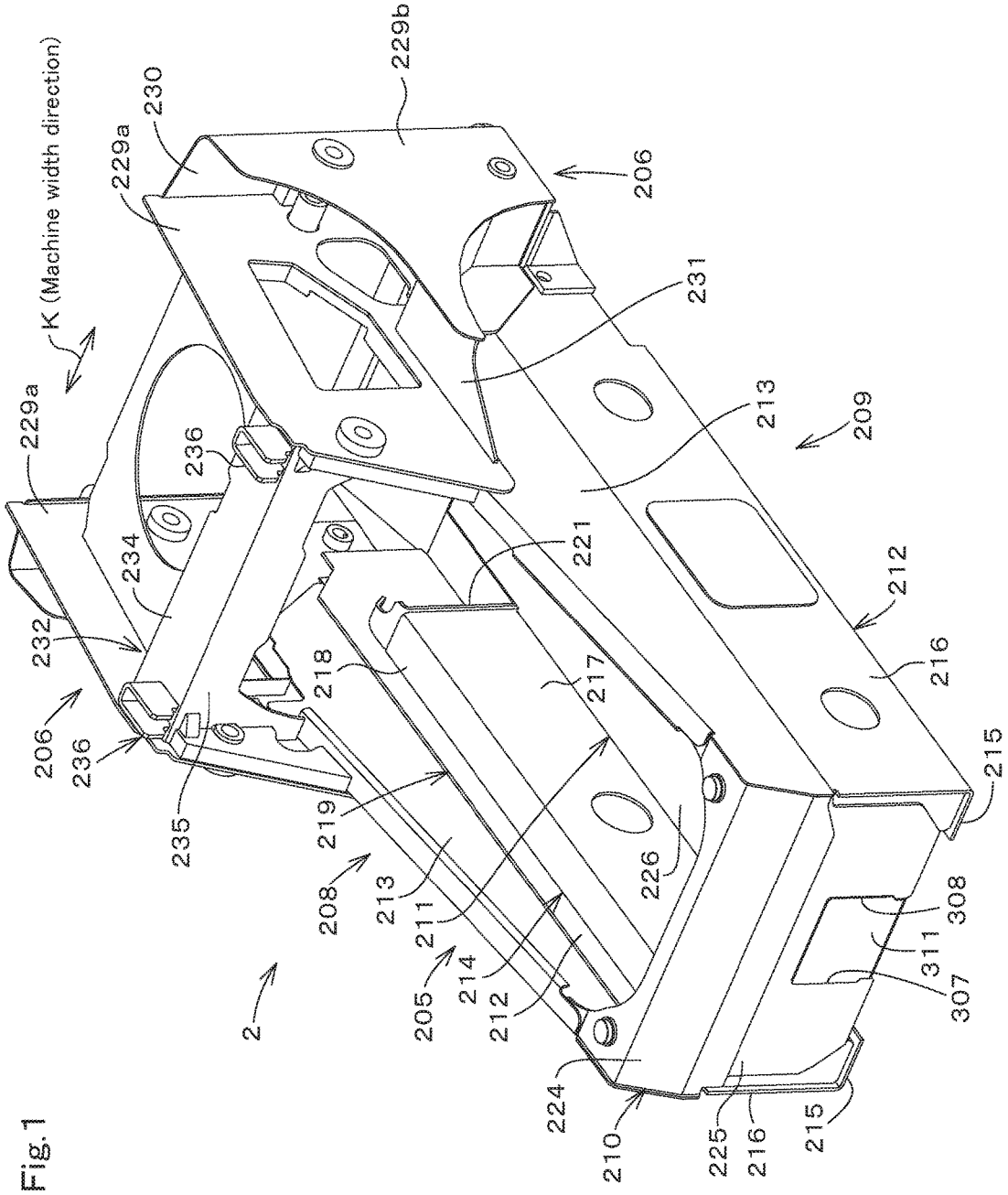
K (Machine width direction)
229b
230
229a
206
231
213
209
229a
236
234
221
212
232
218
217
216
206
236
235
219
215
208
213
211
226
308
311
307
214
205
212
2
224
210
225
216
215

Fig.1

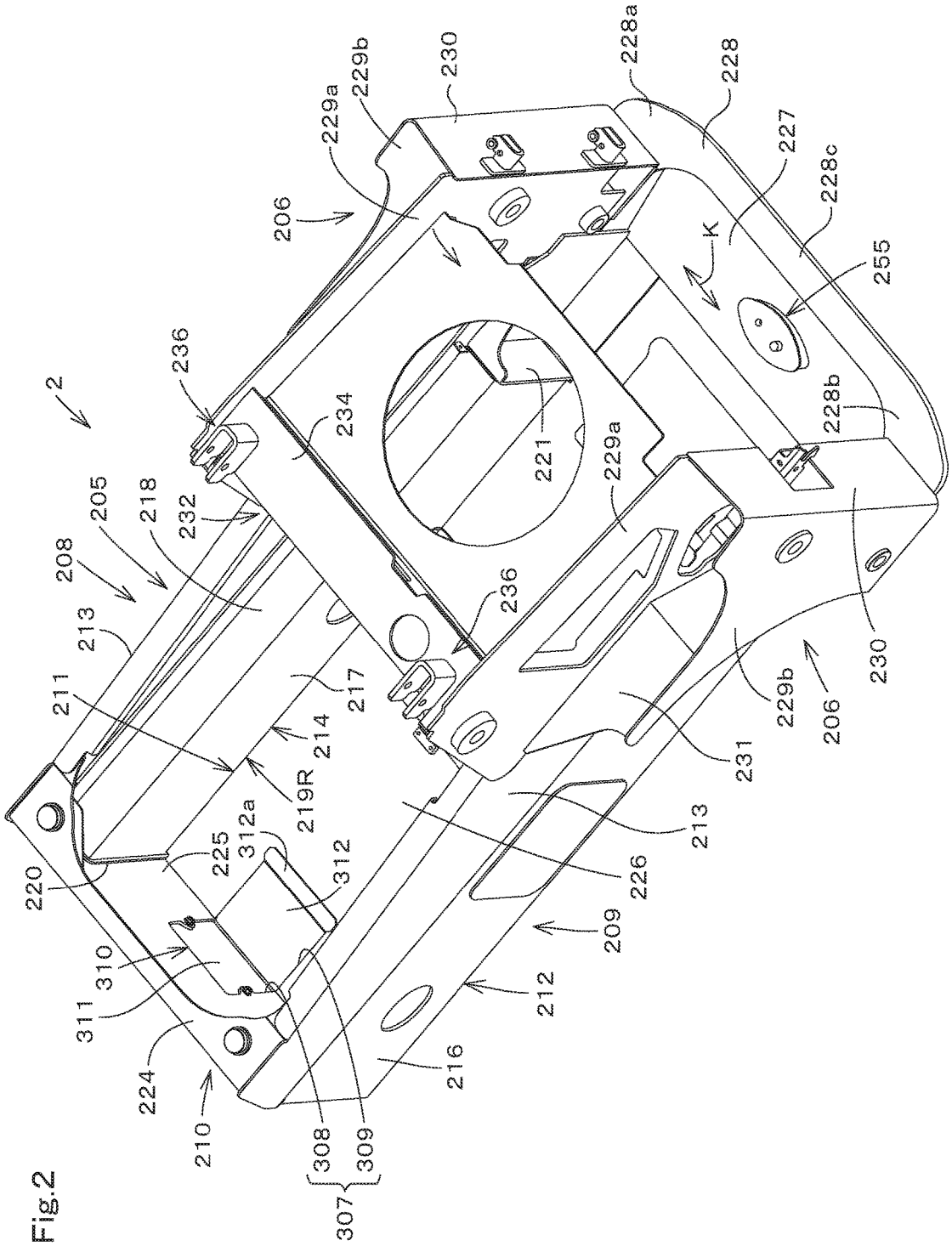
2
205
206
208
209
210
211
212
213
214
216
217
218
219R
220
221
224
225
226
227
228
228a
228b
228c
229a
229b
230
231
232
234
236
255
307
308
309
310
311
312
312a
K

Fig.2

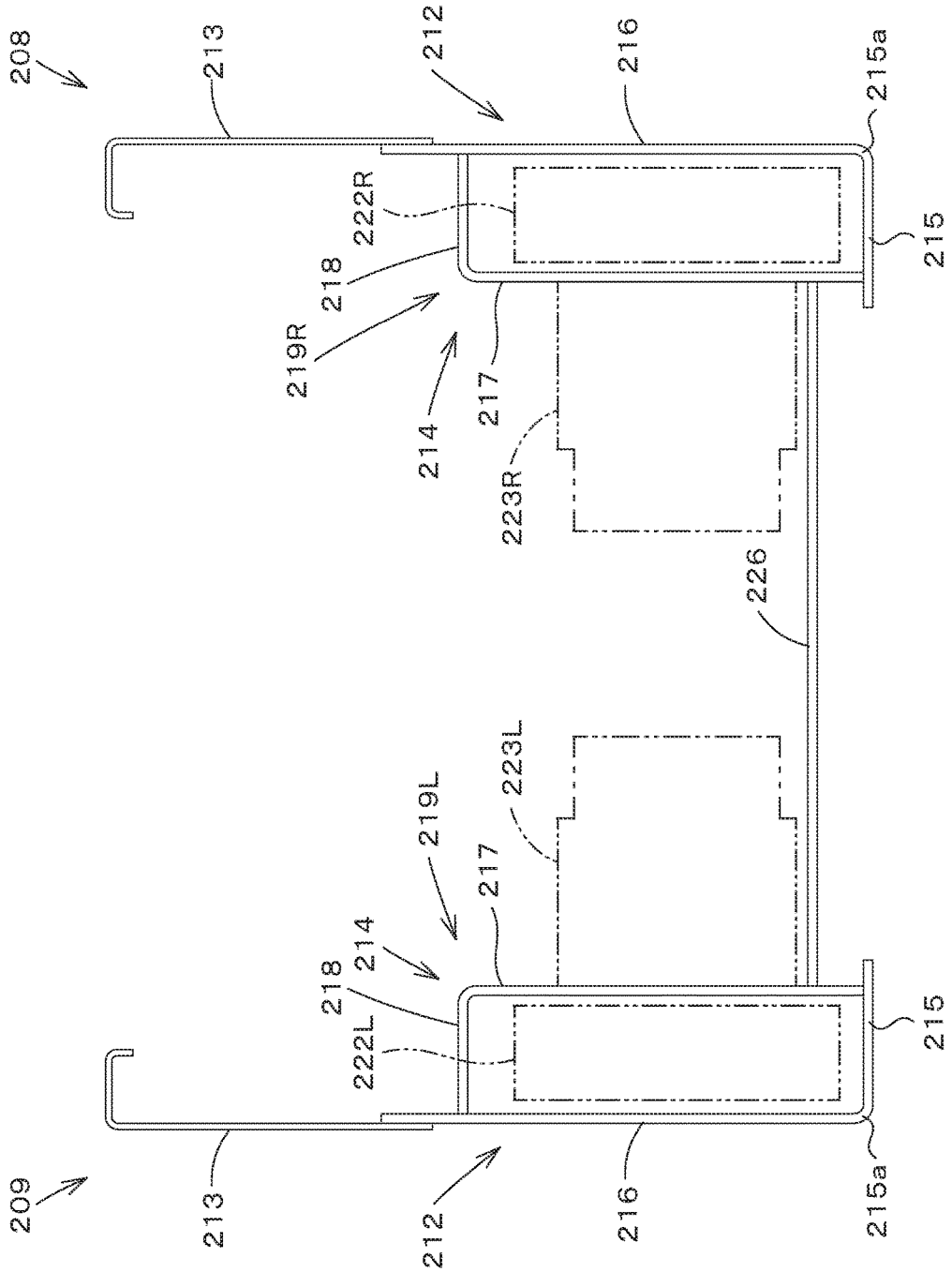
208
209
213
212
216
215a
215
222R
218
219R
214
217
223R
226
223L
219L
222L

Fig.3

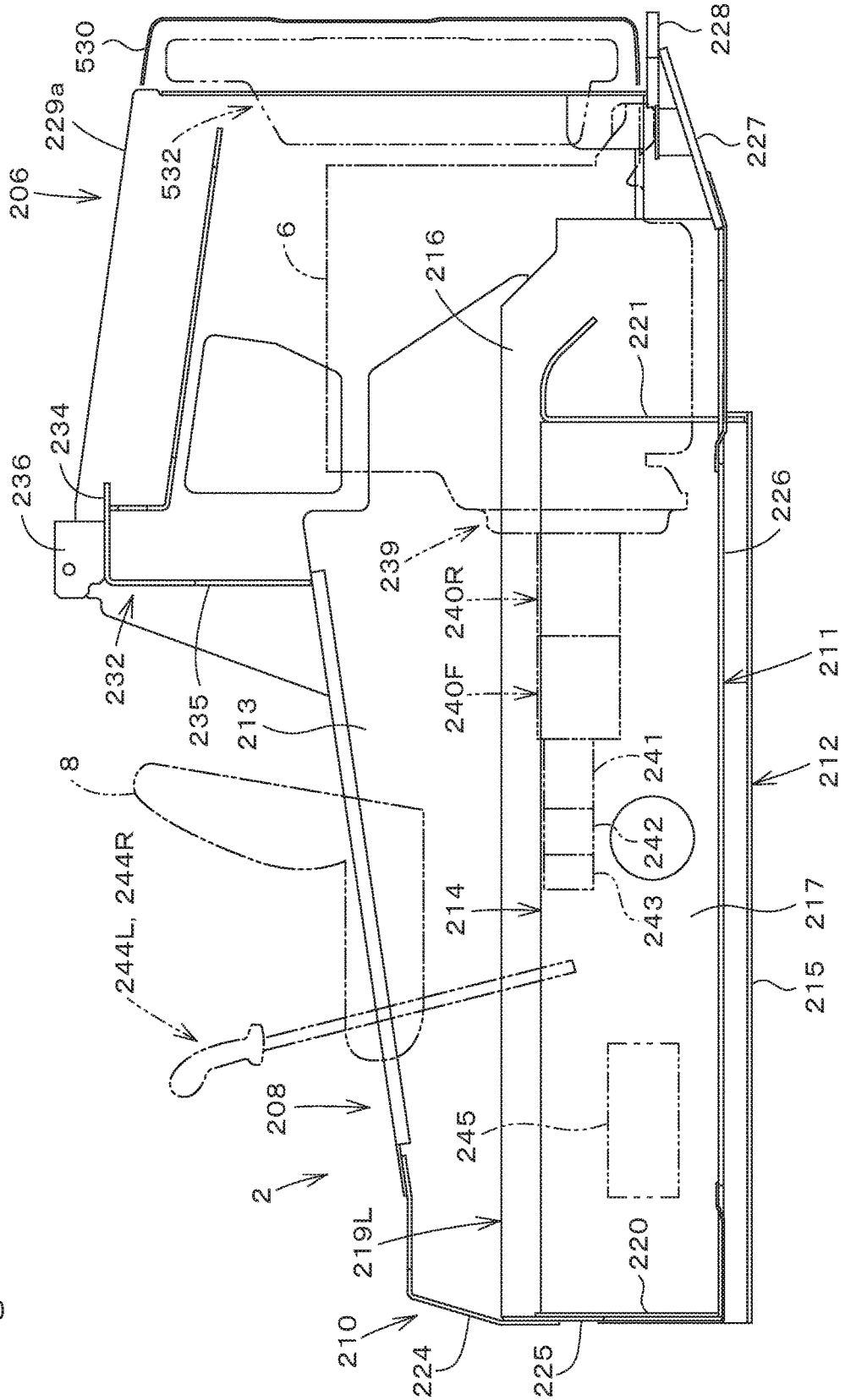
530
229a
206
532
6
216
228
227
221
234
236
226
239
240R
240F
232
235
213
211
212
8
241
242
244L, 244R
214
243
217
215
208
245
2
219L
220
210
224
225

Fig.4

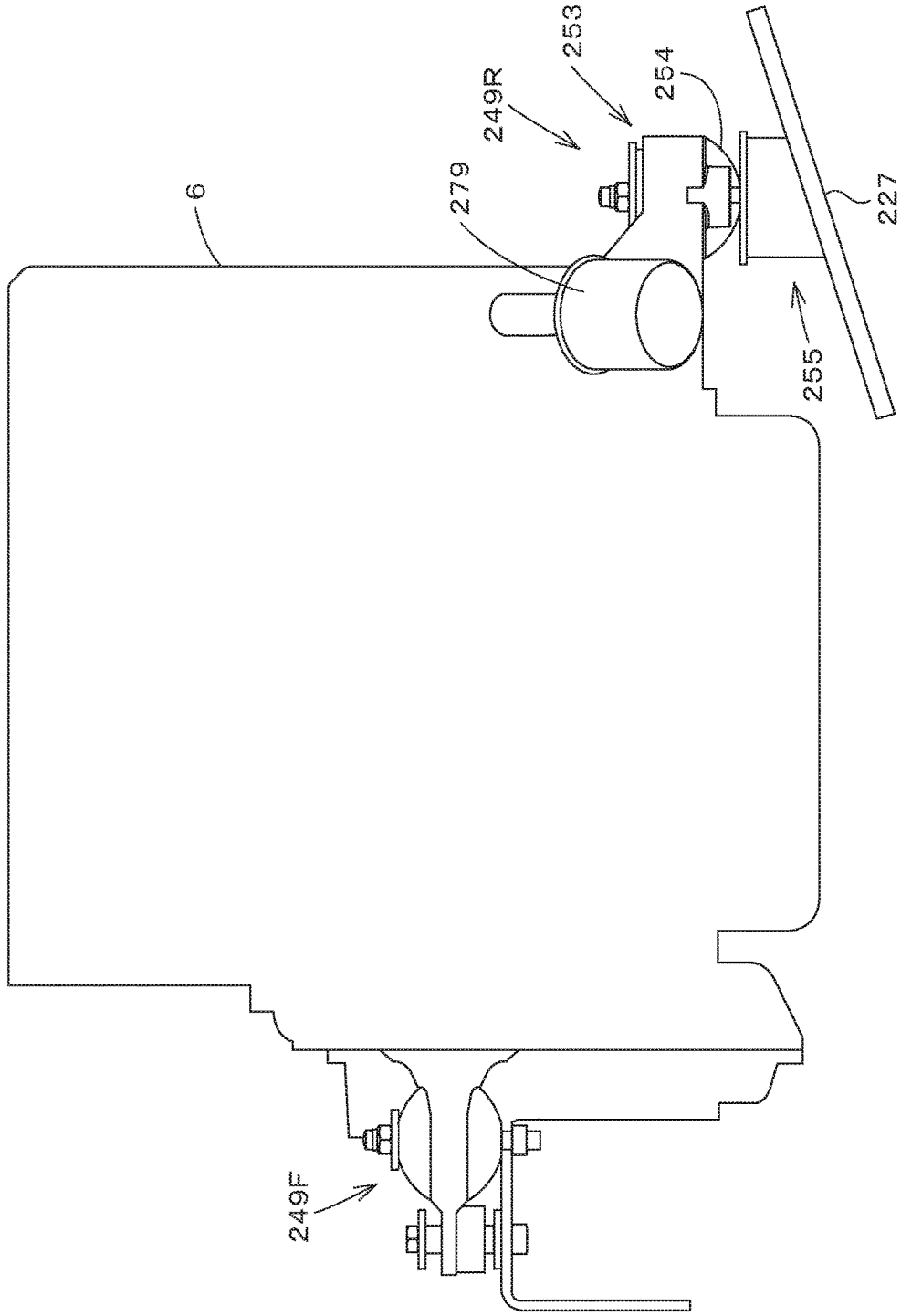

Fig.5

Fig.6

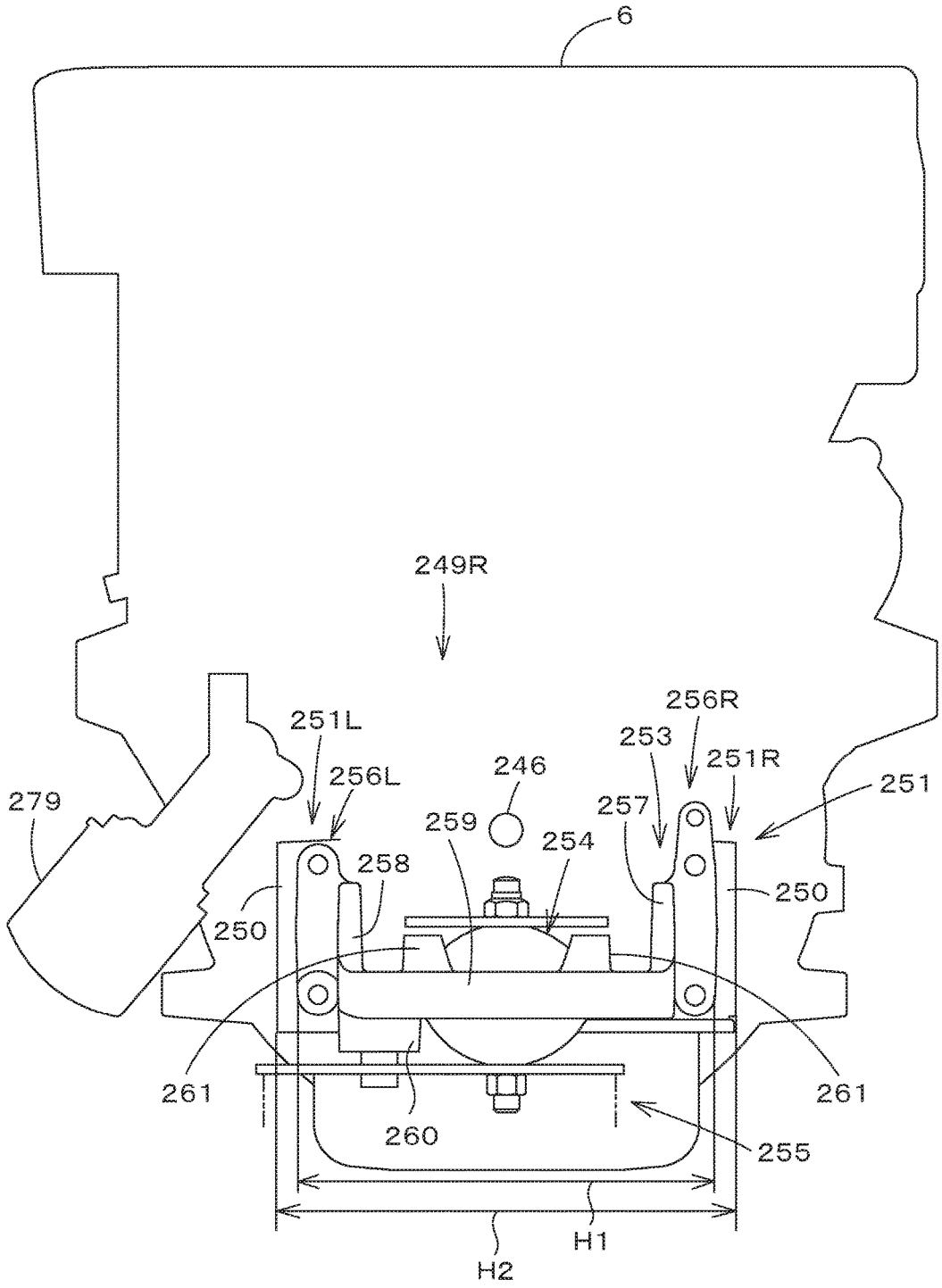
6
249R
251L
256L
246
256R
253
251R
251
279
259
257
254
258
250
250
261
261
260
255
H1
H2

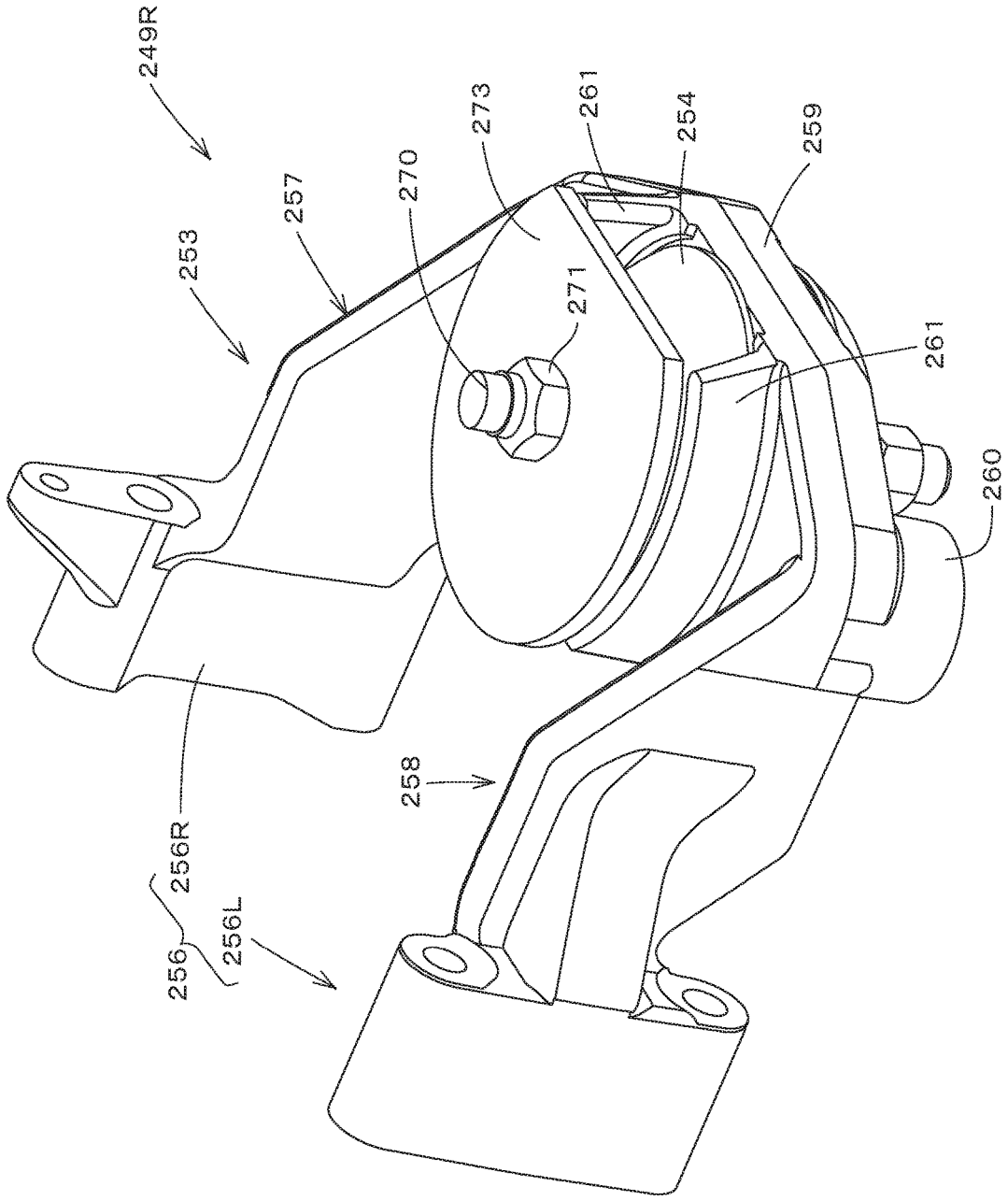

Fig.7

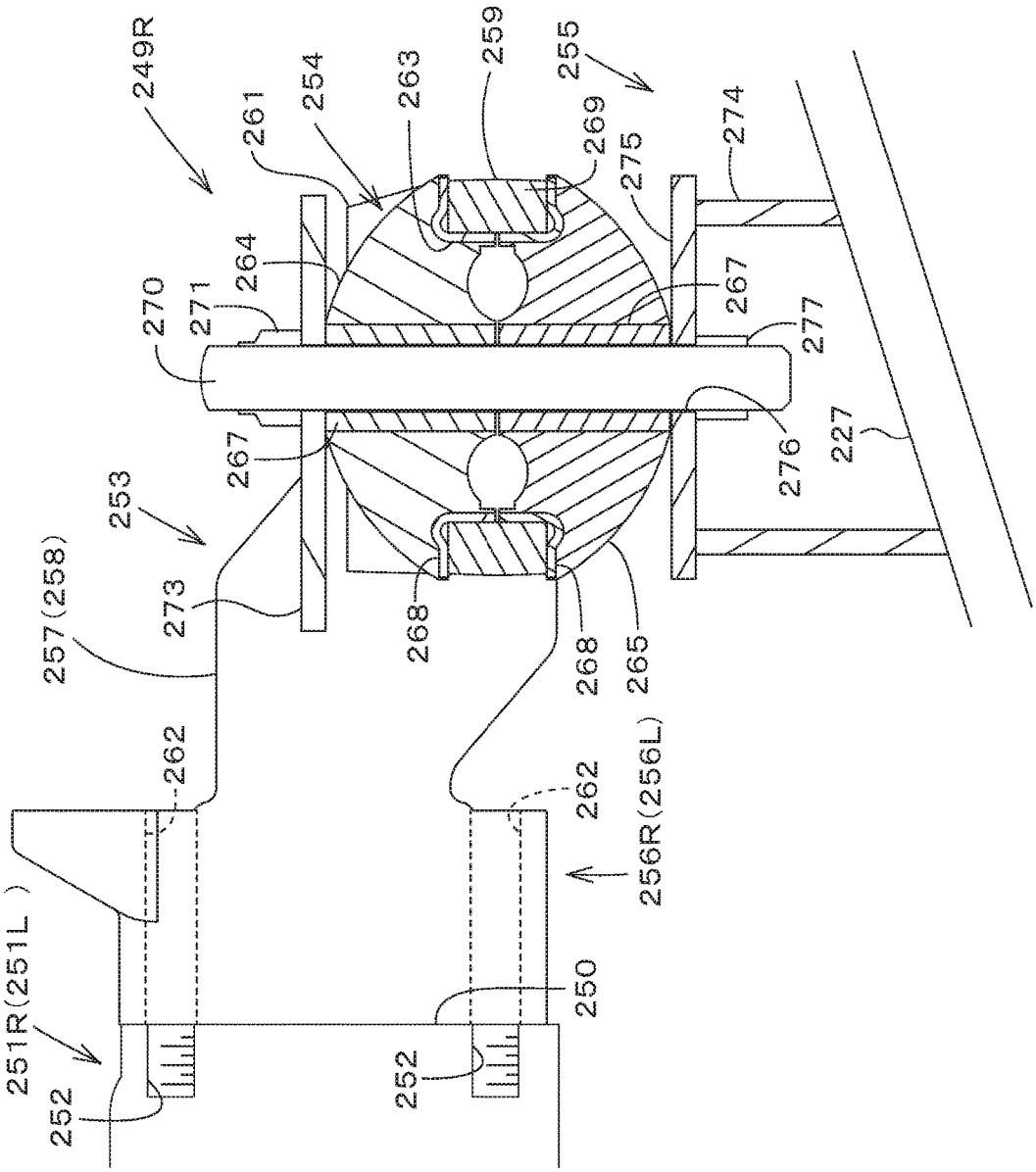
249R
261
254
263
259
255
269
275
274
264
270
271
267
277
227
276
267
253
257(258)
273
268
268
265
262
262
256R(256L)
251R(251L)
250
252
252

Fig.8

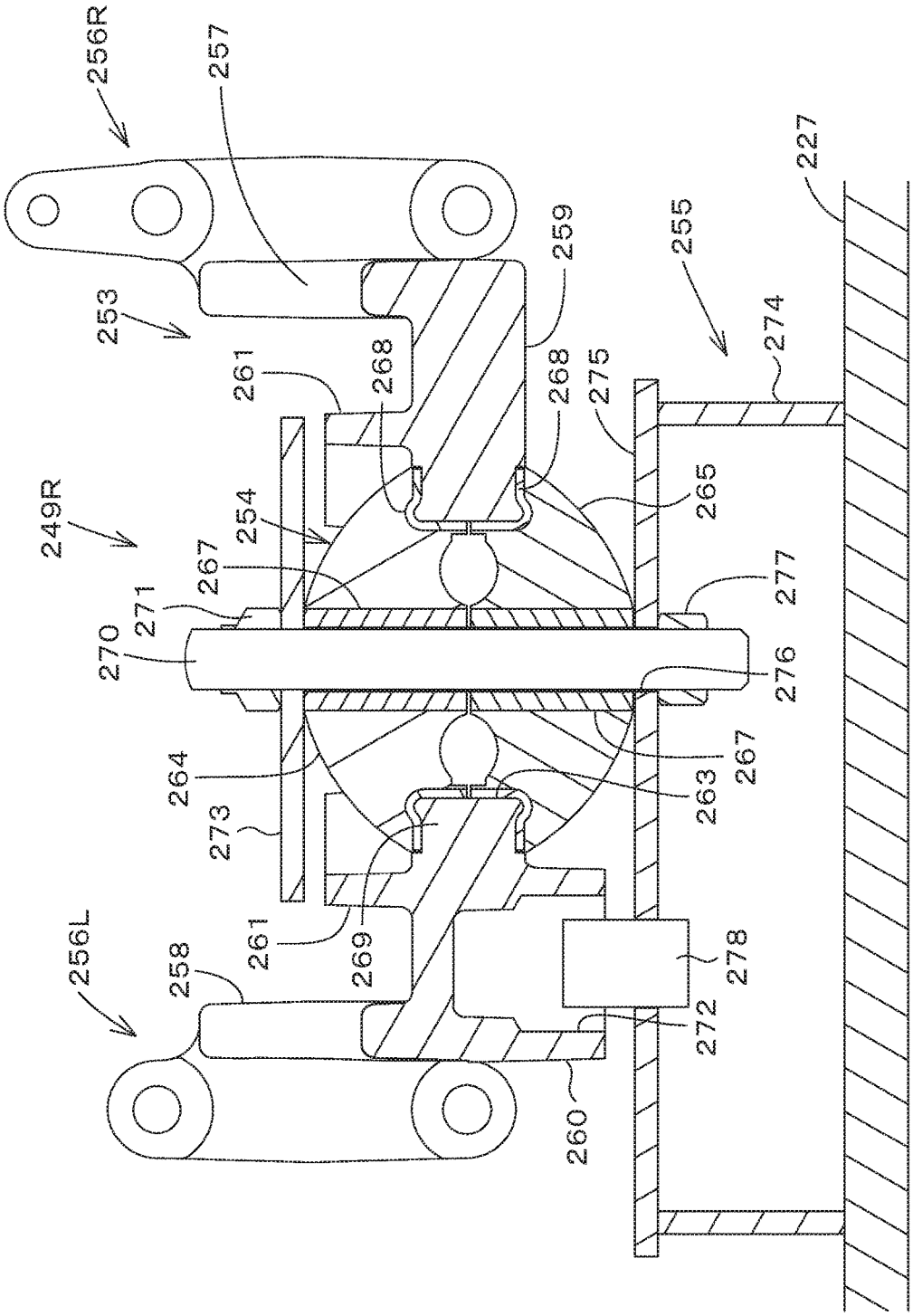
256R
257
227
259
255
253
274
261
268
268
275
265
249R
254
267
277
271
270
276
264
267
263
273
261
269
278
256L
258
272
260

Fig.9

Fig.10

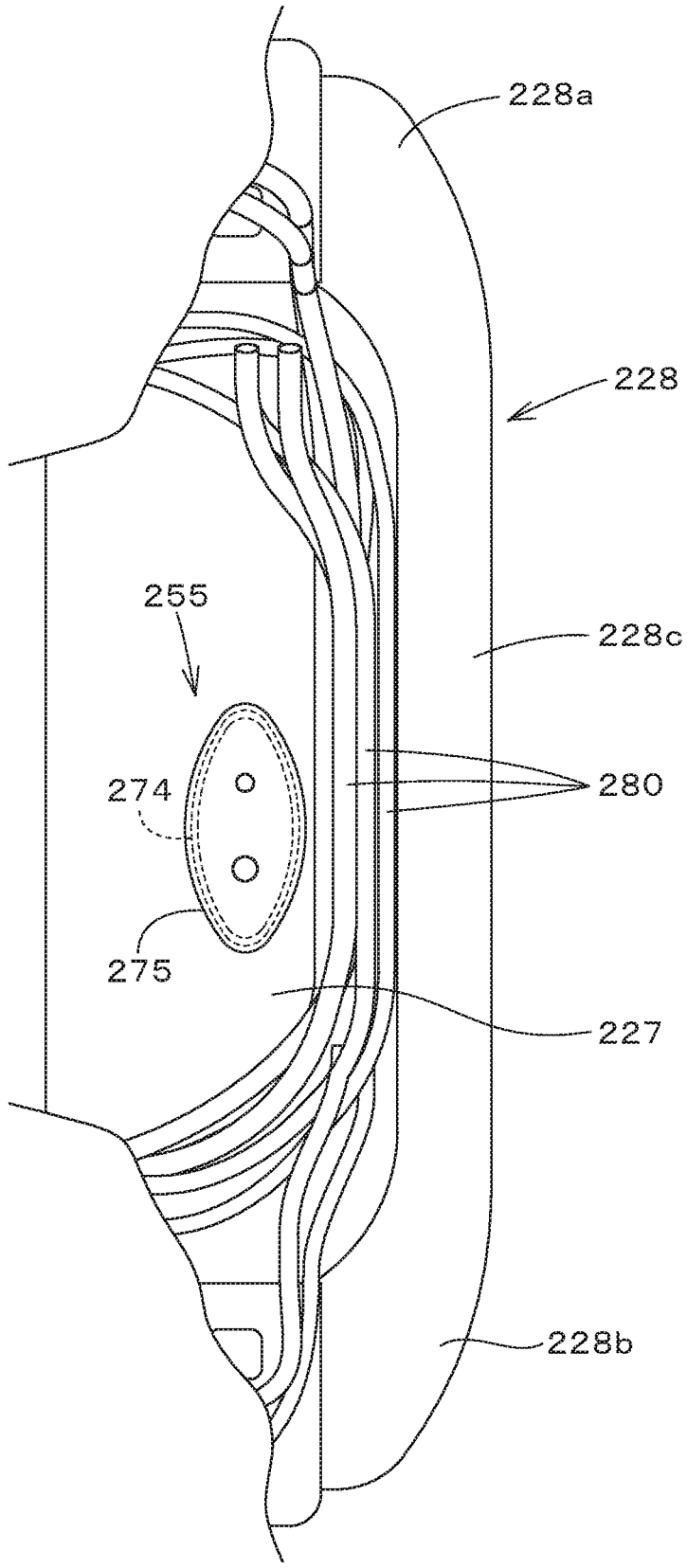

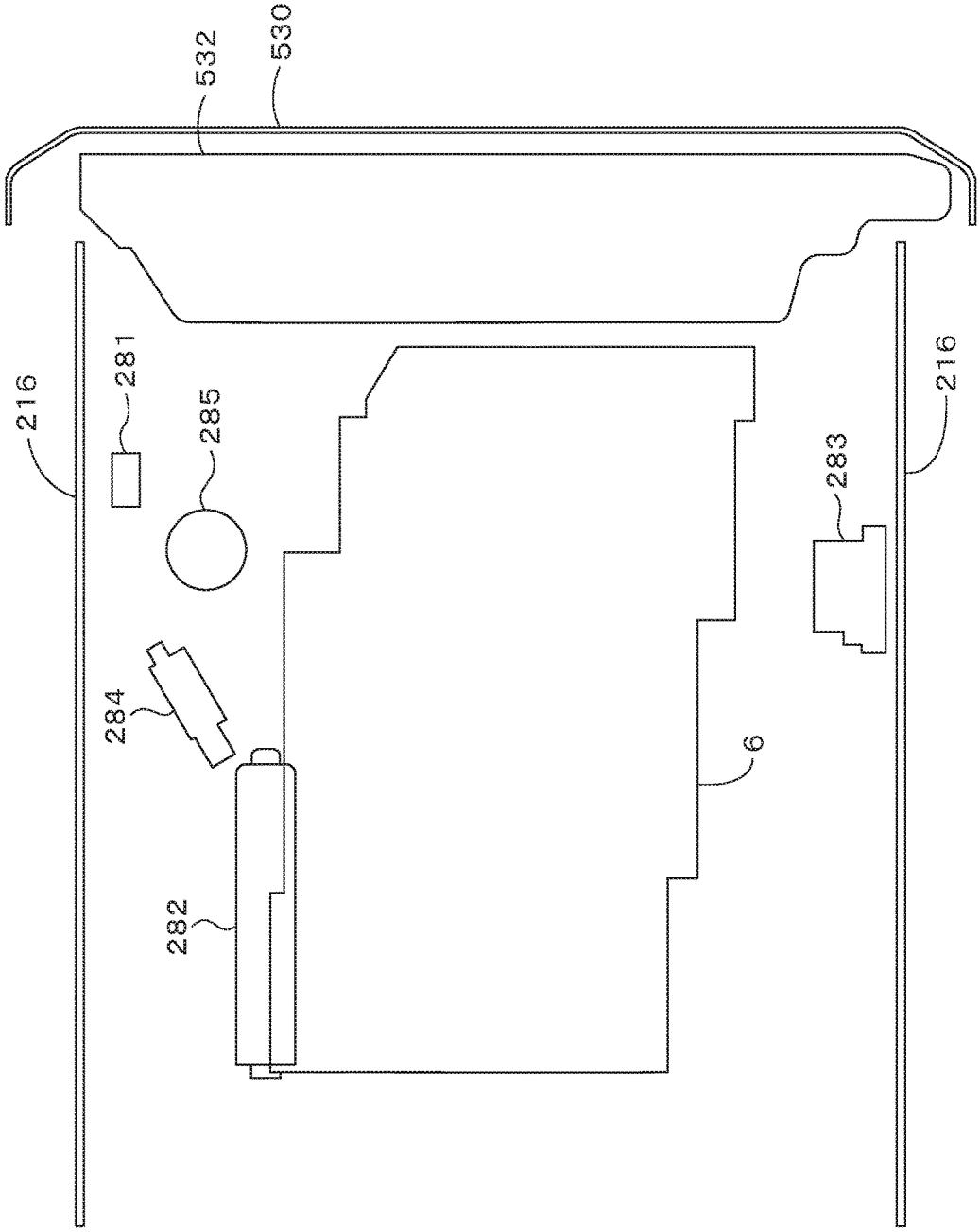

Fig.11

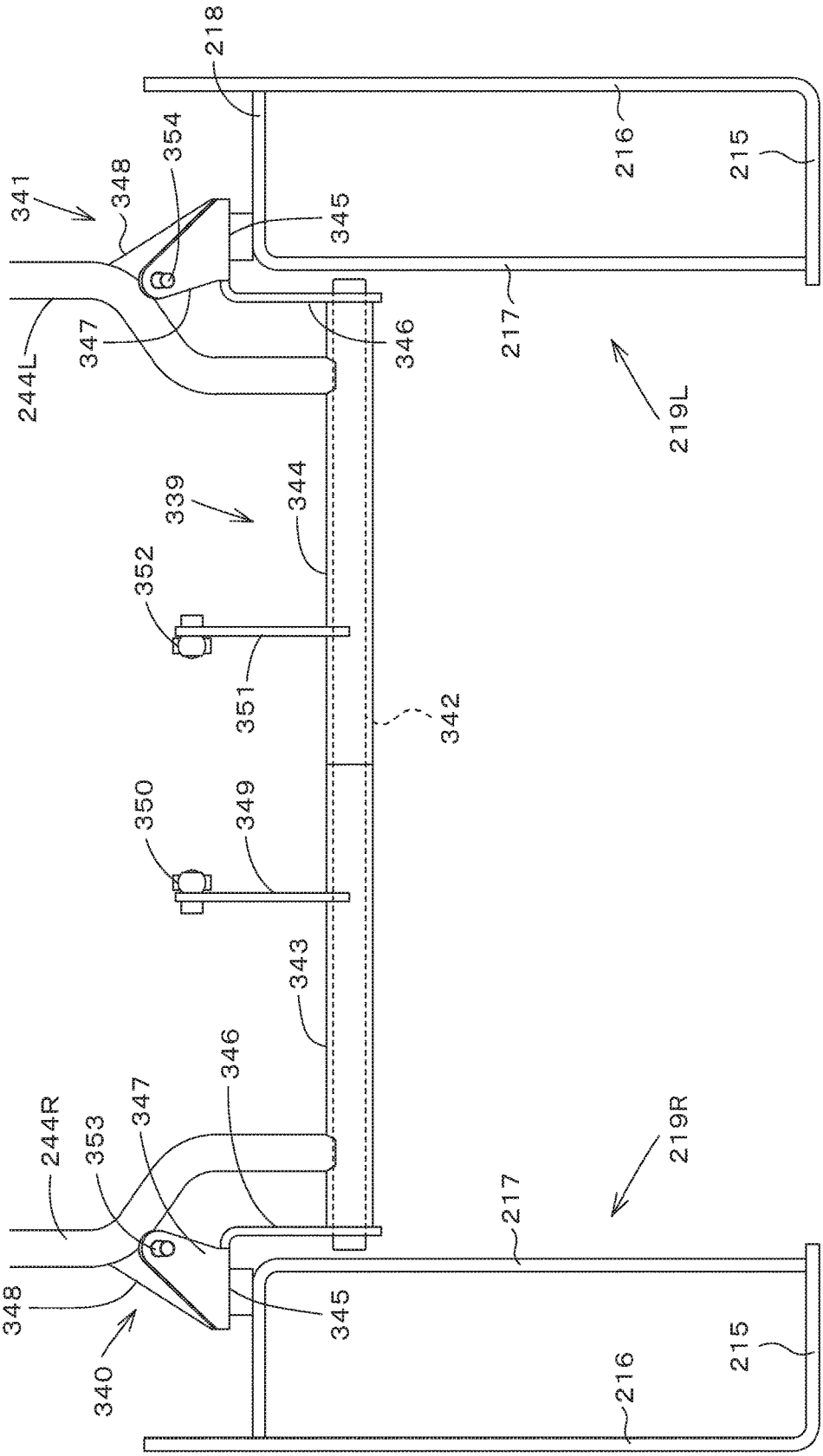
218
216
215
354
348
341
345
244L
347
346
217
219L
339
344
352
351
342
350
349
343
346
244R
353
347
219R
217
348
345
340
216
215

Fig.12

Fig.13

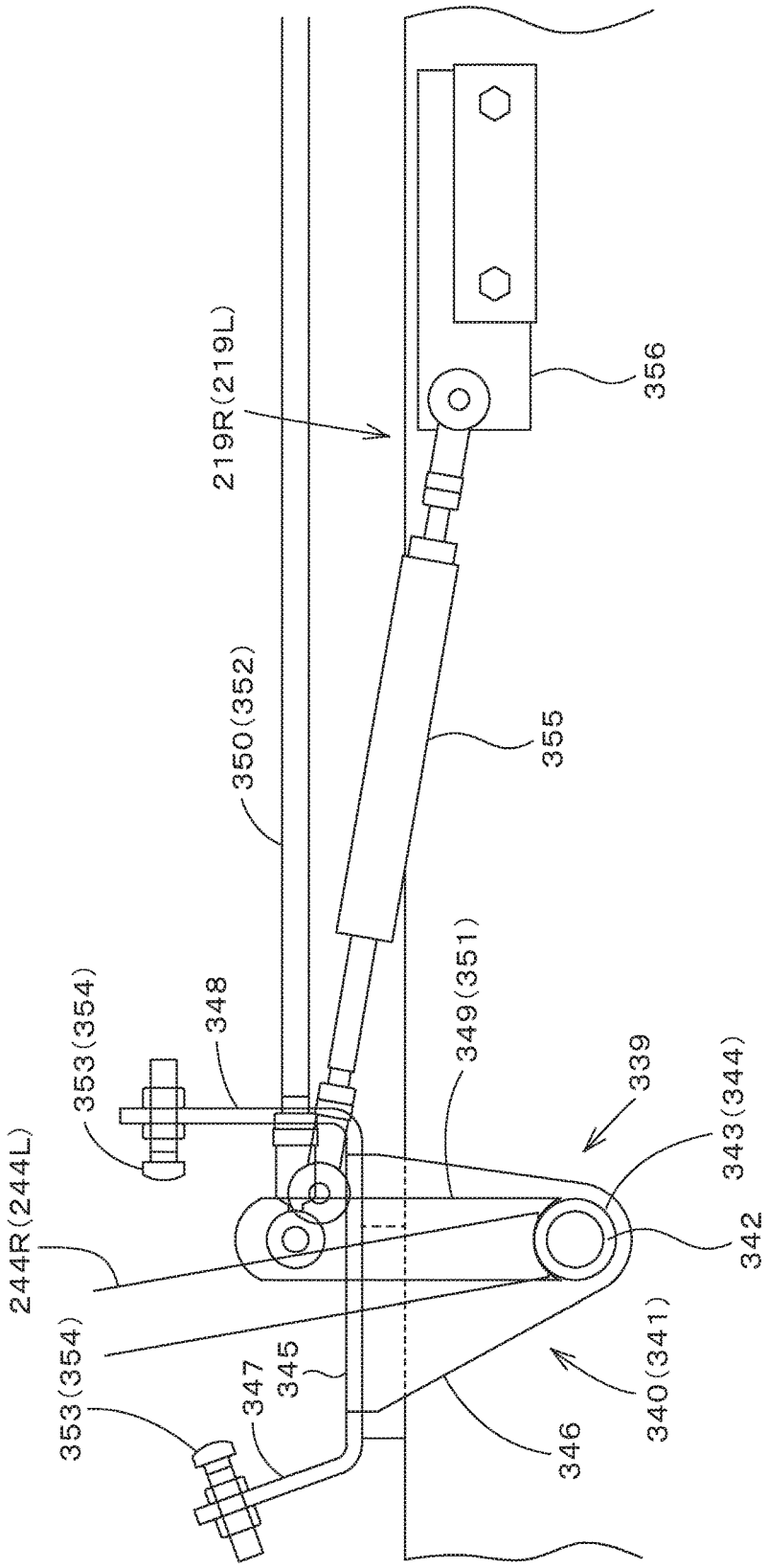
219R(219L)
350(352)
356
355
353(354)
348
349(351)
339
343(344)
244R(244L)
342
353(354)
347
345
340(341)
346

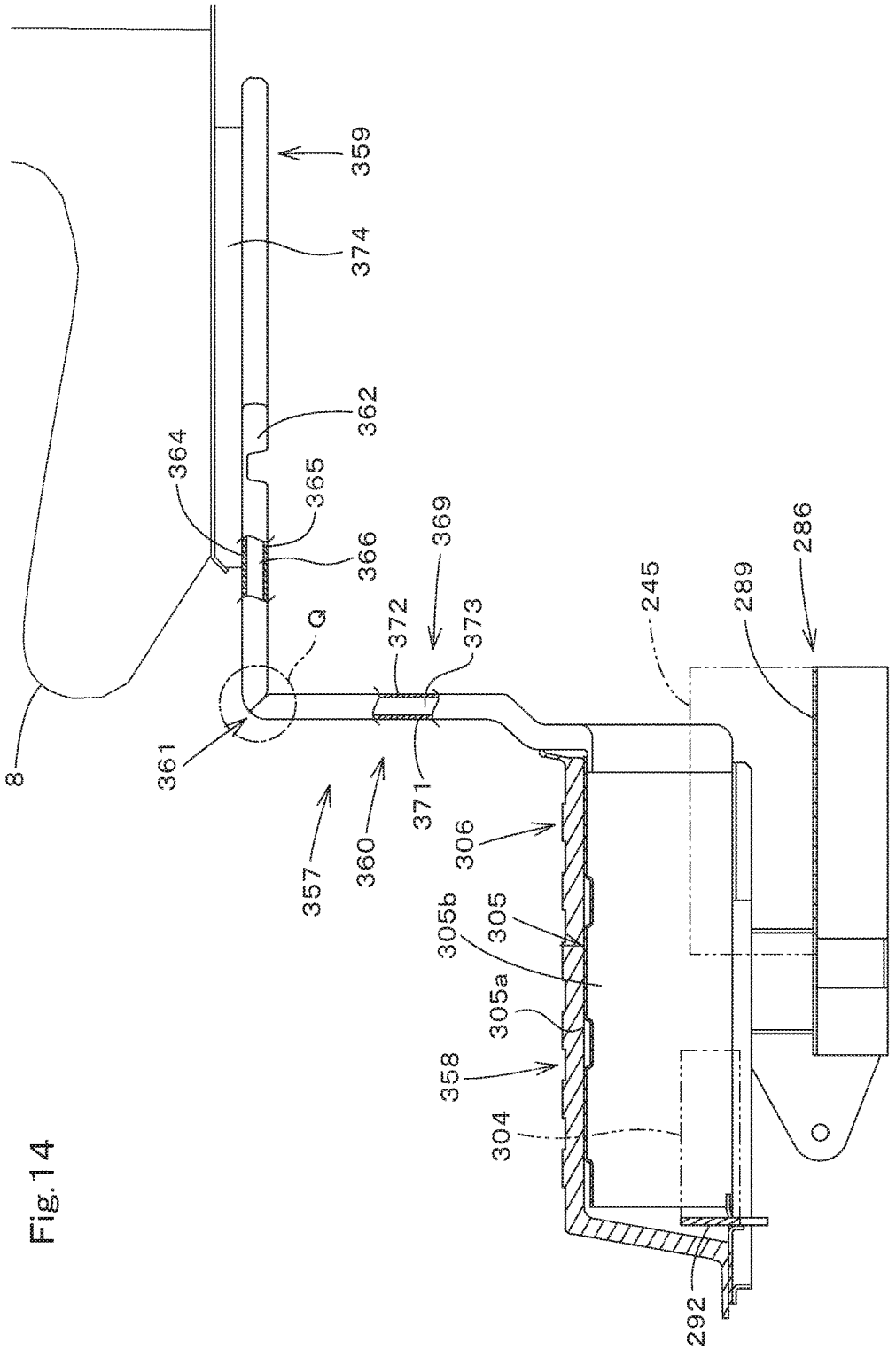
359
374
362
364
365
366
369
Q
372
373
8
361
371
357
360
306
305b
305
305a
358
304
245
289
286
292

Fig.14

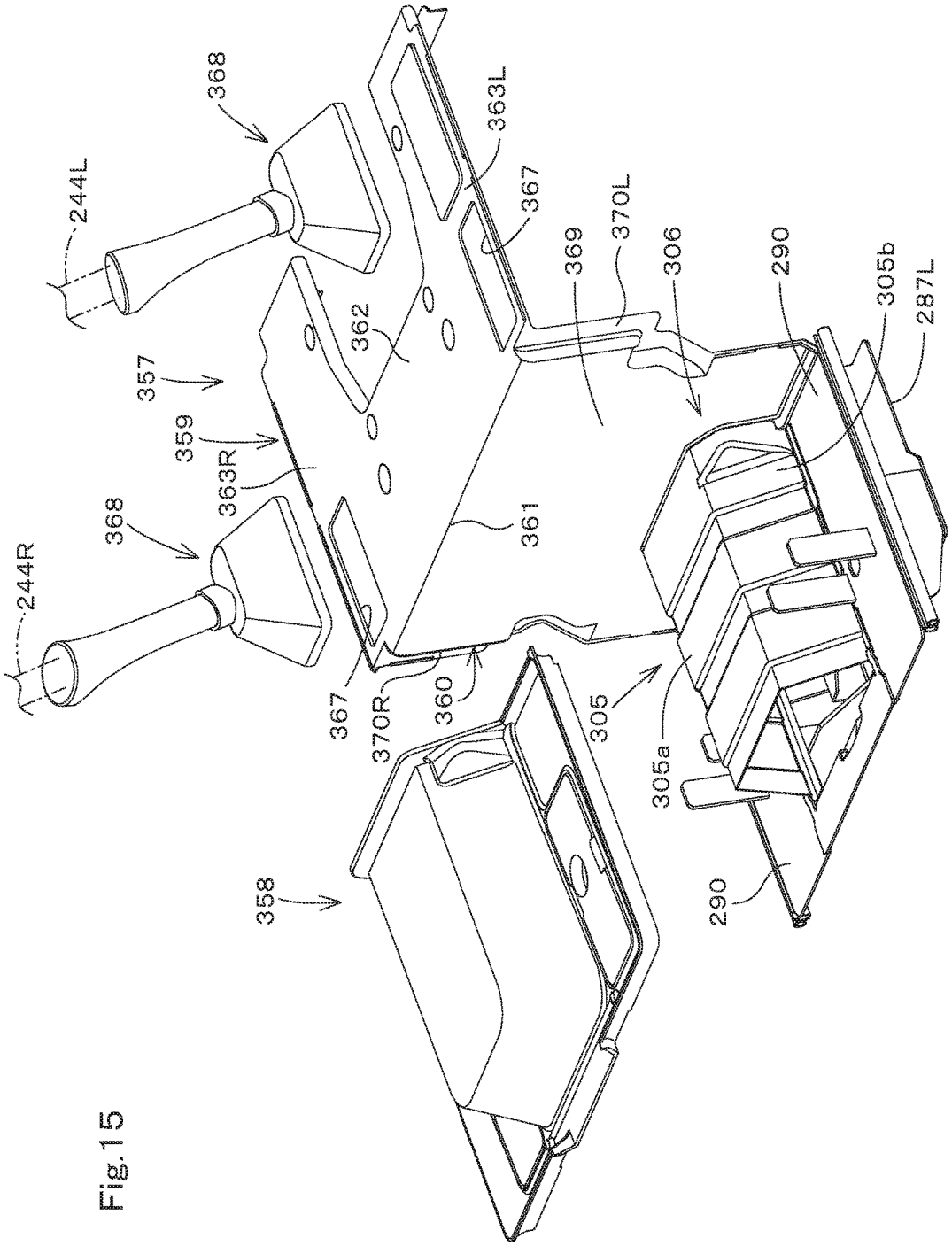
368
244L
363L
367
370L
369
306
290
305b
287L
362
357
359
363R
368
244R
361
367
370R
360
305
305a
358
290

Fig.15

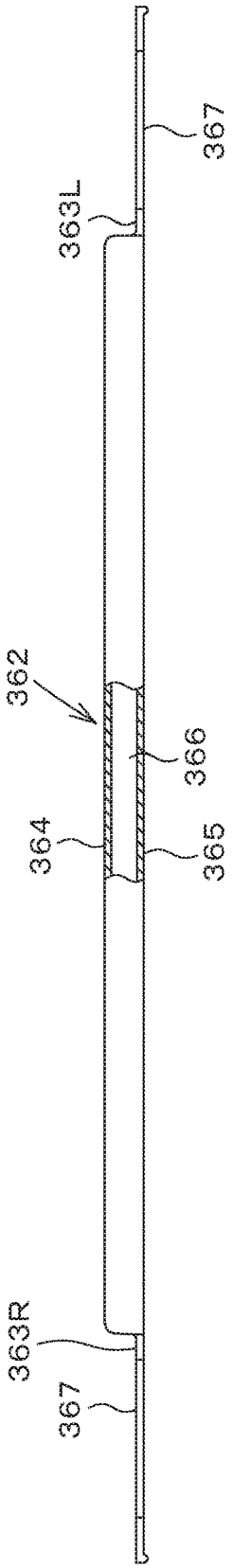

Fig.16

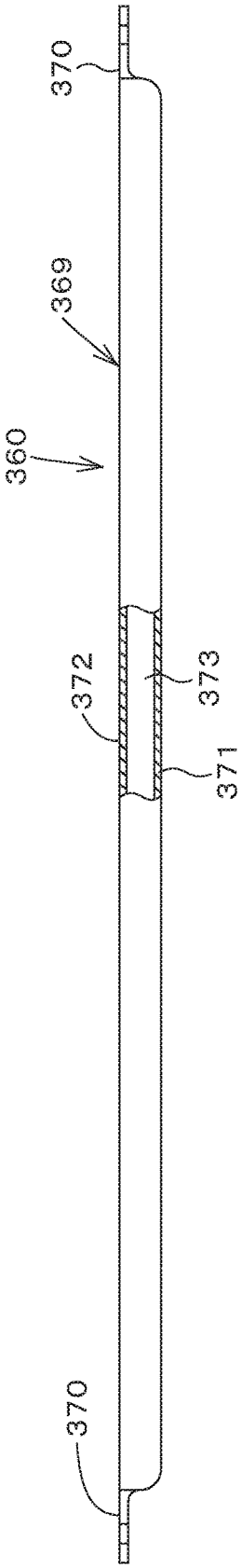

Fig.17

Fig.18

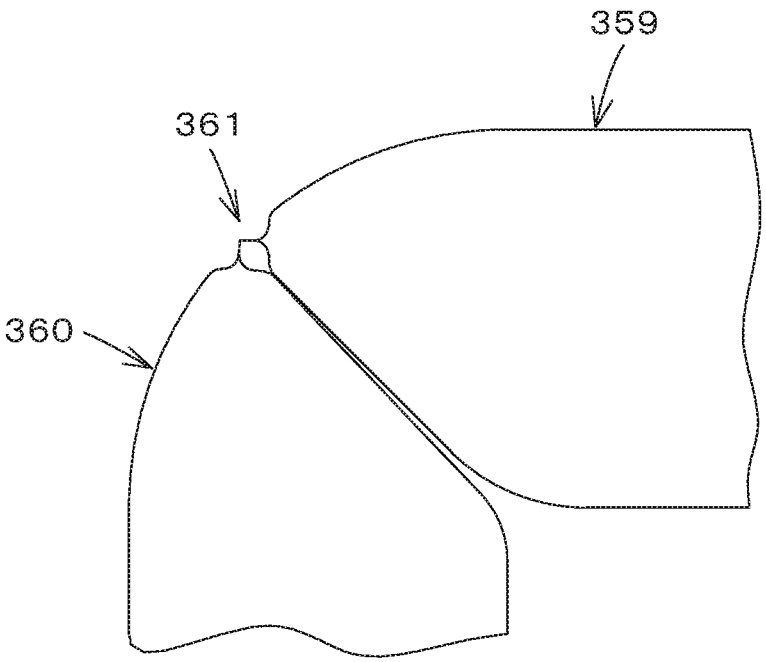

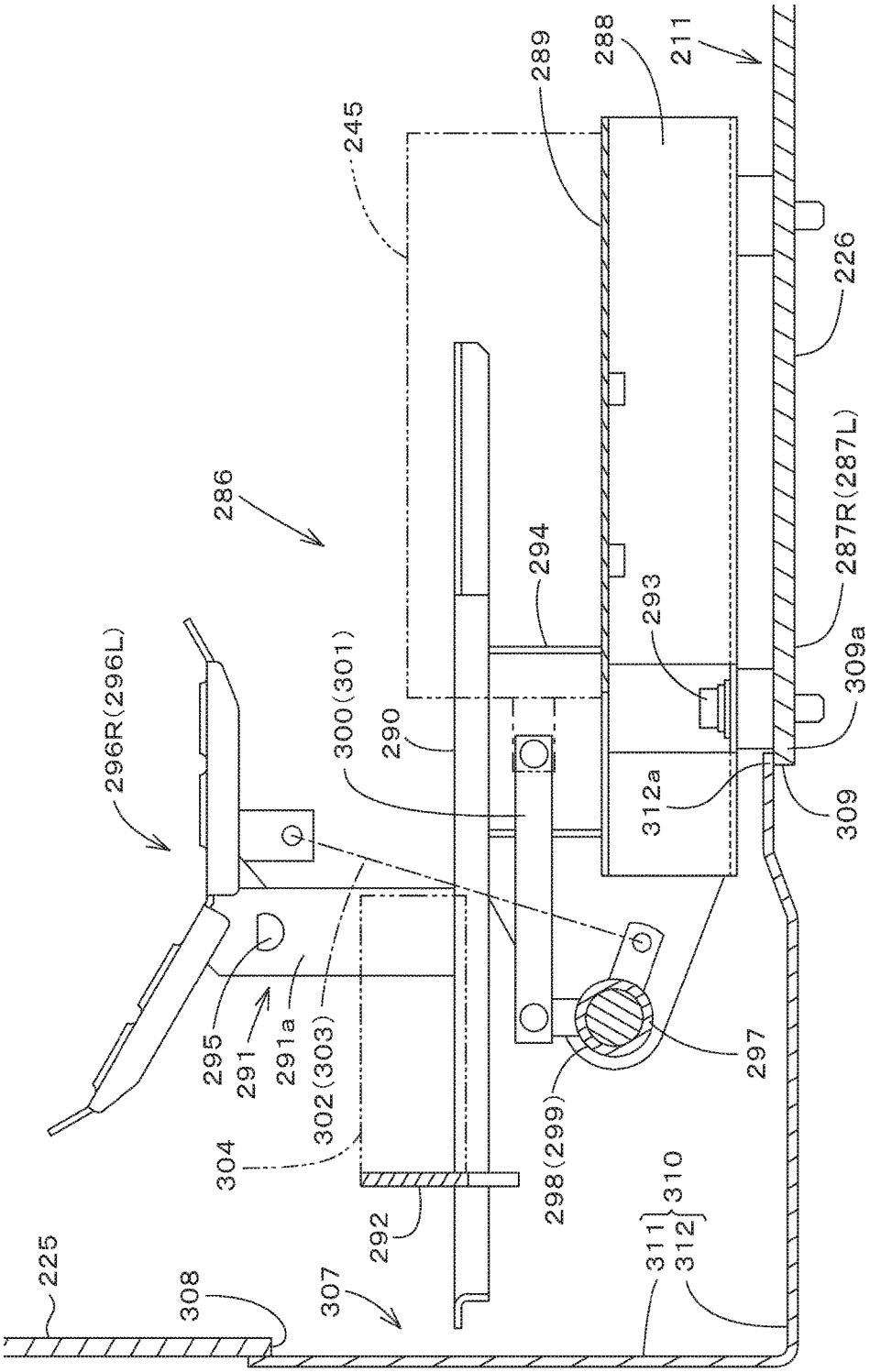
211
288
289
245
226
287R(287L)
309a
309
286
294
293
312a
296R(296L)
300(301)
290
295
291
291a
302(303)
304
297
298(299)
292
310
311
312
225
308
307

Fig.19

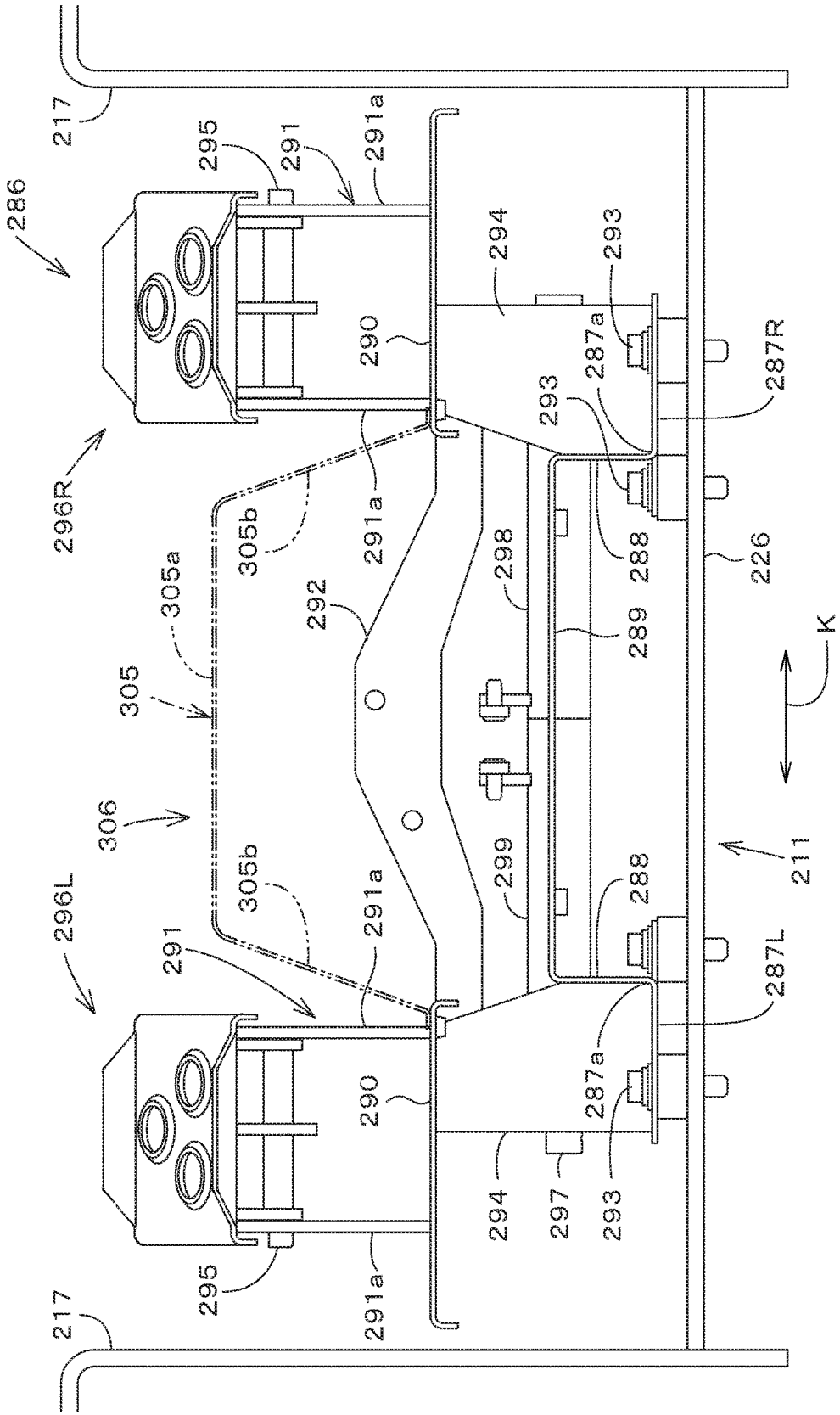
217
286
295
291
291a
294
293
290
287a
287R
296R
305b
291a
298
288
226
305a
292
289
K
305
306
299
211
296L
291
291a
287L
290
287a
294
297
293
295
291a
217

Fig.20

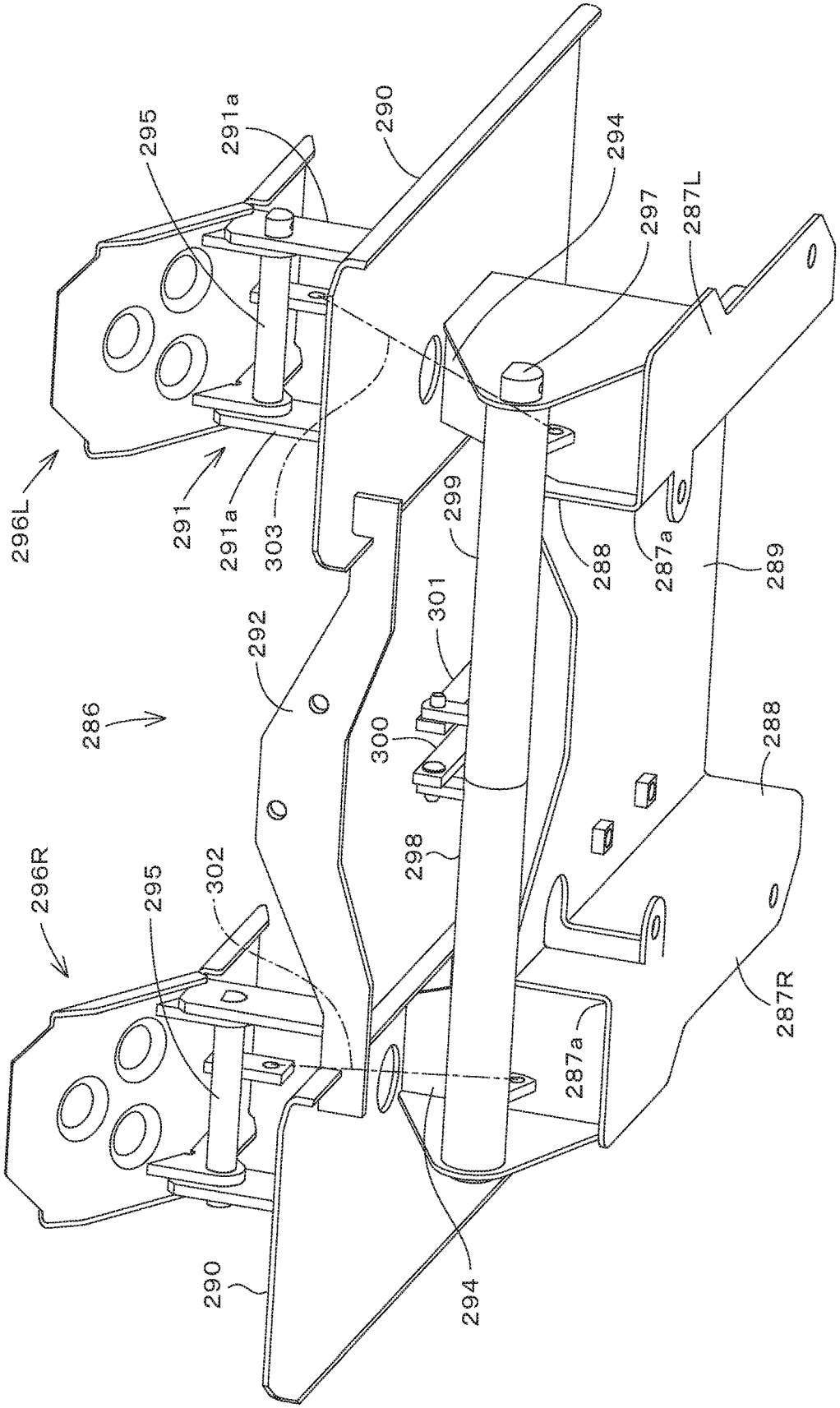
290
291a
295
294
297
287L
296L
291
291a
303
299
288
287a
289
301
292
286
300
288
298
296R
295
302
287R
287a
290
294

Fig.21

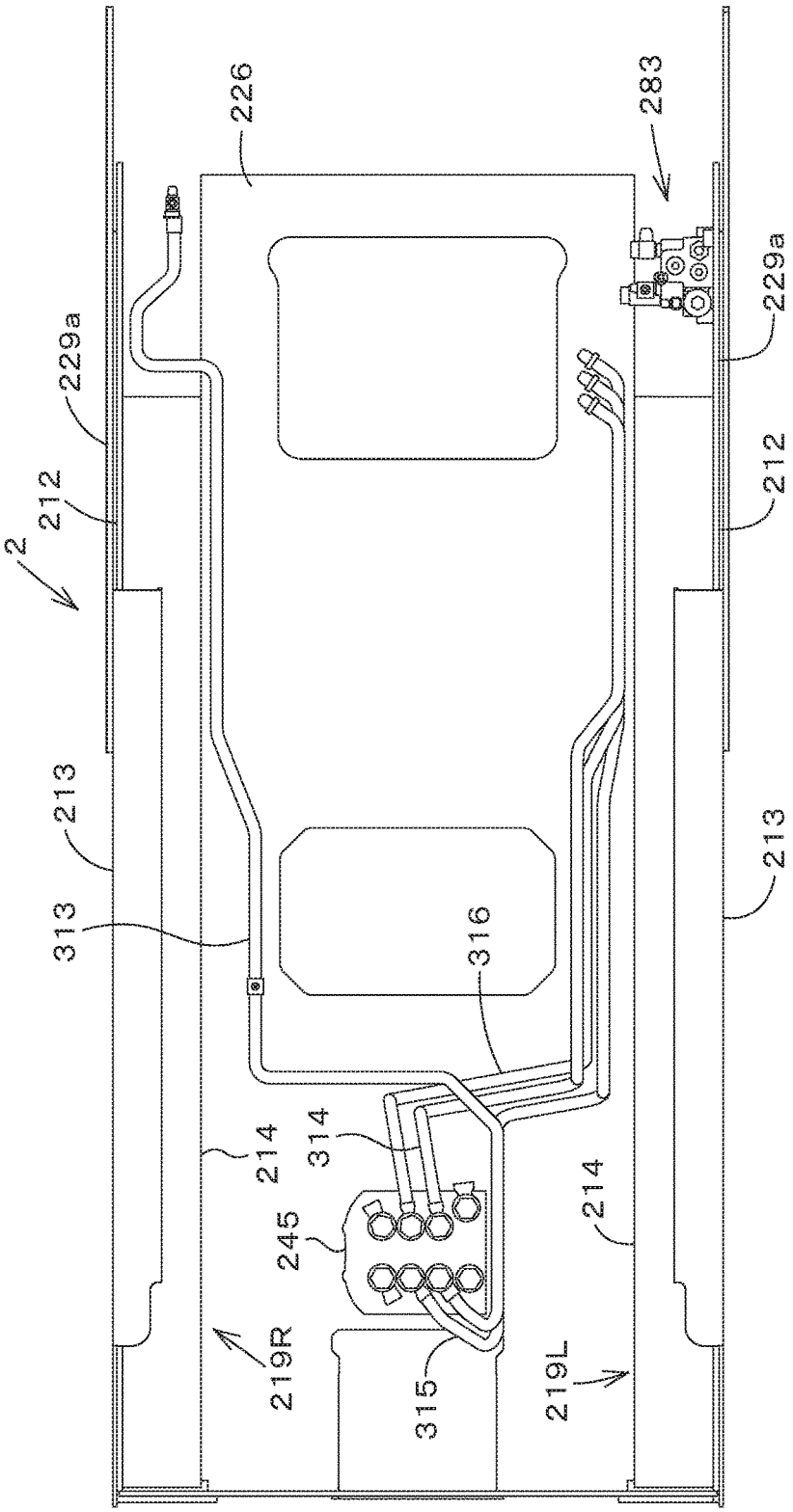
226
283
229a
229a
212
212
2
213
213
313
316
214
314
214
245
219R
315
219L

Fig.22

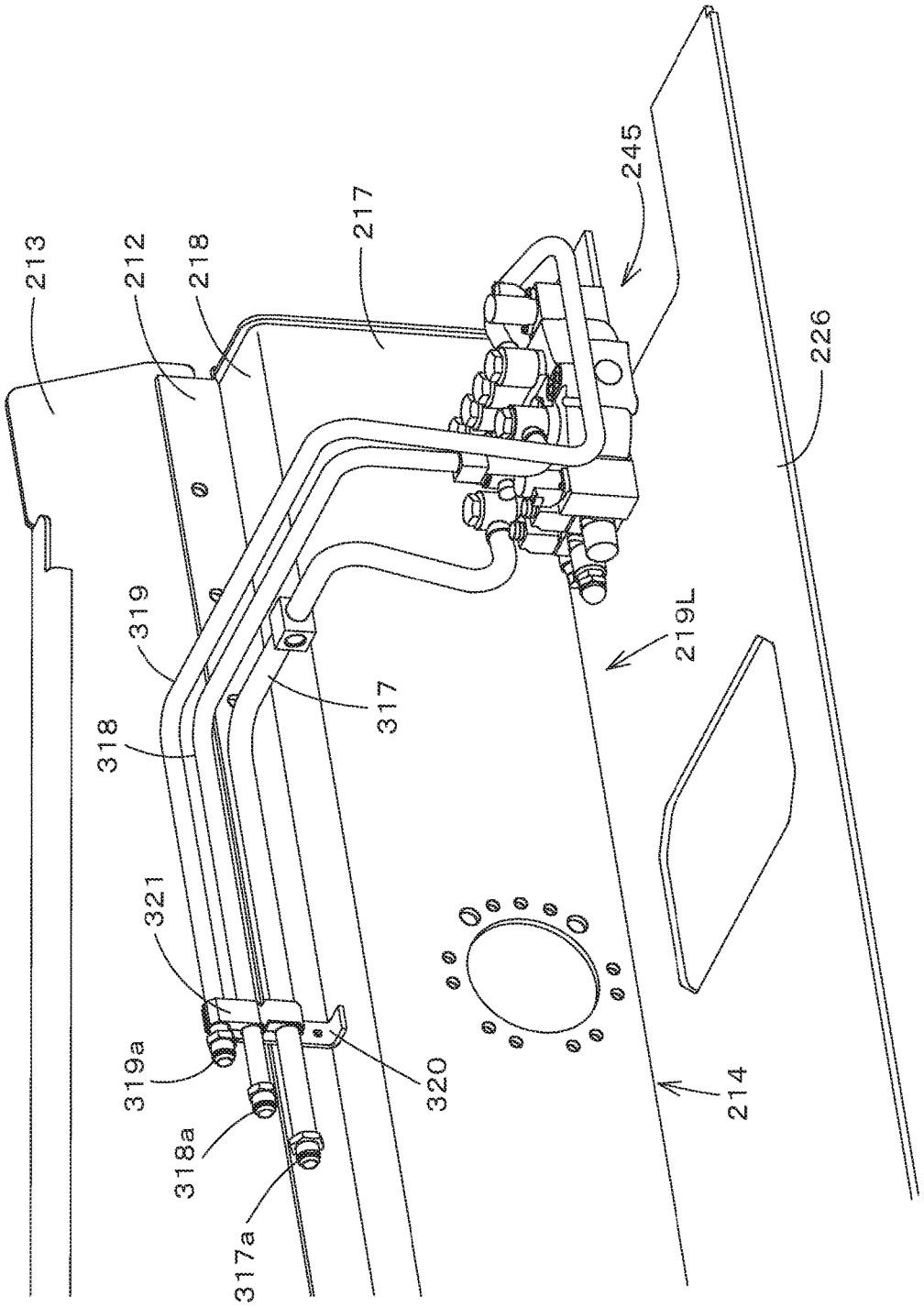
213
212
218
217
245
226
319
318
317
219L
321
319a
318a
317a
320
214

Fig.23

Fig.24

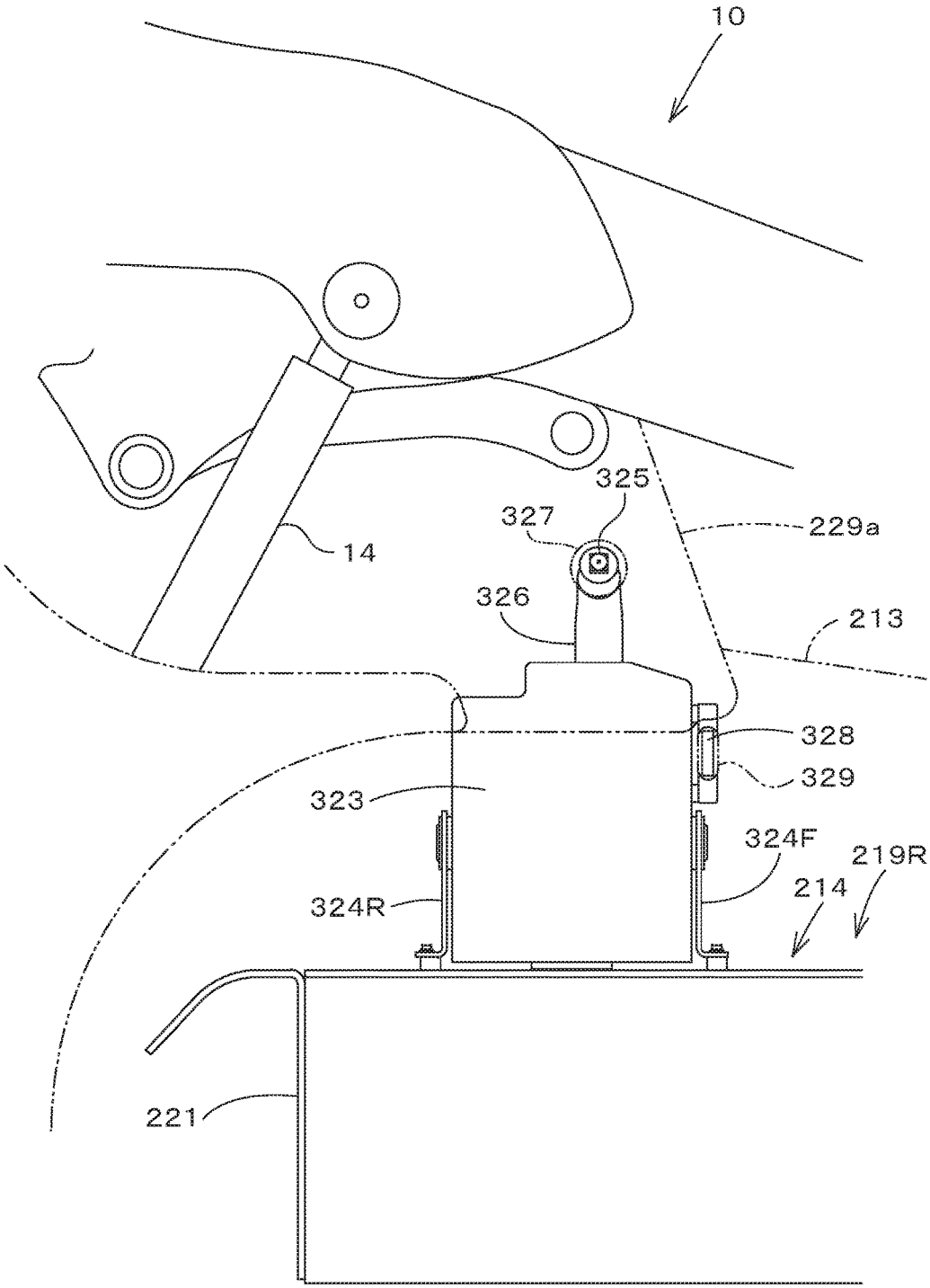

Fig.25

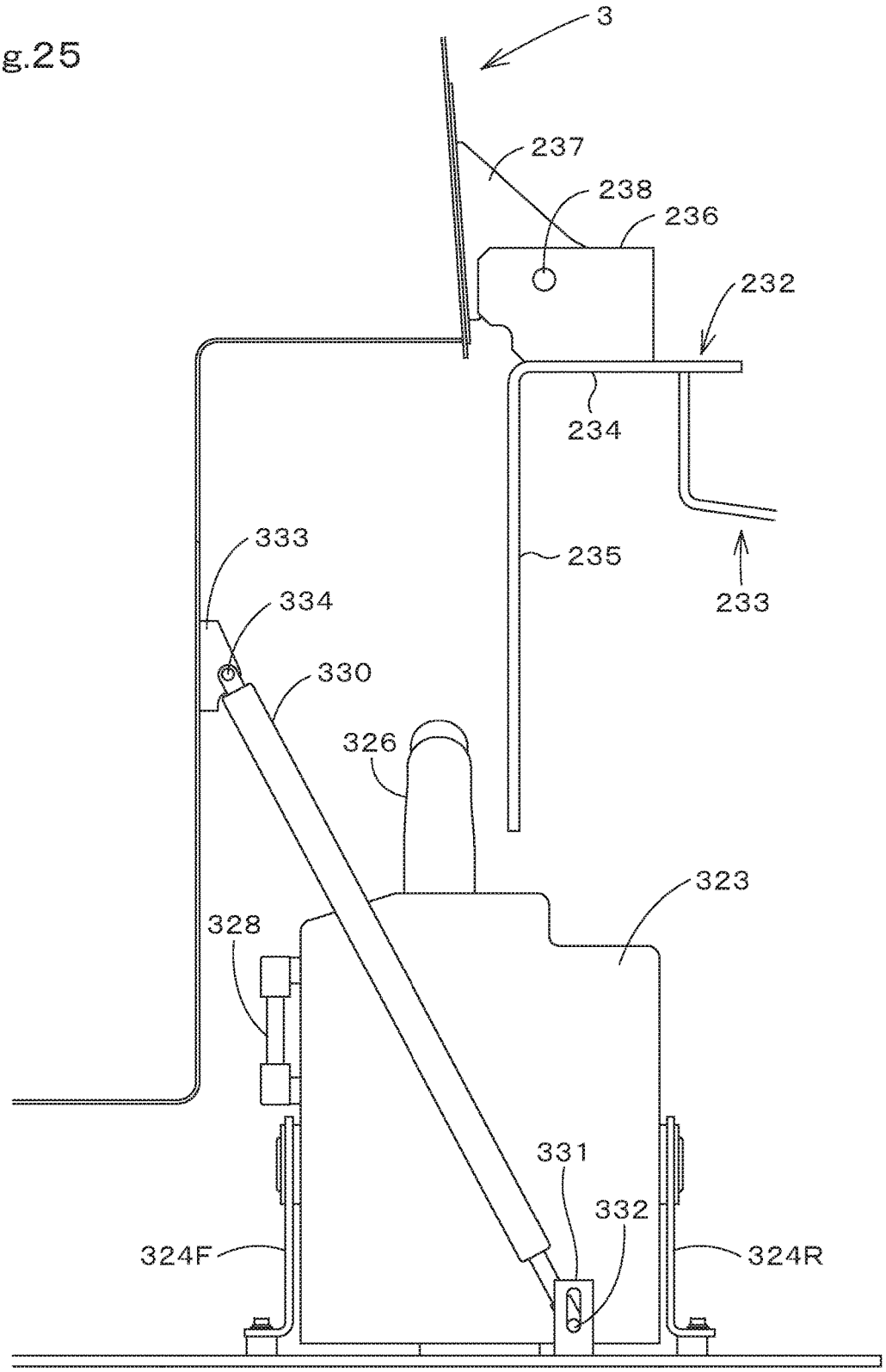
3
237
238
236
232
234
235
233
333
334
330
326
323
328
331
332
324F
324R

Fig.26

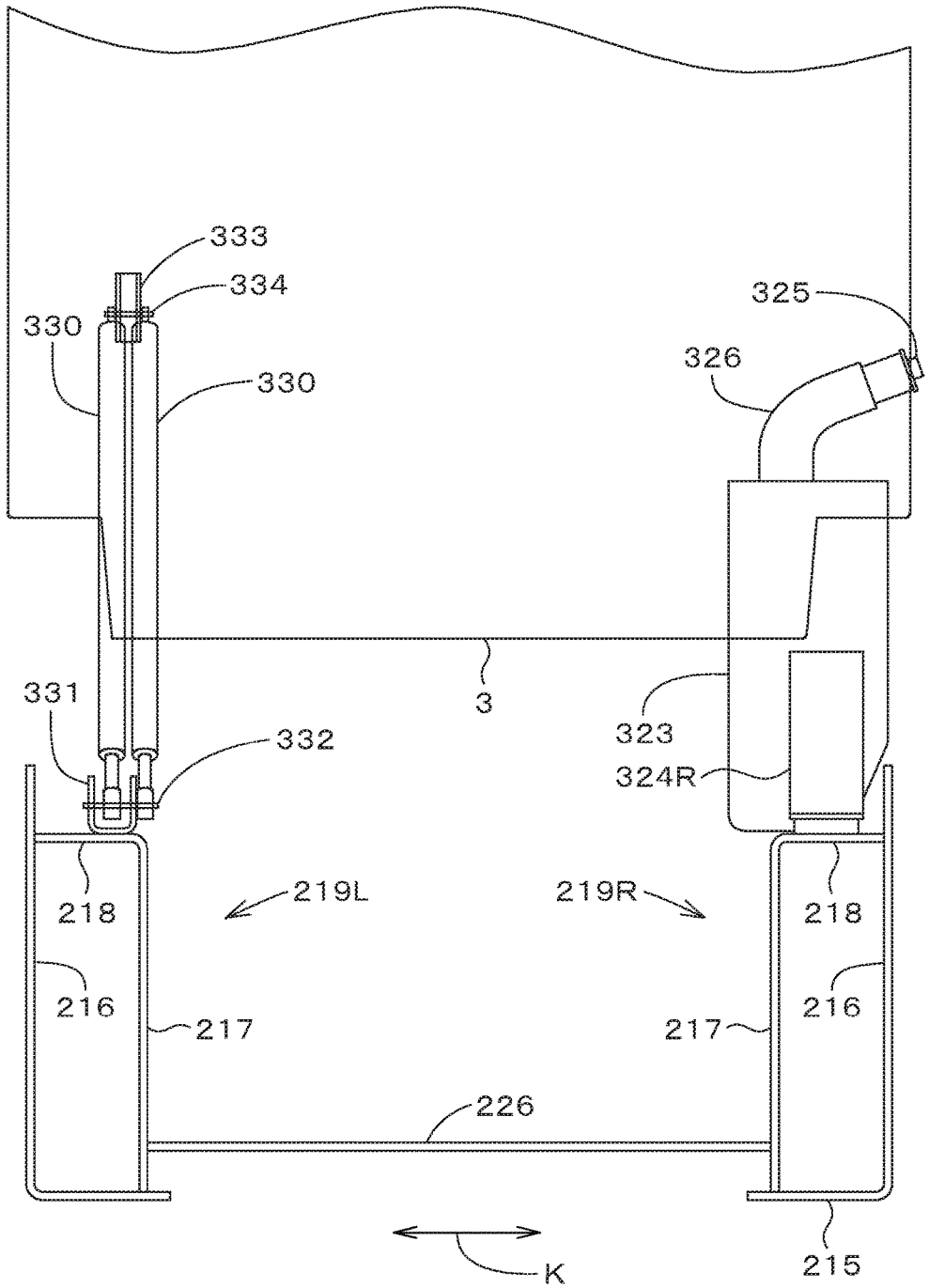
333
334
330
330
325
326
3
331
332
323
324R
218
219L
219R
218
216
217
217
216
226
K
215

Fig.27

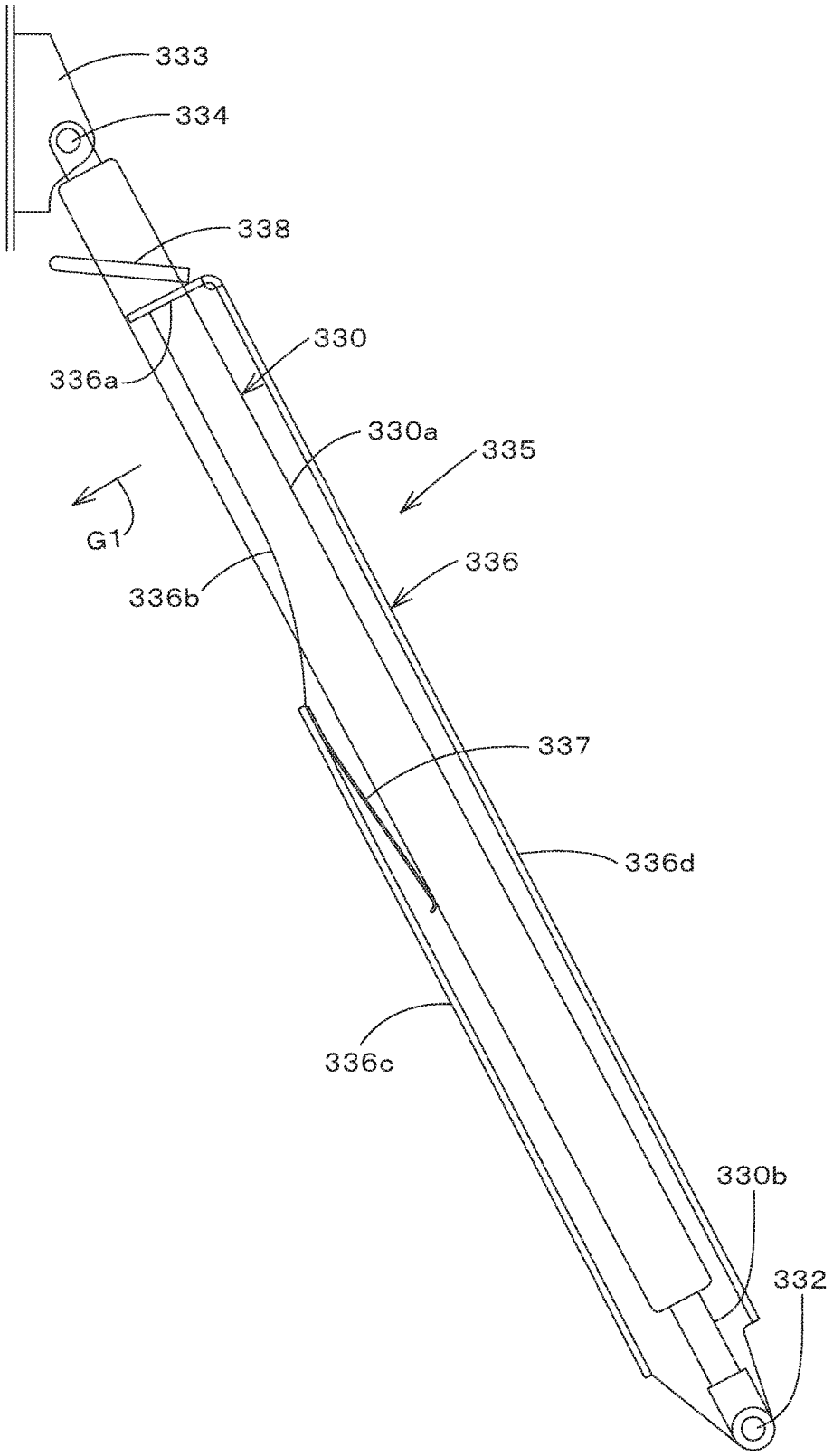
333
334
338
330
336a
330a
335
G1
336
336b
337
336d
336c
330b
332

Fig.28

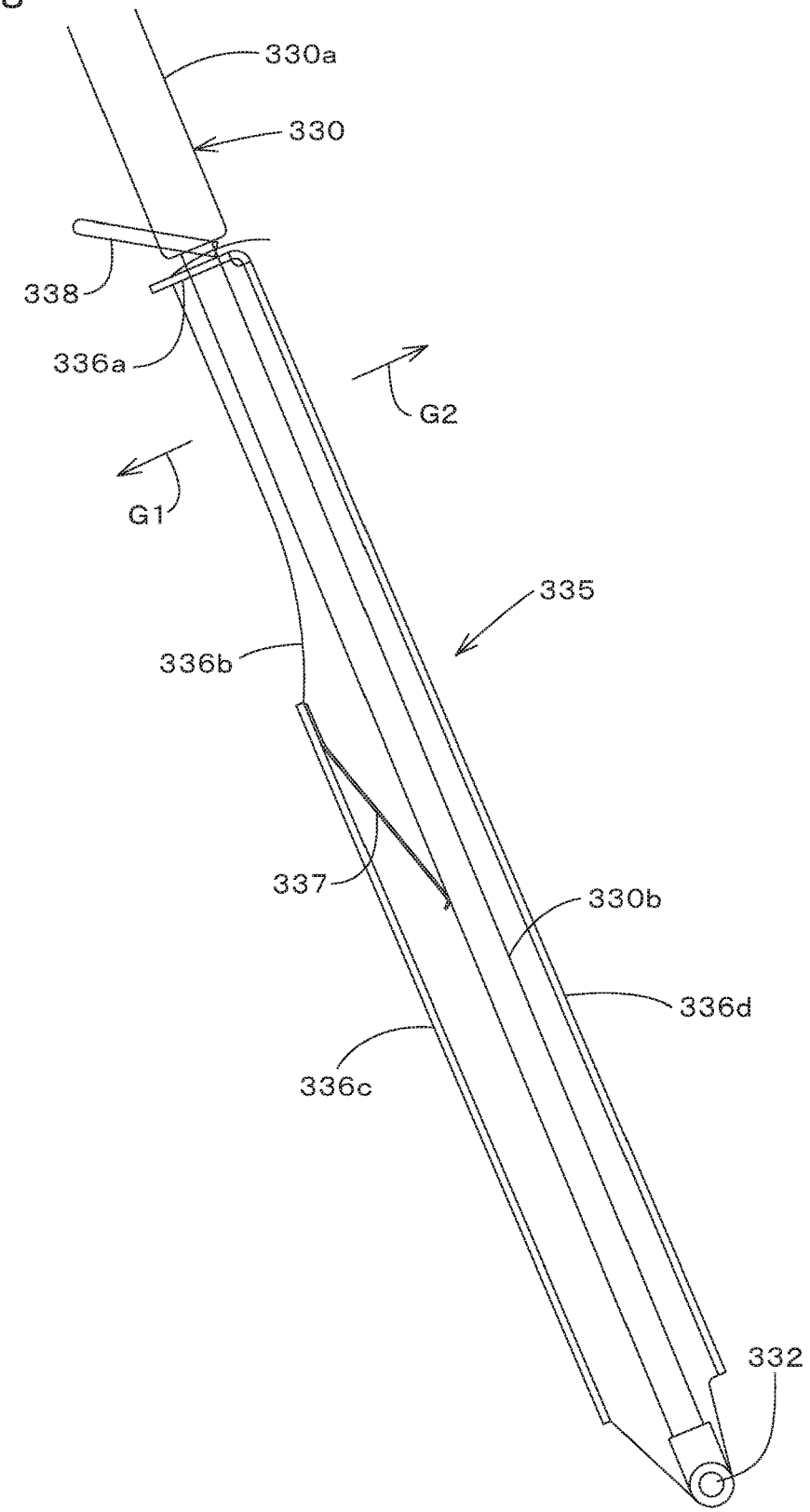

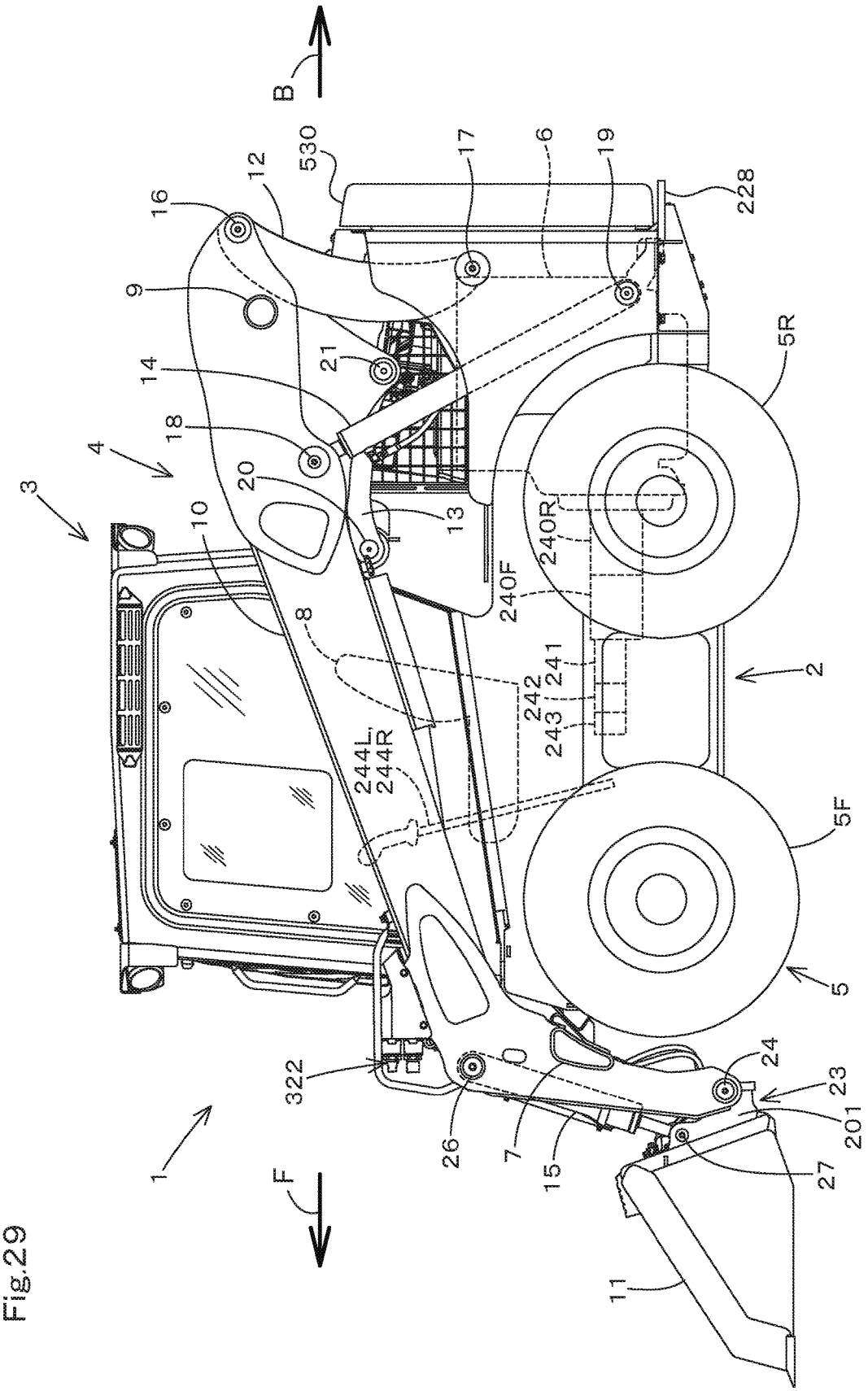
B
530
12
16
17
6
19
228
9
21
14
18
4
3
20
13
10
5R
240R
240F
8
241
242
243
2
244L
244R
5F
5
322
24
23
201
26
7
15
27
1
F
11

Fig.29

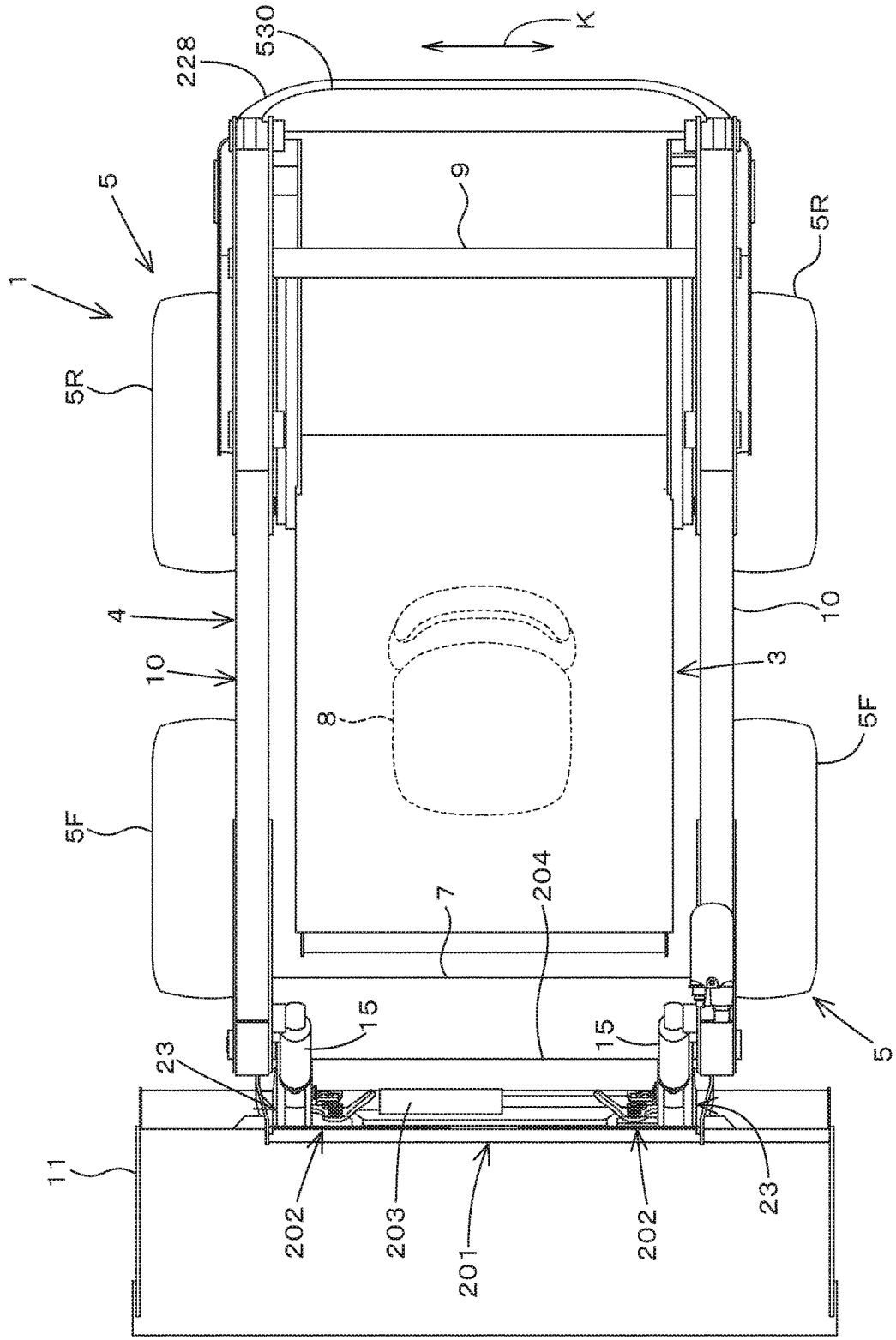
K
530
228
9
5
1
5R
5R
4
10
10
3
8
5F
5F
7
204
15
15
23
23
5
11
202
203
201
202

Fig.30

Fig.31

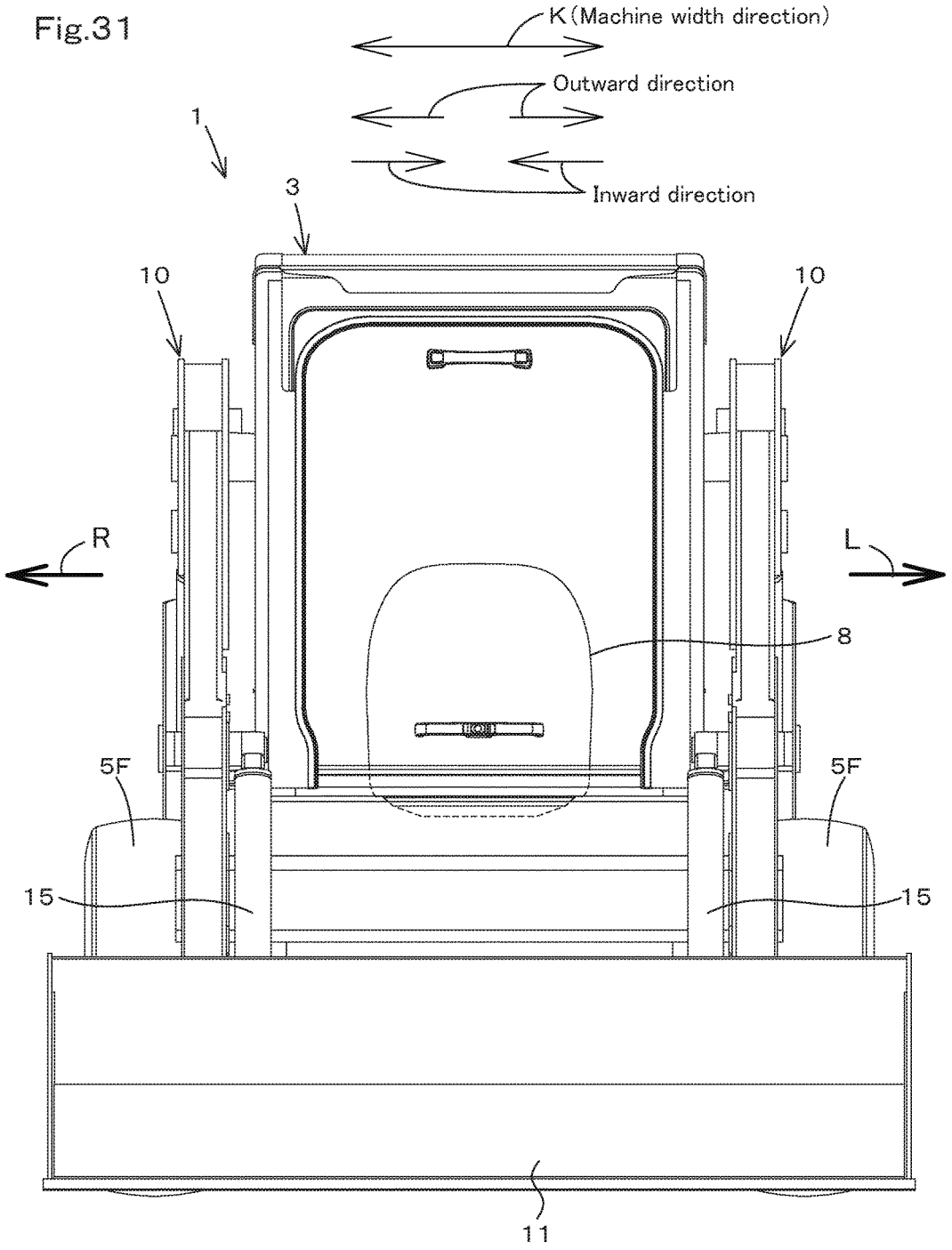
K (Machine width direction)
Outward direction
Inward direction
1
3
10
10
R
L
8
5F
5F
15
15
11

WORKING MACHINE

CROSS-REFERENCE TO RELATED APPLICATIONS

The present application is a continuation of U.S. application Ser. No. 15/264,138 filed on Sep. 13, 2016, which is a continuation of U.S. application Ser. No. 14/862,441 filed on Sep. 23, 2015, which claims priority under 35 U.S.C. § 119 to Japanese Patent Application No. 2014-202384, filed Sep. 30, 2014, to Japanese Patent Application No. 2014-202383, filed Sep. 30, 2014, to Japanese Patent Application No. 2014-202389, filed Sep. 30, 2014, and to Japanese Patent Application No. 2014-202388, filed Sep. 30, 2014. The entire contents of these applications are incorporated herein by reference in their entireties.

BACKGROUND OF THE INVENTION

Field of the Invention

The present invention relates to a working machine such as a skid steer loader, a track loader, and a compact track loader.

Description of Related Art

Working machines disclosed in Japanese Unexamined Patent Application Publication No. 2010-65437 and Japanese Patent Publication No. 5541709 are previously known.

The working machine disclosed in Japanese Unexamined Patent Application Publication No. 2010-65437 includes: a machine body; an engine mounted on the machine body; an output shaft protruding from a rear portion of the engine; and a mount member for supporting the engine to suppress vibration of the engine.

The mount member includes a first support member, an elastic member, and a second support member. The first support member is constituted of a first arm disposed on a right side (a right arm), a second arm disposed on a left side (a left arm), and an attachment member attached to both of the first arm and the second arm. The first arm, the second arm, and the attachment member are each formed of a plate member. The first arm is fixed by bolts to a right side surface of a rear portion of a crankcase of the engine. The second arm is fixed by bolts to a left side surface of a left portion of the crankcase of the engine. The first arm and the second arm protrude backward from the engine. The attachment member is fixed by bolts to the right arm and the left arm, the right arm and the left arm protruding backward from the engine. The elastic member is formed of rubber, and is disposed on the attachment member, the attachment member being included in the first support member. The second support member is disposed on the machine body to support the elastic member.

The working machine disclosed in Japanese Patent Publication No. 5541709 includes mount members, one of the mount members being disposed on a right side of a rear portion of an engine, the other one of the mount members being disposed on a left side of the rear portion of the engine. The mount member disposed on the right side includes a first support member, an elastic member, and a second support member. The mount member disposed on the left side also includes a first support member, an elastic member, and a second support member. The first supports members each include an attachment plate, an arm, and a support plate. The attachment plate is fixed by bolts to a side surface of a crankcase. The arm protrudes sideward (sideways) from the attachment plate. The support plate is fixed to the attachment plate and the arm. The elastic member is attached to the support plate.

A working machine disclosed in Japanese Unexamined Patent Application Publication No. 2012-207531 is previously known. The working machine includes a machine body, a travel device disposed on a right side of the machine body, a travel device disposed on a left side of the machine body, an operator seat mounted on the machine body, an operation lever disposed on a right side of the operator seat, and an operation lever disposed on a left side of the operator seat.

A working machine disclosed in Japanese Unexamined Patent Application Publication No. 2012-207531 is previously known. The working machine includes a machine body, an actuator, and a control valve configured to control a hydraulic operation fluid (a hydraulic oil), the hydraulic operation fluid being used for actuating the actuator. In addition, the working machine includes an operator seat mounted on the machine body. The control valve is disposed in rear of the operator seat.

A working machine disclosed in Japanese Unexamined Patent Application Publication No. 2012-207531 is previously known. The working machine includes a machine body, and a travel device disposed outside the machine body. In addition, the working machine has a hydraulic operation fluid tank storing a hydraulic operation fluid, the hydraulic operation fluid being used for actuating a hydraulic actuator installed to the working machine. The hydraulic operation fluid tank is placed on a bottom portion of an inside of the machine body.

The previously-known working machine does not include a transmission case, the transmission case being configured to house a motive power transmission device for transmitting a motive power to the travel device. In addition, the working machine is provided with a cabin mounted on the machine body. The cabin is pivotally supported on the machine body at a rear portion of the cabin, and is capable of being lifted up.

BRIEF SUMMARY OF THE INVENTION

Problems to be Solved by the Invention

In the working machine disclosed in Japanese Unexamined Patent Application Publication No. 2010-65437, the first arm and the second arm are each fixed by bolts to the side surface of a rear portion of the crankcase, the bolts being screwed from the side, and accordingly the working machine is required to have a space on both sides of the rear portion of the crankcase, the space being used for the attachment of the first arm and the second arm. In addition, one of the attachment members is attached to the first arm, the other one of the attachment members is attached to the second arm, and thus both of the first arm and the second arm protrude from the rear portion of the crankcase.

Moreover, in the working machine disclosed in Japanese Patent Publication No. 5541709, the first support member of the mount member disposed on the right side is fixed to the right side surface of the crankcase, and the first support member of the mount member disposed on the left side is fixed to the left side surface of the crankcase. Accordingly the working machine is required to have a space on both sides of the rear portion of the crankcase, the space being used for the attachment of the first support members. In addition, the mount member disposed on the right side is

disposed on the side surface of the rear portion of the crankcase, protruding from the side surface, and the mount member disposed on the left side is disposed on the side surface of the rear portion of the crankcase, protruding from the side surface.

Thus, the working machine previously known has a problem that the mount members interrupt the layout of and the maintenance of parts disposed around the rear portion of the engine.

To solve the above mentioned problems, the present invention intends to provide a working machine capable of improving the layout of and the maintenance of parts disposed around the rear portion of the engine.

In the working machine previously disclosed in Japanese Unexamined Patent Application Publication No. 2012-207531, the operation lever disposed on the right side is attached (installed) separately from the operation lever disposed on the left side, and each of the operation levers has to be continuously supported during the attachment to the attachment member. Accordingly, the attachment of the operation levers takes a long time.

To solve the above mentioned problems, the present invention intends to simplify the attachment of the operation levers, one of the operation levers being disposed on the right side of the operator seat, the other one of the operation levers being disposed on the left side of the operator seat.

In the working machine including pedals at a foot of the operator seat, the pedals being configured to operate the control valve, the control valve is far from the pedals when the control valve is disposed in rear of the operator seat. Accordingly, the working machine requires a long mechanical linkage for connecting the control valve to the pedals, thereby requiring a large space, the large space being used for forming a passage allowing arrangement of the long mechanical linkage. Meanwhile, it is considered to dispose the control valve on a front portion of the machine body at the foot of the operator seat, thereby shortening a distance between the pedals and the control valve. When the control valve is mounted directly on a bottom portion of the machine body in the working machine arranging the control valve on the front portion of the machine body, there is a possibility that mud is deposited on the control valve.

To solve the above mentioned problems, the present invention intends to provide a working machine capable of preventing the deposit of mud on the control valve even when the control valve is mounted at the foot of the operator seat.

In the working machine including the transmission case on the machine body, the transmission case being configured to house the motive power transmission device for transmitting a motive power to the travel device, the working machine is required to have a space, the space being used for disposing the hydraulic operation fluid tank.

In addition, the working machine includes a gas spring in an internal portion of the machine body, the gas spring being configured to lift up the cabin, and accordingly it is also required for the working machine to have a space for installation of the gas spring.

To solve the above mentioned problems, the present invention intends to provide a working machine capable of preparing a space for installation of the hydraulic operation fluid tank and/or the gas spring, the working machine including a transmission case on the machine body, the transmission case being configured to house a motive power transmission device for transmitting a motive power to a travel device.

Means of Solving the Problems

To solve the above-mentioned technical problems, techniques that the present invention provides are characterized in the following points.

In a first aspect of the present invention, a working machine comprising: a machine body; a motor mounted on the machine body; an output shaft protruding from a rear portion of the motor; a rear attachment portion disposed on the rear portion of the motor, the rear attachment portion facing backward; and a mount member configured to support the motor to suppress vibration of the motor, the mount member including: a first support member having an opposite attachment portion, the opposite attachment portion being attached opposite to the rear attachment portion; an elastic member attached to the first support member; and a second support member disposed on the machine body, the second support member being configured to support the elastic member.

In a second aspect of the present invention, the working machine according to the first aspect, wherein the rear attachment portion includes: a first attachment portion; and a second attachment portion, and the first support member has a width equal to or less than an interval between: an outside surface of the first attachment portion; and an outside surface of the second attachment portion.

In a third aspect of the present invention, the working machine according to the second aspect, wherein the opposite attachment portion includes: a third attachment portion attached to the first attachment portion; and a fourth attachment portion attached to the second attachment portion, and the first support member includes: a first arm portion extending backward from the third attachment portion; and a second arm portion extending backward from the fourth attachment portion.

In a fourth aspect of the present invention, the working machine according to the third aspect, wherein the first support member includes: a joint portion configured to joint the first arm portion to the second arm portion, the joint portion being configured to mount the elastic member.

In a fifth aspect of the present invention, the working machine according to the first aspect, wherein the second support member includes: a fixation portion attached to the machine body; and a protruding member protruding upward from the fixation portion, and the first support member includes: a rim forming an insertion hole, the insertion hole being used for insertion of the protruding member.

In a sixth aspect of the present invention, the working machine according to the first aspect, wherein the elastic member includes: a restriction member, the first support member includes: a stopper configured to restrict a deformation amount of the elastic member, and the stopper includes: a first protruding portion protruding downward, the first protruding portion being configured to contact to the second support member; and a second protruding portion protruding upward, the second protruding portion being configured to contact to the restriction member attached to the elastic member.

In a seventh aspect of the present invention, the working machine according to the first aspect, including: a bumper portion disposed on an rear end of the machine body; and a hydraulic hose disposed between the second support member and the bumper portion, wherein the motor is arranged on a rear portion of the machine body.

In an eighth aspect of the present invention, the working machine according to the first aspect, comprising: a bonnet configured to cover a rear portion of the motor; a ride control

valve; a bucket level control valve; and a quick hitch valve, wherein the motor is arranged on the rear portion of the machine body, and the ride control valve, the bucket level control valve, and the quick hitch valve are disposed on a side of the motor in front of the bonnet.

In a ninth aspect of the present invention, the working machine according to the first aspect, comprising: a bonnet configured to cover a rear portion of the motor; and an oil filter, wherein the motor is arranged on the rear portion of the machine body, and the oil filter is disposed on a side of the motor in front of the bonnet.

To solve the above-mentioned technical problems, techniques that the present invention provides are characterized in the following points.

In a tenth aspect of the present invention, a working machine comprising: a machine body; a first travel device disposed on a right side of the machine body; a second travel device disposed on a left side of the machine body; a motive power transmission device configured to transmit a motive power to the travel device; a first transmission case disposed on the right side of the machine body, the first transmission case being configured to house the motive power transmission device; a second transmission case disposed on the left side of the machine body, the second transmission case being configured to house the motive power transmission device; an operator seat mounted on the machine body; a first operation lever disposed on a right side of the operator seat; a second operation lever disposed on a left side of the operator seat; a first attachment member attached on the first transmission case disposed on the right side; a second attachment member attached on the second transmission case disposed on the left side; and a joint member configured to joint the first attachment member to the second attachment member, the joint member being configured to support the first operation lever and the second operation lever, the first operation lever and the second operation lever being capable of freely swinging.

In an eleventh aspect of the present invention, the working machine according to the tenth aspect, including: a right stopper disposed on the first attachment member, the right stopper being configured to restrict a distance of swinging of the first operation lever disposed on the right side; and a left stopper disposed on the second attachment member, the left stopper being configured to restrict a distance of swinging of the second operation lever disposed on the left side.

In a twelfth aspect of the present invention, the working machine according to the tenth aspect, including a first cover arranged under the operator seat; a hinge disposed on one end of the first cover; and a second cover jointed to the hinge; wherein the first cover includes: a rim forming at least one through hole for insertion of the first operation lever and the second operation lever.

In a thirteenth aspect of the present invention, the working machine according to the twelfth aspect, wherein at least one of the first cover and the second cover includes: a wall portion configured to form a space for housing air.

To solve the above-mentioned technical problems, techniques that the present invention provides are characterized in the following points.

In a fourteenth aspect of the present invention, a working machine comprising: a machine body; an actuator; a control valve configured to control a hydraulic operation fluid, the hydraulic operation fluid being used for operating the actuator; and a support base disposed on a front side of the machine body, the support base including: an attachment portion attached to a bottom portion of the machine body; a leg portion standing upward from the attachment portion; and a mount portion disposed on an upper side of the leg portion, the mount portion being configured to mount the control valve.

In a fifteenth aspect of the present invention, the working machine according to the fourteenth aspect, comprising: a pedal configured to operate the control valve, wherein the support base includes: a pedal attachment portion for attachment of the pedal.

In a sixteenth aspect of the present invention, the working machine according to the fourteenth aspect, comprising: an operator seat mounted on the machine body; and a floor step disposed in front of the operator seat, wherein the mount portion is disposed below the floor step.

In a seventeenth aspect of the present invention, the working machine according to the fourteenth aspect, comprising: a case disposed inside the machine body; and a hydraulic pipe disposed from the control valve toward a rear portion of the machine body along a side portion of the machine body, the hydraulic pipe being fixed to the case.

In an eighteenth aspect of the present invention, the working machine according to the fourteenth aspect, comprising: a rim disposed on a corner portion between a front portion of the machine body and a bottom portion of the machine body, the rim forming an cleaning opening; and a support base disposed on the bottom portion.

To solve the above-mentioned technical problems, techniques that the present invention provides are characterized in the following points.

In a nineteenth aspect of the present invention, a working machine comprising: a machine body; a travel device arranged on an outside of the machine body; a motive power transmission device configured to transmit a motive power to the travel device; a transmission case configured to house the motive power transmission device; and a hydraulic operation fluid tank disposed on an upper surface of the transmission case.

In a twentieth aspect of the present invention, a working machine comprising: a machine body; a travel device arranged on an outside of the machine body; a motive power transmission device configured to transmit a motive power to the travel device; a pair of transmission cases configured to house the motive power transmission device, one of the transmission case being disposed on a right portion of the machine body, the other one of the transmission case being disposed on a left portion of the machine body; and a hydraulic operation fluid tank disposed on an upper surface of any one of the pair of transmission cases.

In a twenty-first aspect of the present invention, a working machine comprising: a machine body; a cabin mounted on the machine body, the cabin being capable of swinging upward and downward; a travel device arranged on an outside of the machine body; a motive power transmission device configured to transmit a motive power to the travel device; a transmission case configured to house the motive power transmission device; and a plurality of gas springs disposed on an upper surface of the transmission case, the gas springs being configured to lift up the cabin.

In a twenty-second aspect of the present invention, a working machine comprising: a machine body; a cabin mounted on the machine body, the cabin being capable of swinging upward and downward; a travel device arranged on an outside of the machine body; a motive power transmission device configured to transmit a motive power to the travel device; a pair of transmission cases configured to house the motive power transmission device, one of the transmission case being disposed on a right portion of the machine body, the other one of the transmission case being

disposed on a left portion of the machine body; and a plurality of gas springs disposed on an upper surface of any one of the pair of transmission cases, the gas springs being configured to lift up the cabin.

In a twenty-third aspect of the present invention, a working machine comprising: a machine body; a cabin mounted on the machine body, the cabin being capable of swinging upward and downward; a travel device arranged on an outside of the machine body; a motive power transmission device configured to transmit a motive power to the travel device; a pair of transmission cases configured to house the motive power transmission device, one of the transmission case being disposed on a right portion of the machine body, the other one of the transmission case being disposed on a left portion of the machine body; a hydraulic operation fluid tank on an upper surface of any one of the pair of transmission cases, and a plurality of gas springs disposed on an upper surface of the other one of the pair of transmission cases, the gas springs being configured to lift up the cabin.

In a twenty-fourth aspect of the present invention, the working machine according to the nineteenth aspect, comprising: a first boom arranged on a right side of the machine body, the first boom being capable of swinging upward and downward; and a second boom arranged on a left side of the machine body, the second boom being capable of swinging upward and down ward, wherein the hydraulic operation fluid tank includes: a fluid filler tube having a fluid filler opening; and an fluid gauge, and the fluid filler opening and the fluid gauge are disposed below the booms.

In a twenty-fifth aspect of the present invention, the working machine according to the twenty-fourth aspect, comprising: a front wheel disposed on the travel device; and a rear wheel disposed on the travel device, wherein the fluid filler opening and the fluid gauge are disposed between the front wheel and the rear wheel.

In a twenty-sixth aspect of the present invention, the working machine according to the twenty-first aspect, comprising: a first pin configured to pivotally support a lower end portion of the plurality of gas springs; and a second pin configured to pivotally support an upper end portion of the plurality of gas springs.

In a twenty-seventh aspect of the present invention, the working machine according to the twenty-first aspect, comprising: a restriction member configured to restrict stretching and shortening of at least one of the plurality of gas springs, the restriction member having two positions; one of the two positions is a restricting position where the restriction member contacts to the gas spring to restrict the stretching and shortening of the gas spring, and the other one of the two positions is an allowance position where the restriction member is released from the restricting position to allow the stretching and shortening of the gas spring.

In a twenty-eighth aspect of the present invention, the working machine according to the nineteenth aspect, wherein the machine body includes: a side member, the transmission case includes: the side member; and a cover arranged on a side of the side member, the side being opposite to the travel device.

In a twenty-ninth aspect of the present invention, the working machine according to the twenty-eighth aspect, wherein the side member includes: a first plate member; and a second plate member standing up from the first plate member, the cover includes: a third plate member disposed to be opposite to the second plate member; and a fourth plate member placed above the first plate member to be opposite to the first plate member, and an outer surface of the fourth plate member serves as an upper surface of the transmission case.

Effects of the Invention

According to the present invention, a rear attachment portion is disposed on a rear portion of the motor, the rear attachment portion facing backward, and a mount member supports the motor to suppress vibration of the motor, the mount member including a first support member having an opposite attachment portion attached to be opposite to the rear attachment portion, and further, the first support member of the mount member is attached to the rear attachment portion from behind the motor, the rear attachment portion being disposed on the rear portion of the motor. In this manner, a space is not required on a right side of and on a left side of the rear portion of the motor, the space being used for attachment of the first support member, thereby the mount member allows the good layout of and the easy maintenance of parts disposed around the rear portion of the motor.

According to the present invention, a joint member joints the first attachment member to the second attachment member, the first attachment member being attached to a right transmission case, the second attachment member being attached to a left transmission case. And, the joint member supports a right operation lever and a left operation lever, the first operation lever and the second operation lever being capable of freely swinging. In this manner, the first attachment member, the second attachment member, and the right and left operation levers are assembled to be one component. The assembled component can be placed on the transmission cases from above and can be assembled to the transmission cases, thereby simplifying the assembly of the operation levers.

According to the present invention, a support base is disposed on a front side of the machine body, the support base including: an attachment portion attached to a bottom portion of the machine body; a leg portion standing upward from the attachment portion; and a mount portion disposed on an upper side of the leg portion, the mount portion being configured to mount the control valve. In this manner, the control valve can be installed being floated (separated upward) from a bottom portion of the machine body, and thereby the control valve can be prevented from deposition of mud on the control valve when the control valve is placed at a foot of the operator seat.

According to the present invention, a hydraulic operation fluid tank is disposed on an upper surface of the transmission case, the transmission case being configured to house a motive power transmission device for transmitting a motive power to a travel device. In this manner, an installation place for the hydraulic operation fluid tank can be formed.

In addition, according to the present invention, a plurality of gas springs are disposed on an upper surface of the transmission case, the gas springs being configured to lift up the cabin. In this manner, an installation place for the plurality of gas springs can be formed. The present invention can form an installation place for the hydraulic operation fluid tank and/or the gas springs by efficiently using the upper surface of the transmission case.

BRIEF DESCRIPTION OF THE DRAWINGS

FIG. **1** is a schematic perspective view of a machine body according to an embodiment of the present invention, diagonally showing the front of the machine body;

FIG. **2** is a schematic perspective view of the machine body according to the embodiment, diagonally showing the back of the machine body;

FIG. **3** is a back cross-sectional view of an intermediate portion of the machine body according to the embodiment, the intermediate portion being a portion intermediate in a front to rear direction (or a rear to front direction);

FIG. **4** is a side view of the machine body according to the embodiment;

FIG. **5** is a side view of an engine according to the embodiment;

FIG. **6** is a back view of the engine according to the embodiment;

FIG. **7** is a schematic perspective view of a mount member according to the embodiment;

FIG. **8** is a side cross-sectional view of the mount member according to the embodiment;

FIG. **9** is a back view of the mount member according to the embodiment;

FIG. **10** is a plan view of a portion behind the engine according to the embodiment;

FIG. **11** is a schematic plan view of a portion around the engine according to the embodiment;

FIG. **12** is a front view of a lever support member according to the embodiment;

FIG. **13** is a side view of the lever support member according to the embodiment;

FIG. **14** is a side cross-sectional view around an operator seat according to the embodiment;

FIG. **15** is a perspective view of a cover member and a floor step according to the embodiment;

FIG. **16** is a font cross-sectional view of a first cover of the cover member according to the embodiment;

FIG. **17** is a plan cross-sectional view of a second cover of the cover member according to the embodiment;

FIG. **18** is an enlarged view of a Q section in FIG. **14**;

FIG. **19** is a side cross-sectional view of a support base according to the embodiment;

FIG. **20** is a back view of the support base according to the embodiment;

FIG. **21** is a schematic perspective view of the support base, upwardly showing the front of the support base;

FIG. **22** is a plan view showing piping of a operation control valve according to the embodiment;

FIG. **23** is a perspective view showing the piping of the operation control valve according to the embodiment;

FIG. **24** is a right side view showing arrangement of a hydraulic operation fluid tank according to the embodiment;

FIG. **25** is a right side view showing arrangement of the hydraulic operation fluid tank and a gas spring according to the embodiment;

FIG. **26** is a back view showing the arrangement of the hydraulic operation fluid tank and the gas spring according to the embodiment;

FIG. **27** is a side view showing a regulation member according to the embodiment under a condition where the gas spring is shortened;

FIG. **28** is a side view showing the regulation member according to the embodiment under a condition where the gas spring is stretched;

FIG. **29** is a side view of a working machine according the embodiment;

FIG. **30** is a plan view of the working machine according to the embodiment; and

FIG. **31** is a front view of the working machine according to the embodiment.

DESCRIPTION OF THE EMBODIMENTS

Referring to drawings, an embodiment of the present invention will be described below.

FIG. **29** is a side view of a working machine **1** according to an embodiment of the present invention. FIG. **30** is a plan view of the working machine **1**. FIG. **31** is a front view of the working machine **1**.

FIG. **29** to FIG. **31** show a Skid Steer Loader (SSL) as an example of the working machine **1** according to the embodiment of the present invention. However, the working machine of the present invention is not limited to the Skid Steer Loader (SSL), and can be other types of the working machine, for example, a Track Loader (TL), a Compact Track Loader (CTL), and the like.

The skid steer loader **1** is the working machine **1** according to the embodiment. The skid steer loader **1** includes a body **2** of the working machine (hereinafter referred to as a machine body **2**), a cabin **3**, an operation device **4**, and travel devices **5**. The cabin **3** is mounted on the machine body **2**. An operator seat **8** is provided in the cabin **3**. The operation device **4** is attached on the machine body **2**. The skid steer loader **1** includes two travel devices **5**; one of the travel devices **5** is provided on a right side of the machine body **2**, and the other one is provided on a left side of the machine body **2**. A motor **6** is mounted on a rear portion of the machine body **2**. The motor **6** is an engine, an electric motor, and the like. The skid steer loader **1** according to the embodiment employs a diesel engine.

Hereinafter, in explanations of the embodiment of the present invention and in explanations of the modified examples of the embodiment, a forward direction (a direction shown by an arrowed line F in FIG. **29**) corresponds to a front side of an operator seating on the operator seat **8** of the skid steer loader **1**, a backward direction (a direction shown by an arrowed line B in FIG. **29**) corresponds to a back side of the operator, a leftward direction (a direction shown by an arrowed line L in FIG. **31**) corresponds to a left side of the operator, and a rightward direction (a direction shown by an arrowed line R in FIG. **31**) corresponds to a right side of the operator.

In addition, in explanations of the embodiment of the present invention and in explanations of the modified examples of the embodiment, a direction from the front side shown by the arrowed line F toward the back side shown by the arrowed line B (or a direction from the back side shown by the arrowed line B toward the front side shown by the arrowed line A) is referred to as a front to rear direction (or a rear to front direction), and a horizontal direction perpendicular to the front to rear direction (or the rear to front direction) is a direction K along a width of the machine body **2**. The direction K along the width of the machine body **2** is hereinafter referred to as the machine width direction K. As shown in FIG. **31**, in the following description, a direction from a center portion of the machine body **2** toward the above mentioned right side can be referred to as an outward direction. And, a direction from the center portion of the machine body **2** toward the above mentioned left side can be also referred to as the outward direction. The outward direction is hereinafter referred to as a machine outward direction. In other words, the machine outward direction corresponds to a direction departing from the center portion of the machine body **2** in the machine width direction K. A direction opposite to the machine outward direction can be

referred to as an inward direction. The inward direction is hereinafter referred to as a machine inward direction. In other words, the machine inward direction corresponds to a direction toward the center portion of the machine body **2** in the machine width direction K.

As shown in FIG. **29** and FIG. **31**, the operation device **4** includes booms **10**, an operation tool **11**, lift links **12**, control links **13**, boom cylinders **14**, and bucket cylinders **15**.

The operation device **4** includes two booms **10**; one of the booms **10** is provided on a right side of the cabin **3** (referred to as the right boom **10**) and is capable of freely swinging upward and downward, and the other one is provided on a left side of the cabin **3** (referred to as the left boom **10**) and is capable of freely swinging upward and downward. The operation tool **11** is a bucket (hereinafter referred to as a bucket **11**), for example. The bucket **11** is provided on tip portions (front end portions) of the booms **10** and is capable of freely swinging upward and downward. The lift link **12** and the control link **13** support a base portion (a rear portion) of the boom **10** so that the boom **10** is capable of freely swinging upward and downward. The boom cylinder **14** is capable of being stretched and shortened, thereby moving the boom **10** upward and downward. The bucket cylinder **15** is capable of being stretched and shortened, thereby swinging the bucket **11**.

The operation device **4** includes a joint pipe **7** having a deformed shape, that is, the joint pipe **7** being a deformed pipe. The joint pipe **7** is connected to a front portion of the right boom **10** and to a front portion of the left boom **10** between the right boom **10** and the left boom **10**, thereby jointing the right boom **10** and the left boom **10** with each other.

The operation device **4** includes a joint pipe **9** having a cylindrical shape, that is, the joint pipe **9** being a cylindrical pipe. The joint pipe **9** is connected to a base portion (a rear portion) of the right boom **10** and to a base portion (a rear portion) of the left boom **10** between the right boom **10** and the left boom **10**, thereby jointing the right boom **10** and the left boom **10** with each other.

The operation device **4** includes two lift links **12**, two control links **13**, and two boom cylinders **14**. One of the lift links **12** (the right lift link **12**), one of the control links **13** (the right control link **13**), and one of the boom cylinders **14** (the right boom cylinder **14**) are provided on a right side of the machine body **2**, corresponding to the right boom **10** (also referred to as the corresponding boom **10**). And, the other one of the lift links **12** (the left lift link **12**), the other one of the control links **13** (the left control link **13**), and the other one of the boom cylinders **14** (the left boom cylinder **14**) are provided on a left side of the machine body **2**, corresponding to the left boom **10** (also referred to as the corresponding boom **10**).

The lift link **12** is vertically provided on a rear portion of the base portion of the boom **10**. The lift link **12** is supported at an upper portion of the lift link **12** by a pivot shaft **16** (a first pivot shaft) to be capable of freely turning around a horizontal axis of the pivot shaft **16**, the lift link **12** being supported on the rear portion of the base portion of the boom **10** by the pivot shaft **16**. In addition, the lift link **12** is supported at a lower portion of the lift link **12** by a pivot shaft **17** (a second pivot shaft) to be capable of freely turning around a horizontal axis of the pivot shaft **17**, the lift link **12** being supported on the rear portion of the machine body **2** by the pivot shaft **16**. The second pivot shaft **17** is disposed lower than the first pivot shaft **16**.

The boom cylinder **14** is supported at an upper portion of the boom cylinder **14** by a pivot shaft **18** (a third pivot shaft) to be capable of freely turning around a horizontal axis of the pivot shaft **18**. The third pivot shaft **18** is disposed on the base portion of the boom **10** in front of the first pivot shaft **16**. The boom cylinder **14** is supported at a lower portion of the boom cylinder **14** by a pivot shaft **19** (a fourth pivot shaft) to be capable of freely turning around a horizontal axis of the pivot shaft **19**. The fourth pivot shaft **19** is disposed on a lower portion of the rear portion of the machine body **2**, being lower than the third pivot shaft **18**.

The control link **13** is disposed in front of the lift link **12**. One end of the control link **13** is supported by a pivot shaft **20** (a fifth pivot shaft) to be capable of freely turning around a horizontal axis of the pivot shaft **20**. The fifth pivot shaft **20** is disposed on the machine body **2**. The other end of the control link **13** is supported by a pivot shaft **21** (a sixth pivot shaft) to be capable of freely turning around a horizontal axis of the pivot shaft **21**. The sixth pivot shaft **21** is disposed on the boom **10** in front of the second pivot shaft **17**, being higher than the second pivot shaft **17**.

Stretching and shortening of the boom cylinder **14** swing the boom **10** upward and downward around the first pivot shafts **16**, the boom **10** being supported on the base portion of the boom **10** by the lift link **12** and the control link **13**, thereby moving a tip portion of the boom **10** upward and down ward. The control link **13** is swung upward and downward around the fifth pivot shaft **20** by the swinging upward and downward of the boom **10**. The lift link **12** is swung forward and backward around the second pivot shaft **17** by the swinging upward and downward of the control link **13**.

An attachment device **201** is disposed on each of the front portions (the tip portions) of the booms **10**. The bucket **11** is capable of being attached to and detached from the attachment device **201**. The attachment device **201** includes an attachment body **23**, a lock mechanism **202**, and a lock cylinder **203**.

A pivot pin **24** is disposed on each of the front portions of the booms **10**, and an attachment body **23** is pivotally supported on the front portions (the tip portions) of the booms **10**. The bucket **11** is attached to the attachment body **23** and is capable of being freely attached and detached. The attachment body **23** is supported on the front portions of the booms **10** by the pivot pin **24**, thereby being capable of freely turning about a horizontal axis of the pivot pin **24**. The attachment body **23** disposed on the right side is jointed to the attachment body **23** disposed on the left side by a joint member **204**.

The lock mechanism **202** prevents the bucket **11** from being detached from the attachment body **23**. The lock cylinder **203** moves the lock mechanism **202**, thereby turning the lock mechanism **202** into a locking operation state or into a lock-releasing operation state. The lock cylinder **203** is constituted of a double action hydraulic cylinder.

Not only the bucket **11**, other operation tools can be attached to the attachment device **201**. The following attachments (spare attachments) are exemplified as the other operation tools; for example, a hydraulic crusher, a hydraulic breaker, an angle broom, an earth auger, a pallet fork, a sweeper, a mower, a snow blower, and the like.

A hydraulic pressure extraction member **322** is disposed on the front portion of the left boom **10**. The hydraulic pressure extraction member **322** is a device for connecting an hydraulic actuator to a hydraulic hose disposed on the left boom **10**, the hydraulic actuator being installed on the spare attachment. The hydraulic pressure extraction member **322** is connected to the hydraulic actuator of the spare attachment by another hydraulic hose. The hydraulic operation

fluid is supplied to the hydraulic pressure extraction member **322** at first, and then passes through the hydraulic hose to be supplied to the hydraulic actuator.

The bucket cylinder **15** is arranged closer to the front portion of each of the booms **10**. The bucket cylinder **15** is pivotally supported on the boom **10** by a first bucket cylinder pin **26** at an upper portion of the bucket cylinder **15**, thereby being capable of freely turning about a horizontal axis of the first bucket cylinder pin **26**. The bucket cylinder **15** is pivotally supported on the attachment body **23** by a second bucket cylinder pin **27** at a lower portion of the bucket cylinder **15**, thereby being capable of freely turning about a horizontal axis of the second bucket cylinder pin **27**. Stretching and shortening of the bucket cylinder **15** swing the bucket **11**.

In the embodiment, both of the right travel device **5** and the left travel device **5** employ a wheeled travel device, the wheeled travel device having a front wheel **5**F and a rear wheel **5**R. However, a crawler travel device (including a semi-crawler travel device) may be employed as the travel device **5**.

Next, a concrete configuration of the steer skid loader **1** will be described below. As shown in FIG. **1** and FIG. **2**, the machine body **2** includes a main frame **205** and a support frame **206**.

The main frame **205** includes a right frame portion **208**, a left frame portion **209**, a front frame portion **210**, and a bottom frame portion **211**. The right frame portion **208** constitutes a right portion of the machine body **2**. The left frame portion **209** constitutes a left portion of the machine body **2**. The front frame portion **210** constitutes a front portion of the machine body **2**. The bottom frame portion **211** constitutes a bottom portion of the machine body **2**.

As shown in FIG. **3**, the right frame portion **208** and the left frame portion **209** each include a side member **212**, an upper plate member **213**, and a cover **214**.

The side member **212** includes a first plate member **215** and a second plate member **216**. The second plate member **216** stands up from the first plate member **215**. In particular, the second plate member **216** extends upward from an end portion **215***a* of the first plate member **215**, the end portion **215***a* being disposed on an outer side of the first plate member **215** (on an outer side of the machine body **2**). In the embodiment, the first plate member **215** and the second plate member **216** are integrally formed by bending a single plate.

The upper plate member **213** is positioned above the side member **212**. The upper plate member **213** is placed on an upper portion of the second plate member **216** of the side member **212** at a lower portion of the upper plate member **213**, and is attached and fixed by bolts.

The cover **214** is arranged on an inner side of the side member **212** of the machine body **2** (on an inner side of the machine body **2**). In other words, the cover **214** is arranged on a side of the side member **212**, the side being opposite to the travel device **5**. The cover **214** includes a third plate member **217** and a fourth plate member **218**. The third plate member **217** is disposed to be opposite to the second plate member **216**. The fourth plate member **218** is placed above the first plate member **215** and is opposite to the first plate member **215**.

The fourth plate member **218** extends from an upper end of the third plate member **217** toward the second plate member **216**. The third plate member **217** is connected to the first plate member **215** at a lower end of the third plate member **217**. The fourth plate member **218** is connected to the second plate member **216** at an end portion of the fourth plate member **218**. In the embodiment, the third plate member **217** and the fourth plate member **218** are integrally formed by bending a single plate.

Transmission cases **219**R and **219**L are constituted of the side member **212** and the cover **214**. That is, the side member **212** and the cover **214** form a pair of the transmission cases **219**R and **219**L, the transmission case **219**R being disposed on a right portion of the machine body **2**, the transmission case **219**L being disposed on a left portion of the machine body **2**.

As shown in FIG. **4**, front ends of the transmission cases **219**R and **219**L are closed by a front cover plate **220**, and rear ends of the transmission cases **219**R and **219**L are closed by a rear cover plate **221**.

As shown in FIG. **3**, a motive power transmission device **222**R is housed in the transmission case **219**R, and a motive power transmission device **222**L is housed in the transmission case **219**L. The motive power transmission devices **222**R and **222**L transmit the motive power to the front wheels **5**F and the rear wheels **5**R of the travel devices **5**.

A travel motor **223**R is attached to the third plate member **217** of the cover **214** disposed on the right side, and a travel motor **223**L is attached to the third plate member **217** of the cover **214** disposed on the left side. The travel motors **223**R and **223**L are hydraulic motors, the travel motors **223**R and **223**L each constituting a part of a hydrostatic continuously variable transmission (also referred to as an HST). The travel motor **223**R disposed on the right side dives the front wheel **5**F and the rear wheel **5**R of the right travel device **5** through the motive power transmission device **222**R disposed on the right side. The travel motor **223**L disposed on the left side dives the front wheel **5**F and the rear wheel **5**R of the left travel device **5** through the motive power transmission device **222**L disposed on the left side.

As shown in FIG. **1** and FIG. **2**, The front frame portion **210** joints the right frame portion **208** and the left frame portion **209** to each other at front ends of the right frame portion **208** and the left frame portion **209**. The front frame portion **210** includes an upper plate **224** and a lower plate **225**. The upper plate **224** mainly joints the upper plate members **213**. The lower plate **225** mainly joints the side members **212**.

The bottom frame portion **211** includes a main plate **226**, a rear plate **227**, and a bumper member **228** (a bumper portion). The main plate **226** is disposed from the front end of the machine body **2** to the rear portion of the machine body **2**. The rear plate **227** is placed behind the main plate **226** between the support frame **206** disposed on the right side and the support frame **206** disposed on the left side. The rear plate **227** extends from a lower position of a rear portion of the engine **6** toward a backward direction of the engine **6**. In addition, the rear plate **227** is disposed being backwardly lifted up to be tilted.

The bumper member **228** is constituted of a piece of plate member, and is placed on a rear end portion of the machine body **2**. The bumper member **228** joints rear portions of the support frames **206** to each other. A right side **228***a* of the bumper member **228** protrudes backward from the support frame **206** disposed on the right side. A left side **228***b* of the bumper member **228** protrudes backward from the support frame **206** disposed on the left side. A joint portion **228***c* is formed between the right side **228***a* of the bumper member **228** and the left side **228***b* of the bumper member **228**, the joint portion **228***c* being formed to be approximately linear along the machine width direction K. A connecting portion between the joint portion **228***c* and the right side **228***a* is curved. A connecting portion between the joint portion **228***c*

and the left side **228***b* is curved. The joint portion **228***c* is placed on a rear end of the rear plate **227** and fixed to the rear end.

As shown in FIG. **1** and FIG. **2**, one of the support frames **206** is disposed on a right side of a rear portion of the main frame **205**, and the other one of the support frames **206** is disposed on a left side of the rear portion of the main frame **205**.

Each of the support frames **206** includes: a pair of a support wall **229***a* and a support wall **229***b*; and a rear wall **230**. One of the support walls, the support wall **229***a*, is separated from the other one of the support walls, the support wall **229***b*, in the machine width direction K. The support wall **229***a* and the support wall **229***b* are disposed to be opposite to each other. Of the pair of support walls **229***a* and **229***b*, the support wall **229***a* (also referred to as the inner support wall **229***a*) is fixed to the upper plate member **213**. The support wall **229***b* (also referred to as the outer support wall **229***b*) is placed outside the inner support wall **229***a*.

The rear wall **230** is jointed to a rear end of the support wall **229***a* and to a rear end of the support wall **229***b*, thereby jointing the support wall **229***a* and the support wall **229***b* to each other. A fender **231** is disposed between the pair of support walls **229***a* and **229***b*, the fender **231** being configured to cover the rear wheel **5**R at a back and upper side of the rear wheel **5**R

A joint frame **232** is disposed between the support frames **206**. The joint frame **232** joints front portions of the inner support walls **229***a* to each other. The joint frame **232** includes an upper plate member **234** and a front plate member **235**. The front plate member **235** extends downward from a front end of the upper plate member **234**.

As shown in FIG. **1**, the upper plate member **234** is provided with a pair of machine body brackets **236**. As shown in FIG. **25**, a cabin bracket **237** is pivotally supported by a pivot shaft **238** on the machine body bracket **236**. The cabin bracket **237** is a bracket disposed on a rear portion of the cabin **3**. Accordingly, the cabin **3** is capable of freely swing upward and downward about the pivot shaft **238**.

As shown in FIG. **4**, a pump housing **239** is disposed on a front portion of the engine **6**. A pair of travel pumps **240**F and **240**R are disposed on the pump housing **239**, arranging the travel pumps **240**F and **240**R in parallel along the front to rear direction (or the rear to front direction). A first pump **241**, a second pump **242**, and a third pump **243** are disposed in front of the travel pump **240**F arranged on the front side, being arranged in parallel along the front to rear direction (or the rear to front direction). The engine **6** drives the pumps, that is, the travel pump **240**F, the travel pump **240**R, the first pump **241**, the second pump **242**, and the third pump **243**.

The travel pumps **240**F and **240**R are each constituted of a hydraulic pump of a variable displacement type, the travel pumps **240**F and **240**R constituting a part of the hydrostatic continuously variable transmission (also referred to as an HST) including the travel motors **223**R and **223**L. The travel pump **240**F arranged on the front side drives the travel motor **223**L disposed on the left side, and the travel pump **240**R arranged on the rear side drives the travel motor **223**R disposed on the right side.

The first pump **241**, the second pump **242**, and the third pump **243** are each constituted on a gear pump of a constant displacement type. The first pump **241** drives hydraulic actuators and hydraulic attachments, the hydraulic actuators being installed in the operation device **4**, the hydraulic attachments being attached to the operation device **4**. The second pump **242** is used for increasing the flow rate of the hydraulic operation fluid. The third pump **243** is mainly used for supply of a control signal pressure.

A travel lever (an operation lever) **244**R is disposed on a right side of a front portion of the operator seat **8**. A travel lever (an operation lever) **244**L is disposed on a left side of the front portion of the operator seat **8**. The travel lever **244**R is a lever used for operation of the travel pump **240**R. The travel lever **244**L is a lever used for operation of the travel pump **240**F. The right travel device **5** is operated by operating the travel pump **240**R. The left travel device **5** is operated by operating the travel pump **240**L. The travel lever **244**L disposed on the left side operates the travel pump **240**F disposed on the front side. The travel lever **244**R disposed on the right side operates the travel pump **240**R disposed on the rear side.

A control valve **245** (referred to as an operation control valve) for the operation device **4** is arranged below the operator seat **8** in front of the operator seat **8**. The operation control valve **245** incorporates a boom control valve, a bucket control valve (an operation tool control valve), and an attachment control valve in a valve body. The boom control valve is a valve for controlling the boom cylinder **14**. The bucket control valve is a valve for controlling the bucket cylinder **15**. The attachment control valve is a valve for controlling a hydraulic actuator installed in an attachment tool, the attachment tool being attached instead of the bucket **11**.

A bonnet (an engine hood) **530** is disposed in rear of the engine **6**. The bonnet **530** is attached to a support frame **206** by hinges at one end side of the bonnet **530**, and thereby being capable of being opened and closed. A rear end of the bumper member **228** protrudes more backward than the bonnet **530**. A fuel tank **532** is disposed between the engine **6** and the bonnet **530**. The fuel tank **532** is attached on the bonnet **530**.

As shown in FIG. **5**, a mount member **249**F is disposed on a front side of the engine **6**. A mount member **249**R is disposed on a rear side of the engine **6**. The mount member **249**F and the mount member **249**R are configured to support the engine. A pair of the mount members **249**F disposed on the front side support the front side of the engine **6**. Single mount member **249**R disposed on the rear side supports the rear side of the engine **6**.

As shown in FIG. **6**, an output shaft **246** protrudes from a lower portion of a rear portion (a back surface) of the engine **6**. That is, the output shaft **246** protrudes from the rear portion (the back surface), the rear portion (the back surface) being on a side opposite to a front surface of the engine **6**. The output shaft **246** drives a compressor and an alternator.

In addition, a rear attachment portion **251** including an attachment surface **250** is disposed under a rear end portion of the output shaft **264**, the attachment surface **250** facing backward. The rear attachment portion **251** includes a first attachment portion **251**R and a second attachment portion **251**L, the first attachment portion **251**R being disposed on the right side, the second attachment portion **251**L being disposed on the left side.

As shown in FIG. **8**, a screw hole **252** is formed on the attachment surface **250** of the first attachment portion **251**R, and another screw hole **252** is formed on the attachment surface **250** of the second attachment portion **251**L. The first attachment portion **251**R and the second attachment portion **251**L are formed integrally on the crankcase of the engine **6** by the casting.

As shown in FIG. **8** and FIG. **9**, the mount member **249**R disposed on the rear side includes a first support member

253, an elastic member 254, and a second support member 255. The first support member 253 is attached to the first attachment portion 251R and to the second attachment portion 251L. The elastic member 254 is attached to the first support member 253. The second support member 255 supports the elastic member 254.

As shown in FIG. 7, FIG. 8, and FIG. 9, the first support member 253 includes an opposite attachment portion 256, a first arm portion 257, a second arm portion 258, a joint portion 259, a first protruding portion 260, and a second protruding portion 261.

The opposite attachment portion 256 includes: a third attachment portion 256R disposed on the right side; and a fourth attachment portion 256L disposed on the left side. The third attachment portion 256R is attached to be opposed to the first attachment portion 251R. The fourth attachment portion 256L is attached to be opposed to the second attachment portion 251L.

As shown in FIG. 8, bolt insertion holes 262 are formed in the third attachment portion 256R, the bolt insertion holes 262 penetrating through in the front to rear direction (or the rear to front direction). Other bolt insertion holes 262 are formed in the fourth attachment portion 256L, the bolt insertion holes 262 penetrating through in the front to rear direction (or the rear to front direction). Bolts are inserted through the bolt insertion holes 262 of the third attachment portion 256R from behind the engine 6, and bolts are inserted through the bolt insertion holes 262 of the fourth attachment portion 256L from behind the engine 6. Then, the bolts are screwed into the screw holes 252 of the first attachment portion 251R and the second attachment portion 251L, thereby attaching the first support member 253 (the third attachment portion 256R and the fourth attachment portion 256L) to the first attachment portion 251R and the second attachment portion 251L.

The first arm portion 257 extends backward (about rightly-backward) from the third attachment portion 256R. The second arm portion 258 extends backward (about rightly-backward) from the fourth attachment portion 256L.

The joint portion 259 joints the first arm portion 257 to the second arm portion 258 between the arm portions. The elastic member 254 is attached to the joint portion 259. An attachment hole 263 is formed in the joint portion 259, the attachment hole 263 being used for attachment of the elastic member 254.

The elastic member 254 is formed of rubber (or a rubbery elastic member other than rubber). The elastic member 254 is divided into a hemispheric upper portion and a hemispheric lower portion, the hemispheric upper portion being referred to as a upper vibration-proof member 264, the hemispheric lower portion being referred to as a lower vibration-proof member 265. A cylindrical member 267 vertically penetrates the upper vibration-proof member 264 to be fixed to the upper vibration-proof member 264, and another cylindrical member 267 vertically penetrates the lower vibration-proof member 265 to be fixed to the lower vibration-proof member 265. A ring member 268 is fixed to a circumferential portion on a lower side of the upper vibration-proof member 264, and another ring member 268 is fixed to a circumferential portion on an upper side of the lower vibration-proof member 265.

The ring member 268 of the upper vibration-proof member 264 is fitted into the attachment hole 263 from above. The ring member 268 of the lower vibration-proof member 265 is fitted into the attachment hole 263 from below. A wall portion 269 disposed around the attachment hole 263 is sandwiched by: the ring member 268 of the upper vibration-proof member 264; and the ring member 268 of the lower vibration-proof member 265.

A presser plate 273 (a restriction member) is disposed on the upper vibration-proof member 264. A stud bolt 270 is inserted into both of the cylindrical member 267 disposed above and the cylindrical member 267 disposed below, penetrating through the presser plate 273. A nut 271 is screwed to an upper end portion of the stud bolt 270.

The first protruding portion 260 protrudes downward from a lower surface of the joint portion 259. The first protruding portion 260 is formed extending downward to have a cylindrical shape, the cylindrical shape having an opening bottom end. An inside of the first protruding portion 260 serves as an insertion hole 272 formed by a circular rim.

The second protruding portion 261 protrudes upward from the joint portion 259. The second protruding portion 261 is disposed on both sides of the attachment hole 263, being formed along a rim portion of the attachment hole 263. In addition, the second protruding portion 261 is placed under the presser plate 273.

The second support member 255 is placed below the joint portion 259. The second support member 255 includes a cylindrical member 274 and a fixation member 275.

The cylindrical member 274 is fixed to an upper surface of the rear plate 227 of the bottom frame portion 211 included in the machine body 2. The cylindrical member 274 has an elliptic cylinder shape, the elliptic cylinder shape being horizontally long in a plan view.

The fixation member 275 is constituted of a plate member formed to be elliptical in the plan view. The fixation member 275 closes an opening formed at an upper end of the cylindrical member 274. In addition, the fixation member 275 is fixed to the upper end of the cylindrical member 274. Furthermore, the elastic member 254 is placed on an upper surface of the fixation member 275, and thereby the engine 6 is elastically supported. That is, the elastic member 254 suppresses vibration of the engine 6.

The fixation member 275 has a circular rim forming an insertion hole 276. The stud bolt 270 is inserted into the insertion hole 276. A nut 277 is securely fixed to a lower surface of the fixation member 275, specifically to a portion corresponding to the insertion hole 276. A lower end portion of the stud bolt 270 is inserted into the insertion hole 276, and a lower end of the stud bolt 270 is screwed to the nut 277. The elastic member 254 is attached to the second support member 255 by screwing up the nut 271, the nut 271 being screwed to the upper end portion of the stud bolt 270.

A protruding member 278 is disposed on the fixation member 275, the protruding member 278 protruding upward. The protruding member 278 is constituted of a cylindrical short rod. The protruding member 278 is inserted into the insertion hole 272 of the first protruding portion 260.

The first protruding portion 260 and the second protruding portion 261 serve as a stopper for restricting a deformation amount of the elastic member 254. In particular, the first protruding portion 260 contacts to the second support member 255, and the second protruding portion 261 contacts to the presser plate 273, thereby the deformation amount of the elastic member 254 is restricted.

In addition, the protruding member 278 contacts to the circular rim (the inner surface) of the insertion hole 272 of the first protruding portion 260, thereby restricting a horizontal deformation amount of the elastic member 254.

In the above-described mount member 249R, the rear attachment portion 251 facing backward is disposed on the rear portion of the engine 6, and the first support member

253 of the mount member 249R includes the opposite attachment portion 256, the opposite attachment portion 256 being attached opposite to the rear attachment portion 251. In this manner, the first support member 253 of the mount member 249R is attached to the rear attachment portion 251 of the rear portion of the engine 6 from behind, and accordingly a space is not required on a right side of and on a left side of the rear portion of the engine 6, the space being used for attachment of the first support member 253, thereby the mount member 249R allows the good layout of and the easy maintenance of parts disposed around the rear portion of the engine 6.

In addition, the first support member 253 is compactly formed by integrally forming, by the casting, the opposite attachment portion 256, the first arm portion 257, the second arm portion 258, the joint portion 259, the first protruding portion 260, and the second protruding portion 261.

Moreover, as shown in FIG. 6, a width H1 of the first support member 253 is equal to or less than an interval H2 between: an outer side surface of the first attachment portion 251R; and an outer side surface of the second attachment portion 251L. In this manner, the first support member 253 does not protrude in the width direction from the rear attachment portion 251. Accordingly, the first support member 253 allows the good layout of and the easy maintenance of parts disposed around the rear portion of the engine 6. For example, an engine oil filter 279 can be disposed on a left side of the rear portion of the engine 6, thereby the first support member 253 improves the easy maintenance of the engine oil filter 279. In addition, the first support member 253 is formed by the casting, thereby a structure of the first support member 253 is simplified.

Moreover, the first protruding portion 260 and the second protruding portion 261 serve as stoppers for restricting a deformation amount of the elastic member 254. And, the first protruding portion 260 and the second protruding portion 261 are integrally formed as the first support member 253 by the casting, and thereby the number of parts is reduced.

As shown in FIG. 10, hydraulic hoses 280 are disposed between the second support member 255 and the bumper member 228, the hydraulic hose 280 running across the machine body 2. The hydraulic hoses 280 running across the machine body 2 are arranged being centralized on the bottom portion of the machine body 2 behind the engine 6, thereby being prevented from interrupting the check and maintenance of the inside of the machine body 2. In addition, since the hydraulic hoses 280 are intended to be arranged being centralized on the bottom portion of the machine body 2 behind the engine 6, the hydraulic hoses 280 can be easily arranged only by opening the bonnet 530. Furthermore, since the hydraulic hoses 280 are intended to be arranged being centralized on the bottom portion of the machine body 2 behind the engine 6, the hydraulic hoses 280 can be easily installed in the manufacturing. Moreover, since the hydraulic hoses 280 are intended to be arranged on the bottom portion of the machine body 2 behind the engine 6, the hydraulic hoses 280 can be arranged at a large bend radius. In this manner, the hydraulic hoses 280 are prevented from degradation such as the wearing degradation caused by hydraulic pulsation.

The cylindrical member 274 of the second support member 255 has an elliptic cylinder shape in the plan view, and thereby the cylindrical member 274 serves as a hose guide for the hydraulic hoses 280. In addition, a connecting portion between the joint portion 228*c* and the right side 228*a* is curved, a connecting portion between the joint portion 228*c* and the left side 228*b* is curved, and thereby the bumper 228 also serves as a hose guide for the hydraulic hoses 280. Furthermore, the hose guides are integrated into the second support member 255 and the bumper member 228 by using the second support member 255 and the bumper member 228 as the guide members for the hydraulic hoses 280.

As shown in FIG. 11, a ride control valve 281, an accumulator 282, a valve 283 for controlling a level of the bucket (referred to as a bucket level control valve 283), a quick hitch valve 284, and an oil filter 285 are disposed on the right and left sides of the engine 6 in front of the bonnet 530.

The ride control valve 281 is a valve for reducing the pitching and bounding of the machine body 2, the pitching and bounding being caused when the steer skid loader 1 runs uneven ground in conveyance of gravel, crushed stones, and the like. The ride control valve 281 is controlled to be opened and to be closed to make the accumulator 282 absorb fluctuation of a bottom pressure of the boom cylinder 14. The bucket level control valve 283 controls the bucket cylinder 15 to keep a level of the bucket 11 approximately constant, thereby preventing the gravel, crushed stones, and the like in the bucket 11 from falling from the bucket 11 even when the booms 10 swing upward and downward.

As shown in FIG. 30, the quick hitch valve 284 is a valve for controlling the lock cylinder 203 of the attachment device 201. The oil filter 285 is a filter for removing contamination, the contamination being present in a hydraulic pilot fluid discharged from the third pump 243. The oil filter 285 is periodically replaced by another oil filter 285.

The ride control valve 281, the accumulator 282, the bucket level control valve 283, the quick hitch valve 284, and the oil filter 285 can be easily accessed when the bonnet 530 is opened, thereby allowing the easy maintenance.

In addition, the ride control valve 281, the bucket level control valve 283, and the quick hitch valve 284 may be installed later as optional parts to the steer skid loader 1, depending on a type of the steer skid loader 1. For this reason, the installation positions of the ride control valve 281, the bucket level control valve 283, and the quick hitch valve 284 are prepared on the rear portion of the machine body 2, the rear portion being easily accessed when the bonnet 530 is opened, and thereby the ride control valve 281, the bucket level control valve 283, and the quick hitch valve 284 can be easily installed later.

As shown in FIG. 12 and FIG. 13, the travel levers 244R and 244L are supported by a lever support member 339. The lever support member 339 is disposed extending between: the transmission case 219R disposed on the right side; and the transmission case 219L disposed on the left side (from the transmission case 219R to the transmission case 219L).

The lever support member 339 includes a first attachment member 340, a second attachment member 341, a joint member 342, a first support cylinder 343, and a second support cylinder 344.

The first attachment member 340 is attached to the transmission case 219R disposed on the right side. The second attachment member 341 is attached to the transmission case 219L disposed on the left side.

The first attachment member 340 and the second attachment member 341 each include an attachment wall 345, an extending wall 346, a front wall 347, and a rear wall 348.

The attachment wall 345 of the first attachment member 340 is attached to an upper surface of the fourth plate member 218 of the transmission case 219R. The attachment

wall **345** of the second attachment member **341** is attached to an upper surface of the fourth plate member **218** of the transmission case **219**L.

The extending wall **346** of the first attachment member **340** extends downward from the attachment wall **345** of the first attachment member **340** along the third plate member **217** of the transmission case **219**R. The extending wall **346** of the second attachment portion **341** extends downward from the attachment wall **345** of the second attachment member **341** along the third plate member **217** of the transmission case **219**L.

The front wall **347** of the first attachment member **340** extends upward from a front end of the attachment wall **345** of the first attachment member **340**. The front wall **347** of the second attachment member **341** extends upward from a front end of the attachment wall **345** of the second attachment member **341**.

The rear wall **348** of the first attachment member **340** extends upward from a rear end of the attachment wall **345** of the first attachment member **340**. The rear wall **348** of the second attachment member **341** extends upward from a rear end of the attachment wall **345** of the second attachment member **341**

The joint member **342** is constituted of a cylindrical short rod. The joint member **342** joints the extending wall **346** of the first attachment member **340** to the extending wall **346** of the second attachment member **341** (between the extending walls **346**).

The first support cylinder **343** is fitted into a right portion of the joint member **342**, and the first support cylinder **343** is capable of freely turning about an axis of the first support cylinder **343** on the right portion. The second support cylinder **344** is fitted into a left portion of the joint member **342**, and the second support cylinder **344** is capable of freely turning about an axis of the second support cylinder **344** on the left portion.

The first support cylinder **343** is fixed to a lower end side of the travel lever **244**R disposed on the right side, thereby supporting the travel lever **244**R. In this manner, the travel lever **244**R disposed on the right side is capable of swinging forward and backward by turning together with the first support cylinder **343**. The second support cylinder **344** is fixed to a lower end side of the travel lever **244**L disposed on the left side, thereby supporting the travel lever **244**L. In this manner, the travel lever **244**L disposed on the left side is capable of swinging forward and backward by turning together with the second support cylinder **343**.

A first arm **349** is fixed to the first support cylinder **343**. The first arm **349** is pivotally supported on a front end side of a first interlocking link **350**. A rear end side of the first interlocking link **350** is jointed to an operation device not shown in the drawings, the operation device being configured to operate a swash plate of the travel pump **240**R disposed on the rear side. The travel lever **244**R disposed on the right side can be swung, thereby operating the swash plate of the travel pump **240**R.

A second arm **351** is fixed to the second support cylinder **344**. The second arm **351** is pivotally supported on a front end side of a second interlocking link **352**. A rear end side of the second interlocking link **352** is jointed to an operation device not shown in the drawings, the operation device being configured to operate a swash plate of the travel pump **240**L disposed on the front side. The travel lever **244**L disposed on the left side can be swung, thereby operating the swash plate of the travel pump **240**F.

Lower portions of the travel levers **244**R and **244**L are curved. The lower portion of the travel lever **244**R disposed on the right side is placed between the front wall **347** and the rear wall **348** both included in the first attachment member **340**. The lower portion of the travel lever **244**L disposed on the left side is placed between the front wall **347** and the rear wall **348** both included in the second attachment member **341**.

A right stopper **353** is attached to the front wall **347** of the first attachment member **340**. Another right stopper **353** is attached to the rear wall **348** of the first attachment member **340**. The travel lever **244**R disposed on the right side contacts to the right stoppers **353**, and thereby the right stoppers **353** restricting a distance of the swinging of the travel lever **244**R disposed on the right side.

A left stopper **354** is attached to the front wall **347** of the second attachment member **341**. Another left stopper **353** is attached to the rear wall **348** of the second attachment member **341**. The travel lever **244**L disposed on the left side contacts to the left stoppers **354**, and thereby the left stoppers **354** restricting a distance of the swinging of the travel lever **244**L disposed on the left side.

In addition, a lower portion of the travel lever **244**R is pivotally supported by a front end portion of a dumper **355**, and a lower portion of the travel lever **244**L is pivotally supported by a front end portion of another dumper **355**. A rear end portion of the dumper **355** disposed on the right side is pivotally supported by a stay **356** disposed on a side of the machine body **2** (the transmission case **219**R). A rear end portion of the another dumper **355** disposed on the left side is pivotally supported by another stay **356** disposed on a side of the machine body **2** (the transmission case **219**L). The dumper **355** disposed on the right side supports the travel lever **244**R. The dumper **355** disposed on the left side supports the travel lever **244**L. The dumpers **355** can be stretched and shortened by the swinging of the travel levers **244**R and **244**L, generating relatively low resistance when the travel levers **244**R and **244**L are swung at a relatively low speed. The dumpers **355** each generate high resistance when the travel levers **244**R and **244**L are swung at an excessively high speed.

As described above, the joint member **342** joints the first attachment member **340** to the second attachment member **341**, the first attachment member **340** being attached on the transmission case **219**R disposed on the right side, the second attachment member **341** being attached on the transmission case **219**L disposed on the left side. And, the joint member **342** supports the travel lever **244**R disposed on the right side and the travel lever **244**L disposed on the left side, and thereby the travel lever **244**R and the travel lever **244**L being capable of freely swinging. In this manner, the first attachment member **340**, the second attachment member **341**, and the travel levers **244**R and **244**L are assembled to be one component. The assembled component can be placed on the transmission cases **219**R and **219**L from above and can be assembled to the transmission cases **219**R and **219**L, thereby simplifying the assembly of the transmission levers **244**R and **244**L.

In addition, the front wall **347** and the rear wall **348** are disposed on each of the first attachment member **340** and the second attachment member **341**, the front wall **347** and the rear wall **348** having the stoppers **353** or the stoppers **354**. Thus, the stoppers **353** and **354** can be attached together with the first attachment member **340** and the second attachment member **341**, and thereby the assembly of the stoppers **353** and **354** can be simplified.

As shown in FIG. **14**, FIG. **15**, and FIG. **20**, a floor step **306** is disposed below and in front of the operator seat **8**. The floor step **306** constitutes a floor formed in front of the

operator seat **8**, and includes foot steps **290** and a center step **305**. One of the foot steps **290** is disposed the right side in front of the operator seat **8**. The other one of the foot steps **290** is disposed the left side in front of the operator seat **8**. The center step **305** is arranged between the foot step **290** disposed on the right side and the foot step **290** disposed on the left side.

The center step **305** includes an upper wall **305***a* and side walls **305***b*. The upper wall **305***a* is arranged above the mount portion **289** described later and above the foot steps **290**. Each of the side walls **305***b* extends from a rim of the upper wall **305***a* to the foot step **290**. The mount portion **289**, the operation control valve **245**, and a switch valve **304** are arranged below the floor step **306**.

A step cover **358** is disposed on the floor step **306**, the step cover **358** being formed of rubber. The step cover **358** covers upper portions of the foot step **290** and the center step **305**.

A cover member **357** is disposed behind the floor step **306** and under the operator seat **8**. The cover member **357** covers a portion under the operator seat **8**.

The cover member **357** includes a first cover **359**, a second cover **360**, and a hinge **361**. The first cover **359** is arranged under the operator seat **8**. The second cover **360** is disposed between: a front end of the first cover **359**; and a rear end of the floor step **306** (rear ends of the foot steps **290** and the center step **305**). The hinge **361** joints the front end of the first cover **359** to an upper end of the second cover **360**. In this manner, the second cover **360** is capable of freely swinging about the hinge **361** jointed to the first cover **359**.

The first cover **359** includes a first main cover portion **362**, an extending portion **363**L, and an extending portion **363**R.

The first main cover portion **362** is arranged under the operator seat **8**, and contacts to a cushion member **374**, the cushion member **374** being disposed on a lower surface side of the operator seat **8**. The operator seat **8** is mounted on the first main cover portion **362**. The extending portion **363**R is disposed on the right side of the first main cover portion **362**. The extending portion **363**L is disposed on the left side of the first main cover portion **362**. The extending portion **363**R disposed on the right side protrudes rightward toward the machine body **2**. The extending portion **363**L disposed on the left side protrudes leftward toward the machine body **2**. The extending portion **363**R and the extending portion **363**L are attached to a bracket fixed to the machine body **2**.

As shown in FIG. **14** and FIG. **16**, the first main cover portion **362** includes an upper wall **364** and a lower wall **365**. The upper wall **364** and the lower wall **365** constitute a space **366**. The space **366** contains the air (gas). In other words, the first main cover portion **362** is hollow.

The extending portion **363**R has a circular rim on a front portion of the extending portion **363**R, the circular rim forming a through hole **367** for inserting the travel lever **244**R. The extending portion **363**L has a circular rim on a front portion of the extending portion **363**L, the circular rim forming another through hole **367** for inserting the travel lever **244**L. Each of the circular rims forming the through holes **367** has a rectangular shape in a plan view. A resin cover **368** is disposed on a portion corresponding to the through hole **367** of the extending portion **363**R, the resin cover **368** being configured to cover the travel lever **244**R. And, another resin cover **368** is disposed on a portion corresponding to the through hole **367** of the extending portion **363**L, the another resin cover **368** being configured to cover the travel lever **244**L.

The second cover **360** includes a second main cover portion **369**, an attachment portion **370**R, and an attachment portion **370**L. The attachment portion **370**R is disposed on the right side of the second main cover portion **369**. The attachment portion **370**L is disposed on the left side of the second main cover portion **369**. The attachment portions **370**R and **370**L are attached to a bracket fixed to the machine body **2**.

As shown in FIG. **17**, the second main cover portion **369** includes a front wall **371** and a rear wall **372**. The front wall **371** and the rear wall **372** constitute a space **371**. The space **371** contains the air (gas). In other words, the second main cover portion **369** is hollow.

As shown in FIG. **18**, the hinge **361** reduces thickness of a part of portion of the hinge **361**, the portion being jointed to the first cover **359** and the second cover **360**.

The cover member **357** is formed by the blow molding in the embodiment.

If a vertically bending sheet metal serves as the cover member **357**, it is hard to move the vertically bending sheet metal (instead of the cover member **357**) from above, being close to the travel levers **244**R and **244**L. In particular, the vertically bending sheet metal is required to be prevented from contacting to peripheral parts disposed around the travel levers **244**R and **244**L in assembly for inserting the travel levers **244**R and **244**L into the through holes **367**. The assembly is very hard and sensitive. That is, it requires so much time and effort to insert the travel levers **244**R and **244**L through the cover member **357**.

On the contrary, in the cover member **357** according to the embodiment, the hinge **361** joints the second cover **360** to the first cover **359**. In this manner, the second cover **360** can be turned to be flat in plane continuing from the first cover **359** in the assembly, and the travel levers **244**R and **244**L can be inserted into the through holes **367**. Thus, the travel levers **244**R and **244**L can be easily inserted into the through holes **367**, and thereby the cover member **357** can be easily assembled.

In addition, the vertically bending sheet metal (instead of the cover member **357**) requires heat insulators in a large area of a surface of the vertically bending sheet metal. On the contrary, the cover member **357** according to the embodiment includes the air space formed by the blow molding, the air space providing an effect of the heat insulation, thereby not requiring to adhere the heat insulators to the cover member **357**.

As shown in FIG. **19** to FIG. **21**, a support base **286** is attached to a front portion of the main plate **226**. The support base **286** is formed of a plurality of plate members in combination of the plate members, and includes an attachment portion **287**R, an attachment portion **287**L, leg portions **288**, the mount portion **289**, the foot steps **290**, pedal attachment portions **291**, and a joint stay **292**.

The attachment portion **287**R is disposed close to a right side of the main plate **226**. The attachment portion **287**L is disposed close to a left side of the main plate **226**. The attachment portions **287**R and **287**L are each fixed to the main plate **226** by bolts **293**.

One of the leg portions **288** stands up upward from the attachment portion **287**R. The other one of the leg portions **288** stands up from the attachment portion **287**L. In the example shown by the drawings, one of the leg portions **288** extends upward from an end portion **287***a* of the attachment portion **287**R, the end portion **287***a* being disposed on the attachment portion **287**R and being close to a center in the machine width direction K, and the other one of the leg portions **288** extends upward from an end portion **287***a* of

the attachment portion **287**L, the end portion **287***a* being disposed on the attachment portion **287**L and being close to a center in the machine width direction K.

The mount portion **289** joints an upper end of the leg portion **288** disposed on the right side to an upper end of the leg portion **288** disposed on the left side. The operation control valve **245** is mounted on the mount portion **289**. The operation control valve **245** is transversely mounted on an upper surface of the mount portion **289**.

One of the foot steps **290** is disposed above the attachment portion **287**R disposed on the right side, and the other one of the foot steps **290** is disposed above the attachment portion **287**L disposed on the left side. One of the foot steps **290** is fixed to an upper end of the support bracket **294** disposed on an upper surface of the attachment portion **287**R, and the other one of the foot steps **290** is fixed to an upper end of the support bracket **294** disposed on an upper surface of the attachment portion **287**L. In addition, the foot steps **290** are arranged above the mount portion **289**.

One of the pedal attachment portions **291** is disposed on the foot step **290** disposed on the right side, and the other one of the pedal attachment portions **291** is disposed on the foot step **290** disposed on the left side. Each of the pedal attachment portions **291** is constituted of a pair of support plates **291***a*. The pair of support plates **291***a* are arranged to be opposite to each other in the machine width direction K. A pedal shaft **295** is disposed between upper portions of the pair of the support plates **291***a*. A pedal **296**R is supported by one of the pedal shafts **295**, thereby being capable of freely swinging, and a pedal **296**L is supported by the other one of the pedal shafts **295**, thereby being capable of freely swinging. In this manner, the pedals **296**R and **296**L are capable of being pressed by swinging forward and backward.

Each of the support brackets **294** includes a support shaft **297**, the support shaft **297** having an axis extending along the machine width direction K. A first cylindrical member **298** is fitted (engaged) to a right portion of the support shaft **297**, and a second cylindrical member **299** is fitted (engaged) to a left portion of the support shaft **297**. The first cylindrical member **298** is capable of turning about the axis of the support shaft **297**. The second cylindrical member **299** is capable of turning about the axis of the support shaft **297**.

A first link **300** is jointed to the first cylindrical member **298** at one end of the first link **300**. The first link **300** is jointed to a spool of the bucket control valve at the other end of the first link **300**. A second link **301** is jointed to the second cylindrical member **299** at one end of the second link **301**. The second link **301** is jointed to a spool of the boom control valve at the other end of the second link **301**.

In addition, a third link **302** is jointed to the first cylindrical member **298** at one end of the third link **302**. The third link **302** is jointed to the pedal **296**R disposed on the right side at the other end of the third link **302**. A fourth link **303** is jointed to the second cylindrical member **299** at one end of the fourth link **303**. The fourth link **303** is jointed to the pedal **296**L disposed on the left side at the other end of the fourth link **303**.

In this manner, the bucket control valve can be controlled by the pedal **296**R disposed on the right side, the bucket control valve being configured to control the bucket cylinder **15**. In addition, the boom control valve can be controlled by the pedal **296**L disposed on the left side, the boom control valve being configured to control the boom cylinder **14**.

The joint stay **292** joints a front portion of the foot step **290** disposed on the right side to a front portion of the foot step **290** disposed on the left side. A switch valve **304** is attached to a rear surface of the joint stay **292**. The switch valve **304** includes a speed switch valve and a brake switch valve. The speed valve is a valve for switching the travel motors **223**R and **223**L into a low-speed mode and into a high-speed mode. The brake valve is a valve for turning on and off the brakes of the travel motors **223**R and **223**L.

As described above, the support base **286** includes: the attachment portions **287**R and **287**L attached to the bottom frame portion **211** of the machine body **2**; the leg portions **288** standing upward from the attachment portions **287**R and **287**L; and the mount portion **289** disposed on the upper side of the leg portions **288**. And, the support base **286** mounts the operation control valve **245** on the mount portion **289**. In this manner, the operation control valve **245** can be installed being floated (separated upward) from the bottom portion of the machine body **2**, and thereby the operation control valve **245** can be prevented from deposition of mud on the operation control valve **245**.

In addition, the pedals **296**R and **296**L are supported on the support base **286** mounting the operation control valve **245**, the pedals **296**R and **296**L being configured to operate the operation control valve **245**. Accordingly, a joint mechanism for jointing the operation control valve **245** to the pedals **296**R and **296**L can be compactly configured.

Moreover, the operation control valve **245**, the pedals **296**R and **296**L, and the joint mechanism for jointing the operation control valve **245** to the pedals **296**R and **296**L are assembled to the support base **286**, and accordingly the assembled structure can be easily assembled to the machine body **2** in a production line.

As shown in FIG. **1**, FIG. **2**, and FIG. **19**, a circular rim for forming an opening **307** for cleaning (a cleaning opening **307**) is disposed on a corner portion between the front frame portion **210** and the bottom frame portion **211**. In particular, a rim for forming a first opening **308** is formed on the lower plate **225** of the front frame portion **210**, and a rim for forming a second opening **309** is formed on the main plate **226** of the bottom frame portion **211**. The rim for forming the first opening **308** and the rim for forming the second opening **309** are jointed to each other on the corner portion, thereby forming the circular rim for forming the cleaning opening **307**. In other words, the cleaning opening **307** is formed of the first opening **308** and the second opening **309**.

The cleaning opening **307** is closed by a closing plate **310**. The closing plate **310** includes a first portion **311** and a second portion **312**. The first portion **311** closes the first opening **308**. The second portion **312** closes the second opening **309**. The first portion **311** extends upward from a front end of the second portion **312**.

A rear end **312***a* of the second portion **312** is placed on a wall portion **309***a*, the wall portion **309***a* forming the rim of the second opening **309**. As shown in FIG. **2**, the first portion **311** is fixed to the lower plate **225** of the front frame portion **210** by bolts. The closing plate **310** can be moved downward contacting the rear end **312***a* of the second portion **312** to the wall portion **309***a*, that is, centering about the rear end **312***a* when the bolts **375** are detached. The mud deposited on a front portion of the bottom of the machine body **2** can be removed when the closing plate **310** is moved downward.

FIG. **22** shows four steel tubes (four hydraulic pipes), that is, a first steel tube **313**, a second steel tube **314**, a third steel tube **315**, and a fourth steel tube **316**, the four steel tubes being disposed backward from the operation control valve **245**.

The first steel tube **313** and the second steel tube **314** are steel tubes for supplying a hydraulic operation fluid outputted from the boom control valve. The third steel tube **315**

and the fourth steel tube **316** are steel tubes for supplying a hydraulic operation fluid outputted from the bucket control valve. The first steel tube **313** is extended along an inner surface of the transmission case **219**R disposed on the right side, that is, along the third plate member **217** of the transmission case **219**R disposed on the right side. The second steel tube **314** to the fourth steel tube **316** are extended along an inner surface of the transmission case **219**L disposed on the left side, that is, along the third plate member **217** of the transmission case **219**L disposed on the left side.

The first steel tube **313** to the fourth steel tube **316** are extended along the inner surfaces of the transmission cases **219**R and **219**L, the first steel tube **313** to the fourth steel tube **316** being disposed backward from the operation control valve **245**, and thereby the inner surfaces of the transmission cases **219**R and **219**L are efficiently used. In other words, free spaces formed of the inner surfaces of the transmission cases **219**R and **219**L can be efficiently used. Meanwhile, the first steel tube **313** to the fourth steel tube **316** are installed being floated (separated upward) from the bottom portion of the machine body **2**, and thereby the first steel tube **313** to the fourth steel tube **316** can be prevented from deposition of mud on the four steel tubes when the mud is deposited on the bottom portion of the machine body **2**. Hydraulic hoses not shown in the drawings are connected to the second steel tube **314** to the fourth steel tube **316**, the hydraulic hoses are connected to the bucket level control valve **283**. In this manner, the stresses applied in the assembly is released.

FIG. **23** shows three steel tubes (three hydraulic pipes), that is, a fifth steel tube **317**, a sixth steel tube **318**, and a seventh steel tube **319**, the three steel tubes being disposed backward from the operation control valve **245**. The fifth steel tube **317** to the seventh steel tube **319** are steel tubes for supplying a hydraulic operation fluid outputted from the attachment control valve.

The fifth steel tube **317** to the seventh steel tube **319** stand up upward from the operation control valve **245** and extend toward the transmission case **219**L disposed on the left side, and then extend backward along the transmission case **219**L above the transmission case **219**L disposed on the left side. That is, the fifth steel tube **317** to the seventh steel tube **319** extend backward along the transmission case **219**L disposed on the left side, that is, along an upper surface of the fourth plate member **218**.

In addition, the fifth steel tube **317** to the seventh steel tube **319** are attached to a support stay **320** by a clamp **321**, the support stay **320** being fixed on the transmission case **219**L (the fourth plate member **218**) disposed on the left side.

A connection member **317***a*, a connection member **318***a*, and a connection member **319***a* are disposed to end portions of the fifth steel tube **317**, the sixth steel tube **318**, and the seventh steel tube **319**, respectively, each of the connection members **317***a* to **319***a* being configured to be connected to a hydraulic hose. The hydraulic hoses connected to the connection members **317***a* to **319***a* are connected to a hydraulic pressure extraction member **322** through an inside of the boom **10** disposed on the left side from the rear end side of the machine body **2**, the hydraulic pressure extraction member **322** being disposed on a side of an front portion of the boom **10**.

The fifth steel tube **317** to the seventh steel tube **319** are each connected to the corresponding hydraulic hoses above the transmission case **219**L. Accordingly, a working space required for connection and fixation of the hydraulic hoses can be formed, thereby enabling steady assembly of the hydraulic hoses. In addition, the connection members **317***a* to **319***a*, the support stay **320**, and the clamp **321** are disposed above the transmission case **219**L, thereby eliminating bad influence of the mud to the connection members **317***a* to **319***a*, the support stay **320**, and the clamp **321**.

As shown in FIG. **24** to FIG. **26**, a hydraulic operation fluid tank **323** is disposed on an upper surface of the transmission case **219**R disposed on the right side, the hydraulic operation fluid tank **323** being configured to store the hydraulic operation fluid. In particular, a pair of attachment brackets **324**R and **324**F are disposed on the transmission case **219**R disposed on the right side, that is, the pair of attachment brackets **324**R and **324**F are disposed on an upper surface of the fourth plate member **218**. The attachment bracket **324**F, one of the attachment brackets, supports a front surface of the hydraulic operation fluid tank **323**, and the attachment bracket **324**R, the other one of the attachment brackets, supports a rear surface (a back surface) of the hydraulic operation fluid tank **323**. The hydraulic operation fluid tank **323** is disposed on the transmission case **219**R, and thereby a space formed above the transmission case **219**R is efficiently used and thereby an installation place for the hydraulic operation fluid tank **323** is formed.

A fluid filler tube **326** is disposed on an upper portion of the hydraulic operation fluid tank **323**, the fluid filler tube **326** having a fluid filler opening **325**. The fluid filler tube **326** bends toward the support frame **206** disposed on the right side, that is, toward the support wall **229***a*. The support wall **229***a* has an opening **327** for exposing the fluid filler opening **325** outward. In addition, a fluid gauge (an oil gauge) **328** is disposed on the front portion of the hydraulic operation tank **323**, the fluid gauge **328** being used for confirmation of an amount of the hydraulic operation fluid. A visually-checking window **329** is disposed on the upper plate member **213** of the right frame portion **208** of the machine body **2**, the visually-checking window **329** being used for visually checking the fluid gauge **328**. The fluid filler opening **325** and the fluid gauge **328** are placed below the booms **10** under a state where the booms **10** are down to the lowest position. In addition, the fluid filler opening **325** and the fluid gauge **328** are disposed between the front wheel **5**F and the rear wheel **5**R.

The opening **327** and the visually-checking window **329** are disposed on the machine body **2**, and the fluid filler opening **325** and the fluid gauge **328** are disposed below the booms **10** under the state where the booms **10** are down to the lowest position. Accordingly, the fluid level and the fluid gauge **328** can be arbitrarily checked. In particular, the fluid filler opening **325** and the fluid gauge **328** are disposed between the front wheel **5**F and the rear wheel **5**R. Thus, the operator can approach the machine body **2** from a space between the front wheel **5**F and the rear wheel **5**R. Moreover, the operator can easily fill the fluid, checking the fluid gauge **328**.

In addition, considering a case where the hydraulic operation tank **323** is disposed in the bonnet **530**, the fluid level and the fluid gauge **328** cannot be confirmed without opening the bonnet **530**. And, if there is no space for opening the bonnet **530**, the fluid level and the fluid gauge **328** cannot be confirmed. However, the embodiment does not have the above-mentioned problems that interfere the confirmation of the fluid level and the fluid gauge **328**.

As shown in FIG. **25** and FIG. **26**, a pair of gas springs **330** are disposed on the transmission case **219**L not mounting the hydraulic operation tank **323**, of the transmission case **219**R disposed on the right side and the transmission

case **219**L disposed on the left side. That is, the pair of gas springs **330** are arranged on the transmission case **219**L, the transmission case **219**L being disposed on a side opposite to the hydraulic operation tank **323**. The pair of gas springs **330** are arranged along the machine width direction K. Further in other words, the hydraulic operation tank **323** is disposed on one of the pair of transmission cases **219**R and **219**L, and the pair of the gas springs **330** are disposed on the other one of the transmission cases **219**R and **219**L.

The gas springs **330** is stretched to assist the swinging of the cabin **3** in lifting-up of the cabin **3** centering about the pivot shaft **238**. In addition, the cabin **3** is held to be lifted up when the gas springs **330** fully are stretched. A first support stay **331** is fixed to the upper surface of the fourth plate member **218** of the transmission case **219**L. One first pin **332** is disposed on the first support stay **331**. Lower portions (lower end portions) of the pair of the gas springs **330** are pivotally supported by the first pin **332**. Upper portions (upper end portions) of the pair of the gas springs **330** are pivotally supported on a second support stay **333** by one second pin **334**, the second support stay **333** being fixed to a lower rear portion of the cabin **3**.

The gas springs **330** are disposed on one of the transmission cases **219**R and **219**L, and thereby the space formed above the corresponding one of the transmission cases **219**R and **219**L is efficiently used and thereby an installation place for the gas springs **330** is formed. Two of the gas springs **330** are disposed, thereby one of the gas springs **330** can support the cabin **3** even when the other one of the gas springs **330** is broken. In addition, two of the gas springs **330** are disposed on one side (on the left side in the embodiment), thereby sharing the first support stay **331**, the second support stay **333**, the first pin **332**, and the second pin **334** to reduce the number of the parts (components).

As shown in FIG. **27** and FIG. **28**, the gas spring **330** may be provided with a restriction member **335**. The restriction member **335** is a member for restricting the stretching and shortening of the gas springs **330** when the gas springs **330** are stretched to the maximum extent. The restriction member **335** includes a main body **336**, a spring member **337**, and a handle **338**.

The main body **336** includes an upper wall **336***a*, a side wall **336***b*, a front wall **336***c*, and a rear wall **336***d*.

The upper wall **336***a* includes: a first portion (not shown in the drawings) configured to be fitted into a tube **330***a* of the gas spring **330**; and a second portion (not shown in the drawings) configured to be fitted into a rod **330***b* of the gas spring **330**. An lower end of the side wall **336***b* is pivotally supported by the first pin **332** disposed on an lower end of the gas spring **330**.

The spring member **337** is arranged between the front wall **336***c* and the tube **330***a*. The spring member **337** presses the main body **336** to a direction shown by an arrowed line G**1** so that the side wall **336***b* can be close to the tube **330***a*. The handle **338** is disposed on the upper wall **336***a*.

In the restriction member **335**, the upper wall **336***a* slides on the tube **330***a* when the gas spring **330** is stretched. As shown in FIG. **21**, when the gas springs **330** are stretched to the maximum extent, the main body **336** swings in the direction shown by the arrowed line G**1** since the main body **336** is pressed by the spring member **337** toward the direction shown by the arrowed line G**1**. Thus, the second portion of the upper wall **336***a* is fitted to the rod **330***d*.

In this manner, the upper wall **336***a* can contact to a lower end portion of the tube **330***a*, thereby restricting the shortening of the gas spring **330**. The second portion of the upper wall **336***a* can be detached from the rod **330***b* when the handle **338** is pinched to swing the main body **336** in a direction shown by an arrowed line G**2**. That is, when the main body **336** is swung in the direction shown by the arrowed line G**2**, the swing releases the restriction of the stretching and shortening of the gas spring **330**.

Accordingly, the restriction member **335** is capable of having two positions; one of the two positions is a restricting position where the second portion is fitted to the rod **330***b* of the gas spring **330**, and the other one of the two positions is an allowance position where the second portion is detached from the rod **330***b*. And, the restriction member **335** contacts to the gas spring **330** to restrict the stretching and shortening of the gas spring **330** at the restricting position, and allows the stretching and shortening of the gas spring **330** at the allowance position. In this manner, the cabin **3** can be held to be lifted up by the restriction member **335** even when the gas spring **330** fails to hold the stretching due to a force applied to the gas spring **330** toward the direction of the shortening.

In the above description, the embodiment of the present invention has been explained. However, all the features of the embodiment disclosed in this application should be considered just as examples, and the embodiment does not restrict the present invention accordingly. A scope of the present invention is shown not in the above-described embodiment but in claims, and is intended to include all modifications within and equivalent to a scope of the claims.

What is claimed is:

1. A working machine comprising:
an operator seat disposed on a machine body;
a floor step disposed below and anteriorly to the operator seat;
a first operation lever disposed to right of the operator seat;
a second operation lever disposed to left of the operator seat;
a first cover arranged below the operator seat and above the floor step and attached to the machine body;
a hinge disposed on a front end of the first cover;
a second cover extending downward from the first cover toward the floor step, the second cover being jointed to the hinge and attached to the machine body;
each of the first operation lever and the second operation lever comprising:
a portion positioned above the first cover; and
another portion positioned below the first cover.

2. The working machine according to claim **1**, wherein:
the second cover separates a space where the floor step is arranged from a space disposed below the operator seat and below the first cover.

3. The working machine according to claim **1**, wherein:
at least one of the first cover and the second cover comprises:
a first plate and a second plate; and
a plate shape forming a space for housing air between the first plate and the second plate.

4. The working machine according to claim **1**, wherein:
the hinge is formed of a portion connected to the first cover and the second cover, the portion having a thickness thinner than thicknesses of the first cover and the second cover.

5. The working machine according to claim **1**, wherein:
the first cover comprise a first main cover portion, the operator seat being arranged on the first main over portion; and
the first main cover portion comprises:
an upper wall; and

a lower wall arranged below the upper wall and spaced from the upper wall, the upper wall and the lower wall being connected at right portions, left portions, front portions, and rear portions of the upper wall and the lower wall to each other;

the first main cover portion having a plate shape forming a space for housing air between the upper wall and the lower wall.

6. The working machine according to claim **5**, wherein:

the second cover comprises a second main cover portion extending downward from a front portion of the first main cover portion along a vertical direction;

the second main cover portion comprises:

a front wall; and

a rear wall arranged behind the front wall and spaced from the front wall, the front wall and the rear wall being connected at right portions, left portions, front portions, and rear portions of the front wall and the rear wall to each other;

the second main cover portion having a plate shape forming a space for housing air between the front wall and the rear wall; and

an upper end of the second main cover portion being connected by the hinge to a front end of the first main cover portion.

7. The working machine according to claim **6**, wherein:

the first cover further comprises:

a first extending portion having a plate shape, the first extending portion protruding rightward from the first main cover portion and being attached to the machine body; and

a second extending portion having a plate shape, the second extending portion protruding leftward from the first main cover portion and being attached to the machine body;

the second cover further comprises:

a first attachment portion having a plate shape, the first attachment portion being provided on a right side of the second main cover portion and being attached to the machine body; and

a second attachment portion having a plate shape, the second attachment portion being provided on a left side of the second main cover portion and being attached to the machine body.

8. The working machine according to claim **7**, wherein:

the first extending portion comprises:

an edge portion forming a first through hole, the first operation lever being inserted through the first through hole from an upper end of the first operation lever; and

the second extending portion comprises:

an edge portion forming a second through hole, the second operation lever being inserted through the second through hole from an upper end of the second operation lever.

9. A working machine comprising:

a machine body;

an actuator;

a control valve to control a hydraulic operation fluid, the hydraulic operation fluid being used for operating the actuator;

a support base disposed on a front side of the machine body; and

a pedal disposed to left and another pedal disposed to right each configured to operate the control valve;

the support base comprising:

an attachment portion disposed to left and another attachment portion disposed to right each attached to a bottom portion of the machine body, the attachment portions being arranged being separated from each other in a machine width direction;

a leg portion disposed to left standing upward from the attachment portion disposed to left;

another leg portion disposed to right standing upward from the attachment portion disposed to right;

a mount portion configured to mount the control valve, the mount portion being connected to an upper end of the attachment portion disposed to left and to an upper end of the attachment portion disposed to right;

a pedal attachment portion disposed to left to which the pedal disposed to left is attached, the pedal attachment portion being disposed above the attachment portion disposed to left; and

a pedal attachment portion disposed to right to which the pedal disposed to right is attached, the pedal attachment portion being disposed above the attachment portion disposed to right; and

the control valve being arranged between the pedal attachment portion disposed to left and the pedal attachment portion disposed to right in a machine width direction and below the pedal attachment portion disposed to left and the pedal attachment portion disposed to right.

10. The working machine according to claim **9**, wherein:

the support base further comprising:

a support bracket disposed to left fixed to the attachment portion disposed to left;

another support bracket disposed to right fixed to the attachment portion disposed to right;

a foot step disposed to left fixed to the support bracket disposed to left; and

another foot step disposed to right fixed to the support bracket disposed to right;

the pedal attachment portion disposed to left being provided on the foot step disposed to left;

the pedal attachment portion disposed to right being provided on the foot step disposed to right.

11. The working machine according to claim **9**, further comprising:

a support shaft having an axis extending along the machine width direction;

a first cylindrical member and a second cylindrical member configured to turn about the axis of the support shaft;

the first cylindrical member being arranged below the pedal disposed to right and linked with the pedal disposed to right;

the second cylindrical member being arranged below the pedal disposed to left and linked with the pedal disposed to left; and

a link jointing the control valve to the first cylindrical member and the second cylindrical member.

12. The working machine according to claim **9**, further comprising:

an operator seat mounted on the machine body; and

a floor step disposed in front of the operator seat, the floor step comprising:

a foot step disposed to left;

another foot step disposed to right; and

a center step arranged between the foot step disposed to left and the foot step disposed to right;

the mount portion of the support base being disposed below the center step.

13. The working machine according to claim **9**, further comprising:

a travel device; and

a transmission case to house the motive power transmission device for transmitting a motive power to the travel device, the transmission case being disposed inside the machine body;

the transmission case comprising:

a transmission case disposed to a left portion of the machine body; and

another transmission case disposed to a right portion of the machine body;

the control valve being mounted on the mount portion below the pedals between the transmission case disposed to the left portion and the transmission case disposed to the right portion.

14. The working machine according to claim **9**, further comprising:

a cabin mounted on the machine body;

a boom disposed outward from the cabin in a machine outward direction and extending forward from behind the cabin; and

an operation tool disposed on a tip portion of the boom.

* * * * *