UNITED STATES PATENT AND TRADEMARK OFFICE

BEFORE THE PATENT TRIAL AND APPEAL BOARD

KUBOTA NORTH AMERICA CORPORATION,
Petitioner,

v.

VERMEER MANUFACTURING COMPANY,
Patent Owner.

IPR2025-00167
U.S. Patent No. 9,321,386 B1

PETITIONER'S NOTICE OF APPEAL TO THE UNITED STATES COURT OF APPEALS FOR THE FEDERAL CIRCUIT

via P-TACTS
Patent Trial and Appeal Board

via Email
Director of the United States Patent and Trademark Office
efileSO@uspto.gov

via CM/ECF
United States Court of Appeals for the Federal Circuit

Pursuant to 28 U.S.C. § 1295(a)(4)(A), 35 U.S.C. §§ 141(c), 142, and 319, and 37 C.F.R. §§ 90.2(a), 90.3, 5 U.S.C. §§ 701–706, and Federal Circuit Rule 15(a)(1), Petitioner Kubota North America Corporation ("Petitioner") provides notice that it appeals to the United States Court of Appeals for the Federal Circuit from the Final Written Decision of the Patent Trial and Appeal Board ("Board") entered June 8, 2026 (Paper 62) (public version at Paper 64), and from all underlying and related orders, decisions, rulings, and opinions regarding U.S. Patent No. 9,321,386 B1 ("the '386 patent") in *Inter Partes* Review IPR2025-00167.

In accordance with 37 C.F.R. § 90.2(a)(3)(ii), the expected issues on appeal include, but are not limited to: the Board's error(s) in determining that Petitioner has failed to demonstrate that challenged claims 15, 17, 19, 20, 23–30, 66 and 67 of the '386 patent are unpatentable, and any finding or determination supporting or related to those determinations, as well as all other issues decided adversely to Petitioner in any orders, decisions, rulings, or opinions in *Inter Partes* Review IPR2025-00167.

Pursuant to 35 U.S.C. § 142 and 37 C.F.R. § 90.2(a), this Notice is being filed with the Director of the United States Patent and Trademark Office and with the Patent Trial and Appeal Board. In addition, a copy of this Notice and the required docketing fees are being filed with the Clerk's Office for the United States Court of Appeals for the Federal Circuit via CM/ECF.

Respectfully submitted,

Dated: August 10, 2026

/David M. O'Dell/
David M. O'Dell
Counsel for Petitioner
Registration No. 42,044

HAYNES AND BOONE, LLP
2801 N. Harwood Street, Suite 2300
Dallas, TX 75201
Email: david.odell.ipr@haynesboone.com
Phone: (972) 739-8635

CERTIFICATE OF FILING

The undersigned hereby certifies that, in addition to being electronically filed through PTAB P-TACTS, a true and correct copy of the above-captioned PETITIONER'S NOTICE OF APPEAL TO THE UNITED STATES COURT OF APPEALS FOR THE FEDERAL CIRCUIT is being filed by email with the Director on August 10, 2026 at efileSO@uspto.gov.

The undersigned also hereby certifies that a true and correct copy of the above-captioned PETITIONER'S NOTICE OF APPEAL TO THE UNITED STATES COURT OF APPEALS FOR THE FEDERAL CIRCUIT and the filing fee is being filed via CM/ECF with the Clerk's Office of the United States Court of Appeals for the Federal Circuit on August 10, 2026.

Respectfully submitted,

Dated: August 10, 2026

/David M. O'Dell/
David M. O'Dell
Counsel for Petitioner
Registration No. 42,044

CERTIFICATE OF SERVICE

Pursuant to 37 C.F.R. § 42.6, this is to certify that a true and correct copy of the foregoing "Petitioner's Notice of Appeal to the United States Court of Appeals for the Federal Circuit" was served on counsel for Patent Owner as detailed below:

Date of service: August 10, 2026

Manner of service: Email: rbrophy@atllp.com
mvandertuig@atllp.com
mvandermolen@atllp.com

Documents served: ***PETITIONER'S NOTICE OF APPEAL TO THE UNITED STATES COURT OF APPEALS FOR THE FEDERAL CIRCUIT***

Persons served: Richard L. Brophy
Marc Vander Tuig
Michael J. Vander Molen
ARMSTRONG TEASDALE LLP
7700 Forsyth Boulevard Suite 1800
Saint Louis, Missouri 63105

Respectfully submitted,

/David M. O'Dell/
David M. O'Dell
Counsel for Petitioner
Registration No. 42,044

Trials@uspto.gov
571-272-7822

Paper 62
Date: June 8, 2026

UNITED STATES PATENT AND TRADEMARK OFFICE

BEFORE THE PATENT TRIAL AND APPEAL BOARD

KUBOTA NORTH AMERICA CORPORATION,
Petitioner,

v.

VERMEER MANUFACTURING COMPANY,
Patent Owner.

IPR2025-00167
Patent 9,321,386 B1

Before MEREDITH C. PETRAVICK, ANNETTE R. REIMERS, and ERIC C. JESCHKE, *Administrative Patent Judges.*

PETRAVICK, *Administrative Patent Judge*.

JUDGMENT
Final Written Decision
Determining Some Challenged Claims Unpatentable
Granting in Part Petitioner's Motion to Exclude
Denying Patent Owner's Motion to Exclude
35 U.S.C. § 318(a)

I. INTRODUCTION

A. Background and Summary

Kubota North America Corporation ("Petitioner") filed a Petition requesting *inter partes* review of claims 1–13, 15, 17, 19–30, and 64–67 of U.S. Patent No. 9,321,386 B1[1] (Ex. 1001, "the '386 patent"). Paper 3 ("Pet."). On June 10, 2025, we instituted *inter partes* review. Paper 16 ("Dec. Inst.").

Following institution, Patent Owner filed a Response (Paper 23[2], "PO Resp."), Petitioner filed a Reply (Paper 33, "Pet. Reply"), and Patent Owner filed a Sur-reply (Paper 37, "PO Sur-reply"). An oral argument in this proceeding was held on March 19, 2026, and a copy of the transcript was entered into the record. Paper 60 ("Tr.").[3]

We have jurisdiction under 35 U.S.C. § 6, and we issue this Final Written Decision under 35 U.S.C. § 318(a) and 37 C.F.R. § 42.73.

For the reasons explained in our analysis below, we determine that Petitioner has shown by a preponderance of the evidence that claims 1–13, 15, 17, 19–30, and 64–67 of the '386 patent are unpatentable and has failed to show by a preponderance of the evidence that claims 15, 17, 19, 20, 23–30, 66, and 67 are unpatentable.

---

[1] The '386 patent is amended by two *ex parte* Reexamination Certificates ("Reexam. Cert."). Ex. 1001. Claims 1–14 and 20 can be found in the original patent; claims 15, 17, 19, 22–45, and 47–63 can be found in the first reexamination certificate ("Reexam. Cert. C1"); claims 21, 46, and 64–87 can be found in the second reexamination certificate ("Reexam. Cert. C2"). Claims 16 and 18 have been canceled.

[2] We cite to the redacted public version of the Patent Owner's Response.

[3] Paper 61 is a public version of the transcript.

B. Real Parties-in-Interest

Petitioner identifies Kubota North America Corporation and Kubota Tractor Corporation as the real parties-in-interest. Pet. 95.

Patent Owner identifies Vermeer Manufacturing Company as a real party-in-interest. Paper 4, 2.

C. Related Matters

The parties identify the following related court proceedings: *Vermeer Manufacturing Company vs. Kubota North America Corporation and Kubota Tractor Corporation*, Case No. 4:24-cv-00799-P (NDTX) ("the Parallel Litigation") and *Vermeer Corporation vs. The Toro Company*, Case No. 4:17-cv-00076 (SDIA) (terminated) ("the Iowa Litigation"). Pet. 95; Paper 4, 2.

The '386 patent is also the subject of IPR2025-00168 and IPR2025-00169. The parties also identify the following additional related *inter partes* reviews: IPR2025-00170, IPR2025-00171, IPR2025-00381, and PGR2025-00016. Pet. 96; Paper 8, 2.

D. The '386 Patent

The '386 patent is titled "Low Profile Compact Tool Carriers" and issued on April 26, 2016. Ex. 1001, codes (45), (54). A compact tool carrier is a self-propelled machine that carries interchangeable equipment and generally has a mass of less than about 1500 kg. *Id.* at 2:59–63.

The ’386 patent’s Figure 3, with Patent Owner’s annotations, is reproduced below. PO Resp. 9.

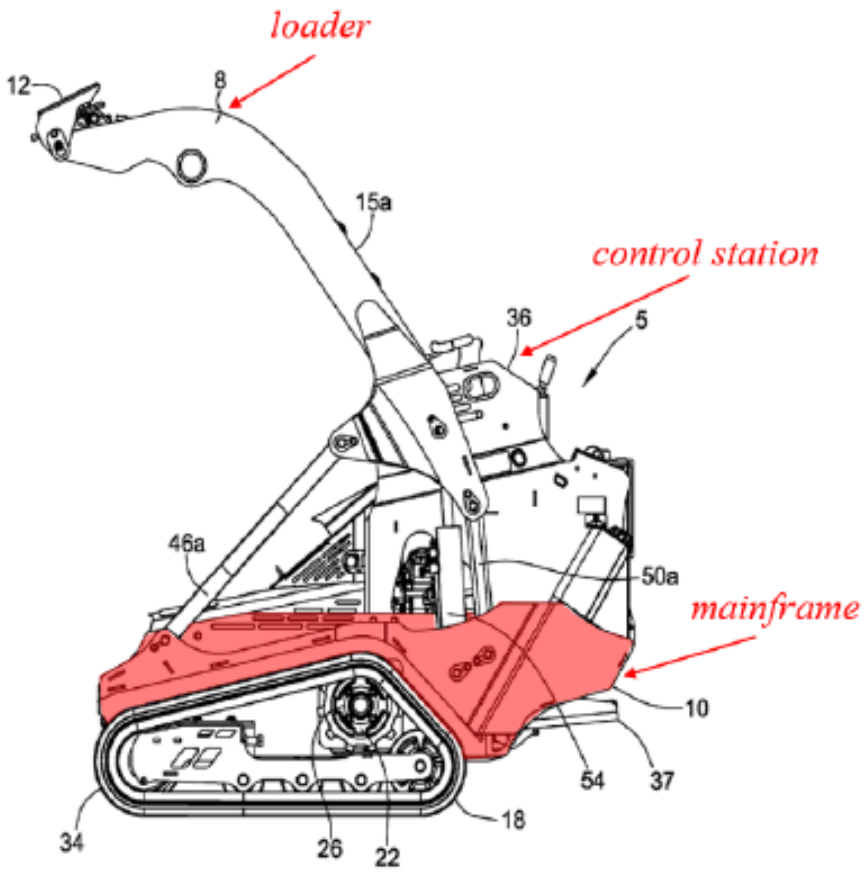

Annotated Figure 3 depicts a side view of compact tool carrier 5 with raised loader 8. Ex. 1001, 2:29–30. Mainframe 10 (shaded red) supports loader 8 and mounts drive mechanism 18. *Id.* at 2:45–46, 3:20–21. Loader arm 15a is pivotally connected to side 38a of mainframe 10 by forward linkage 46a, rear linkage 50a, and actuator 54. *Id.* at 4:25–39. By positioning the pivot points relatively low on mainframe 10, compact tool carrier 5’s height and mass are reduced and, thus, the cost is reduced. *Id.* at 5:60–64. Keeping the profile of mainframe 10 low improves stability by

lowering the center of gravity and improves visibility for the operator. *Id.* at 5:64–67.

Compact tool carrier 5 also has a control station 36 for driving compact tool carrier 5 and raising and lowering loader 8 (*id.* at 3:31–35) and an engine mounted to mainframe 10 by a bracket (*id.* at 5:52–55).

E. Illustrative Claim

Petitioner challenges claims 1–13, 15, 17, 19–30, and 64–67 of the ’386 patent. Of the challenged claims, claims 1 and 15 are independent, claims 2–13, 21, 22, 64, and 65 depend from claim 1 and claims 17, 19, 20, 23–30, 66, and 67 depend from claim 15.

Claims 1 and 15 are illustrative and reproduced below, with limitation labels added.

> 1. [1.0] A compact tool carrier configured for standing or walk-behind operator control and having a longitudinal axis and a mass of less than about 1500 kg, the compact tool carrier comprising:
>
> [1.1] a loader having an arm, the loader being adapted to carry a tool;
>
> [1.2a] a mainframe for supporting the loader, the mainframe having a first side and a second side, and having a front end and a rear end relative to the longitudinal axis, [1.2b] the mainframe comprising an engine bracket that extends from the first side toward the second side for mounting an engine to the mainframe, the engine bracket being spaced from the rear end of the mainframe, [1.2c] the loader arm not being directly attached to the mainframe;
>
> [1.3] a linkage pivotally attached to the first side of the mainframe and pivotally attached to the loader arm;

[1.4] an actuator pivotally attached to the first side of the mainframe and pivotally attached to the loader arm; and

[1.5] a control stations having operator controls for propelling the compact tool carrier forward and for raising and lowering the loader, the control station being mounted toward the rear of the compact tool carrier and adapted to allow for standing or walk-behind operation.

Ex. 1001, 6:34–56.

15. [15.0] A compact tool carrier comprising:

[15.1] a loader adapted to carry a tool;

[15.2a] a mainframe for supporting the loader, the mainframe having a first side and a second side, and having a front end and a rear end relative to the longitudinal axis, [15.2b] the mainframe comprising an engine bracket that extends from the first side toward the second side for mounting an engine to the mainframe, the engine bracket being spaced from the rear end of the mainframe, [15.2c] each side having a top and a bottom, the first side of the mainframe having at least two pivot points relative to the loader, [15.d] the loader not being directly attached to the mainframe;

[15.3] a linkage pivotally attached to the first side of the mainframe at a pivot point and pivotally attached to the loader;

[15.4] an actuator pivotally attached to the first side of the mainframe at a pivot point and pivotally attached to the loader;

[15.5a] a drive mechanism comprising tracks or wheels for propelling the compact tool carrier over a supporting surface, the drive mechanism being attached to the mainframe about a rotational axis, the compact tool carrier having a bottom at which the drive mechanism contacts the supporting surface, [15.5b] the rotational axis and bottom of the compact tool carrier being separated by a vertical distance Dl, the rotational axis and the bottom of the first side of the mainframe being

separated by a vertical distance D5, the rotational axis and the pivot point at which the linkage is attached to the mainframe being separated by a vertical distance D2, the rotational axis and the pivot point at which the actuator is attached to the mainframe being separated by a vertical distance D4, D2 and D4 each being less than 1.5 times Dl and each being less than twice D5; and

[15.6] a control station having operator controls for propelling the compact tool carrier forward and for raising and/or lowering the loader, the control station being mounted toward the rear of the compact tool carrier and adapted to allow for standing or walk-behind operation.

Id. at Reexam. Cert. C1 2:36–3:10.

F. Asserted Grounds and Evidence

Petitioner asserts that claims 1–13, 15, 17, 19–30, and 64–67 would have been unpatentable on the following grounds:

Claims Challenged	35 U.S.C. §	Basis
1–13, 21, 22, 64	103	KR996[4], JP705[5]
65	103	KR996, JP705, McIlwraith[6]
15, 17, 19, 20, 23–30, 66, 67	103	KR996, JP705, Beltrami[7]

Pet. 20.

Petitioner relies on the declaration testimony of Dr. Steven Alan Velinsky, Ph.D., P.E., filed with the Petition (Ex. 1003, "Velinsky Pet. Decl.") and on the Second Declaration of Dr. Velinsky, filed with the Reply

[4] Korean Patent No. 10-1041996, publ. June 16, 2011 (Ex. 1005). We refer to the English language translation, which is part of Exhibit 1005.
[5] Japanese Patent No. JP2004-17705A, publ. Jan. 22, 2004 (Ex. 1006). We refer to the English language translation, which is part of Exhibit 1006.
[6] U.S. Patent No. 6,397,967 B1, iss. June 4, 2002 (Ex. 1007).
[7] U.S. Patent No. 3,586,195, iss. June 22, 1971 (Ex. 1008).

(Ex. 1042, "Velinsky Reply Decl."). Patent Owner relies on the declaration testimony of Dr. Mark Fleming, Ph.D., P.E., filed with the Patent Owner's Response. Ex. 2016 ("Fleming Decl.").[8]

II. PATENT OWNER'S MOTION TO EXCLUDE

A. Background

Patent Owner filed a Motion to Exclude (Paper 44, "PO Mot.") seeking to exclude Petitioner's Exhibits 1005, 1006, 1011, and 1014, which are English language translations of exhibits in either Korean or Japanese. Patent Owner contends Exhibits 1005, 1006, and 1014 should be excluded because the corresponding certificates of translation do not comply with 37 C.F.R. § 42.63(b) and fail to comply with Federal Rules of Evidence ("FRE") 602 and 604. *See* PO Mot. 2–6; *see also* Paper 50 (Patent Owner's Reply in Support of its Motion to Exclude, "PO Mot. Reply"). Patent Owner additionally seeks to exclude Exhibit 1011 because it is an English language translation that was not filed with a certificate of translation, as required by Rule § 42.63(b). PO Mot. 6–7. Petitioner opposes Patent Owner's Motion to Exclude. *See* Paper 48 ("Pet. Mot. Opp.").

After considering all of Patent Owner's and Petitioner's arguments, for the reasons discussed below, we deny Patent Owner's request to exclude Exhibits 1005, 1006, and 1014 and we determine that Patent Owner's request to exclude Exhibit 1011 is moot.

[8] Exhibit 2016 is also a public version of Dr. Fleming's Declaration.

B. Analysis

"The moving party has the burden of proof to establish that it is entitled to the requested relief." 37 C.F.R. § 42.20.

1. Exhibits 1005, 1006, and 1014

Exhibit 1005 is an English language translation of Korean Patent No. 10-1041996. Exhibit 1006 is an English language translation of Japanese document JP2004-17705A. Exhibit 1014 is an English language translation of Korean Patent No. 10-1023528. A Certification of Translation signed by Takashi Maeshiro of HC Language Solutions, Inc., accompanies each of Exhibits 1005, 1006, and 1014. Ex. 1005 at 28; Ex. 1006 at 16; Ex. 1014 at 16. Each Certification of Translation is worded substantially the same except for the references to the document at issue and the source language being either Korean or Japanese. Exhibit 1005's Certification of Translation, for example, states:

> I, Takashi Maeshiro, on behalf of HC Language Solutions, Inc., do solemnly and sincerely declare, *to the best of my knowledge and belief*, that the attached text represents a translation of Korean Patent No. 10-1041996, that the translation was performed by HC Language Solutions, Inc., and that the translation represents a true, correct, and faithful translation from Korean to English in a form that reflects the intention and meaning of the original text.
>
> I hereby declare that all statements made herein of my own knowledge are true and *that all statements made on information and belief are believed to be true*; and further that these statements were made with the knowledge that willful false statements and the like so made are punishable by fine or imprisonment, or both, under Section 1001 of Title 18 of the United States Code.

Ex. 1005 at 28 (emphasis added).

Patent Owner argues that the Certifications of Translation do not comply with 37 C.F.R. §§ 1.68 and 42.63(b) because they "must be based on the affiant's personal knowledge and signed under penalty of perjury." PO Mot. 3; *see also id.* at 1–6; PO Mot. Reply 1–2. Patent Owner alleges that the Certifications of Translation are deficient because Takashi Maeshiro does not state that he "personally performed the translation, that he speaks the source language, or that he otherwise has the skills necessary to confirm each translation's accuracy." PO Mot. 4.

Rule 42.63 states: "When a party relies on a document or is required to produce a document in a language other than English, a translation of the document into English and *an affidavit attesting to the accuracy of the translation must be filed with the document*." 37 C.F.R. § 42.63 (emphasis added). Under our rules, the term "affidavit" is defined to include a declaration in lieu of an oath under rule 1.68. 37 C.F.R. § 42.2. Rule 1.68 allows for a declaration in lieu of an oath and states: "The declarant must set forth in the body of the declaration that all statements made of the declarant's own knowledge are true and that all statements made on information and belief are believed to be true."

Thus, our rules do not require attestation by a translator, or by a person who speaks the source language and has personally confirmed the accuracy of the translation. Further, our rules do not preclude attestation, for example, by an employee of a translation company based on information or belief. The phrase "[t]o the best of my knowledge and belief" in the Certifications of Translation indicates that Takashi Maeshiro may be attesting to the accuracy based on information and belief and not based solely on personal knowledge of the translation. *See, e.g.*, Ex. 1005.

Patent Owner submitted Takashi Maeshiro's LinkedIn page (Ex. 2046[9]) as evidence that he speaks Japanese but not Korean. PO Mot. 4–5. Patent Owner argues that Takashi Maeshiro's lack of ability to speak Korean undermines the veracity of the attestation in the Certifications of Translation for Exhibits 1005 and 1014, the Korean language translations, and, by extension, the attestation in the Certification of Translation for Exhibit 1006, the Japanese language translation. *Id.*

The LinkedIn page is silent as to whether or not Takashi Maeshiro speaks Korean. Ex. 2046. That silence does not lead to the conclusion that his Certifications of Translation fail to satisfy the requirement of 37 C.F.R. § 42.63(b). Nor does that silence sufficiently call into question his attestation that, based on information and belief, "the translation represents a true, correct, and faithful translation from Korean to English." *See, e.g.*, Ex. 1005 at 5.

Patent Owner cites to *Google LLC v. 138 East LCD Advancements Ltd.*, IPR2024-00958, Paper 43 at 53 (PTAB Dec. 18, 2025) (non-

---

[9] In its Opposition, Petitioner includes a section titled "Patent Owner's EX2046 Should be Excluded" in which Petitioner "moves to exclude Patent Owner's EX2046." Pet. Mot. Opp. 11 (emphasis omitted). Petitioner contends that, during a February 23, 2026 conference call, the Board authorized a motion to exclude Exhibit 2046 as part of its Opposition. *Id.* We disagree. During the conference call, we explicitly denied Petitioner's request to file a motion to exclude Exhibit 2046, but we indicated that Petitioner could discuss in its Opposition to this Motion its concerns about the sufficiency of Exhibit 2046. We will not issue a decision on Petitioner's untimely motion to exclude Exhibit 2046. Pet. Mot. Opp. 11–12. In any event, we note that any motion by Petitioner to exclude Exhibit 2046 would be moot as we have denied Patent Owner's Motion here, finding Exhibit 2046 to be unpersuasive.

precedential) ("*Google*") and argues that the Board has excluded other English language translations due to a deficient certificate of translation attestation. PO Mot. 5–6; PO Mot. Reply 4–5.

Patent Owner's argument is unpersuasive because the circumstances here are not sufficiently similar to those in *Google*. *See* Pet. Mot. Opp. 6–7. In *Google,* a translation certification was signed by a project manager of a translation company, who attested to the following: "To the best of my knowledge, the aforementioned documents are a true, full and accurate translation of the specified documents." IPR2024-00958, Ex. 2003. The Board determined that the project manager's attestation was based on personal knowledge of the translation, that other evidence indicated that the project manager did not speak the source language, and that, when requested, the project manager was not made available for deposition as to the translation. *Google*, Paper 43 at 53–58. On the facts there, the Board excluded the translations, determining that, because the affiant was not made available for deposition, the opposing party was "unable to question the affiant and cannot directly test the affiant's veracity or challenge the affiant's basis for making the statements in the affidavit," which "contravenes 37 C.F.R. § 42.63(b) (2015) and the Board's Trial Practice Guide." *Google*, Paper 43 at 57–58. Thus, in *Google*, the Board did not exclude the English language translation based on the alleged deficiencies in the certificate of translation alone. Instead, the Board excluded the English language translation because the veracity of the project manager's attestation was in question and because the project manager was not made available for a deposition when requested.

In contrast, here, Patent Owner makes no allegation that the translations, themselves, are inaccurate, nor does the Patent Owner provide an alternate translation to show that Exhibits 1005, 1006, and 1014 translations are inaccurate. *See* Pet. Mot. Opp. 2–3. Patent Owner did not seek to depose Takashi Maeshiro about the Certifications of Translation. *Id.*

We are not persuaded by Patent Owner that the Certifications of Translation are deficient and do not comply with 37 C.F.R. §§ 1.68 and 42.63(b).

Based on its argument that a certificate of translation must be made by the translator, Patent Owner also argues that Exhibits 1005, 1006, and 1014 should be excluded under FRE 602 and 604. *See generally* PO Mot. 1–6.

Rule 42.62 states: "Except as otherwise provided in this subpart, the Federal Rules of Evidence shall apply to a proceeding." 37 C.F.R. § 42.62. Federal Rule of Evidence 604 states: "An interpreter must be qualified and must give an oath or affirmation to make a true translation." And FRE 602 states: "A witness may testify to a matter only if evidence is introduced sufficient to support a finding that the witness has personal knowledge of the matter. Evidence to prove personal knowledge may consist of the witness's own testimony."

Patent Owner does not persuade us that FRE 602 and FRE 604 apply to the circumstances here, where Rule 42.63(b) does not require an attestation by the translator (i.e., an interpreter) and does not preclude an attestation by an employee of a translation company, such as Takashi Maeshiro.

For the reasons above, we deny Patent Owner's Motion to Exclude as to Exhibits 1005, 1006, and 1014.

2. Exhibit 1011

Exhibit 1011 is an English language translation of Japanese Document No. 11-140900, which was not accompanied by a certificate of translation. Exhibit 1011 is machine-generated translation from the European Patent Office's website Espacenet.com, and it states "[i]t cannot be guaranteed that [the translation] is intelligible, accurate, complete, reliable or fit for specific purposes." Exhibit 1011 at 1–2.

Patent Owner seeks to exclude Exhibit 1011 for being a translation filed without an affidavit attesting to the accuracy of the translation as required by 37 C.F.R. § 42.63(b). PO Mot. 6–7; PO Mot. Reply 5. Patent Owner does not allege that Exhibit 1011 is an inaccurate translation and did not provide an alternative translation of Exhibit 1011. *Id.*

Patent Owner's request to exclude Exhibit 1011 is moot because we do not rely upon Exhibit 1011 in reaching our patentability determination in this proceeding.

III. PETITIONER'S MOTION TO EXCLUDE

A. Background

Petitioner filed a Motion to Exclude seeking to exclude certain aspects of Patent Owner's exhibits. *See* Paper 43 ("Pet. Mot."); *see also* Paper 49 (Petitioner's Reply in Support of its Motion to Exclude, "Pet. Mot. Reply"). Patent Owner opposes Petitioner's Motion. *See* Paper 46 ("PO Mot. Opp."). Below, we address the issues raised as to Petitioner's Motion to Exclude.

B. Analysis

1. Embedded Documents and Deposition Testimony

Exhibits 1029, 1030, and 1031 are portions of the prosecution histories of Reexamination Control Nos. 90/013,915; 90/014,109; and 90/014,124, respectively. Patent Owner's arguments concerning objective indicia of nonobviousness in this proceeding cite to attorney argument concerning objective indicia of nonobviousness in these prosecution histories. *See* PO Resp. 62–81. For example, Patent Owner cites to a Supplemental Response to Office Action, found on pages 30–56 of Exhibit 1030. *See, e.g.*, PO Resp. 69 (citing Ex. 1030, 39–41). As another example, Patent Owner cites to a slide presentation concerning objective indicia. *See, e.g.*, PO Resp. 66 (citing Ex. 1029, 185). Embedded in the prosecution attorney argument are citations, quotes, reproduced charts, and other references to documents and deposition testimony, including from a district court litigation between Patent Owner and third-party, The Toro Company (the Iowa Litigation) for example, the prosecution attorney argument quotes testimony from a deposition of Neil B. Borenstein. *See, e.g.*, Ex. 1030 at 39–41.

Although portions of the embedded documents and deposition testimony are also found elsewhere in the reexamination prosecution history, much of Patent Owner's objective indicia arguments here do not independently cite to the documents and deposition testimony, nor does Patent Owner independently provide in this proceeding the entirety of the documents and deposition testimony.

Petitioner moves to exclude the embedded documents and deposition testimony from Exhibits 1029, 1030, and 1031 under FRE 802 because

Patent Owner relies upon them in the Patent Owner's Response for improper hearsay purposes. Pet. Mot. 1–15. Petitioner argues that the embedded documents and deposition testimony are statements made outside of this proceeding, relied upon for the truth of the matter asserted. *Id.* at 2.

Patent Owner argues that the evidence does not constitute inadmissible hearsay in that Patent Owner does not rely upon the evidence for the truth of the matter asserted. PO Mot. Opp. 1–5. According to Patent Owner, it relies upon the evidence to show that the evidence was already considered by the Office. *Id.*

Patent Owner relies upon the embedded documents and deposition testimony for two purposes: first, to show that the Office considered the evidence during reexamination (*see* PO Resp. 62–64) and second, as evidence to support the objective indicia arguments here (*see id.* at 65–81). When Patent Owner relies upon the embedded documents and deposition testimony for the *first* purpose, we are persuaded by Patent Owner that the embedded documents are not hearsay because they are not offered for the truth of the matter asserted. *See* FRE 801(c). Thus, we do not exclude the embedded documents and deposition testimony when relied upon for the first purpose.

When the embedded documents and deposition testimony are relied upon for the *second* purpose, however, the evidence is inadmissible hearsay under FRE 802. For example, Patent Owner's arguments concerning long-felt but unresolved need cite to Exhibit 1030, pages 39–41 to show that customer's desired greater lift capacity. *See* PO Resp. 69. Embedded in the attorney argument at Exhibit 1030, pages 39 to 41 are quotations from a deposition of Neil Borenstein concerning The Toro Company's work to

satisfy its customer's alleged demand for lift capacity. The quotations are statements that were made outside of trial here and are offered as evidence to prove the truth of the matter asserted—i.e., that customer's desired greater lift capacity. Quotations from a deposition of Mr. Kuemper are also embedded in the attorney argument. *See, e.g.*, Ex. 1030 at 37–38. Mr. Kuemper's testimony is likewise hearsay. We note that Patent Owner did not produce Mr. Borenstein or Mr. Kuemper for cross-examination, here, when requested by Petitioner. Pet. Mot. 11–14.

As another example, Patent Owner's arguments concerning commercial success cite to Exhibit 1029, page 185 to show that "Toro's 2015 Annual Statement similarly boasted a significant increase in compact utility loader sales following the launch of its TX1000 machine." PO Resp. 66.

Exhibit 1029, page 185 is reproduced below:

Commercial Success

Toro's 2015 Annual Statement

enjoy a good year. Sales in our compact utility loader product line grew nicely fueled in part by the introduction of our all-new, award-winning Dingo® TX 1000 that boasts an operating capacity exceeding 1,000 pounds to lift more than any compact utility loader on the market.

crete power tools. In fiscal 2015, we introduced the Dingo® TX 1000, which features a higher operating capacity and greater reach height that allows attachments to clear the side of dumpsters or trucks. We also expanded our masonry lineup with the launch of

Vermeer

As can be seen from the above, Exhibit 1029, page 185 is not Toro's 2015 Annual Statement, but rather, a slide with statements that may be from Toro's 2015 Annual Statement. As such, Exhibit 1029, page 185 is inadmissible hearsay.

For these reasons, we are persuaded by Petitioner to exclude, as inadmissible hearsay under FRE 802, all of the embedded documents and deposition testimony from Exhibits 1029, 1030, and 1031, when relied upon by Patent Owner in its substantive papers for the purpose of showing evidence of objective indicia.

Petitioner also moves to exclude the embedded documents and deposition testimony under FRE 403 because their probative value is substantially outweighed by the danger of unfair prejudice. *See, e.g.*, Pet. Mot. 3–4. Because we have already excluded the embedded documents and deposition testimony under FRE 802, Petitioner's additional request is moot.

2. Fleming Declaration (Exhibit 2016) ¶¶ 57, 60, 183–193

Petitioner moves to exclude paragraphs 57, 60, and 183–193 of the Declaration of Dr. Fleming because those paragraphs simply parrot the hearsay statements concerning The Toro Company's Development Story. Pet. Mot. 7–8; *see also* Pet. Mot. Reply 5. Petitioner seeks to "exclude portions of Dr. Fleming's declaration not because the declaration itself is hearsay, but because it contains a multitude of statements that are themselves hearsay, made by persons other than Dr. Fleming, which are then parroted in [his testimony] as if to provide substantive evidence." Pet. Mot. 14. According to Petitioner, FRE 703 "'does not authorize admitting inadmissible evidence' where the expert has 'added nothing to the inadmissible evidence other than transmitting it to the fact-finder.'" Pet.

Mot. Reply 5 (quoting *Wi-LAN Inc. v. Sharp Elecs. Corp.*, 992 F.3d 1366, 1374 (Fed. Cir. 2021)).

Patent Owner responds that we should not exclude the identified portions of the Fleming Declaration because FRE 703 "expressly allows experts to rely on information in reaching their opinions, regardless of whether the information is admissible." PO Mot. Opp. 13; *see id.* at 12–15 (entire argument).

Neither party, however, informs us *where* Patent Owner relies upon or cites to these paragraphs in support of its objective indicia argument or elsewhere in the substantive papers. We deny the request to exclude paragraphs 57, 60, and 183–193 of Dr. Fleming's testimony.

Even if we were to consider the paragraphs at issue, we would give them little weight. These paragraphs relate to The Toro Company's development of a product. *See, e.g.*, Fleming Decl. ¶¶ 57, 60, 183–193. As Dr. Fleming is not associated with The Toro Company, his testimony as to events there would be of little persuasive value.

IV. PATENTABILITY ANALYSIS

A. Legal Standards

Petitioner bears the burden of persuasion to prove unpatentability of the claims challenged in the Petition, and that burden never shifts to Patent Owner. *Dynamic Drinkware, LLC v. Nat'l Graphics, Inc.*, 800 F.3d 1375, 1378 (Fed. Cir. 2015).

A patent claim is unpatentable under 35 U.S.C. § 103 if the differences between the claimed subject matter and the prior art are such that the subject matter, as a whole, would have been obvious at the time the

invention was made to a person having ordinary skill in the art to which said subject matter pertains. *KSR Int'l Co. v. Teleflex Inc.*, 550 U.S. 398, 406 (2007). The question of obviousness is resolved on the basis of underlying factual determinations including: (1) the scope and content of the prior art; (2) any differences between the claimed subject matter and the prior art; (3) the level of skill in the art; and (4), if present, any objective evidence of obviousness or non-obviousness. *Graham v. John Deere Co.*, 383 U.S. 1, 17–18 (1966).

In analyzing the obviousness of a combination of prior art elements, it can be important to identify a reason that would have prompted one of skill in the art "to combine . . . known elements in the fashion claimed by the patent at issue." *KSR*, 550 U.S. at 418. A precise teaching directed to the specific subject matter of a challenged claim is not necessary to establish obviousness. *Id.* Rather, "any need or problem known in the field of endeavor at the time of invention and addressed by the patent can provide a reason for combining the elements in the manner claimed." *Id.* at 420. Accordingly, a party who petitions the Board for a determination of unpatentability based on obviousness must show that "a skilled artisan would have been motivated to combine the teachings of the prior art references to achieve the claimed invention, and that the skilled artisan would have had a reasonable expectation of success in doing so." *In re Magnum Oil Tools Int'l, Ltd.*, 829 F.3d 1364, 1381 (Fed. Cir. 2016) (quoting *Intelligent Bio–Sys., Inc. v. Illumina Cambridge, Ltd.*, 821 F.3d 1359, 1367–68 (Fed. Cir. 2016)).

B. Level of Ordinary Skill in the Art

We review the grounds of unpatentability in view of the understanding of a person of ordinary skill in the art ("POSITA") at the time of invention. *Graham*, 383 U.S. at 17. Petitioner proposes the following definition for a POSITA:

> [A] POSITA in February 2015 (the earliest effective filing date claimed) would have had at least a Bachelor of Science degree in Mechanical or Agricultural Engineering and two years of experience in the design of vehicles, or have had equivalent knowledge and experience. Lack of professional experience can be remedied by additional education, and vice versa.

Pet. 17 (citing Ex. 1003 ¶¶ 17–20).

Patent Owner responds that it "does not dispute" the definition of one of ordinary skill in the art proposed by Petitioner and "notes that it substantially tracks" Patent Owner's definition. PO Resp. 25–26; *see also id.* at 26 n. 6 (defining one of ordinary skill in the art as having "at least a Bachelor of Science degree in Mechanical or Agricultural Engineering and two years of experience in the design of machines, or have had equivalent knowledge and experience").

As noted in the Decision on Institution, Petitioner's proposed definition appears consistent with the record, including the prior art. *See* Dec. Inst. 17–18 (citing *In re GPAC Inc.*, 57 F.3d at 1579). Patent Owner's proposal is the same, except Patent Owner uses the term "machines" instead of "vehicles." With that, we agree with Patent Owner that the differences in the two proposed levels of ordinary skill in the art are minor. Further, Patent Owner has not argued at trial that Petitioner's proposal for the level of ordinary skill leads to an improper understanding of how a skilled artisan

would have understood either the challenged patent or the prior art. In the analysis below, we continue to apply the level of ordinary skill in the art adopted in the Decision on Institution, as proposed by Petitioner. The analysis would be the same under Patent Owner's proposed level.

C. Patent Owner's Arguments Regarding Dr. Velinsky's Testimony

We turn now to Patent Owner's arguments presenting several different reasons that Dr. Velinsky's testimony should be given little to no weight. *See* PO Resp. 31–37; PO Sur-reply 7–12. We address each in turn.

First, Patent Owner contends that Dr. Velinsky's "testimony should be disregarded" because he "lacks necessary experience." PO Resp. 31. According to Patent Owner, Dr. Velinsky "has no experience designing machines like the compact tool carriers at issue in this proceeding," "lacks any familiarity with how the components of these machines are typically configured or packaged within a machine," and "knows nothing about the kinds of attachments these machines accept." *Id.* 31–32 (citing Ex. 2021[10] ("Velinsky Depo. Tr."), 18:4–28:7); *see also* PO Sur-reply 9 (arguing that "none of [Dr.] Velinsky's prior work relates to compact utility loaders"). Patent Owner also contends that Dr. Velinsky

> did nothing to investigate the performance characteristics that drive demand for these machines, has never operated a compact tool carrier, did not operate or even inspect any of the physical machines sold by the parties to this dispute, and did not ask to

[10] For the page numbering of Exhibit 2021, like Patent Owner, we cite to the native pagination (in the *upper* right corner) rather than the page numbered added for this proceeding (in the *lower* right corner).

> speak with a single engineer at Kubota about the challenges they face when designing these machines.

PO Resp. 32 (citing Ex. 2021, 12:6–13:1, 33:19–34:5, 35:8–36:1). Patent Owner adds that Dr. Velinsky allegedly "has no experience or capabilities with CAD or finite element analysis software—basic tools that would be known to [one of ordinary skill in the art] and used for designing machines in the industry during the critical timeframe at issue in this proceeding." *Id.* (citing Ex. 2021, 13:2–14:11). At the oral hearing, counsel clarified that, with this argument, Patent Owner takes the position that Dr. Velinsky does not meet the level of ordinary skill in the art. *See* Tr. 37:23–40:5.

We are not persuaded by this argument because none of the knowledge that Patent Owner highlights as lacking in Dr. Velinsky is listed in the nearly identical proposals for the level of ordinary skill in the art. *See* § IV.B. Patent Owner does not dispute that Dr. Velinsky has the required Bachelor of Science degree in Mechanical or Agricultural Engineering and two years of experience in the design of *vehicles*, as required. *See* Velinsky Pet. Decl. ¶¶ 9–14 (discussing qualifications and experience), *discussed at* Pet. Reply 6. After agreeing with Petitioner's level of ordinary skill in the art (PO Resp. 25–26), Patent Owner now seeks to exclude *all* of Dr. Velinsky's declaration testimony based on *additional* proposed requirements. *See* PO Resp. 31–33. We decline to do so. *See Sierra Wireless, ULC v. Sisvel S.p.A.*, 130 F.4th 1019, 1024 (Fed. Cir. 2025) ("To offer expert testimony from the perspective of a skilled artisan in a patent case—like for claim construction, validity, or infringement—a witness must at least have ordinary skill in the art." (quoting *Kyocera Senco Indus. Tools Inc. v. Int'l Trade Comm'n*, 22 F.4th 1369, 1376–77 (Fed. Cir. 2022))

(applying the requirement from *Kyocera* in an appeal from a PTAB decision)).

Second, Patent Owner argues that Dr. Velinsky improperly "relied on [Petitioner's] attorneys to create the CAD drawings that appear in his declaration," that Dr. Velinsky "admitted that he did not determine the locations for the various pivot points that he proffers for his hypothetical modified machine, instead leaving those critical decisions to [Petitioner's] attorney," and that Petitioner's attorneys "handled the work of designing the configuration (pivot points, actuator length, linkage lengths, etc.) that appears in [Dr.] Velinsky's declaration." PO Resp. 32 (citing Ex. 2021, 14:12–17:11). According to Patent Owner, Dr. Velinsky "failed to consider whether or where *any* of the components of the machine disclosed in KR996 would be located in the modified machine, or whether those components would be compatible with the modifications he proposes" and thus failed to perform "any engineering analysis or assessment whatsoever." *Id.* at 33 (citing Ex. 2021, 130:14–132:6, 134:25–135:21). Patent Owner argues that, "[f]or this reason alone, his opinions are pure *ipse dixit* and should be disregarded." *Id.* We will not disregard the entirety of Dr. Velinsky's testimony based on these issues. Indeed, Patent Owner has failed to provide *any* legal basis for such a result based on these concerns. *See id.* at 31–33 (citing only Dr. Velinsky's deposition for this argument).

Third, Patent Owner argues that we should disregard all of Dr. Velinsky's declaration testimony because he "failed to consider any objective indicia of non-obviousness—including the evidence that was an express part of the reexamination prosecution histories." PO Resp. 33–34 (citing Ex. 2021, 56:10–62:2). Again, we will not disregard the entirety of

Dr. Velinsky's testimony based on this issue at least because Patent Owner has failed to provide *any* legal basis for such a result. *See id.* at 33—34 (citing only Dr. Velinsky's deposition for this argument).

Fourth, Patent Owner argues that we should disregard Dr. Velinsky's declaration testimony because he "freely admitted to conducting his analysis using impermissible hindsight." PO Resp. 34 (citing Ex. 2021, 52:21–56:9). We disagree. As argued by Petitioner, Dr. Velinsky did not "admit" to using "hindsight" in his analysis. *See* Pet. Reply 29. Rather, the cited deposition testimony walks through the process of Dr. Velinsky's analysis, which Patent Owner *now* characterizes in its argument as "hindsight." For example, in the Response, Patent Owner highlights and quotes a portion of testimony in which Dr. Velinsky acknowledges to have "list[ed] a limitation and then you [found] where it is in the prior art." PO Resp. 34 (quoting Ex. 2021, 54:7–10). That is not an admission of hindsight, but merely an acknowledgement of the process that constitutes an obviousness analysis. *See In re McLaughlin*, 443 F.2d 1392, 1395 (CCPA 1971) ("Any judgment on obviousness is in a sense necessarily a reconstruction based upon hindsight reasoning, but so long as it takes into account only knowledge which was within the level of ordinary skill at the time the claimed invention was made and does not include knowledge gleaned only from applicant's disclosure, such a reconstruction is proper."); *see also* Ex. 2021, 54:24–25 (Dr. Velinsky responding that "[w]e had to look to the claims to know what the technology was").

Fifth, Patent Owner contends that Dr. Velinsky's testimony regarding "mainframe" should be given "no weight" because Dr. Velinsky "applied a claim construction that was expressly rejected by the Board in the Institution

Decision." PO Resp. 34–35 (citing Ex. 2021, 65:10–66:17; Dec. Inst. 19–25, 34). The record does not support this argument. In the deposition testimony highlighted by Patent Owner, counsel showed Dr. Velinsky his declaration here, which included a statement in paragraph 74 about *Patent Owner's* proposed construction of "mainframe." Ex. 2021, 65:10–17. Counsel then asked if that was the construction Dr. Velinsky applied in his analysis, to which Dr. Velinsky did not reply directly but identified aspects with which he agreed, including that the purpose of the "mainframe" is to "support the loader as described." *Id.* at 65:18–25. Counsel then asked other questions (*id.* at 66:1–13) before returning to *again* ask whether Dr. Velinsky applied Patent Owner's construction in his analysis, to which he replied "Yes, I would say so." *Id.* at 66:14–17. Despite Dr. Velinsky's answer to the question at issue, the record is clear that neither he nor Petitioner *actually* applied Patent Owner's construction; indeed, we discuss below the dispute between the parties and declarants on the construction of "mainframe" and the application of that construction. *See* §§ IV.D. Moreover, Patent Owner has not provided a legal basis to ignore *the entirety* of Dr. Velinsky's testimony on this basis.

As part of this argument, Patent Owner also highlights that Dr. Velinsky identified portions of the lower frame of bogies 30 and 50 in KR996 as part of the "mainframe," allegedly indicating his "improper and overly expansive view" of that term. PO Resp. 35–37 (citing Ex. 2021, 118:20–120:25) (reproducing Ex. 2022 (Velinsky Depo. Tr.) at 15, 22 (showing pen identifying structures of the "mainframe" in KR996, Figs. 1

and 14)).[11] Despite Dr. Velinsky's over-identification of the structures making up the "mainframe" in KR996 *during his deposition*, again, the record is clear as to the structure in that reference that both he and Petitioner *actually* identified as the "mainframe." Nowhere in either of his declarations did Dr. Velinsky identify the lower frame of the bogie 30 (in Figure 1) or bogie 50 (in Figure 14) of KR996 as part of the "mainframe." *See, e.g.*, Velinsky Pet. Decl. ¶¶ 73–75; Velinsky Reply Decl. ¶¶ 2–4. Although consistency would have been preferred, we do not view this over-identification during his deposition as a basis to reject the entirety of Dr. Velinsky's testimony.

Lastly, Patent Owner argues that Dr. Velinsky's opinions should be given "little weight" because Dr. Velinsky was unaware that Patent Owner had an expert and did not review Dr. Fleming's declaration. *See* PO Sur-reply 10–11 (citing *Juniper Networks, Inc. v. Correct Transmission LLC*, No. 2023-1046, 2024 WL 3517862 at *5 (Fed. Cir. Jul. 24, 2024)).

The *Juniper Networks* decision relied upon by Patent Owner does not support the request to give the entirety of Dr. Velinsky's testimony "little weight." That Federal Circuit proceeding involved an appeal of two *inter partes* review final decisions determining claims in two patents not unpatentable because petitioner had failed to show a reasonable expectation of success in the proposed combination. *Juniper Networks*, 2024 WL 3517862 at *1, *3, *5. The cited discussion addressed the reasonable expectation of success issue as to one patent, with the Federal Circuit

---

[11] For the page numbering of Exhibit 2021, like Patent Owner, we cite to the native pagination (in the *upper* right corner) rather than the page numbered added for this proceeding (in the *lower* right corner).

concluding that the Board's determination was supported by substantial evidence. *Id.* at *5. The Federal Circuit expressly found petitioner's declarant's testimony to be "conclusory and not credible" before summarizing patent owner's declarant's "contradictory testimony" and the Board's findings in support of that testimony. *Id.* The Federal Circuit identified three issues that constituted substantial evidence supporting the Board's conclusion on reasonable expectation of success: (1) patent owner's declarant's contradictory testimony, (2) petitioner's declarant's failure to address certain unidentified issues discussed by patent owner's declarant, and (3) the Board crediting patent owner's declarant over petitioner's declarant. *Id.*

Put simply, the *Juniper Networks* decision did not involve similar facts to here, in which a petitioner's declarant was apparently unaware of a patent owner's declarant and did not review the declaration filed with the patent owner's response. And the *Juniper Networks* decision does not stand for the proposition that if a petitioner's declarant files a reply declaration that does not address all points raised in a declaration filed with a patent owner's response, the *entirety* of the testimony by petitioner's declarant should be given little weight or that Patent Owner *must* prevail on any given issue not addressed in the reply declaration. *See, e.g.*, PO Sur-reply 11 (arguing that Petitioner's "odd stratagem also renders [Dr.] Fleming's expert testimony unrebutted" and that Petitioner's "bald attorney argument in its Reply provides no support for the Board to find in [Petitioner's] favor on these issues"). Instead, we address each factual and legal issue individually below, taking into account the entire record, which includes the Petition and Dr. Velinsky's two declarations.

D. Claim Construction

1. The Applicable Standard

In *inter partes* reviews, the Board interprets claim language using the same claim construction standard that would be used in a civil action under 35 U.S.C. § 282(b), as described in *Phillips v. AWH Corp.*, 415 F.3d 1303 (Fed. Cir. 2005) (en banc). *See* 37 C.F.R. § 42.100(b). Under that standard, we generally give claim terms their ordinary and customary meaning, as would be understood by a person of ordinary skill in the art at the time of the invention, in light of the language of the claims, the specification, and the prosecution history. *See Phillips*, 415 F.3d at 1313–14. Although extrinsic evidence, when available, may also be useful when construing claim terms under this standard, extrinsic evidence should be considered in the context of the intrinsic evidence. *See id.* at 1317–19.

2. Procedural History

In its initial filing, Petitioner stated that "no claim term requires express construction" (Pet. 17–18), but Petitioner noted that the Iowa District Court discussed constructions of certain claim terms (Pet. 18 n.3). Following a *sua sponte* request by the Board (Paper 6), Petitioner filed an initial claim construction brief (Paper 10 ("Pet. Init. CC Br.")) and a reply claim construction brief (Paper 15 ("Pet. Reply CC Br.")) addressing the term "mainframe" in claims 1 and 19, and Patent Owner did the same (Paper 12 ("PO Init. CC Br."); Paper 13 ("PO Reply CC Br.")). Below, we address the parties' proposed constructions, including arguments during trial. *See* PO Resp. 26–31; Pet. Reply 8–10; PO Sur-reply 12–17.

3. "mainframe" (independent claims 1 and 19)

Limitation 1.2a in independent claim 1 and limitation 15.2 in independent claim 15.2(a) recite "a mainframe for supporting the loader" with other limitations (including limitations 1.2b–1.4 and limitations 15.2b–15.5b) referring back to the "mainframe." See Ex. 1001, 6:34–56 (claim 1); Ex. 1001, Reexam. Cert. C1 2:36–3:10 (claim 15).

In the briefing prior to institution in this proceeding, Petitioner proposed that "mainframe" should be construed "according to its plain and ordinary meaning, and not require a 'single weldment,'" with Petitioner adding that, "[t]o the extent the PTAB wants a specific construction, a 'mainframe' is a supporting structure of a vehicle." Pet. Init. CC Br. 5. At the same time, Patent Owner proposed that "mainframe" be "given its plain and ordinary meaning: the body of the compact tool carrier that supports the loader." PO Init. CC Br. 1; *see* Prelim. Resp. 27 (same proposed construction). In the Decision on Institution, we preliminarily construed "mainframe" under its plain and ordinary meaning as *a primary supporting structure* and we did not adopt Patent Owner's proposal that a "mainframe" must be "always present and not selectively removable." *See* Dec. Inst. 19–25. For the reasons below and based on the complete record at trial, we maintain the preliminary construction and we reject a similar additional requirement proposed by Patent Owner after institution.

We begin the analysis with the relevant claim language. *TQ Delta, LLC v. DISH Network LLC*, 929 F.3d 1350, 1357 (Fed. Cir. 2019). The complete record developed at trial supports understanding the term "frame" in "mainframe" as a *supporting structure*. On this issue, Patent Owner provides an excerpt of a dictionary defining "frame" as a "rigid supporting

structure." PO Resp. 26–27 (citing Ex. 2007 (excerpts of the Concise Oxford English Dictionary, tenth edition) at 3); *see also* Pet. Init. CC Br. 5 (stating that "a 'mainframe' is a supporting structure of a vehicle"). This dictionary definition does not contradict the "mainframe" described in the Specification or any other intrinsic evidence of record. *See, e.g.*, Ex. 1001, Fig. 4, 2:32–33 ("FIG. 4 is a perspective view of the mainframe of a compact tool carrier."); *see also Phillips*, 415 F.3d at 1322–23 (stating that judges may "rely on dictionary definitions when construing claim terms, so long as the dictionary definition does not contradict any definition found in or ascertained by a reading of the patent documents").

We now turn to the term "main" in the claim language "mainframe." In the claim construction briefing prior to institution, Patent Owner stated that the "body is the *primary frame* of the machine (*i.e.*, the core structure of the machine that is always present and not selectively removeable) to which the other components attach." PO Init. CC Br. 1.[12] The complete record supports Patent Owner's argument as to *primary* in that the claim language at issue recites a "*main*frame" rather than merely a "frame." *See* PO Resp. 27 ("And the addition of 'main' to 'frame' simply indicates that this frame is the primary—or most important—frame of the vehicle." (citing Ex. 2007 at 4 (defining "main" as "chief in size or importance"))); *see also* Ex. 1006 (prior art reference JP2004017705A) ¶ 2 ("Conventionally, there have been various structures for *main frames which constitute a main part of a chassis* in various types of work vehicles for construction and civil

[12] We address below Patent Owner's position that the structures of the "mainframe" must be "always present and not selectively removeable."

engineering work, such as bulldozers, hydraulic excavators, and the like." (emphasis added)), *cited at* PO Init. CC Br. 2. Thus, the claim language itself supports construing "mainframe" as a *primary supporting structure*.

Having addressed the claim language, we turn to the Specification. We first address the sentence highlighted in the Board's request for additional briefing on claim construction: "As used herein, the term 'mainframe' generally refers to a single weldment to which the loader 8 is attached, optionally through one or more pivotal linkages." Ex. 1001, 4:5–8, *quoted at* Paper 7 at 3. In the request, the Board sought briefing on whether this sentence is (1) a lexicographical definition of "mainframe" or, in the alternative, (2) merely a description of an embodiment. Paper 7 at 3. The parties both responded that this sentence is *not* lexicographical, but rather, merely describes an embodiment. *See* PO Init. CC Br. 1–5; Pet. Init. CC Br. 1–4; PO Reply CC Br. 1 (noting agreement); Pet. Reply CC Br. 1 (same). For the reasons below, we agree with the parties.

"To act as a lexicographer, a patentee must 'clearly set forth a definition of the disputed claim term' and 'clearly express an intent to redefine the term.'" *Luminara Worldwide, LLC v. Liown Elecs. Co.*, 814 F.3d 1343, 1353 (Fed. Cir. 2016) (quoting *Thorner v. Sony Comput. Entm't Am. LLC*, 669 F.3d 1362, 1365 (Fed. Cir. 2012)). As argued by both parties, the presence of "generally" in the sentence at issue shows a lack of clear intent to redefine "mainframe." PO Init. CC Br. 3; Pet. Init. CC Br. 2; *cf. ParkerVision, Inc. v. Vidal*, 88 F.4th 969, 976–77 (Fed. Cir. 2023) (finding definitional the sentence "[s]torage modules and storage capacitances, on the other hand, <u>*refer to*</u> systems that store non-negligible amounts of energy from an input EM signal" (emphasis added));

Sinorgchem Co., Shandong v. Int'l Trade Comm'n, 511 F.3d 1132, 1136 (Fed. Cir. 2007) (finding definitional the sentence "[a] 'controlled amount' of protic material *is* an amount up to that which inhibits the reaction of aniline with nitrobenzene, e.g., up to about 4% H_2O based on the volume of the reaction mixture when aniline is utilized as the solvent" (emphasis added)).

Because the sentence at issue from the Specification is not lexicographical, we agree with the parties that "mainframe" is not limited to a single weldment. Pet. Init. CC Br. 1; PO Init. CC Br. 1–2. Instead, a single-weldment "mainframe" is merely one disclosed embodiment. *See* Pet. Init. CC Br. 3 (stating that "by including the term 'generally' in a statement, the feature (*i.e.*, single weldment) is expressly identified as merely included in some, but not all embodiments"); PO Init. CC Br. 3 ("This language is merely exemplary, using reference numerals to refer to the embodiment's features and qualifying 'single weldment' as referring 'generally' to specific embodiments."). The Iowa District Court reached the same conclusion. *See* Ex. 1020 at 4 (holding that "'mainframe' will be given its plain and ordinary meaning and *does not require a single weldment*" (emphasis added)), *cited at* Pet. Init. CC Br. 2; *see also* 37 C.F.R. § 42.100(b) ("Any prior claim construction determination concerning a term of the claim in a civil action, or a proceeding before the International Trade Commission, that is timely made of record in the *inter partes* review proceeding will be considered.").

Turning to the prosecution history, neither Petitioner nor Patent Owner has highlighted any specific statements that impact the scope of the term "mainframe." And from our independent review, we do not discern

any such statements. For these reasons, the intrinsic evidence as a whole supports construing "mainframe" as a *primary supporting structure*.

In the briefing after institution, both parties state that they agree with this construction. *See* PO Resp. 26–27 ("As the Board noted in the Institution Decision, the plain and ordinary meaning of 'mainframe' to [one of ordinary skill in the art] is 'primary supporting structure.'" (citing Dec. Inst. 19–25)); Pet. Reply 12 ("The Board's [Institution Decision] construction of 'primary supporting structure' is correct . . . ."). Patent Owner's declarant, Dr. Fleming, also states to agree with this construction. Fleming Decl. ¶ 89 ("The plain and ordinary meaning of 'mainframe,' as that term has been preliminarily construed by the Board is 'the primary supporting structure' of the machine. In my view, this construction is consistent with the plain meaning of the words 'main' and 'frame' and their use within the [challenged p]atent." (citing Ex. 2007)), *cited at* PO Resp. 27.

But, essential to the analysis here, Patent Owner's agreement with the construction of "mainframe" discussed above is predicated on further interpreting the term "primary" (i.e., within the construction) as *precluding* any "supporting structure that is selectively removeable during various operations of the machine." PO Resp. 30 (citing Fleming Decl. ¶ 93); *see id.* ("The term 'mainframe' does not apply to attachments that are routinely disconnected and left aside while the machine continues to perform other work." (citing Fleming Decl. ¶¶ 89–91)). Stated differently, Patent Owner proposes that the term "primary"—i.e., in the language of the agreed-upon construction of "mainframe"—*requires* that any "supporting structure" comprising the "mainframe" must be "*always present* during all aspects of its operation." *Id.* (citing Fleming Decl. ¶ 93); *see also* Fleming Decl. ¶ 91

("A person of ordinary skill in the art in February of 2015 would further understand that the 'primary' supporting structure refers to a fundamental part of the machine that is always present—not selectively removable—during all aspects of operation of the machine."). For the reasons below, we do not adopt Patent Owner's proposed "always present" requirement for the "mainframe." On this issue, we begin with the arguments and evidence provided prior to institution, and we then move to the arguments and evidence provided during trial.

As noted by Petitioner (Pet. Reply 7), prior to institution, Patent Owner proposed essentially the same additional requirement—that a "mainframe" must be "always present and not selectively removeable." *See* PO Init. CC Br. 1. In proposing that additional requirement for the "mainframe," Patent Owner cited its own Preliminary Response and cited claims 1 and 5 of the challenged patent. *See id.* at 1–2. As acknowledged by Patent Owner, the Preliminary Response provides *argument* that certain structures in KR996 are not a "mainframe," but the briefing does not explain *the basis* for the additional requirement of "always present and not selectively removeable" because Patent Owner did not present that position until *after* its Preliminary Response. *See id.* at 1; *compare* Prelim. Resp. 23–24 ("As the *primary* frame of the compact utility loader, the 'mainframe' is the core structure of the machine to which the other components attach."), *with* PO Init. CC Br. 1 ("As Vermeer explained in its Patent Owner Preliminary Response ('POPR'), this body is the *primary frame* of the machine (*i.e.*, the core structure of the machine that is always present and not selectively removeable) to which the other components attach."). Patent Owner then summarized the added limitations of claim 5, which also do not

support the scope of "mainframe" in the independent claims here. *See* PO Init. CC Br. 1–2. As discussed in the Decision on Institution, in the pre-institution briefing, Patent Owner failed to explain how the record supported the additional requirement proposed. *See* Dec. Inst. 24–25.

In the briefing after institution, Patent Owner first cites to certain passages of the Specification as allegedly supporting that "the 'mainframe' represents the core structure of the machine to which the other components attach." *See* PO Resp. 27 (citing Ex. 1001, 2:2–3, 3:20–24, 3:62–64, 4:10–12, 4:13–18, 4:35–42, 5:52–55; Fleming Decl. ¶¶ 89–93). That the Specification generally discloses various structures attaching to the "mainframe," however, does not support Patent Owner's proposed "always present" requirement. Stated differently, that other structures are attached to the "mainframe" does not address the issue at hand, which is whether the structures comprising the "mainframe" must be *always present*.

Relatedly, Patent Owner highlights two U.S. Patents—No. 5,004,398 to Wagner (Ex. 2017) and No. 5,666,794 to Vought (Ex. 2018)—as allegedly disclosing configurations "similar to that found in KR996" and that distinguish between a "mainframe" and "*selectively removable*" attachments. *See* PO Resp. 27–29. As an initial matter, Patent Owner has not alleged or shown that either reference was discussed in the prosecution history, which would elevate them to the level of intrinsic evidence. *See, e.g.*, *Tate Access Floors, Inc. v. Interface Architectural Res., Inc.*, 279 F.3d 1357, 1371–72 n.4 (Fed. Cir. 2002) ("Prior art cited in the prosecution history falls within the category of intrinsic evidence. Prior art the examiner failed to consider is extrinsic.").

Further, although both references disclose a "mainframe" (as in Wagner, or a "mainframe assembly" as in Vought) as structure *separate from* removable attachments/tools, those references do not support a *per se* rule that any structure in a "mainframe" of a utility loader must be "always present"; indeed, neither reference discusses any such *temporal* requirement related to the structures in a "mainframe" (or "main frame assembly"). *See* PO Resp. 27–29 (citing Ex. 2017, Fig. 1, 3:22–62; Ex. 2018, Fig. 1, 3:45–50, 4:45–61, 5:40–55). To accept Patent Owner's argument here, we would have to infer that the "always present" requirement applies *globally* to any "mainframe" based on the exemplary embodiments disclosed in two extrinsic prior art references, which do not address the issue. Patent Owner has not identified a legal basis for that approach.

Patent Owner also relies on the testimony of Dr. Fleming in support of the "always present" requirement. *See* PO Resp. 27 (citing Fleming Decl. ¶¶ 88–93). Specifically, Dr. Fleming testifies that "a skilled artisan would have understood that the mainframe of the machine encompasses only the *primary* supporting structure of the machine, and not any supporting structure that [is] selectively removable during various operations of the machine." Fleming Decl. ¶ 93; *see also id.* ¶ 91 ("A person of ordinary skill in the art in February of 2015 would further understand that the 'primary' supporting structure refers to a fundamental part of the machine that is always present—not selectively removable—during all aspects of operation of the machine."). In support, however, Dr. Fleming relies on Wagner and Vought, as discussed above, which we find unpersuasive. *Compare* Fleming

Decl. ¶ 93 (citing passages of Wagner and Vought), *with* PO Resp. 27–29 (citing the same passages).[13]

In the Sur-reply, Patent Owner does not discuss additional argument or evidence supporting the "always present" requirement, but rather, attempts to refute Petitioner's arguments from the Reply Brief. *See, e.g*, Pet. Reply 8–10; PO Sur-reply 12–17. Because the evidence and argument provided by Patent Owner in this proceeding does not support the "always present" requirement, we do not include that additional requirement as part of the construction for "mainframe" applied below.

For the reasons above and based on the complete record at trial, we maintain the construction of "mainframe" in independent claims 1 and 19 under its plain and ordinary meaning as *a primary supporting structure*. In addition, we do not adopt Patent Owner's additional proposed requirement—i.e., that any "supporting structure" in the "mainframe" must be always present during all aspects of operation.

E. Ground 1 – KR996 and JP705

Petitioner challenges claims 1–13, 21, 22, and 64 as unpatentable over KR996 and JP705. Pet. 21–59; Pet. Reply 13–18.

Patent Owner provides arguments specifically addressing this asserted ground. PO Resp. 37–43; PO Sur-reply 19–21.

---

[13] In a different paragraph, Dr. Fleming relies on Vought and two other U.S. patents (Exs. 2019, 2020) for the proposition that "[c]onstruction machines with selectively removable equipment or attachments were well known in the art," but none of the cited passages from those references mentions "mainframe" or a similar term or addresses the scope of a "mainframe." Fleming Decl. ¶ 92.

1. Summary of KR996

KR996 "relates to construction equipment for green building deconstruction work," and, more particularly, to equipment "that can enter narrow buildings and carry out dismantling work inside the building, and can easily attach and detach various dismantling equipment to the vehicle according to the form of the deconstruction work." Ex. 1005 ¶ 1.

Figure 1 of KR996 is reproduced below:

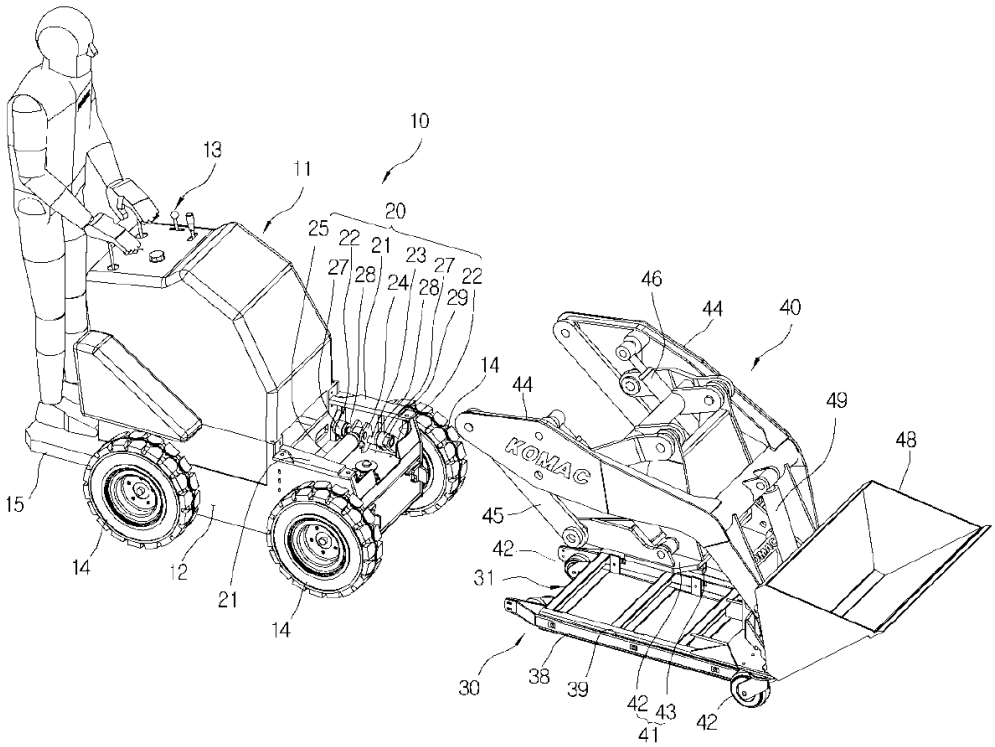

Figure 1 is a perspective view showing before loader unit 40 and bogie 30 are attached to vehicle 10. Ex. 1005 ¶¶ 40, 93. To attach bogie 30/loader unit 40 to vehicle 10, the operator shown on board at the rear uses control unit 13 to move vehicle 10 forward to engage detachable part 20 with fixture 41. *Id*. ¶¶ 42, 43, 54.

Figure 7 is reproduced below:

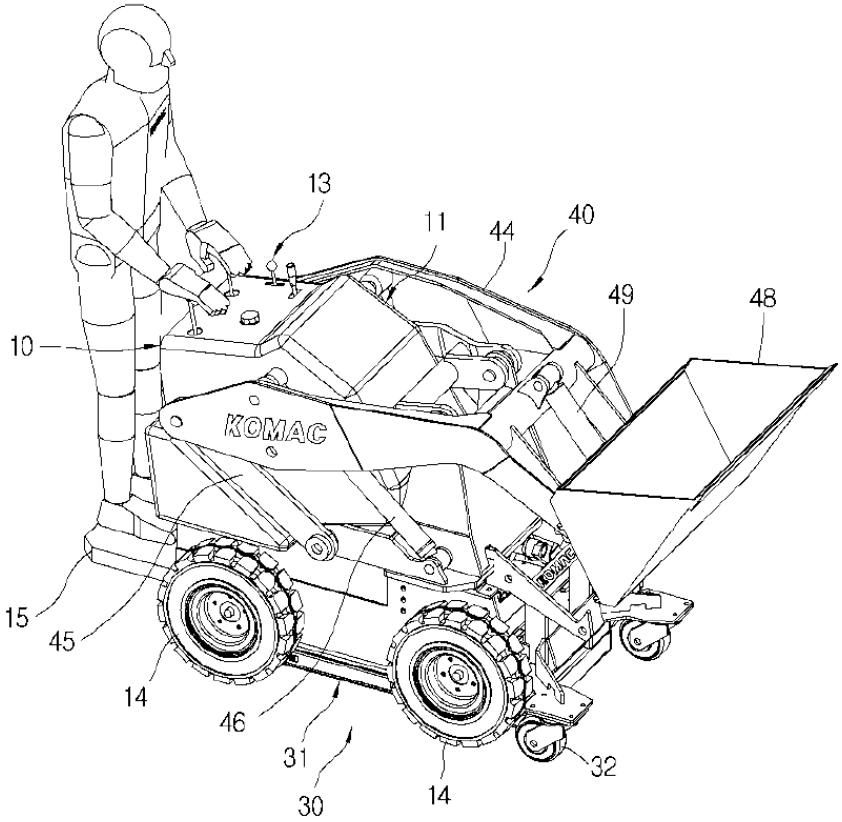

Figure 7 is a perspective view showing bogie 30 and loader unit 40 coupled to the detachable part of the vehicle. Ex. 1005 ¶¶ 40, 99. As shown in this Figure, vehicle 10 also includes (1) wheels 14 for moving vehicle 10, (2) linkage 45 to support boom 44, (3) actuator 46 to drive boom 44 upwards and downwards, and (4) bucket 48 to carry material. *Id.* ¶¶ 52, 54, 74.

2. Summary of JP705

JP705 discloses "a main frame for a work vehicle that enables easy and reliable installation of various on-board devices such as an engine, a transmission, and the like." Ex. 1006 ¶ 1.

Figure 1 is below:

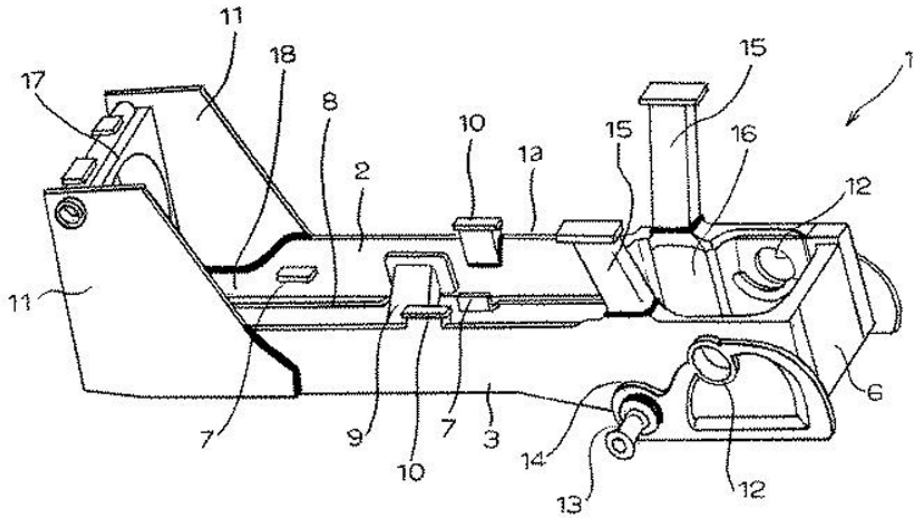

Figure 1 is a "a perspective view schematically depicting an example of a main frame of a work vehicle." Ex. 1006 ¶ 17. Mainframe 1 includes "a pair of left and right side plates 2 and 3." *Id.* ¶ 19. JP705 discloses:

> A pair of left and right mounting parts 7 and 7 for mounting an engine, a steering device, and the like (not depicted) are provided near the upper surfaces of the side plates 2 and 3 and protrude from the inner side surfaces in the width direction of the frame. A pair of similar left and right mounting parts 8 and 8 of various types are provided on the lower surfaces of the side plates 2 and 3, protruding from the inner side surfaces in the width direction of the frame.

Ex. 1006 ¶ 19.

3. Independent Claim 1

a) The Reasons to Combine KR996 and JP705

Petitioner provides reasons to combine KR996 with JP705. *See* Pet. 21–27; Velinsky Pet. Decl. ¶¶ 54–62. Specifically, Petitioner first discusses why KR996 and JP705 are analogous art to the challenged patent. *See* Pet. 24–25. Then, Petitioner discusses why one of ordinary skill in the art "would have been motivated to combine the teachings of JP705, and in

particular, its mounting parts as an engine bracket to KR996's vehicle to produce predictable and beneficial results." Pet. 25 (citing Velinsky Pet. Decl. ¶¶ 55–62). Petitioner discusses how KR996 has "an engine disposed within its frame," but that reference "does not detail how its engine is secured to its mainframe." *Id.* (citing Velinsky Pet. Decl. ¶ 56). According to Petitioner, JP705 "does detail providing a mounting surface for just such an engine in a substantially similar vehicle," including with mounting parts 7 that "beneficially provid[e] a mounting surface for receiving an engine to effectuate the vehicle's operation by securing the engine and allowing the engine to serve as structural support." *Id.* (citing Velinsky Pet. Decl. ¶ 58).

Petitioner then provides some alleged benefits of the proposed combination, including (1) "avoiding use of additional parts to secure the engine in the vehicle," (2) "reduc[ing] the number of fastening parts (such as a bolt, nut, collar, or the like" and thereby reducing "component costs an weight," (3) by connecting JP705's mounting parts using welding, providing a "smooth, continuous surface," and (4) "efficient loading of an engine onto the available, prepared, designated mounting surface." *See* Pet. 25–26 (citing Velinsky Pet. Decl. ¶¶ 57–61; Ex. 1006 ¶¶ 8, 13, 16, 18, 22). Petitioner adds that the proposed combination

> is merely applying a known technique to a known structure (e.g., JP705's recognition of a well-known technique of mounting an engine in a vehicle's frame using an engine bracket, with KR996's vehicle having a frame and engine) ready for improvement (e.g., providing an easily accessible mounting surface extending from the frame suitable to receive the engine) to yield predictable results.

Pet. 26 (citing Velinsky Pet. Decl. ¶ 61; *Intel Corp. v. PACT XPP Schweiz AG*, 61 F.4th 1373, 1380–81 (Fed. Cir. 2023)). Petitioner concludes by

discussing why a one of ordinary skill in the art would have had a reasonable expectation of success in the proposed combination. *See* Pet. 26–27 (citing Velinsky Pet. Decl. ¶ 62).

Patent Owner presents two arguments directed at Petitioner's reasons to combine KR996 and JP705. *See* PO Resp. 38–39; PO Sur-reply 19. First, Patent Owner argues that Petitioner's "rationale for modifying KR996 to include the engine bracket in JP705 fails" because "KR996 discloses an engine and, necessarily, a mechanism for securing the engine." PO Resp. 38. According to Patent Owner, one of ordinary skill in the art "would not be motivated to combine JP705 when the engine of KR996 is already secured to the machine." *Id.* (citing Fleming Decl. ¶¶ 94–97).

Patent Owner's argument is unpersuasive. Petitioner notes KR996's disclosure of an engine but highlights how KR996 does not provide *any* details as to how the engine is secured to the mainframe. Pet. 25. Thus, Petitioner relies on JP705 to provide those details—i.e., the specific structural teachings on how to secure KR996's engine to the mainframe—in the context of the proposed combination. *See Intel Corp.*, 61 F.4th at 1380–81 (finding it obvious to modify a first reference with an element from a second reference to address a specific issue if the element was a "suitable option," even where the first reference already addressed the issue in a different way), *cited at* Pet. 26.

Second, Patent Owner contends that the proposed combination is deficient because KR996 and JP705 allegedly disclose "two completely different categories of machines, with disparate sizes and engine types/sizes." PO Resp. 38–39. According to Patent Owner, "[u]nlike KR996, JP705 describes a mainframe used for large work vehicles such as

bulldozers and hydraulic excavators." *Id.* at 39 (citing Ex. 1006 ¶ 1). Patent Owner asserts that, "[g]iven this incompatibility, [one of ordinary skill in the art] would not be motivated to incorporate JP705's mainframe or brackets into the KR996 machine." *Id.* (citing Fleming Decl. ¶¶ 94–97); *see also* PO Sur-reply 19 (arguing that Petitioner "has provided the Board with no evidentiary basis on which to conclude that [one of ordinary skill in the art] would use JP705's engine bracket in the much smaller KR996 machine").

This argument is also unpersuasive. "The test for obviousness is not whether the features of a secondary reference may be bodily incorporated into the structure of the primary reference." *In re Keller*, 642 F.2d 413, 425 (CCPA 1981). "Rather, the test is what the combined teachings of the references would have suggested to those of ordinary skill in the art." *Id*. Here, the fact that the *specific structures* disclosed in JP705 may not necessarily function properly if bodily incorporated into the device in KR996 does not undermine the proposed combination. *See In re Mouttet*, 686 F.3d 1322, 1332 (Fed. Cir. 2012) ("It is well-established that a determination of obviousness based on teachings from multiple references does not require an actual, physical substitution of elements.").

Patent Owner's argument that the "location of the engine bracket in JP705 is also problematic" to the proposed combination is also unpersuasive because, "[u]nlike KR996, JP705's engine is located *behind the operator's cab* of the full-size machine." PO Resp. 39 (citing Fleming Decl. ¶¶ 94–97).

As noted by Petitioner, because the proposed combination does not rely on JP705 for the location of its engine (or engine bracket) relative to the operator cab, that feature in JP705 potentially differing from KR996 does not undermine the proposed combination. *See Bradium Techs. LLC v.*

Iancu, 923 F.3d 1032, 1050 (Fed. Cir. 2019) ("A finding of obviousness, however, cannot be overcome 'by attacking references individually where the rejection is based upon the teachings of a combination of references.'" (quoting *In re Merck & Co.*, 800 F.2d 1091, 1097 (Fed. Cir. 1986))); *see also* Pet. Reply 14 (discussing how "the Petition shows incorporating JP705's *engine bracket* (not its mainframe or engine location) in KR996's existing mainframe and engine location").

For the reasons above, we determine, in light of the complete record, that Petitioner has shown by a preponderance of the evidence that one of ordinary skill in the art at the time of the invention would have had reason to modify KR996 based on JP705, as proposed, that the articulated reasoning is supported by rational underpinning, and that there would have been a reasonable expectation of success.

b) Mainframe Limitations

Independent claim 1 recites limitations that require linkages and actuators to be pivotally attached to the mainframe.

As discussed above, we maintain the construction of "mainframe" in the independent claims under its plain and ordinary meaning as ***a primary supporting structure***, and we do not adopt Patent Owner's additional proposed requirement—i.e., that any "supporting structure" in the "mainframe" must be always present during all aspects of operation. *See* § IV.D.3.

As to the recitation of "a mainframe for supporting the loader, the mainframe having a first side and a second side" (limitation 1.2a), Petitioner provides the following annotated versions of Figures 9 and 10 of KR996:

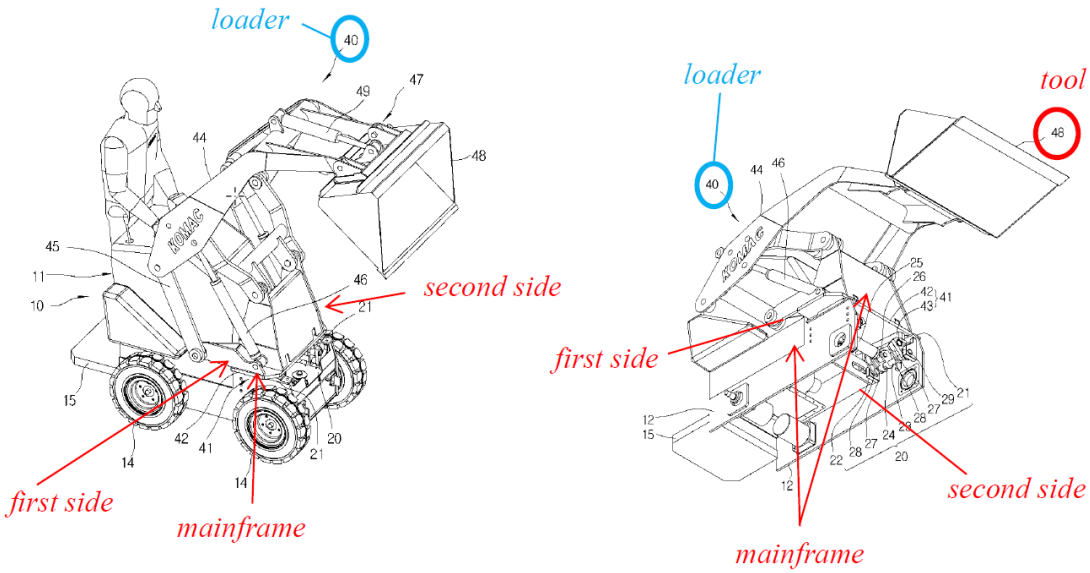

Pet. 30–31. In the annotated versions of Figures 9 and 10 of KR996 above, Petitioner added (1) red text and arrows identifying a "mainframe," (2) red text and arrows identifying a "first side," (3) red text and arrows identifying a "second side," (4) blue text and lines identifying a "loader," and (5) red text identifying a "tool." *Id.* Petitioner adds that KR996's mainframe "is *for supporting the* as the loader unit 40 including its boom 44 is attached to the mainframe by way of the linkages and actuator connecting to the loader arm." *Id.* at 32 (citing Velinsky Pet. Decl. ¶¶ 73–75).

As to the recitation of "a linkage pivotally attached to the first side of the mainframe and pivotally attached to the loader arm" (limitation 1.3), Petitioner provides the following annotated version of Figure 9 of KR996:

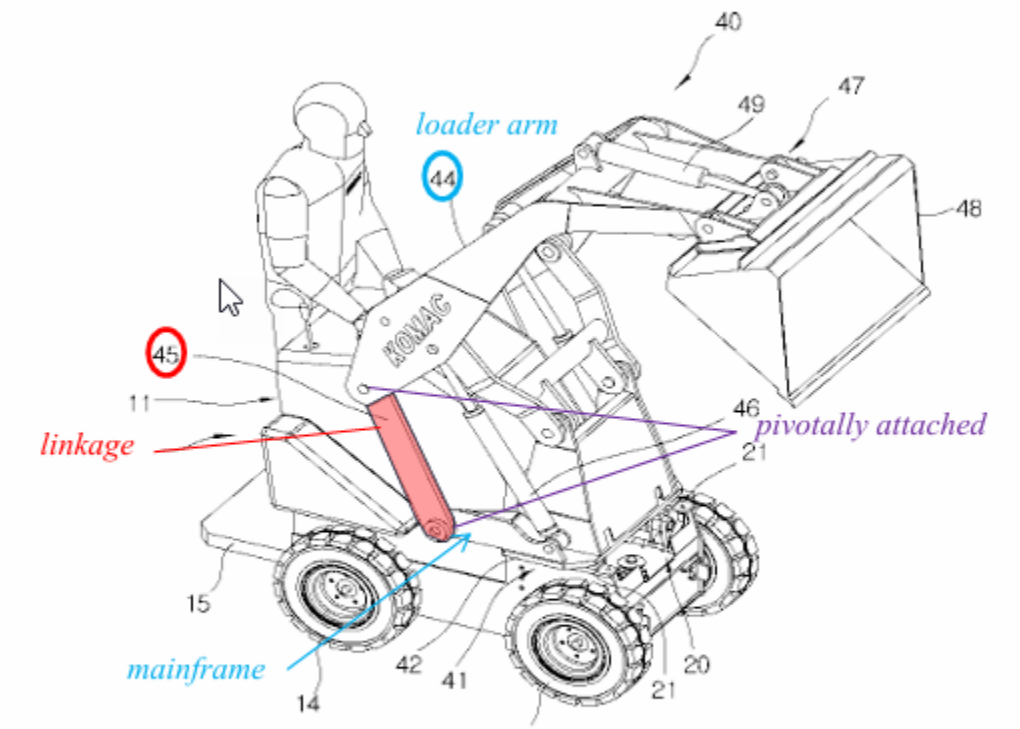

EX1005, Fig. 9 (annotated)

Pet. 36–37. In the annotated version of Figure 9 of KR996 above, Petitioner added (1) red text and a line identifying a "first linkage," (2) purple text and lines identifying where the first linkage is "pivotally attached," (3) blue text and lines identifying a "loader arm" and a "first side of the mainframe," and (4) blue text and an arrow identifying a "mainframe." Petitioner states that the "KR996 illustrates a link 45 (*linkage*) that is *pivotally attached to the first side of the mainframe* at a pivot point and *pivotally attached* to the boom 44 (*loader arm*) at a second pivot point." Pet. 36.

Finally, as to the recitation of "an actuator pivotally attached to the first side of the mainframe and pivotally attached to the first loader arm" (limitation 1.4) Petitioner provides the following annotated version of Figure 9 of KR996:

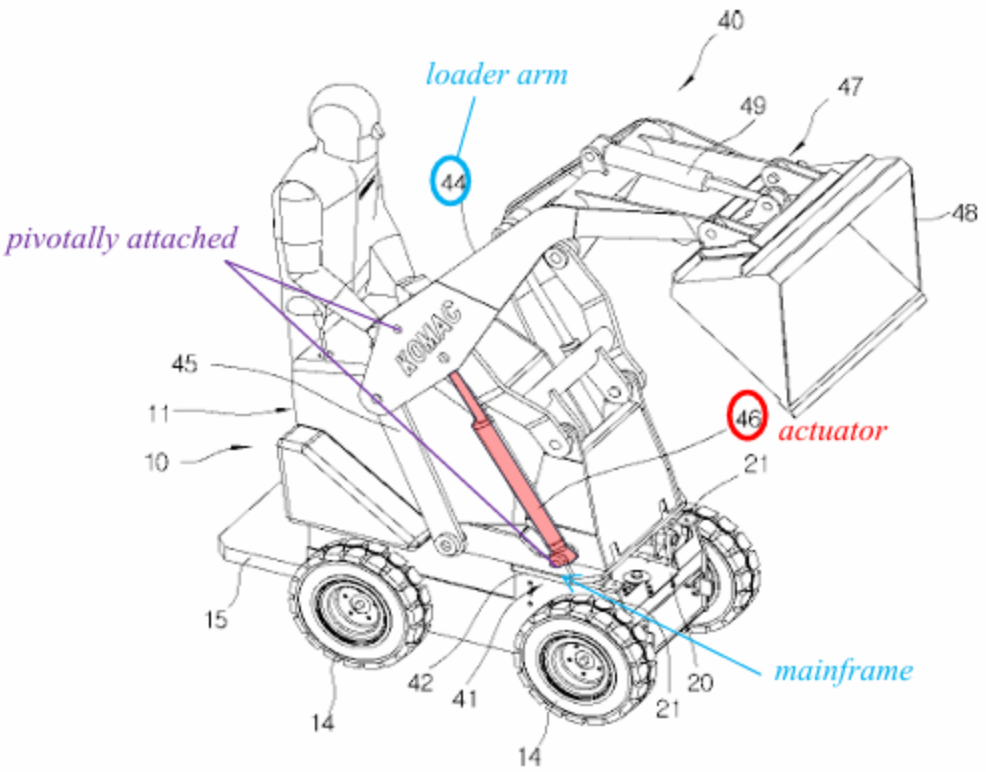

EX1005, Fig. 9 (annotated)

Pet. 38. In the annotated version of Figure 9 of KR996 above, Petitioner added (1) red text identifying an "actuator," (2) purple text and lines identifying where the actuator is "pivotally attached," (3) blue text and a line identifying a "loader arm," and (4) blue text and an arrow identifying a "mainframe."

Although Petitioner did not have our construction at the time of the filing of the Petition, Dr. Velinsky, in his Reply Declaration, and Petitioner

in the Reply explain why the previously identified structures would allegedly fall within the construction of "mainframe" discussed above. *See* Pet. Reply 10–13 (citing Velinsky Reply Decl. ¶¶ 2–4).

Patent Owner argues that KR996 fails to disclose or suggest the mainframe limitations. *See* PO Resp. 39–43; PO Sur-reply 19. Specifically, Patent Owner contends that, "to satisfy the pivotal-attachment limitations," Petitioner and Dr. Velinsky "are forced to assert that the removable fixture (41) of the loader arm *attachment* [in KR996] constitutes a part of the 'mainframe' of the machine." PO Resp. 40 (*e.g.*, citing Pet. 36–39, 43–47, 54–55; Velinsky Pet. Decl. ¶¶ 89–98, 109–114, 140–142). In support, Patent Owner provides the annotated version of Figure 1 of KR996 reproduced below:

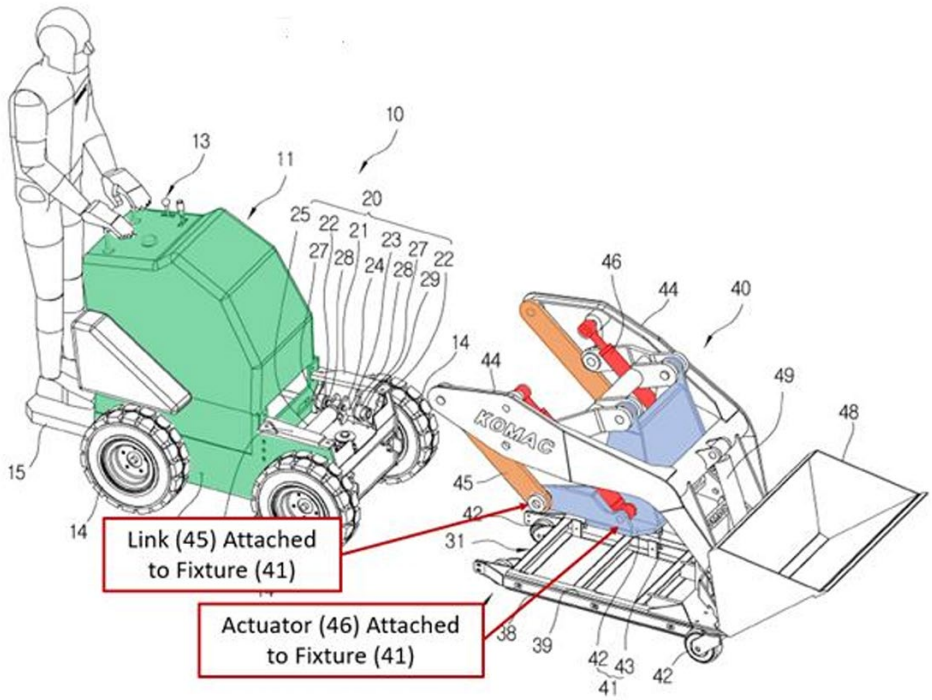

PO Resp. 41 (providing annotated Figure from Fleming Decl. ¶ 143). In the annotated version of Figure 1 of KR996 above, Patent Owner added (1)

green shading on certain structures, (2) a text box and arrow identifying "Link (45) Attached to Fixture (41)," (3) a text box and arrow identifying "Actuator (46) Attached to Fixture (41)," (4) orange shading identifying two links 45, (5) red shading identifying two actuators (i.e., boom cylinders) 46, and (6) blue shading identifying fixture 41.

Patent Owner argues that one of ordinary skill in the art "would not consider the detachable fixture (41)"—in blue shading above—"to be a part of the mainframe (i.e., primary supporting structure) of KR996's machine." PO Resp. 41 (citing Fleming Decl. ¶¶ 144–151); *see also* PO Sur-reply 19 (repeating that one of ordinary skill in the art "would not consider the detachable fixture (41) of the KR996 loader unit to be part of the primary supporting structure of KR996's machine"). Patent Owner contends that "KR996 expressly teaches that fixture (41) is routinely detached from the machine and left aside while the machine performs other work." PO Resp. 42 (citing Ex. 1005, code (57), ¶¶ 1, 11, 13; Fleming Decl. ¶ 148).

According to Patent Owner, one of ordinary skill in the art "would consider fixture (41) to be *secondary* structure, in contrast to the true 'mainframe,' main body (11), which is present during all modes of operation (shown in green highlight below)":

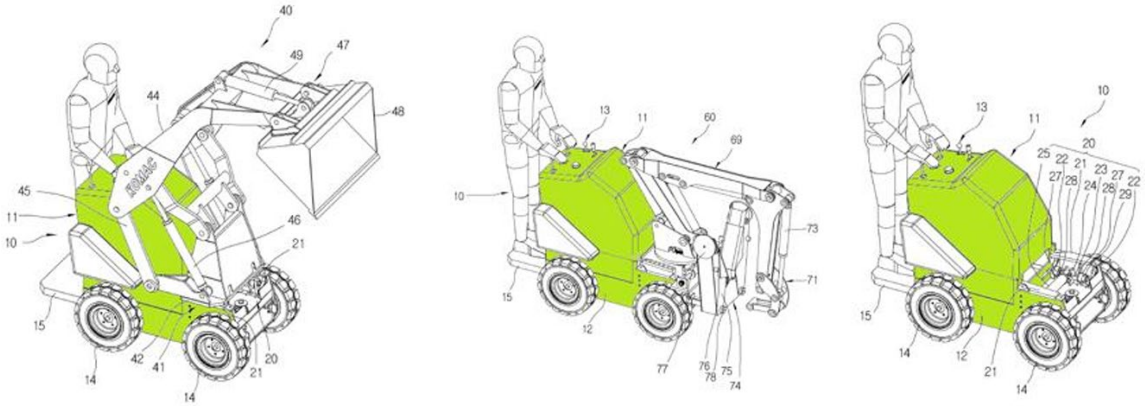

PO Resp. 42 (providing annotated Figure from Fleming Decl. ¶ 149). In the annotated versions of Figures 1, 9, and 19 of KR996 above, Patent Owner added green shading on certain structures.

The dispute between the parties for this ground hinges on one factual determination: whether one of ordinary skill in the art at the time of the invention would have understood fixture 41 in KR996 (shaded in blue in the annotated Figure 1 three paragraphs above) to be *part of* a "mainframe," along with the agreed-upon "mainframe" structures (shaded in green in both sets of annotated figures above).[14] For the reasons below, the complete record developed at trial more strongly supports Petitioner's position that one of ordinary skill in the art would have understood main body 11 *and* fixture 41 as a "mainframe" under the construction above.

Limitation 1.2a makes clear that the "mainframe" supports the "loader." When configured for loader operations (which Patent Owner acknowledges KR996 discloses[15]), main body 11 *and* fixture 41 in KR996

---

[14] We use certain annotated figures from KR996 provided by Patent Owner in the discussion here to illustrate more easily the difference of positions between the parties as to the structures in KR996 that would have been considered a "mainframe." We note, however, that the combined structures identified by Patent Owner (1) in green (agreed upon as part of the "mainframe") and (2) in blue (identified *only by Petitioner* as part of the "mainframe") appear to be a subset of the structures identified by Petitioner as the "mainframe." *See, e.g.*, Pet. Reply 12; Velinsky Reply Decl. ¶ 4; Pet. 32–33. Put simply, Petitioner's assertions as to the particular structures in KR996 comprising the "mainframe" control over Patent Owner's *presented understanding* of Petitioner's positions.

[15] *See* PO Resp. 22 (discussing a "fifth mode" in which "the machine is operated with the loader attached to, for example, clear construction debris from the site").

are the *primary supporting structure* for the loader (i.e., a "mainframe" as construed above) in that those structures provide the principal weight-bearing frame supporting the loader unit 40 in KR996. Pet. 30–32 (citing Velinsky Pet. Decl. ¶¶ 73–75); *see, e.g.*, Ex. 1005, Figs. 7–9 (showing the vehicle of KR996 in operation).

The cited testimony of Dr. Velinsky supports this position. *See* Velinsky Pet. Decl. ¶ 74 ("KR996 provides a *mainframe* that includes main body 11 of KR996 and its sides 12 as well as other portions of KR996's illustrated vehicle such as those portions that support the loader by providing attachment to the actuator and links that mount the loader to the vehicle), ¶ 74 ("KR996 describes embodiments of its body in two portions, when in operation the mainframe of the vehicle is in one piece providing support for the loader."); *see* Velinsky Reply Decl. ¶ 2 ("The primary supporting structure of the KR996 compact utility loader is thus the combination of the body 11 and the fixture 41.").

Both fixture 41 and main body 11 are ***primary*** *supporting structure* in KR996 in that (1) fixture 41 directly supports the weight of loader arms 44 (which directly support bucket attachment 47 and bucket 48) and (2) main body 11 *in turn* directly supports fixture 41. Pet. Reply 11 ("the primary supporting structure of KR996's CUL (not the vehicle 10 alone) is the combination that includes at least body 11 and fixture 41") (citing Velinsky Pet. Decl. ¶ 74)); Velinsky Reply Decl. ¶ 2 ("Both the vehicle and the loader unit include frame portions, the vehicle has the body 11 and the loader unit has the fixture 41. And it is the fixture 41 that directly supports the loader arms (boom) 44, which further connects and supports the bucket attachment 47 and bucket 48."). The cited testimony of Dr. Velinsky supports this

position as well, with Dr. Velinsky noting that "[e]ither of these two frame portions, considered alone, would be incomplete for the compact utility loader" such that "both the body 11 and the fixture 41 are critical and important to providing a support structure of the compact utility loader." Velinsky Reply Decl. ¶ 2.

Patent Owner's and Dr. Fleming's positions at trial have relied *directly and exclusively* on the "always present" requirement to attempt to distinguish KR996 and argue that one of ordinary skill in the art would *not* have considered fixture 41 in KR996 as part of a "mainframe" and instead would have considered fixture 41 as a "secondary" supporting structure. *See, e.g.*, PO Resp. 42 (arguing that one of ordinary skill in the art "would consider fixture (41) to be *secondary* structure, in contrast to the true 'mainframe,' main body (11), which is present during all modes of operation"); Fleming Decl. ¶ 145 (arguing that one of ordinary skill in the art "would understand that the *primary* supporting structure of KR996 is the 'main body (11)' of the machine that is present during *all* phases of the machine's operation"), ¶ 148 ("KR996 expressly teaches that fixture (41) is routinely detached from the machine and left aside while the machine performs other work."), ¶ 149 (arguing that one of ordinary skill in the art "would consider fixture (41) to be secondary structure, in contrast to the true 'mainframe'—that being the 'main body (11)'—which is present during all modes of operation"). For the reasons above (*see* § IV.D.3), however, Patent Owner has not demonstrated why we should adopt the "always present" requirement into the construction of "mainframe." Thus, Patent Owner's arguments based on the "always present" requirement do not

identify a deficiency in Petitioner's positions as to the "mainframe" limitations.

Patent Owner seeks to focus the analysis solely on times during operations when vehicle 10 (and its main body 11) *is separated from* loader unit 40 (and its fixture 41) (PO Resp. 39–43); but, at those times, main body 11 in KR996—which even Patent Owner agrees is part of the recited "mainframe" (*id.* at 42)—is not a "primary supporting structure" of (then-absent) loader 40. Moreover, the record does not support a "secondary" status for fixture 41 as a supporting structure in the compact utility loader of KR996 in that, as discussed above, fixture 41 *directly* supports the weight of the moving loader structures, with fixture 41 *then* transferring that load to main body 11. *See* Ex. 1005 ¶ 43 (disclosing that fixture 41 is pressed against main body 11), ¶ 45 (disclosing "pressing and fixing" fixture 41 onto main body 11). On this issue, we agree with Dr. Velinsky, who states that main "body 11 does not directly support the loader arms (boom 44), that is done by the fixture 41." Velinsky Reply Decl. ¶ 3.

For the reasons above, we find, based on the complete record, that Petitioner has shown by a preponderance of the evidence that KR996 discloses the mainframe limitations.

c) Remaining Limitations

We have reviewed the challenge with respect to the remaining limitations of independent claim 1 and based on the complete record, that Petitioner has demonstrated by a preponderance of the evidence that KR996 and JP705 discloses the remaining limitations. We also determine that, to the extent necessary, Petitioner has adequately explained why one of ordinary skill in the art would have had reason to modify KR996 and JP705

as proposed and that there would have been a reasonable expectation of success. Patent Owner does not present arguments for the remaining limitations.

d) Objective Indicia of Nonobviousness

(1) Legal Standards

Objective evidence of non-obviousness "may often be the most probative and cogent evidence in the record" and "may often establish that an invention appearing to have been obvious in light of the prior art was not." *Transocean Offshore Deepwater Drilling, Inc. v. Maersk Drilling USA, Inc.*, 699 F.3d 1340, 1349 (Fed. Cir. 2012). Thus, notwithstanding what the teachings of the prior art would have suggested to one skilled in the art, secondary considerations (objective evidence of non-obviousness) may lead to a conclusion that the challenged claims would not have been obvious. *In re Piasecki*, 745 F.2d 1468, 1471–72 (Fed. Cir. 1984). Our obviousness analysis includes consideration and weighing of Patent Owner's objective indicia of non-obviousness.

In order to accord substantial weight to secondary considerations in an obviousness analysis, "the evidence of secondary considerations must have a 'nexus' to the claims, i.e., there must be 'a legally and factually sufficient connection' between the evidence and the patented invention." *Henny Penny Corp. v. Frymaster LLC*, 938 F.3d 1324, 1332 (Fed. Cir. 2019) (quoting *Demaco Corp. v. F. Von Langsdorff Licensing Ltd.*, 851 F.2d 1387, 1392 (Fed. Cir. 1988)); *Quanergy Sys., Inc. v. Velodyne Lidar USA, Inc.*, 24 F.4th 1406, 1417 (Fed. Cir. 2022).

Although the patent owner bears the initial burden of proving a nexus (*WMS Gaming Inc. v. Int'l Game Tech.*, 184 F.3d 1339, 1359 (Fed. Cir. 1999)), a presumption of nexus may be appropriate if the patent owner shows "the asserted objective evidence is tied to a specific product and that product 'embodies the claimed features, and is coextensive with them.'" *Polaris Indus, Inc. v. Arctic Cat, Inc.*, 882 F.3d 1056, 1072 (Fed. Cir. 2018) (quoting *Brown & Williamson Tobacco Corp. v. Philip Morris Inc.*, 229 F.3d 1120, 1130 (Fed. Cir. 2000) (emphasis added)); *Quanergy*, 24 F.4th at 1417. On the other hand, "[w]hen the [product] is not coextensive with the patented invention—for example, if the patented invention is only a component of a commercially successful machine or process," the patent owner is not entitled to a presumption of nexus. *Demaco*, 851 F.2d at 1392.

A patent owner may establish nexus, either through (1) the use of a rebuttable presumption that arises when certain conditions are met or (2) a direct showing of nexus. In the first, a patent owner may rely on a rebuttable presumption of nexus as follows:

> As first recognized in *Demaco* . . . , a patentee is entitled to a rebuttable presumption of nexus between the asserted evidence of secondary considerations and a patent claim if the patentee shows that the asserted evidence is tied to a specific product and that the product "is the invention disclosed and claimed." 851 F.2d at 1392 (emphasis added). That is, presuming nexus is appropriate "when the patentee shows that the asserted objective evidence is tied to a specific product and that product 'embodies the claimed features, and is coextensive with them.'" *Polaris Indus., Inc. v. Arctic Cat, Inc.*, 882 F.3d 1056, 1072 (Fed. Cir. 2018) (quoting *Brown & Williamson Tobacco Corp. v. Philip Morris Inc.*, 229 F.3d 1120, 1130 (Fed. Cir. 2000)) . . .

> Whether a product is coextensive with the patented invention, and therefore whether a presumption of nexus is appropriate in a given case, is a question of fact.

Fox Factory, Inc. v. SRAM LLC, 944 F.3d 1366, 1373 (Fed. Cir. 2019).

The court in *Fox Factory* further explained, with respect to a presumption of nexus, that "the degree of correspondence between a product and a patent claim falls along a spectrum," and that, "[a]lthough we do not require the patentee to prove perfect correspondence to meet the co-extensiveness requirement, what we do require is that the patentee demonstrate that the product is essentially the claimed invention." *Id.* at 1374. The court in *Fox Factory* rejected the patent owner's argument that the co-extensiveness requirement is simply an inquiry into "whether the patent claims broadly cover the product that is the subject of the evidence of secondary considerations." *Id.* at 1377. Thus, simply showing that a patent claim broadly covers the commercial product being asserted as objective evidence of non-obviousness is not enough to show they are coextensive. *Id.* That is because "[a] patent claim is not coextensive with a product that includes a 'critical' unclaimed feature that is claimed by a different patent and that materially impacts the product's functionality." *Id.* at 1375. In contrast, "if the unclaimed features amount to nothing more than additional insignificant features, presuming nexus may nevertheless be appropriate." *Id.* at 1374. Based on the facts of the case in *Fox Factory*, the court found that "nexus may not be presumed" because "there are one or more features not claimed by the [challenged patent] that materially impact the functionality" of the products on which patent owner's presumption

argument is based and the court rejected arguments that the patent claims broadly cover the product. *Id.* at 1376–77.

"A finding that a presumption of nexus is inappropriate does not end the inquiry into secondary considerations," however. *Fox Factory*, 944 F.3d at 1373. "To the contrary, the patent owner is still afforded an opportunity to prove nexus by showing that the evidence of secondary considerations is the 'direct result of the unique characteristics of the claimed invention.'" *Id.* at 1373–74 (quoting *In re Huang*, 100 F.3d 135, 140 (Fed. Cir. 1996)). "Where the offered secondary consideration actually results from something other than what is both claimed and novel in the claim, there is no nexus to the merits of the claimed invention," meaning that "there must be a nexus to some aspect of the claim not already in the prior art." *In re Kao*, 639 F.3d 1057, 1068–69 (Fed. Cir. 2011).

Ultimately, we must weigh Patent Owner's objective evidence in the context of whether the claimed invention as a whole would have been obvious to a skilled artisan. *WBIP, LLC v. Kohler Co.*, 829 F.3d 1317, 1331–32 (Fed. Cir. 2016). Only if the patent owner presents a prima facie case of nexus does the burden of production shift to the patent challenger to adduce evidence showing that any commercial success or industry praise was due to extraneous factors other than the patented invention. *Demaco*, 851 F.2d at 1393.

(2) Patent Owner's Argument

Patent Owner contends that evidence of secondary considerations show that the claimed invention is non-obvious. PO Resp. 62–81.

As we explained when granting in part of Petitioner's Motion to Exclude, Patent Owner's secondary considerations arguments cite to

attorney arguments concerning secondary considerations in reexamination prosecution histories (Exs. 1029, 1030, 1031). *See* § III. Patent Owner's citations are not pin-point citations and encompass many pages of attorney argument. *See, e.g.*, PO Resp. 69 (citing Ex. 1030, 36–57 (21 pages of attorney argument)). Because the citations encompass many pages, it is difficult for us to ascertain what information in the cited pages Patent Owner is relying upon.

It is not the responsibility of the Board to develop undeveloped arguments hinted at in the papers. *See United States v. Dunkel*, 927 F.2d 955, 956 (7th Cir. 1991) ("Judges are not like pigs, hunting for truffles buried in briefs."); *DeSilva v. DiLeonardi*, 181 F.3d 865, 866–67 (7th Cir. 1999) ("A brief must make all arguments accessible to the judges, rather than ask them to play archaeologist with the record."). For this reason, our rules prohibit incorporating arguments by reference from one document into another document. 37 C.F.R. § 42.6 ("Arguments must not be incorporated by reference from one document into another document.").

In as much as Patent Owner is attempting to incorporate attorney arguments from the prosecution history into its substantive papers, when evaluating the merits of the Patent Owner's evidence of secondary considerations, we will not consider the attorney argument from the reexamination prosecution history that are not sufficiently set forth in the Patent Owner's substantive papers in this proceeding. Even if we were to consider such arguments, they would be mere attorney argument. But mere attorney argument and conclusory statements that are unsupported by factual evidence are entitled to little probative value. *In re Geisler*, 116 F.3d 1465, 1470 (Fed. Cir. 1997); *Elbit Sys. of Am., LLC v. Thales Visionix, Inc.*, 881

F.3d 1354, 1359 (Fed. Cir. 2018) ("'[A]ttorney argument is not evidence' and cannot rebut other admitted evidence." (quoting *Icon Health & Fitness, Inc. v. Strava, Inc.*, 849 F.3d 1034, 1043 (Fed. Cir. 2017))).

To the extent that Patent Owner relies upon the evidence embedded in the attorney argument, we granted Petitioner's Motion to exclude the embedded documents and deposition testimony from Exhibits 1029, 1030, and 1031 when relied upon by Patent Owner for evidence of secondary considerations. We, thus, find Patent Owner's secondary consideration arguments based solely on the embedded documents and deposition testimony unpersuasive. Below, we address the remainder of Patent Owner's arguments and evidence.

(3) Reexamination Prosecution Histories

Patent Owner argues that Petitioner was obligated to address in the Petition evidence of secondary considerations that was presented during the reexaminations of the '386 Patent. PO Resp. 63–64. Patent Owner asserts: "Kubota's failure to address Vermeer's substantial objective indicia evidences should weigh in favor of the validity of Vermeer's patent." *Id.* at 64. Patent Owner also argues that "[c]urrent guidelines require a decision contradicting a previous USPTO ruling to state in detail why overturning the earlier decision is warranted." PO Sur-reply 30–31 (citing Memorandum, "PTAB Consideration of Prior Findings of Fact and Conclusions of Law" (Sept. 16, 2025)[16]). According to Patent Owner, "[b]ecause Kubota has provided no compelling basis to contradict the Office's prior findings, the

[16] Available at https://www.uspto.gov/sites/default/files/documents/Memo_re_prior_findings_of_fact_and_conclusions_of_law_9_16_25.pdf.

Board should find that the secondary-indicia evidence supports a finding of non-obviousness here." PO Sur-reply 31.

We are not persuaded by Patent Owner that because the reexamination examiner found the evidence of secondary considerations overcame the rejections at issue in the reexamination that we are required to do the same here. The Memorandum states:

> if the Board reaches an initial or final decision on a finding of fact or conclusion of law that is different than the prior finding or conclusion of the Office, district court, or the ITC, the Board shall explain in the institution or final written decision why a different outcome is warranted.

The Memorandum requires that the Board explain why a different outcome is warranted but does not mandate that the Board come to the same conclusion.

A different outcome as to the patentability of the claims is warranted here because we are not evaluating the same ground of unpatentability that the examiner evaluated during the reexaminations. *See, e.g.*, Ex. 1030, 10–16 (examiner's explanation as to why the evidence of secondary considerations overcame the *prima facie* showing of obviousness of a combination replacing a radial-lift arm of Dingo 322 Operator's Manual, Dingo 322 Parts Catalog's compact utility load with a vertical-lift arm of JP11-140900 (Komatsu Ltd.) skid steer). Petitioner's grounds of unpatentability here rely primarily upon KR966, which is a reference that was not evaluated during the reexaminations.

A further difference exists between reexamination and the *inter partes* reviews in that the Federal Rules of Evidence apply to *inter parte* reviews.

37 C.F.R. § 42.62. Much of the secondary considerations evidence offered here is inadmissible hearsay under FRE 802 in this proceeding. *See* § III.

(4) Nexus

To establish nexus, Patent Owner argues that Vermeer's CTX50, Vermeer's CTX100, and Toro's TX100 are "covered by the '386 Patent." PO Resp. 65 (citing Ex. 2016 ¶ 181; Ex. 2024; Ex. 2025). Petitioner responds that Patent Owner fails to establish the required nexus. Pet. Reply 26–27.

We do not need to reach a determination as whether Patent Owner has established the requisite nexus because we find that the admissible portion of Patent Owner's evidence of secondary considerations, even if nexus were presumed to exist, does not outweigh Petitioner's showing of obviousness.

(5) Commercial Success and Industry Praise

Patent Owner argues that evidence submitted during the reexaminations demonstrates commercial success. PO Resp. 66 (citing Ex. 1029, 185; Ex. 1030, 128, 302). To the extent that Patent Owner relies on inadmissible hearsay evidence from the reexamination prosecution histories to support its argument, we find unpersuasive Patent Owner's arguments of commercial success and industry praise. *See id.* (citing Ex. 1029, 186 (reexamination presentation slide discussing an Innovative Iron Award).

Patent Owner also submits an article from Compact Equipment Magazine to show alleged industry praise for Toro's and Patent Owner's compact utility loaders with vertical lift. PO Resp. 66 (citing Ex. 2026, 1–2). We give this evidence some weight, but find that this article does not outweigh Petitioner's showing of obviousness over the prior art.

(6) Skepticism at the Time of Invention

Patent Owner argues that "evidence submitted to the Patent Office during the reexaminations further demonstrated that at the time of [Patent Owner's] invention, there was skepticism within the industry that vertical lift was a viable option for compact utility loaders due to their small size and complexity." PO Resp. 67–68 (citing Ex. 1030, 54; Ex. 1029, 34; Ex. 2004, ¶ 7, Ex. 2005, Fig. 3). To extent that Patent Owner relies on inadmissible hearsay evidence from the reexamination prosecution histories, we find this argument unpersuasive.

Patent Owner also points to a statement from U.S. Patent Publication No. 2016/0244937 A1, which reads "the use of such high lift loader arms on a compact utility loader has been considered difficult if not impossible due to size and durability constraints." PO Resp. 68 (quoting Ex. 2004 ¶ 7). We give this evidence some weight, but find that it does not outweigh Petitioner's showing of obviousness over the prior art.

(7) Unexpected Results

Patent Owner argues that "the prosecution histories relating to the '386 Patent also contained evidence showing that the claimed invention surpassed expectations." PO Resp. 68. Patent Owner relies upon no evidence other than inadmissible hearsay evidence from the reexamination prosecution histories to support its argument. We, thus, are not persuaded by Patent Owner's argument of unexpected results and thus, give this argument little weight.

(8) Long-felt but Unresolved Need

Patent Owner argues that "the prosecution histories also contain significant evidence of a long-felt need for a solution to the problem of low

lift capacity on compact tool carriers." PO Resp. 69–73 (citing Ex. 1029, 121, 173; Ex. 1030, 16, 39–57; Ex. 1031, 16). Patent Owner relies upon no evidence other than inadmissible hearsay evidence from the reexamination prosecution histories to support this argument. We, thus, are not persuaded by Patent Owner's argument of long-felt but unresolved need and thus, give this argument little weight.

(9) Copying

Patent Owner contends that when Petitioner "designed its first compact utility loader [(the SCL1000)] it intentionally copied the vertical-lift loader arm configuration claimed in the '386 Patent." PO Resp. 73; *see also id.* at 75. Patent Owner argues that, because Petitioner's dealer surveys indicate a desire for a vertical-lift compact utility loader and Petitioner performed competitor research, including researching Patent Owner's compact utility loader, Petitioner's SCL1000 must be a copy of the claimed invention of the '386 patent. *Id.* at 73–80. Patent Owner's evidence, however, does not persuasively show that Petitioner's SCL1000 is a copy of claimed invention of '386 patent. *See id.* at 80–81 (citing Ex. 2027, 50–52, 114); *see also* Pet. Reply 28 ("Petitioner's commercially available CUL differs from PO's CUL and this patent."). Although Patent Owner's evidence broadly outlines design requirements for a vertical-lift compact utility loader, the evidence does not depict or otherwise provide sufficient details so as to show that the SCL1000 is a copy of claimed invention of '386 patent. *See* Ex. 2027, 50–52, 114; *see also Liqwd, Inc. v. L'Oreal USA, Inc.*, 941 F.3d 1133, 1137 (Fed. Cir. 2019) ("Evidence of copying may include internal documents, direct evidence such as photos of patented

features or disassembly of products, or access and similarity to a patented product."). We, thus, give Patent Owner's evidence of copying little weight.

(10) Conclusion as to Objective Indicia

We have considered, as a whole, all of Patent Owner's arguments and admissible evidence concerning secondary considerations. Although we give some weight to Patent Owner's admissible evidence of industry praise and skepticism at the time of invention, we do not find this evidence outweighs Petitioner's showing of obviousness.

e) Conclusion as to the Independent Claim 1

For the reasons discussed above, the evidence presented by Petitioner strongly indicates that the independent claims would have been obvious based on KR996 and JP705. For the reasons also discussed above, if we were to presume nexus, we give some weight to Patent Owner's admissible evidence of industry praise and skepticism at the time of invention in favor of nonobviousness. When considering all the evidence of obviousness and nonobviousness together (*see In re Cyclobenzaprine Hydrochloride Extended-Release Capsule Patent Litig.*, 676 F.3d 1063, 1079 (Fed. Cir. 2012)), we find Petitioner's strong evidence of obviousness outweighs Patent Owner's objective indicia of nonobviousness. Thus, we conclude Petitioner has demonstrated by a preponderance of the evidence that independent claim 1 would have been obvious based on KR996 and JP705.

4. Dependent Claim 2

Claim 2 depends from claim 1 and additionally recites "wherein the mainframe incorporates a single weldment." Ex. 1001, 6:57–58.

As to the scope of claim 2, Patent Owner's argument implies that the additional limitation requires that all of the portions of the mainframe

constitute a single, unitary weldment. PO Resp. 43–44; PO Sur-reply 20–21. Petitioner, in contrast, asserts that "incorporates" means to include such the claim does not preclude the mainframe from having some portions formed as a single weldment, and other portions fastened in other manners. Pet. Reply 16–18 (citing Ex. 1053 (Oxford Dictionary of English, third edition) at 4 (defining "incorporate" as "include")).

The complete record supports Petitioner's position. Specifically, based on the plain meaning of "incorporates," the claims require that the mainframe *includes*—rather than *is* or *constitutes*—a single weldment. *See* Pet. Reply 16 (citing Ex. 1053, 4). Patent Owner relies on paragraph 152 of Dr. Fleming's Declaration to support its narrower proposed construction, but Dr. Fleming merely repeats Patent Owner's claim construction position without evidence to support that position. *See* Fleming Decl. ¶ 152 (the claim "requires that the 'mainframe incorporates a single weldment.' This additional claim limitation requires that all of the portions of the mainframe constitute a single, unitary weldment, as shown, for example, in Figure 4 of the [challenged] patent." (with no citations)).

Although Dr. Fleming asserts the '386 Patent's Figure 4 embodiment shows a "mainframe [that] constitute[s] a single, unitary weldment," Dr. Fleming fails to explains the basis for that assertion. *See* Ex. 2016 ¶ 152. As noted above, the Specification discloses an embodiment in which the "mainframe" is a "single weldment," but the Specification does not indicate that Figure 4 shows that embodiment. *See* Ex. 1001, 4:5–11. Moreover, even if Figure 4 *does* show a single-weldment embodiment, we will not limit the claims to that embodiment solely on that basis, especially when the claim language recites a broader requirement. *See Anchor Wall Sys., Inc. v.*

Rockwood Retaining Walls, Inc., 340 F.3d 1298, 1306–07 (Fed. Cir. 2003) (stating that "the mere fact that the patent drawings depict a particular embodiment of the patent does not operate to limit the claims to that specific configuration").

In the Sur-reply, Patent Owner asserts that we should not reach this issue because it was not raised in the Petition. *See* PO Sur-reply 17–19. According to Patent Owner, at that time, Petitioner only argued "that [] it would have been obvious to weld 'portions' of KR996's frame together (to form a single weldment)." *Id.* at 18 (citing Pet. 42–43). We disagree.

Although Patent Owner is correct that Petitioner did not expressly present a claim construction for the dependent claims in the Petition, there, Petitioner clearly provided *two alternative bases* for that claim: one applying Petitioner's current construction and one applying Patent Owner's. *See, e.g.,* Pet. 42–43 (citing Velinsky Pet. Decl. ¶¶ 103–108). Specifically, Petitioner first presented an argument under its own *broader* construction, stating that one of ordinary skill in the art "would have found it obvious to form other portions of the mainframe of KR996 as part of a *single weldment* as use of welding to join components of a support frame for a loader apparatus was a well-known method of attachment." Pet. 42 (citing Velinsky Pet. Decl. ¶ 105). Second, after applying the broader construction, Petitioner presents an *alternative* argument applying the same narrower claim construction that Patent Owner ended up presenting in the Response:

> To the extent Patent Owner argues that certain components of the mainframe are required to be coupled by a weldment, JP705 illustrates a main frame (*mainframe*) that consists of one *single weldment*. EX1006, [0019] ("The main frame 1 is constructed from cast steel for welding construction

> . . .”). Providing the mainframe of KR996 as a welded structure as taught in JP705 would have been a predictable application of JP705’s general teachings of benefits of welding, as discussed above with reference to an engine bracket. EX1003, ¶107 citing EX1010 implementing a unitary frame on a compact loader.

Pet. 43. Because Petitioner presented its broader construction in the Petition, we consider the issue of claim construction in this Final Written Decision.

Patent Owner also contends that Petitioner’s broader construction should be rejected because “it reads the term ‘single’ out of the limitation entirely.” PO Sur-reply 18. According to Patent Owner, “[a]ny construction that would allow the mainframe to include ‘some portion**s** formed as a single weldment’ necessarily requires the term ‘single’ to mean *at least* one, rather than *only* one.” *Id.* (quoting Pet. Reply 16 n.12). We again disagree.

One exemplary “mainframe” falling within the scope of Petitioner’s construction (with which we agree) could—contrary to Patent Owner’s argument—comprise *only one* weldment (made of more than one portion) and have other portions that are held to the “mainframe” with, for example, nuts and bolts. *See* Pet. 42 n.7 (discussing nuts and bolts as possible other fasteners in the context of this claim). For example, if the “mainframe” was made up of five separate subcomponents (“portions”) A through E, “some portions” (using Patent Owner’s language)—say A through C—could be welded together in a “single weldment,” and portions D and E could be fastened with nuts and bolts. That embodiment would fall within the scope of Petitioner’s proposed construction and, contrary to Patent Owner’s argument, still have *only one* weldment.

Patent Owner argues that Petitioner's broader construction "contradicts the USPTO's prior interpretation of this term, which has consistently been construed as a mainframe that '**comprises a single part**.'" PO Sur-reply 19 (citing Ex. 1031, 402).

As background, in a prior reexamination certificate issued April 12, 2018, the '386 patent included newly added claim 63, which had the same additional limitation: "wherein the mainframe incorporates a single weldment." Ex. 1031 at 551. In a Detailed Request for *Ex Parte* Patent Reexamination filed the following day, as to claim 63, the requester relied on a parts catalog showing a mainframe allegedly consisting of a "single part." *Id.* at 512, 529 (showing filing date). In the first Office Action after granting the next reexamination, the examiner essentially agreed with the requester's argument as to the parts catalog disclosing a mainframe "compris[ing] a single part." *Id.* at 402. Patent Owner did not separately argue against that finding in the latter reexamination. *Id.* at 184–186.

The record here does not show that the USPTO agreed with Patent Owner's narrower construction of the claim language here. Instead, we view the reexamination examiner as merely acknowledging that a mainframe made of a "single part" (apparently welded) *clearly* falls within the scope of the claim language at issue in that it satisfies *both* possible constructions: (1) that the mainframe *includes* a single weldment (i.e., Petitioner's proposed construction here) and (2) that the mainframe *is* a single weldment (Patent Owner's proposed construction). Because Patent Owner's proposed construction is subsumed within the scope of Petitioner's proposed construction, and the reexamination examiner found that the prior art fell

within the *narrower* construction, the Examiner did not have to address the particular claim construction issue before us now.

Turning now to the application, Petitioner argues that one of ordinary skill in the art "would have found it obvious to form other portions of the mainframe of KR996 . . . as a *single weldment* as use of welding to join components of a support frame for a loader apparatus was a well-known method of attachment." Pet. 42 (citing Velinsky Pet. Decl. ¶ 105). Petitioner adds that one of ordinary skill in the art "would recognize that there are known trade-offs in the design choice between a single weldment and attachment by, for example, by nuts and bolts," such as "aesthetics, manufacturability, [and] reliability." Pet. 42 (citing Velinsky Pet. Decl. ¶ 106). According to Petitioner, "this formation of JP705's mounting parts integrally with the mainframe through conventional welding also prepared the receiving piece as advantageously, a 'smooth, continuous surface.'" Pet. 26 (citing Velinsky Pet. Decl. ¶¶ 57–60).

Patent Owner does not address Petitioner's first argument, which applies Petitioner's construction of the single weldment limitation (which we adopt above). Instead, Patent Owner presents arguments as if Petitioner had *only* argued a proposed modification of welding main body 11 and fixture 41 in KR996 into a "single weldment"—i.e., under Patent Owner's narrower proposed construction. *See, e.g.*, PO Resp. 43 (stating that Petitioner and Dr. Velinsky "argue that [one of ordinary skill in the art] would have been motivated to weld the main body (11) and fixture (41) together to create a single weldment mainframe"); PO Sur-reply 20 (arguing that Petitioner "fails to provide any motivation for a POSITA to weld the fixture (41) to the main body (11) of the KR996 machine").

On the complete record, we find that Petitioner has shown by a preponderance of the evidence that the combination of KR996 and JP705 discloses or suggests the additional limitation of claim 2, under Petitioner's broader construction (which we apply above). As noted by Petitioner (Pet. Reply 16), Dr. Fleming acknowledges that both KR996's fixture 41 and main body 11 are most likely entirely welded. Ex. 1043 (Fleming Depo. Tr.), 113:12–114:9. We agree with that assessment and find that KR996 implicitly teaches main body 11 and fixture 41 as including at least some welded sub-structures. Because the record supports Petitioner's position that main body 11 and fixture 41 in KR996 together constitute a "mainframe" and that *both* fixture 41 and main body 11, individually and collectively, implicitly include at least some welded sub-structures, that logically leads to a determination that the "mainframe" *includes* a "single weldment."

For these reasons, we determine, based on the complete record, including the objective indicia of nonobviousness, that Petitioner has demonstrated by a preponderance of the evidence that claim 2 would have been obvious based on KR996 and JP705.

5. Dependent Claims 3–13, 21, 22, and 64

For dependent claims 3–13, 21, 22, and 64, Petitioner contends that KR996 combined with JP705 satisfies each limitation. Pet. 21–58. Patent Owner does not present any arguments specifically addressing these dependent claims but rather relies on the arguments addressing the independent claims. *See* PO Resp. 37–43.

We determine, based on the complete record, that KR996 and JP705 discloses the subject matter of claims 3–13, 21, 22, and 64. We also determine that, to the extent necessary, Petitioner has adequately explained

why one of ordinary skill in the art would have had reason to modify KR996 with JP705 and that there would have been a reasonable expectation of success. Based on the complete record, including the objective indicia of nonobviousness, we determine that Petitioner has demonstrated by a preponderance of the evidence that claims 3–13, 21, 22, and 64 would have been obvious based on the combination of KR996 and JP705.

F. Ground 2 – KR996, JP705, and McIlwraith

Claim 65 depends from claim 64, which in turn depends from claim 1. Ex. 1001, Reexam. Cert. C2 1:55–57. Claim 65 additionally recites "wherein least a portion of the operator platform is forward of the rear end of the mainframe." *Id.*

Petitioner contends claim 65 is unpatentable over KR996, JP705, and McIlwraith. Pet. 59–62. Petitioner relies upon McIlwraith to teach the additional limitation of claim 65. *Id.*

Patent Owner makes no arguments directed to the additional limitation and argues that claim 65 is patentable for the same reasons that claims 1 and 64 are patentable. PO Resp. 44.

After reviewing Petitioner's evidence and analysis, we determine that Petitioner shows by a preponderance of the evidence that claim 65 is unpatentable over KR996, JP705, and McIlwraith.

G. Ground 3 — KR996, JP705, and Beltrami

Petitioner challenges independent claim 15 and dependent claims 17, 19, 20, 23–30, 66, and 67 as obvious based on KR996, JP705, and Beltrami. Pet. 64–90; Pet. Reply 19–26.

Patent Owner provides arguments specifically addressing this asserted ground. PO Resp. 45–62; PO Sur-reply 22–27.

1. Overview of Beltrami

Beltrami discloses "a digging and lifting device of the type comprising a grabbing and excavating bucket." Ex. 1008, 1:6–8.

Figure 3 of Beltrami is reproduced below:

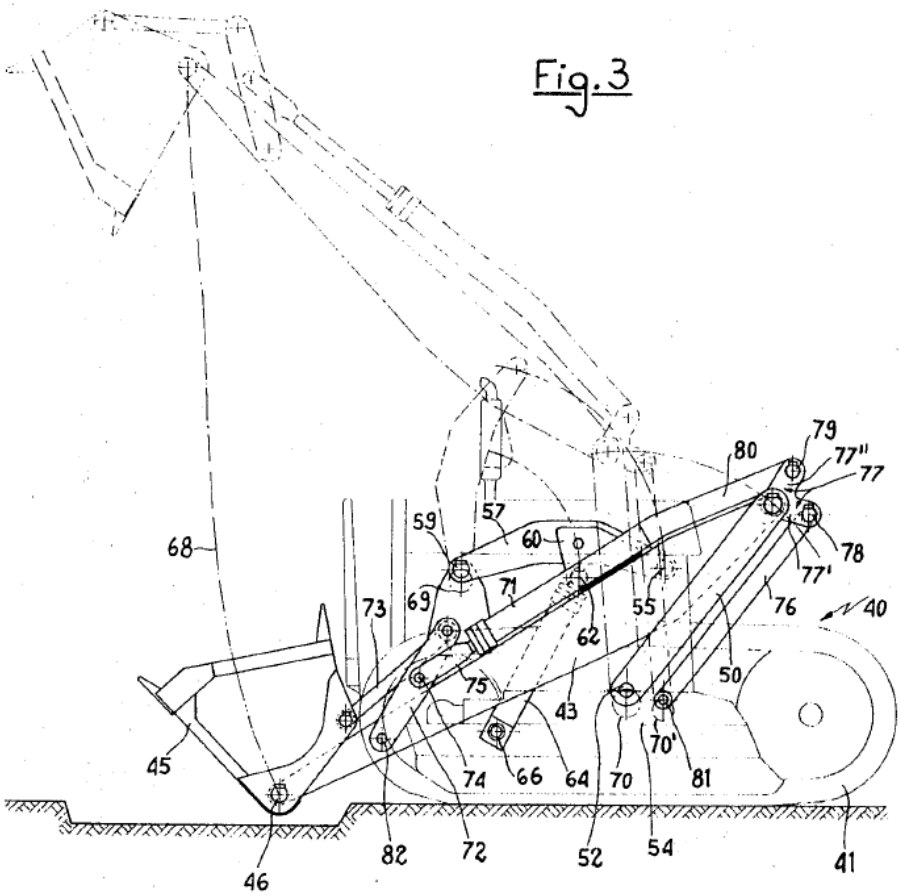

Figure 3 is a side view of a tracked power shovel fitted with a standard bucket. Ex. 1008, 2:28–30. Depicted tractor 40 includes movable tracks 41/42, as well as arms 43/44, which perform digging and lifting motions and are connected to bucket 45 at pivot points 46/47. *Id.* at 4:8–11. Beltrami discloses that the pivot point configuration shown allows the

bucket to travel in a substantially vertical path (reference number 68) from the starting position (shown in dark lines) to the final position (shown in dashed-dotted lines). *Id.* at 4:25–34. Bucket 45 can be tilted through operation of hydraulic jack 71. *See id.* at 4:59–63. According to Beltrami, the invention benefits from the pivot points being "kept in such a low position on the vehicle that no supporting frame is needed . . . and finally a lifting can be performed without having the equipment gravity center to undergo an unnecessarily large shifting." *Id.* at 3:35–41.

2. Independent Claim 15

For independent claim 15, Petitioner contends that the proposed combination of KR996, JP705, and Beltrami discloses each limitation. Pet. 45–57; Pet. Reply 19–26. Patent Owner challenges the articulated reasons to combine KR996, JP705, and Beltrami and argues that the proposed combination would not have resulted in the "vertical distance" limitations. *See* PO Resp. 45–66; PO Sur-reply 22–27. We view this issue as dispositive for this ground.

a) The Reasons to Combine KR996 and JP705 with Beltrami & the Vertical Distance Limitations

For this ground, Petitioner proposes to combine KR996 and JP705 for the same reasons provided for the ground based on those references (i.e., not Beltrami). *See* Pet. 65.

Claim 15 substantially tracks independent claim 1, except for limitations 15.5a and 15.5b. *See, e.g.*, Pet. 68–70 (citing limitations in claim 1 for most limitations in claim 15). In limitation 15.5a, in relevant part, the claim language (1) defines as "D1" the vertical distance from the rotational axis R of the drive mechanism to the bottom of the compact tool

carrier and (2) defines as "D5" the vertical distance from the rotational axis R of the drive mechanism to the bottom of the first side of the mainframe. *See* Ex. 1001, Fig. 2 (showing D1 as defined), Fig. 5 (showing D5 as defined).

Then, in limitation 15.5b, the claim language (1) defines "D2" as the vertical distances separating the rotational axis and the pivot point at which the linkage is attached to the mainframe and (2) defines "D4" as the vertical distances separating the rotational axis and the pivot point at which the actuator is attached to the mainframe. Ex. 1001, Reexam. Cert. C1 2:60–3:5. Limitation 15.5b then requires "both D2 and D4 each being less than 1.5 times D1 and each being less than twice D5." *Id.* at Reexam. Cert. C1 3:3–5. We refer to these limitations as the "vertical distance" limitations.

Petitioner relies on Beltrami to address the "vertical distance" limitations. We turn now to the added reasons to combine KR996/JP705 with Beltrami.

Petitioner first explains why KR996, JP705, and Beltrami are analogous art to the challenged patent. *See* Pet. 65–66. Then, Petitioner discusses how one of ordinary skill in the art "would have been motivated to combine the teachings of Beltrami including locating the pivot point attachment of intermediary parts **low** on the mainframe . . . to produce a predictable and beneficial vehicle configuration." Pet. 66 (citing Velinsky Pet. Decl. ¶¶ 162–166). Petitioner adds that KR996 and Beltrami describe similar loader arm configurations and "Beltrami explains [a] well-known knowledge in vehicle design and four-bar mechanisms generally: the locations of the pivot point connections between each of these intermediate parts and the mainframe are result-affecting variables that can be selected

based on desired performance." *Id.* (citing Ex. 1005, Figs. 8, 9; Ex. 1008, Figs. 2, 3, 6, 4:35–50, 5:62–65). Petitioner contends, therefore, that one of ordinary skill in the art "would have recognized that a design of a vehicle such as KR996's includes determining pivot point locations because it was well-known that pivot point locations are result-affecting design variables for desired performance, as explained by Beltrami." *Id.* at 66–67 (citing Velinsky Pet. Decl. ¶ 162).

Petitioner asserts that,

> In considering the pivot point locations, [one of ordinary skill in the art] would have had reason to further apply Beltrami's teachings of locating the pivot point attachments between the intermediate parts (linkage(s)/actuator) and the mainframe **low** on the mainframe, near the rotational axis such that the distance between the pivot points and the axis is, for example, less than the distance between the axis and the ground/bottom of the mainframe.

Pet. 67 (citing Velinsky Pet. Decl. ¶¶ 163). According to Petitioner, (1) Beltrami describes the benefit of this modification as "decreasing the frame requirements and maintaining a lowering center of gravity" and (2) one of ordinary skill in the art "would recognize that these benefits stem from basic engineering principles." Pet. 67 (citing Ex. 1008, 3:35–41; Velinsky Pet. Decl. ¶ 163). Petitioner adds that the proposed combination is

> merely applying a known technique to a known device (*e.g.*, Beltrami's technique of providing low pivot points in a vehicle using intermediate parts for connecting a loader arm, with KR996's using pivotally attached connections between the loader arm and intermediate parts) ready for improvement (*e.g.*, decreasing the frame requirements and/or lowering the center of gravity) to yield predictable results.

Pet. 67–68 (citing Velinsky Pet. Decl. ¶¶ 151, 181–199). Petitioner also discusses why the proposed combination would have had a reasonable expectation of success. *See* Pet. 67–68 (citing Velinsky Pet. Decl. ¶¶ 164–165).

Among Patent Owner's arguments addressing this ground, Patent Owner asserts that Beltrami would *not* have provided motivation to lower the pivot points on KR996/JP705, as proposed. PO Resp. 45–62; PO Sur-reply 22–27. For the reasons below, the complete record developed at trial supports Patent Owner's positions.

In the discussion summarized above, Petitioner relies on this passage from Beltrami as allegedly describing "the benefits of positioning the location of these pivot points low on the equipment include decreasing the frame requirements and lowering gravity center":

> Amongst the various advantages, the following ones are to be emphasized: the pivot points 24, 26 and 30 can be kept in such a low position on the vehicle that no supporting frame is needed; the arm can be lifted with nearly constant power input and speed; and finally a lifting can be performed without having the equipment gravity center to undergo an unnecessarily large shifting.

Ex. 1008, 3:35–41, *cited at* Pet. 67. Patent Owner responds that one of ordinary skill in the art would not have interpreted the passage at issue as generally discussing the benefits of positioning pivot points low on a compact utility loader, but rather, as discussing the benefits of going from the prior art radial-lift linkage (as shown in Beltrami, Figure 1) to a vertical-lift linkage (as shown in Beltrami, Figure 2), both reproduced below:

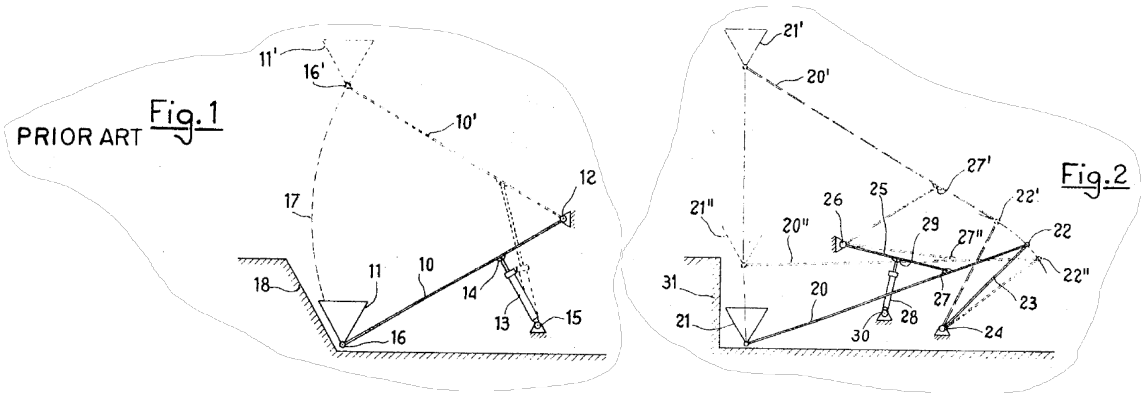

PO Resp. 46–47 (reproducing Ex. 1008, Figs. 1 & 2). Beltrami describes Figure 1 as "diagrammatically show[ing] the conventional means by which the motions of a bucket can be controlled" and describes Figure 2 as "diagrammatically show[ing] the means according to the invention by which the motions of a bucket are controlled." Ex. 1008, 2:24–27. Having considered Beltrami and the evidence of record, including declaration testimony, we agree with Patent Owner's interpretation of the passage at issue, which is a primary basis for Petitioner's reliance on Beltrami.

As noted by Patent Owner, Beltrami leads up to the passage at issue by discussing the benefits of its vertical-lift linkage (in Figure 2) over the "PRIOR ART" radial-lift linkage (in Figure 1). *See* PO Resp. 46–47 (citing Ex. 1008, 2:41–3:45; Fleming Decl. ¶ 99). For example, Beltrami describes a number of drawbacks of the prior art radial-lift designs: (1) inability to create vertical soil walls (known as escarpments), (2) the need to have pivot point 12 (in Figure 1) at an "inconveniently high level in order to allow the bucket 11 to be raised to a sufficient height for a convenient dumping," and (3) the "marked instability of the equipment" due to the "shiftings of the equipment gravity center in respect to a vertical plane." Ex. 1008, 2:41–3:7. Beltrami then discloses that the above drawbacks are wholly prevented or at

least reduced by the vertical-lift linkage, such as the ability to create a soil escarpment "very close to a vertical plane" and the ability to dump material at sufficient height even with a relatively short arm 20. *Id.* at 3:8–3:34.

With that background, we agree with Patent Owner's and Dr. Fleming's interpretation of the passage at issue. *See* Fleming Decl. ¶¶ 99–106; PO Resp. 46–49. First, we agree with Dr. Fleming that one of ordinary skill in the art would have understood the statement that "pivot points 24, 26 and 30 can be kept in such a low position on the vehicle that no supporting frame is needed" (Ex. 1008, 3:36–38) in the passage at issue as highlighting one of the *previously discussed* benefits of vertical-lift linkages over radial-lift linkages—i.e., avoiding "inconveniently high" pivot points and thus unnecessary frame structure for the same dumping height. *See* Fleming Decl. ¶ 102, *discussed at* PO Resp. 47. Thus, the stated benefit—"no supporting frame"—is present *only* in the context of comparing the vertical-lift-linkage configuration to the prior art radial-lift-linkage configuration. Counsel for Petitioner confirmed this at the hearing. Tr. 24:24–25:11 (discussing how "Beltrami is going from a radial lift loader to a vertical lift loader" and how this portion of the passage at issue is referring to how, "in a radial lift machine, you would often have supporting frames to support that higher pivot point, and he's saying it would be kept in the lower. I don't believe it's any more than that"). And, as argued by Patent Owner, the record does not support Dr. Velinsky's understanding of this portion of the passage at issue as teaching decreased frame structure requirements as a *more general* benefit of lowering the pivot points on *any* utility loader. *See* PO Resp. 47–49 (discussing Velinsky Pet. Decl. ¶ 163); Fleming Decl. ¶¶ 101–106 (same).

Second, we agree with Patent Owner and Dr. Fleming that one of ordinary skill in the art would have understood the statement that "lifting can be performed without having the equipment gravity center to undergo an unnecessarily large shifting" (Ex. 1008, 3:39–41) in the passage at issue as again highlighting one of the *previously discussed* benefits of a vertical-lift linkage over radial-lift linkages—i.e., avoiding the "marked instability of the equipment" due to the "shifting of the equipment gravity center *in respect to a vertical plane*" (*id.* at 2:69–75 (emphasis added)). *See* Fleming Decl. ¶¶ 104–106, *discussed at* PO Resp. 48–49. The phrase "in respect to a vertical plane" supports Dr. Fleming's position that one of ordinary skill in the art would have understood the statement in the passage at issue as addressing "the *forward and aft* shifting of the center of gravity that a radial lift machine experiences when it lifts a load" and that load travels in an arcuate path *away from* the center of gravity, thereby posing a tipping risk. Fleming Decl. ¶¶ 104–106; PO Resp. 50.

As noted by Patent Owner and Dr. Fleming, Beltrami discusses how a vertical-lift linkage helps reduce this risk in that the load does not travel in an arcuate path and thereby remains closer in the horizontal direction to the center of gravity. Fleming Decl. ¶ 105, *discussing* Ex. 1008, 5:50–54 ("With the considered grabbing bucket it is particularly important to have a bucket path with a lowermost position very close to [the] tractor and an uppermost position as far as possible therefrom."); PO Resp. 49 ("Beltrami explains that transitioning to a vertical lift path avoids the forward center of gravity shift, thereby decreasing the risk of tipping."). Further, as argued by Patent Owner, the record does not support Dr. Velinsky's understanding of this portion of the passage at issue as allegedly teaching a *lowered* center of

gravity as a *more general* benefit of lowering the pivot points on *any* utility loader. *See* PO Resp. 49–50. Or, as stated succinctly by Dr. Fleming, "Beltrami's discussion of the shifting center of gravity is *forward and aft*, not *up and down* as Dr. Velinsky suggests." Fleming Decl. ¶ 105 (emphasis added); PO Resp. 50 (same).

In the Reply, Petitioner contends that Patent Owner improperly attempts to limit Beltrami to the "specific problem it addresses" rather than allowing the teachings to be "available for all they fairly disclose to" one of ordinary skill in the art. *See* Pet. Reply 20 (citing *In re Kahn*, 441 F.3d 977, 987 (Fed. Cir. 2006); *Cross Med. Prods., Inc. v. Medtronic Sofamor Danek, Inc.*, 424 F.3d 1293, 1323 (Fed. Cir. 2005)). Although a "reference must be considered for everything it teaches by way of technology and is not limited to the particular invention it is describing and attempting to protect" (*Belden Inc. v. Berk-Tek LLC*, 805 F.3d 1064, 1076 (Fed. Cir. 2015)), a reference still must teach or suggest the aspects for which it is relied on. *See* PO Sur-reply 22 (addressing this argument by Petitioner, stating that Petitioner "provides no basis for the Board to conclude that Beltrami 'fairly discloses' moving the pivot points connecting the linkages and actuator *as low as possible* on the mainframe or to positions different than Beltrami discloses"). Here, for the reasons discussed above, one of ordinary skill in the art would *not* have considered Beltrami as *generally* teaching the benefits of lowering pivot points in utility loaders, for which it is relied on by Petitioner. *See, e.g.*, Pet. 66 (stating that one of ordinary skill in the art "would have been motivated to combine the teachings of Beltrami including locating the pivot point attachment of intermediary parts **low** on the mainframe and KR996-JP705 to produce a predictable and beneficial loader configuration" (citing

Velinsky Pet. Decl. ¶¶ 162–166)); *see also* PO Sur-reply 22 ("Beltrami simply does not contain the teachings that [Petitioner] asks the Board to attribute to it. The portion of Beltrami relied on by [Petitioner] (3:35–38) is plainly describing 'the various advantages' over the prior art radial-lift machine depicted in Figure 1.").

For the reasons above, the record supports Patent Owner's and Dr. Fleming's position that—because KR996 *already teaches* a vertical-lift linkage[17]—one of ordinary skill in the art would not have been motivated by the passage at issue to lower the pivot points in KR996/JP705 (as asserted by Petitioner) in that the passage at issue relates to the benefits of a vertical-lift linkage over radial-lift linkages. *See* PO Resp. 50 (citing Fleming Decl. ¶¶ 107–111), 48 ("Because KR996 does not rely on a radial-lift loader arm mechanism and does not, therefore, incorporate an extended supporting frame at an 'inconveniently high level,' Beltrami provides instructions to do away with a structure *that already does not exist on the KR996 device*." (citing Fleming Decl. ¶ 103)). We determine, in light of the complete record, that Petitioner has not shown by a preponderance of the evidence that one of ordinary skill in the art at the time of the invention would have had reason to lower the pivot points in KR996/JP705 based on Beltrami, as proposed.

Moreover, even if Beltrami *did* provide sufficient motivation for locating the pivot point attachment of loader's intermediary parts low on the

---

[17] Petitioner acknowledges that KR996 discloses a vertical-lift linkage. Pet. Reply 19 ("There is no genuine dispute that both Beltrami and KR996, like the '386 patent, disclose vertical-lift loaders utilizing a four-bar mechanism."); *see* Pet. 23 ("KR996's loader is a vertical lift style.").

mainframe of KR996 and JP705's vehicle as proposed, as an additional basis for the outcome as to this ground, we determine that Petitioner has not adequately explained how one of ordinary skill in the art would have arrived at the specific relative requirements in the "vertical distance" limitations recited in limitation 15.5b. *See* PO Sur-reply 27 ("Even if a POSITA was motivated by Beltrami to reconfigure the loader arm mechanism of KR996, Kubota has not demonstrated that this would have yielded a machine having the precise vertical distances required by the claims.").

As an initial matter, Petitioner first relies on "plain inspection" as to the "vertical distance" limitations. Pet. 73–74. But patent drawings not designated as drawn to scale should not generally be relied on for measurements or precise proportions of depicted elements if the specification is silent on the issue. *See Hockerson-Halberstadt, Inc. v. Avia Grp. Int'l, Inc.*, 222 F.3d 951, 956 (Fed. Cir. 2000). And Petitioner acknowledged in its own briefing that patent drawings not to scale should not be relied on for dimensions. *See* Pet. Reply 4, 5, 24, 28.

Petitioner also argues that one of ordinary skill in the art would have arrived at the specific relative requirements in the "vertical distance" limitations based on routine optimization of alleged result-effective variables. *See, e.g.*, Pet. 78 (arguing that one of ordinary skill in the art "would have recognized not only that the location of the pivot points was a result-affecting design choice, but also the desire to make the pivot points relatively low (i.e., minimizing D2 and D4 in the context of KR996) for the benefits discussed above and provide D2 and D4 to each being *less than 1.5 times D1 and each being less than twice D5*"), 66–67 (arguing that one of ordinary skill in the art "would have recognized that a design of a vehicle

such as KR996's includes determining pivot point locations because it was well-known that pivot point locations are result-affecting design variables for desired performance, as explained by Beltrami").

"[W]here the general conditions of a claim are disclosed in the prior art, it is not inventive to discover the optimum or workable ranges by routine experimentation." *In re Aller*, 220 F.2d 454, 456 (CCPA 1955). A given parameter, however, must first be recognized as a result-effective variable (i.e., a variable which achieves a recognized result) before the determination of the optimum ranges of that variable can be characterized as routine experimentation. *In re Antonie*, 559 F.2d 618, 620 (CCPA 1977) ("The PTO and the minority appear to argue that it would always be obvious for one of ordinary skill in the art to try varying every parameter of a system in order to optimize the effectiveness of the system *even if there is no evidence in the record that the prior art recognized that particular parameter affected the result*." (emphasis added)); *In re Applied Materials, Inc.*, 692 F.3d 1289, 1295 (Fed. Cir. 2012) (discussing how the general rule from *In re Aller*, 220 F.2d 454, 456 (CCPA 1955), "is limited to cases in which the optimized variable is a 'result-effective variable[]' *In re Antonie*, 559 F.2d 618, 620 (CCPA 1977)").

The complete record developed at trial does not show that the prior art recognized as result-effective variables *any* of the *specific* ratios of dimensions in required by the "vertical distance" limitations here. Petitioner makes several attempts to address this issue (*see* Pet. 65–78), but we find none sufficient to carry Petitioner's burden.

First, Petitioner states that "the locations of the pivot point connections between each of these intermediate parts and the mainframe are

result-affecting variables that can be selected based on desired performance." Pet. 66 (citing Ex. 1008, 4:35–50, 5:61–65). The cited passages from Beltrami support that *the locations* of the pivot points (in general) dictate the path of the tool or bucket on the loader, but Beltrami does not mention—let alone recognize as result-effective variables—*any* of the recited *ratios of dimensions* in the "vertical distance" limitations.

Second, Petitioner frequently highlights Beltrami's alleged general teachings of the benefits of configuring the pivot point attachment locations low on the vehicle as the basis to arrive at the recited requirements at issue. Pet. 65–78; *see also* Pet. 75–76 (discussing how one of ordinary skill in the art "provide the pivot points low (i.e., minimizing D2 and D4) to provide a compact size mainframe and a low center of gravity as taught by Beltrami by lowering the pivot points and reducing D2 and D4 in the context of KR996 to the extent it is required"), 85–86 (arguing that one of ordinary skill in the art "would have been readily able to modify the vehicle to incorporate Beltrami's teachings to achieve benefits of keeping the pivot points low on the frame of the vehicle as discussed by Dr. Velinsky"), 78 (stating that one of ordinary skill in the art "would have recognized not only that the location of the pivot point was a result-affecting design choice, but also the desire to make the pivot points relatively low (i.e., minimizing D2 and D4 in the context of KR996) for the benefits discussed above and provide D2 and D4 each being *less than 1.5 times D1 and each being less than twice D5*").

As an initial matter, for the reasons discussed above, the complete record does not support Petitioner's view of how one of ordinary skill in the art would have understood the relevant teachings of Beltrami. As also discussed above, Beltrami does not recognize as result-effective variables

any of the recited ratios of dimensions in the "vertical distance" limitations. Moreover, Petitioner has not adequately explained why one of ordinary skill in the art seeking to keep "the pivot points relatively low" (Pet. 78) would necessarily adjust the *specific* ratios of dimensions recited to arrive at the recited ratios of dimensions in the "vertical distance" limitations. *See In re Stepan Co.*, 868 F.3d 1342, 1346 (Fed. Cir. 2017) (reversing a rejection based on routine optimization because the rejection failed to explain why it would have been routine optimization to arrive at the claimed invention).

On this issue, Petitioner also argues that the challenged patent "provides **no** specific advantage, benefit, or surprising result to any one of the myriads of claimed relative dimensions related to these pivot points including those of Claim 15." Pet. 76–77.

In the context of a ground based on discovering the optimum or workable ranges of a result-effective variable, the criticality of a claimed range can be relevant to patentability. *See, e.g.*, *In re Applied Materials, Inc.*, 692 F.3d at 1297 ("The outcome of optimizing a result-effective variable may still be patentable if the claimed ranges are critical and produce a new and unexpected result which is different in kind and not merely in degree from the results of the prior art." (internal quotation marks omitted)). A showing of "criticality," however, comes as one potential rebuttal to a prima facie case of obviousness. *See In re Stepan Co.*, 868 F.3d at 1348. Here, as discussed above, Petitioner has not carried its initial burden of establishing obviousness as to the "vertical distance" limitations based on routine optimization. For this additional reason, even if Beltrami did provide sufficient motivation for the proposed modification, we find, based on the complete record, that Petitioner has not demonstrated by a

preponderance of the evidence that one of ordinary skill in the art would have arrived at the "vertical distance" limitations based on routine optimization of result-effective variables.

b) Conclusion as to Claim 15

For the reasons above, we determine, based on the complete record, that Petitioner has not demonstrated by a preponderance of the evidence that claim 15 would have been obvious based on KR996, JP705, and Beltrami.

3. Dependent Claims 17, 19, 20, 23–30, 66, and 67

For dependent claims 17, 19, 20, 23–30, 66, and 67 (all of which depend from claim 15), Petitioner contends that the proposed combination of KR996, JP705, and Beltrami satisfies each limitation. Pet. 78–90; Pet. Reply 19–26. As discussed in the prior section, Petitioner has not demonstrated by a preponderance of the evidence that independent claim 15, from which claims 17, 19, 20, 23–30, 66, and 67 depend, would have been obvious based on KR996, JP705, and Beltrami. *See* § IV.G.3. Thus, we determine, based on the complete record, that Petitioner has not demonstrated by a preponderance of the evidence that claims 17, 19, 20, 23–30, 66, and 67 would have been obvious based on KR996, JP705, and Beltrami.

V. CONCLUSION

Upon consideration of the briefing and the evidence of record, we determine that Petitioner (1) has proven, by a preponderance of the evidence, that claims 1–13, 21, 22, and 64 would have been obvious based on KR996 and JP705, (2) has proven, by a preponderance of the evidence, that claim 65 would have been obvious based on KR996, JP705, and McIlwraith, and (3)

has not proven, by a preponderance of the evidence, that claims 15, 17, 19, 20, 23–30, 66, and 67 would have been obvious based on KR996, JP705, and Beltrami.[18]

In summary:

Claim(s)	35 U.S.C. §	Reference(s)/Basis	Claim(s) Shown Unpatentable	Claim(s) Not Shown Unpatentable
1–13, 21, 22, 64	103	KR996, JP705	1–13, 21, 22, 64	
65	103	KR996, JP705, McIlwraith	65	
15, 17, 19, 20, 23–30, 66, 67	103	KR996, JP705, Beltrami		15, 17, 19, 20, 23–30, 66, 67
Overall Outcome			1–13, 21, 22, 64, 65	15, 17, 19, 20, 23–30, 66, 67

[18] Should Patent Owner wish to pursue amendment of the challenged claims in a reissue or reexamination proceeding subsequent to the issuance of this decision, we draw Patent Owner's attention to the April 2019 Notice Regarding Options for Amendments by Patent Owner Through Reissue or Reexamination During a Pending AIA Trial Proceeding, 84 Fed. Reg. 16,654 (Apr. 22, 2019). If Patent Owner chooses to file a reissue application or a request for reexamination of the challenged patent, we remind Patent Owner of its continuing obligation to notify the Board of any such related matters in updated mandatory notices. *See* 37 C.F.R. §§ 42.8(a)(3), (b)(2).

VI. ORDER

For the reasons above, it is:

ORDERED that Petitioner has proven, by a preponderance of the evidence, that claims 1–13, 21, 22, 64, and 65 are unpatentable;

FURTHER ORDERED that Petitioner has not proven, by a preponderance of the evidence, that claims 15, 17, 19, 20, 23–30, 66, and 67 are unpatentable;

FURTHER ORDERED that the parties shall file, within 10 days of entry of this Decision, a joint motion to seal this Decision, and shall provide, along with the joint motion, an exhibit with a proposed redacted public version of this Decision;

FURTHER ORDERED that Petitioner's Motion to Exclude is *granted in part*;

FURTHER ORDERED that Patent Owner's Motion to Exclude is *denied*; and

FURTHER ORDERED that, because this is a Final Written Decision, parties to the proceeding seeking judicial review of the decision must comply with the notice and service requirements of 37 C.F.R. § 90.2.

FOR PETITIONER:

David O'Dell
Kelly Lyle
Hong Shi
Greg Michelson
John Emerson
David.odell.ipr@haynesboone.com
Kelly.lyle.ipr@haynesboone.com
Hong.shi.ipr@haynesboone.com
Greg.michelson.ipr@haynesboone.com
Russ.emerson.ipr@haynesboone.com

FOR PATENT OWNER:

Richard Brophy
Marc Vander Tuig
Michael Vander Molen
rbrophy@armstrongteasdale.com
mvandertuig@armstrongteasdale.com
mvandermolen@armstrongteasdale.com
iplitstaff@atllp.com