US007987669B2

(12) **United States Patent**
**Irikura et al.**

(10) **Patent No.: US 7,987,669 B2**
(45) **Date of Patent: Aug. 2, 2011**

(54) **HYDRAULIC STEERING TRANSAXLE AND HYDRAULIC DRIVING VEHICLE**

(75) Inventors: **Koji Irikura**, Hyogo (JP); **Norihiro Ishii**, Hyogo (JP); **Shigenori Sakikawa**, Hyogo (JP)

(73) Assignee: **Kanzaki Kokyukoki Mfg. Co., Ltd**, Hyogo (JP)

( * ) Notice: Subject to any disclaimer, the term of this patent is extended or adjusted under 35 U.S.C. 154(b) by 0 days.

(21) Appl. No.: **12/256,857**

(22) Filed: **Oct. 23, 2008**

(65) **Prior Publication Data**

US 2009/0047151 A1 Feb. 19, 2009

**Related U.S. Application Data**

(60) Continuation of application No. 11/617,278, filed on Dec. 28, 2006, now Pat. No. 7,455,145, which is a division of application No. 10/948,739, filed on Sep. 24, 2004, now Pat. No. 7,204,779.

(30) **Foreign Application Priority Data**

Sep. 26, 2003 (JP) ..... 2003-335606
Oct. 30, 2003 (JP) ..... 2003-370312

(51) **Int. Cl.**
***F16D 31/00*** (2006.01)
*F16D 31/02* (2006.01)

(52) **U.S. Cl.** ..... **60/484**; 60/488; 417/375

(58) **Field of Classification Search** ..... 417/269, 417/271, 375; 180/234, 242; 91/499, 505; 92/146, 148; 60/487, 489, 490, 484
See application file for complete search history.

(56) **References Cited**

U.S. PATENT DOCUMENTS

| | | | | |
|---|---|---|---|---|
| 4,856,368 | A | 8/1989 | Fujisaki et al. | |
| 4,886,142 | A | 12/1989 | Yamaoka et al. | |
| 4,893,524 | A | 1/1990 | Ohashi et al. | |
| 5,465,806 | A | 11/1995 | Higasa et al. | |
| 6,189,641 | B1 | 2/2001 | Azuma | |
| 6,196,348 | B1 * | 3/2001 | Yano et al. | 180/242 |
| 6,237,708 | B1 | 5/2001 | Kawada | |
| 6,401,854 | B2 | 6/2002 | Yano et al. | |
| 6,454,033 | B1 | 9/2002 | Nathan et al. | |
| 6,604,596 | B2 | 8/2003 | Bracke et al. | |
| 6,637,535 | B2 * | 10/2003 | Nemoto | 180/248 |
| 6,668,549 | B2 * | 12/2003 | Yano et al. | 60/433 |
| 6,732,828 | B1 | 5/2004 | Abend et al. | |
| 6,860,354 | B2 * | 3/2005 | Hasegawa | 180/242 |
| 6,926,111 | B1 * | 8/2005 | Irikura | 180/234 |
| 6,932,179 | B2 * | 8/2005 | Sakikawa et al. | 180/242 |
| 2001/0035014 | A1 * | 11/2001 | Yano et al. | 60/490 |
| 2003/0079928 | A1 * | 5/2003 | Hasegawa | 180/248 |

FOREIGN PATENT DOCUMENTS

| | | |
|---|---|---|
| JP | 64-004535 | 1/1989 |
| JP | 2594951 | 12/1996 |
| JP | 2000-001127 | 1/2000 |
| JP | 2002-172946 | 6/2002 |

* cited by examiner

*Primary Examiner* — Charles G Freay
*Assistant Examiner* — Patrick Hamo
(74) *Attorney, Agent, or Firm* — Sterne, Kessler, Goldstein & Fox P.L.L.C.

(57) **ABSTRACT**

A fluid passage member includes a pump mounting surface onto which a hydraulic pump having a rotary axis is mounted; first and second kidney ports opened at the pump mounting surface; a first fluid extraction port outwardly opened and connected to the first kidney port; a motor mounting surface onto which a hydraulic motor having a rotary axis is mounted so that the rotary axis of the hydraulic motor is parallel to the rotary axis of the hydraulic pump; third and fourth kidney ports opened at the motor mounting surface; and a second fluid extraction port outwardly opened and connected to the third kidney port.

**9 Claims, 20 Drawing Sheets**

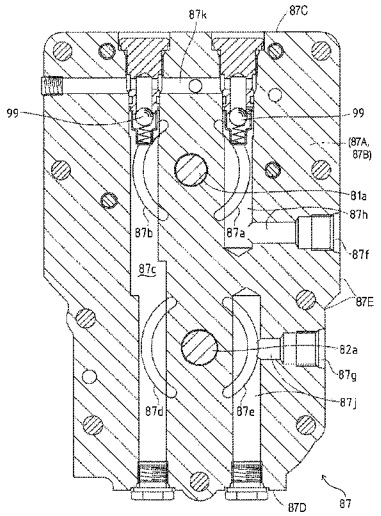

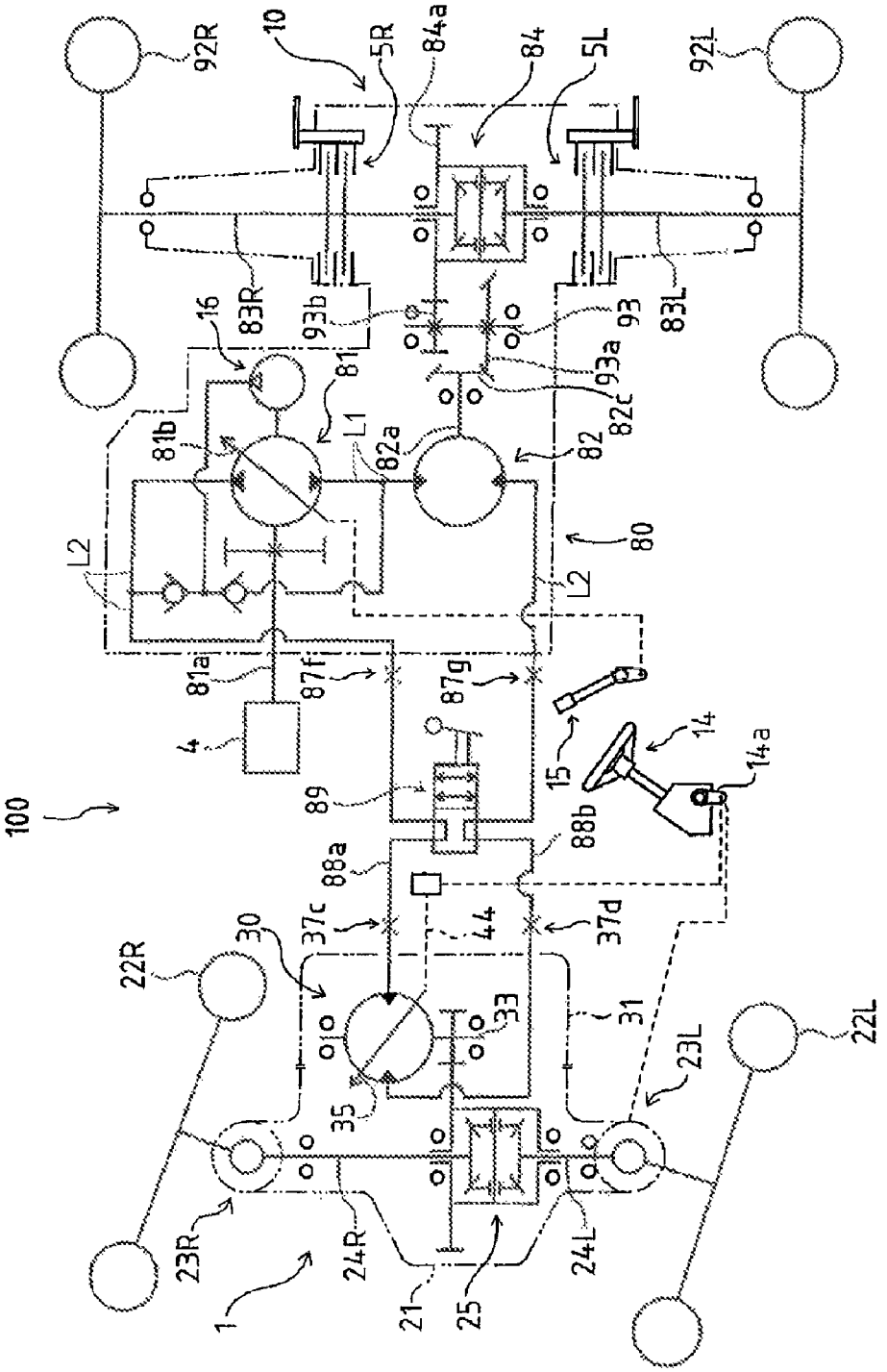
92R
10
5R
84a
84
5L
92L
83R
93b
93
83L
16
81
93a
82c
81b
L1
82a
82
80
L2
L2
81a
87f
87g
4
89
15
14
14a
100
88a
88b
37c
44
37d
30
22R
33
31
22L
35
23L
23R
24R
24L
1
21
25

FIG. 1

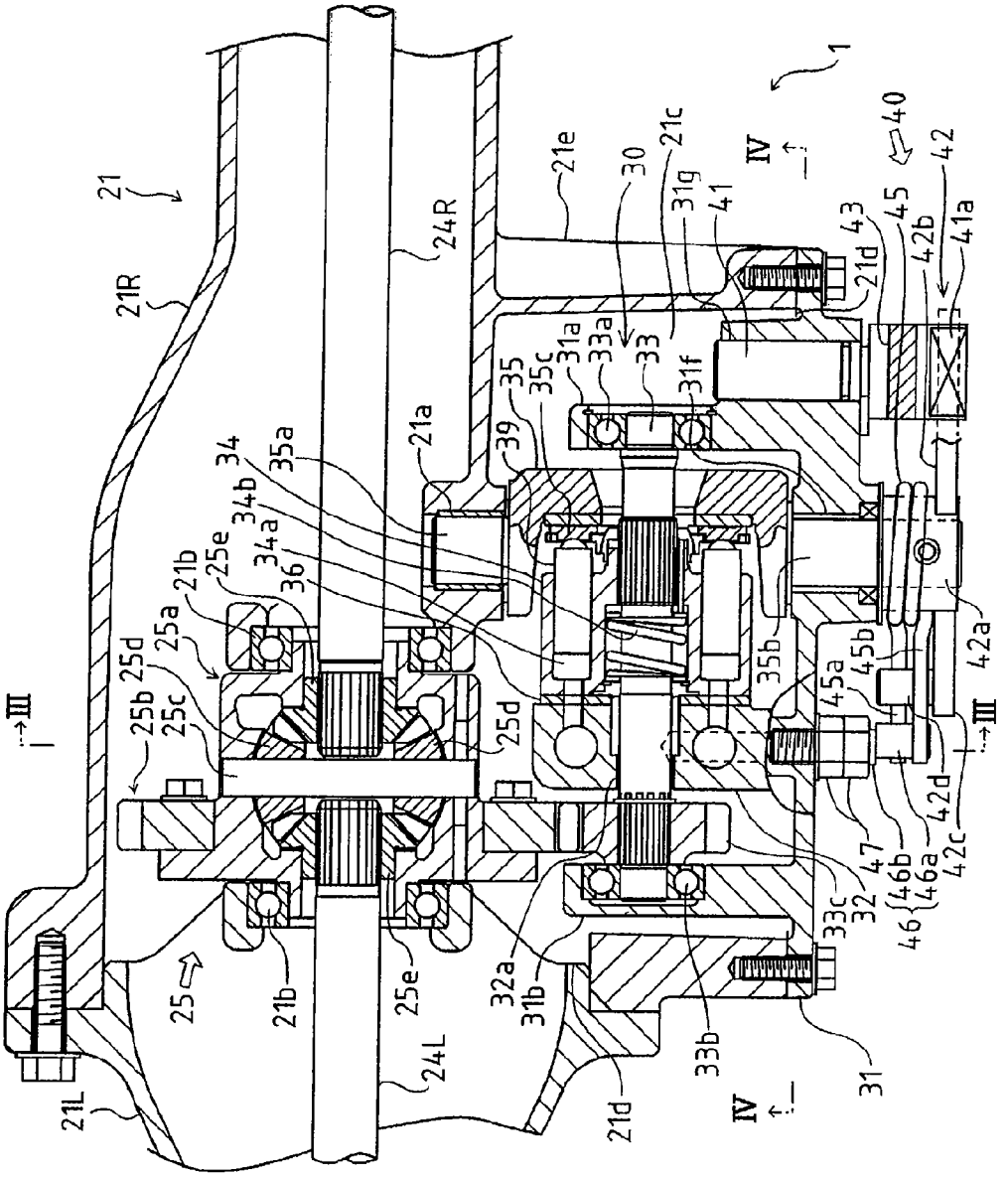
1
21
21R
21L
24R
24L
21a
21b
21c
21d
21e
25
25a
25b
25c
25d
25e
30
31
31a
31b
31f
31g
32
32a
33
33a
33b
33c
34
34a
34b
35
35a
35b
35c
36
39
40
41
41a
42
42a
42b
42c
42d
43
45
45a
45b
46
46a
46b
47
III
IV

FIG. 2

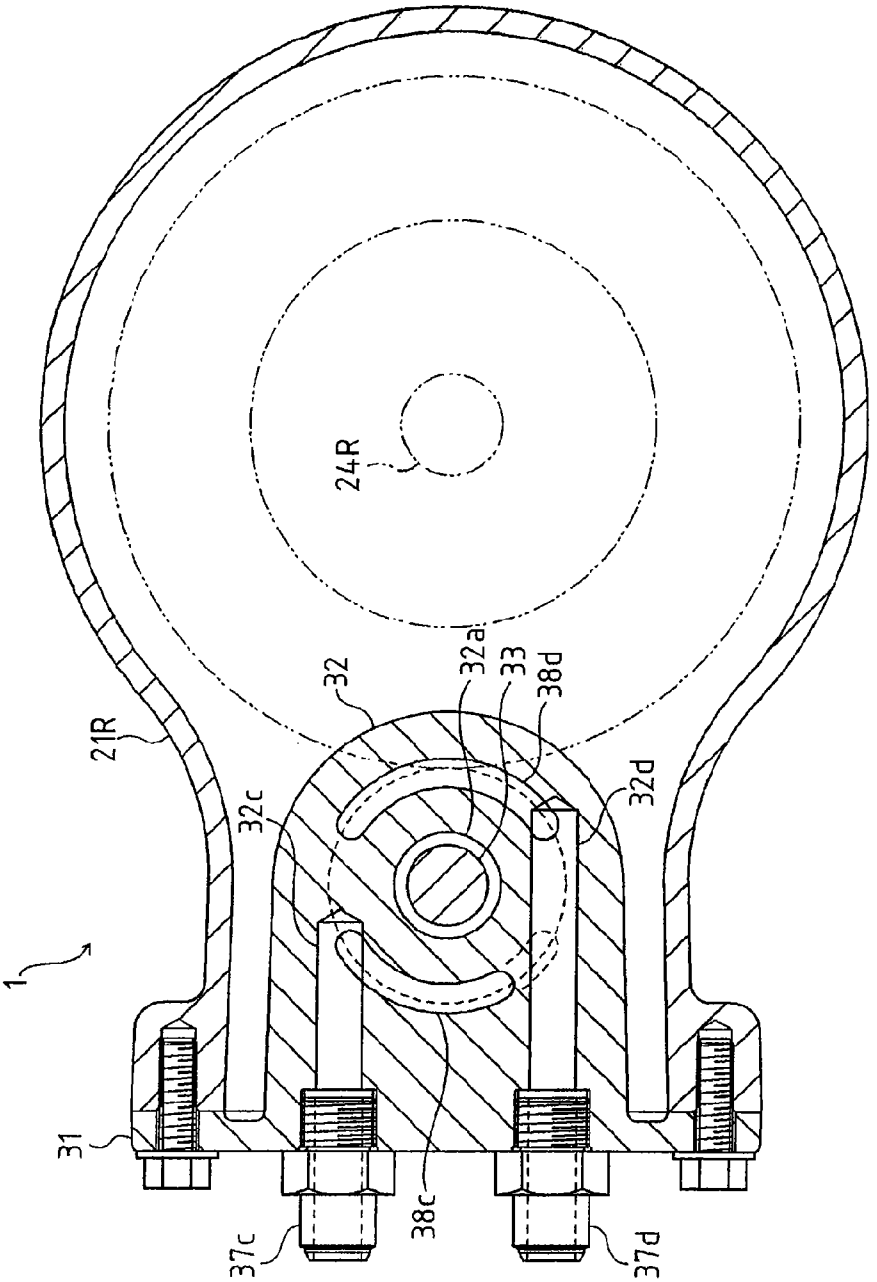


FIG. 3

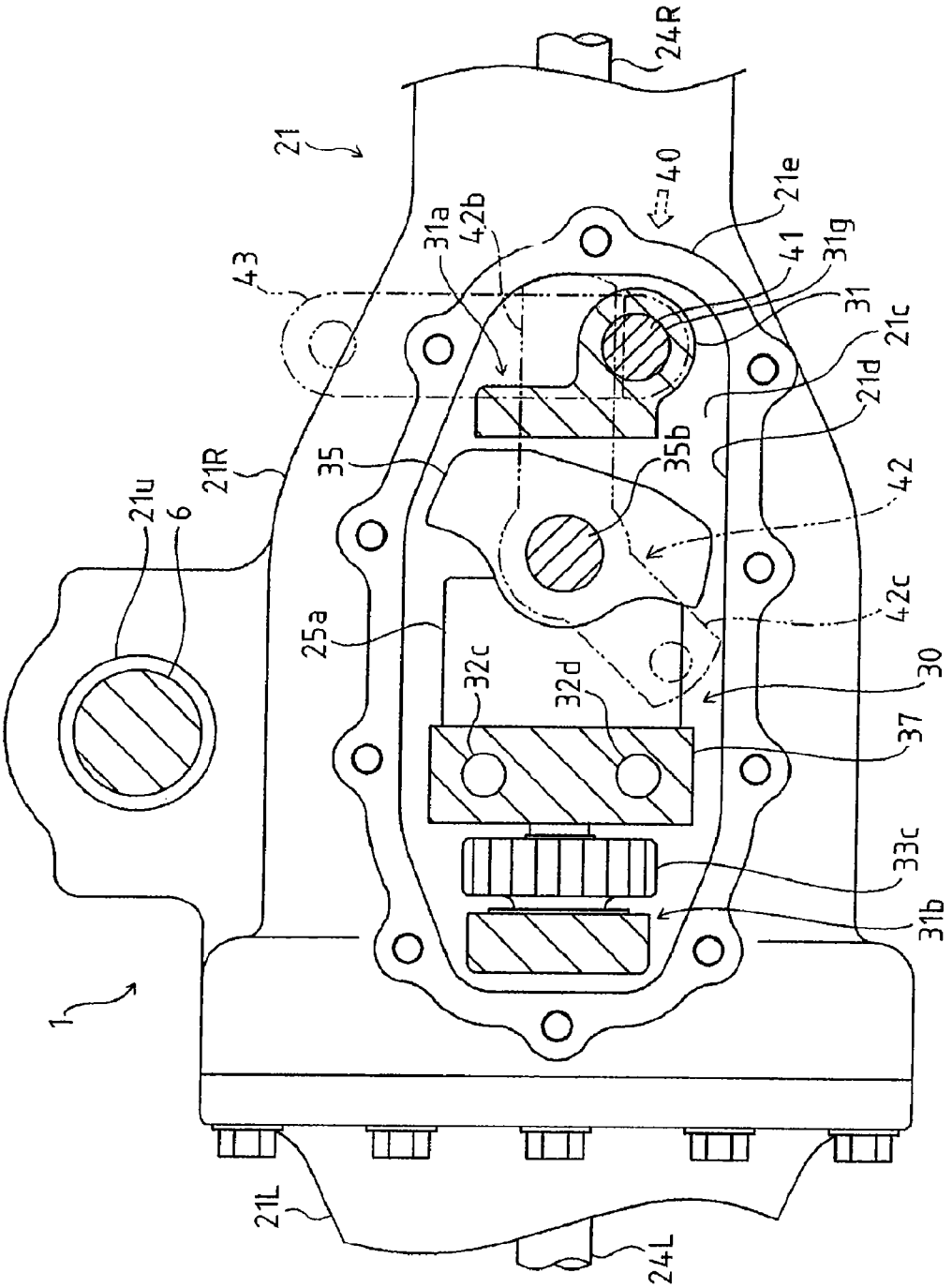
24R
21
40
21e
31a
42b
41
31g
43
31
21c
21d
35b
21R
35
42
21u
6
42c
25a
32c
32d
30
37
33c
31b
1
21L
24L

FIG. 4

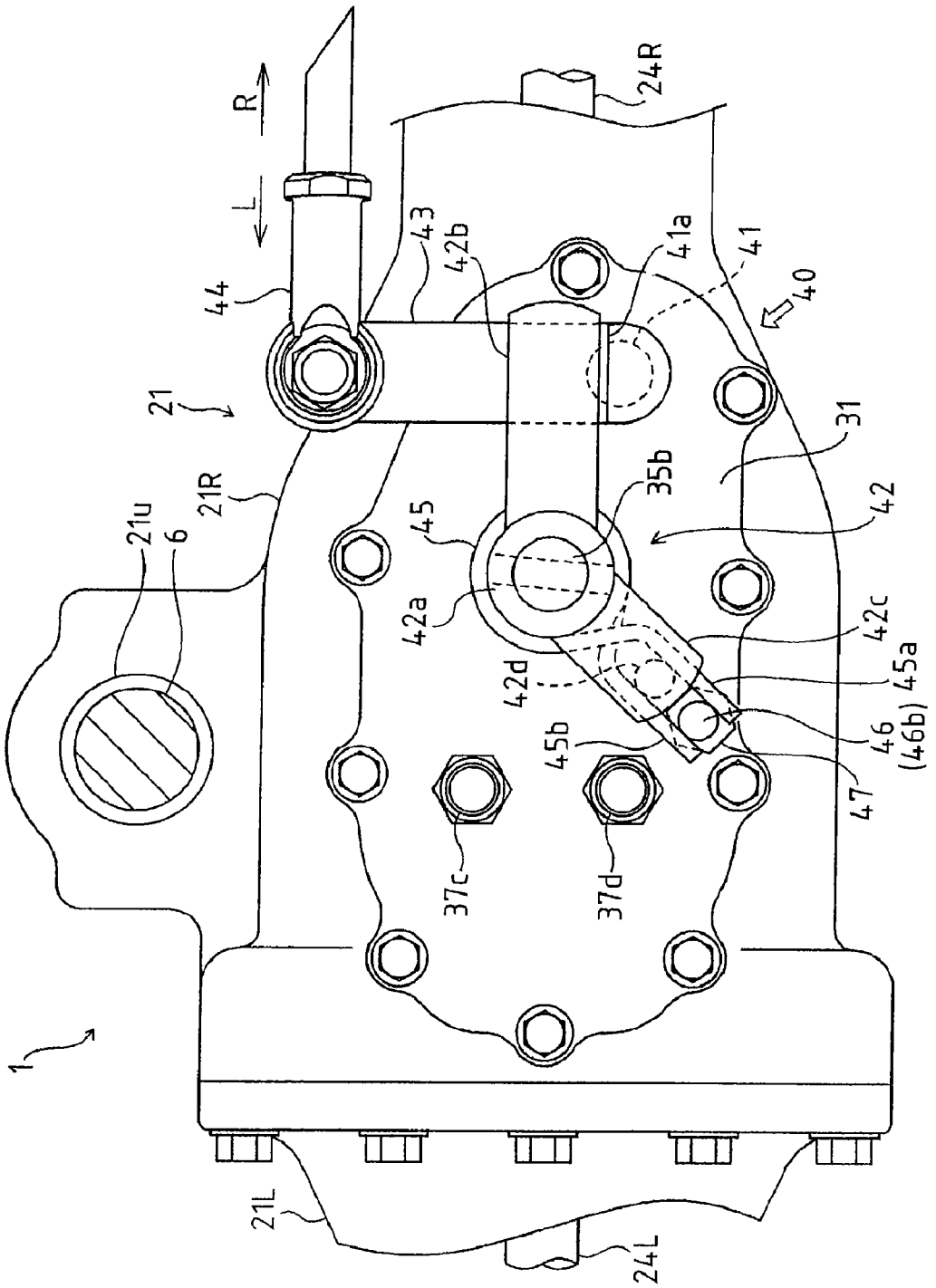
R
L
24R
44
43
42b
41a
41
40
21
21R
21u
6
31
35b
42
45
42a
42c
42d
45a
46
(46b)
45b
47
37c
37d
1
21L
24L

FIG. 5

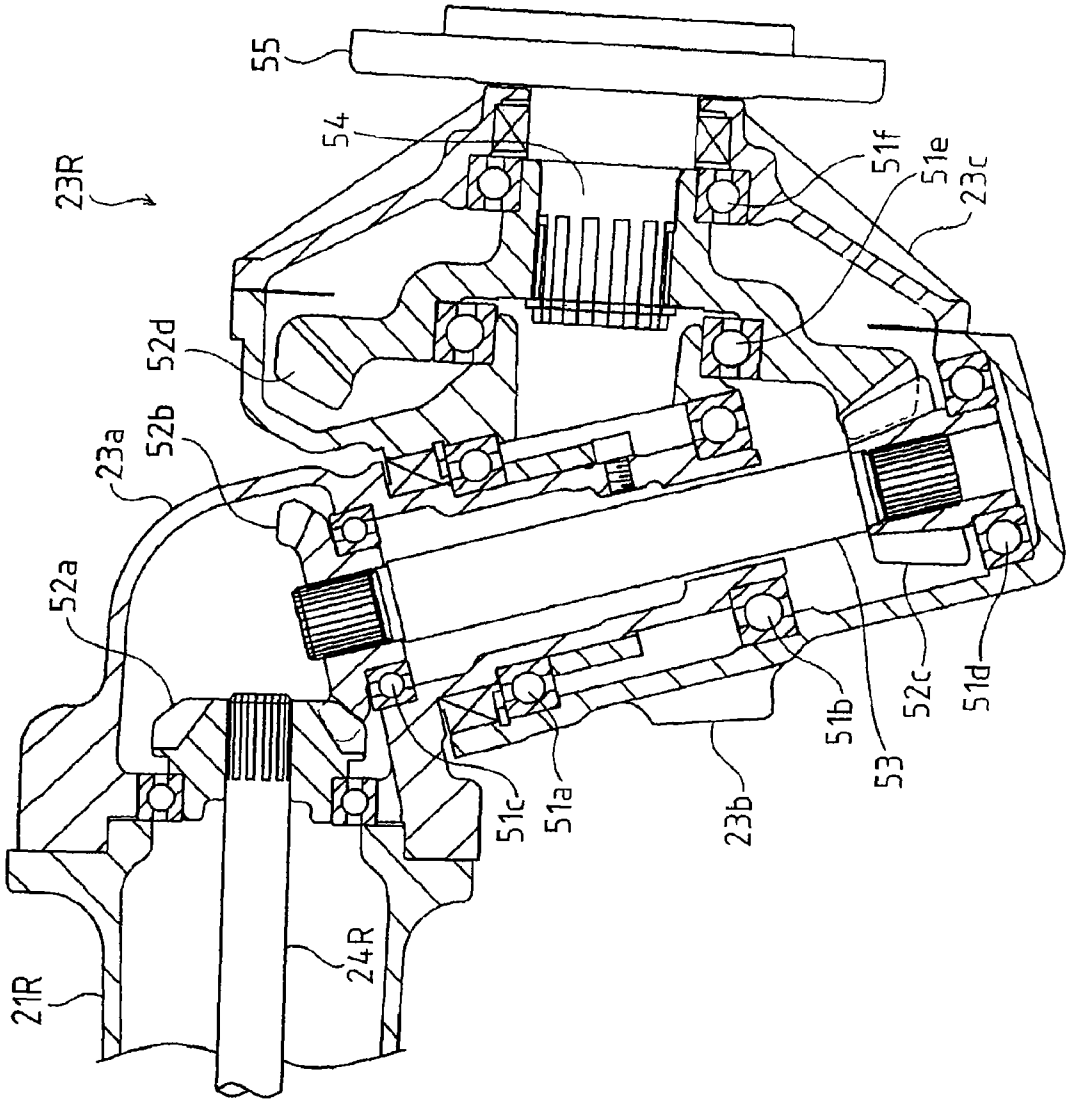
55
54
23R
52d
23a
52b
52a
21R
24R
51c
51a
23b
51b
53
52c
51d
51f
51e
23c

FIG. 6

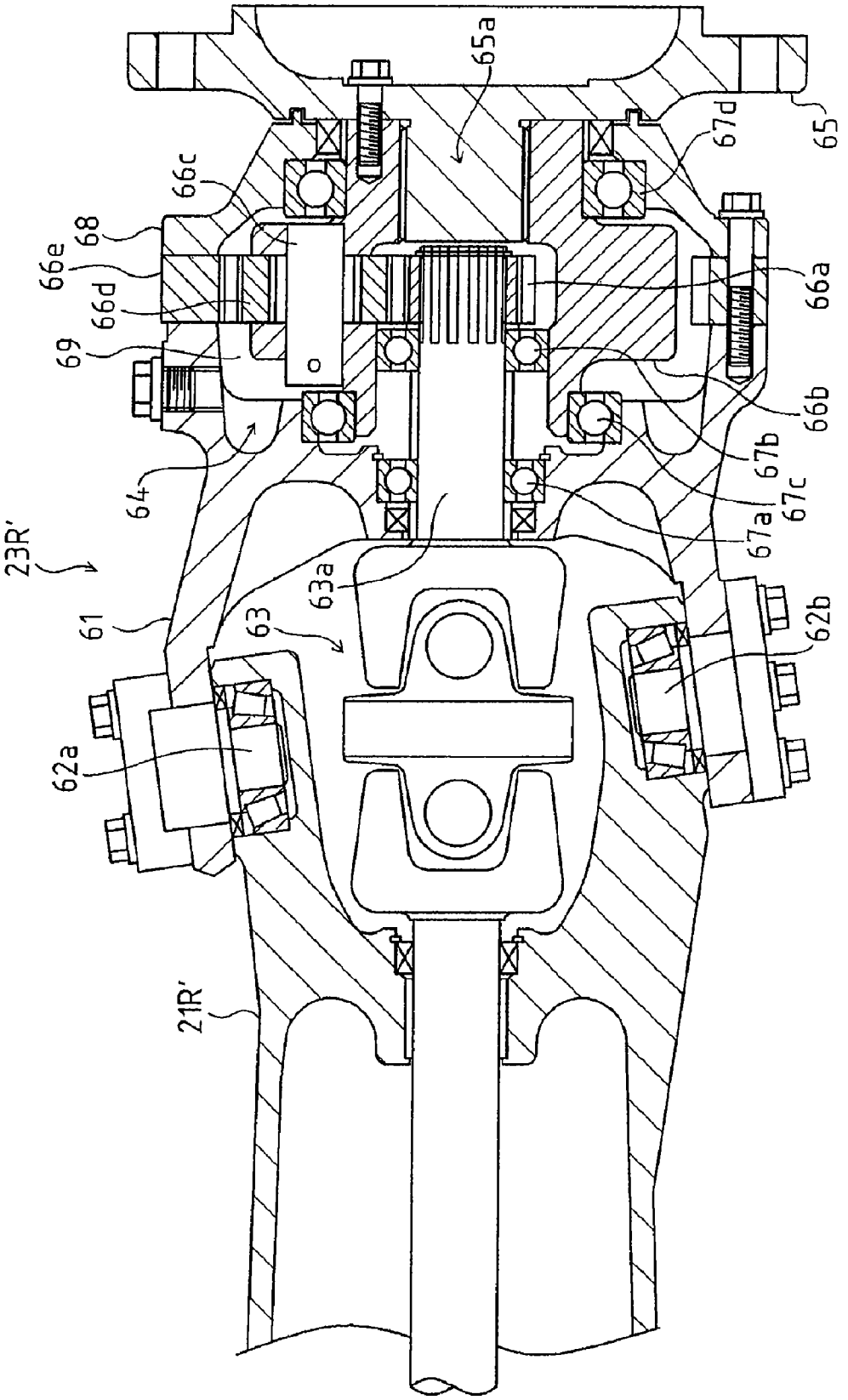
65a
65
67d
66c
68
66e
66d
69
66a
66b
67b
67c
67a
64
23R'
61
63a
63
62b
62a
21R'

FIG. 7

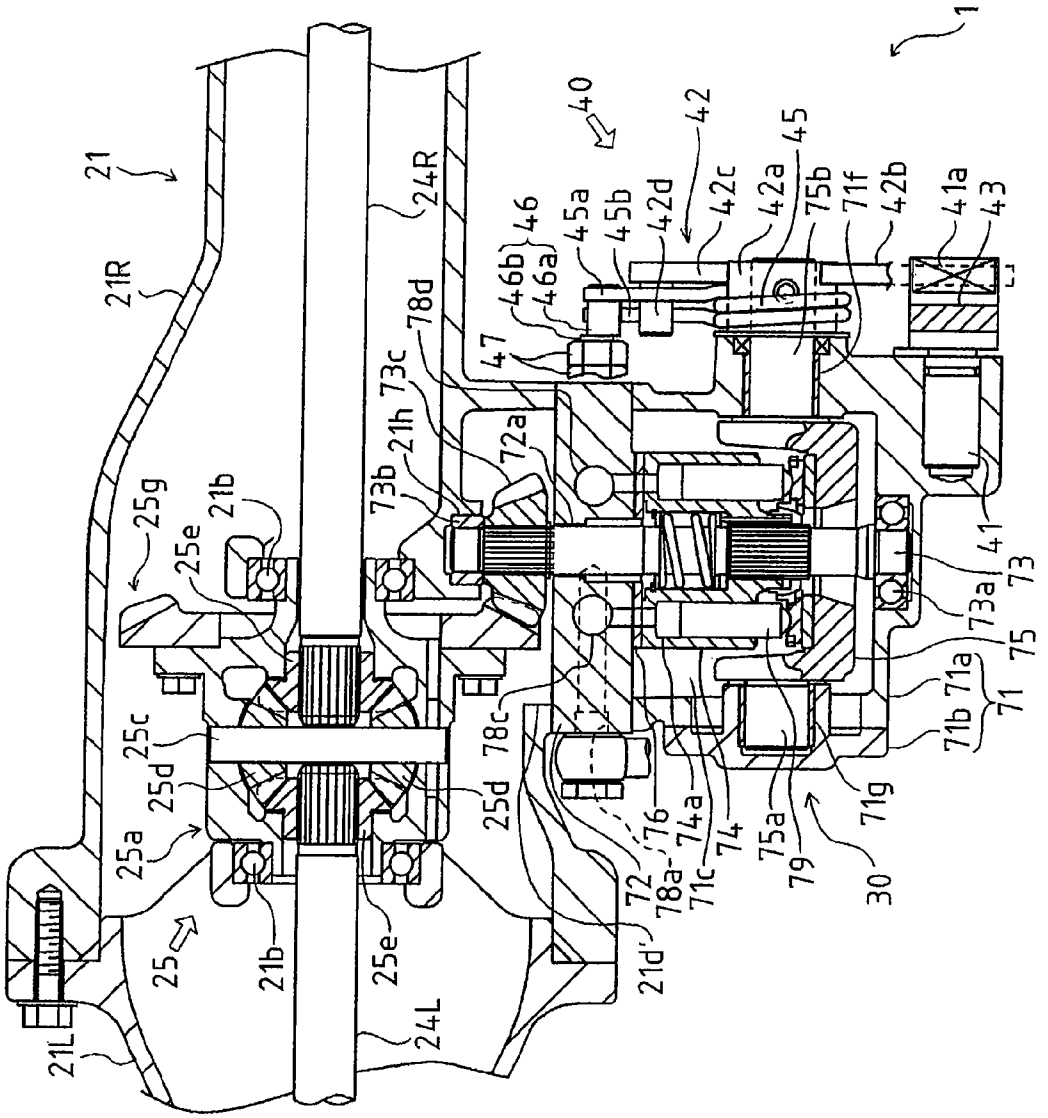
1
40
42
45
21
21R
24R
46
45a
45b
42d
42c
42a
75b
71f
42b
41a
43
46b
46a
78d
47
73c
21h
72a
73b
21b
25g
25e
41
73
73a
75
71a
71
71b
25c
25d
78c
25d
76
74a
74
75a
71g
79
30
25a
72
78a
71c
21d'
25
21b
25e
24L
21L

FIG. 8

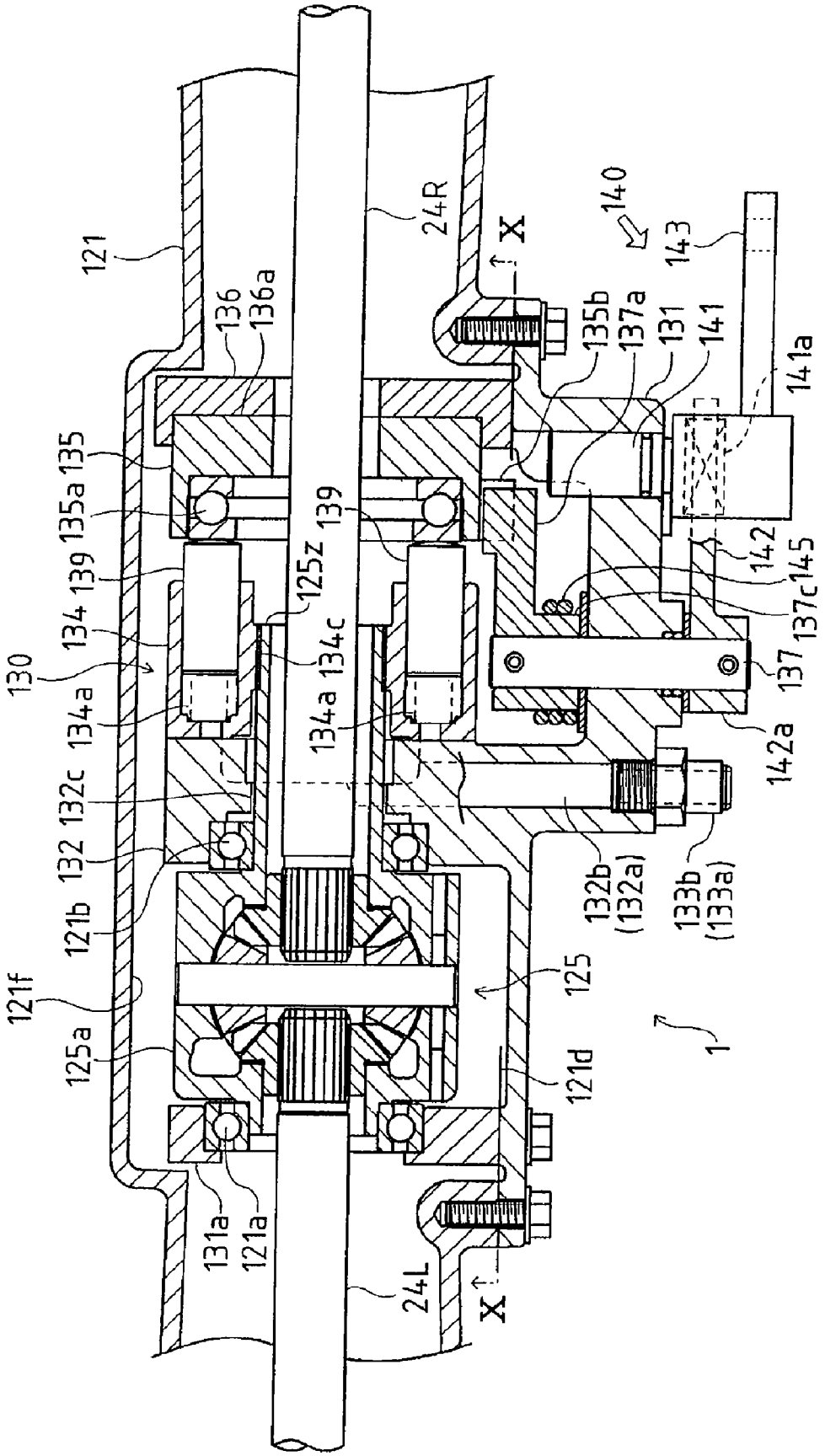
121
136
136a
135
135a
139
134
130
134a
132c
132
121b
121f
125a
131a
121a
24L
X
24R
X
140
143
135b
137a
131
141
141a
139
125z
134c
134a
142
145
137c
137
142a
132b
(132a)
133b
(133a)
125
121d
1

FIG. 9

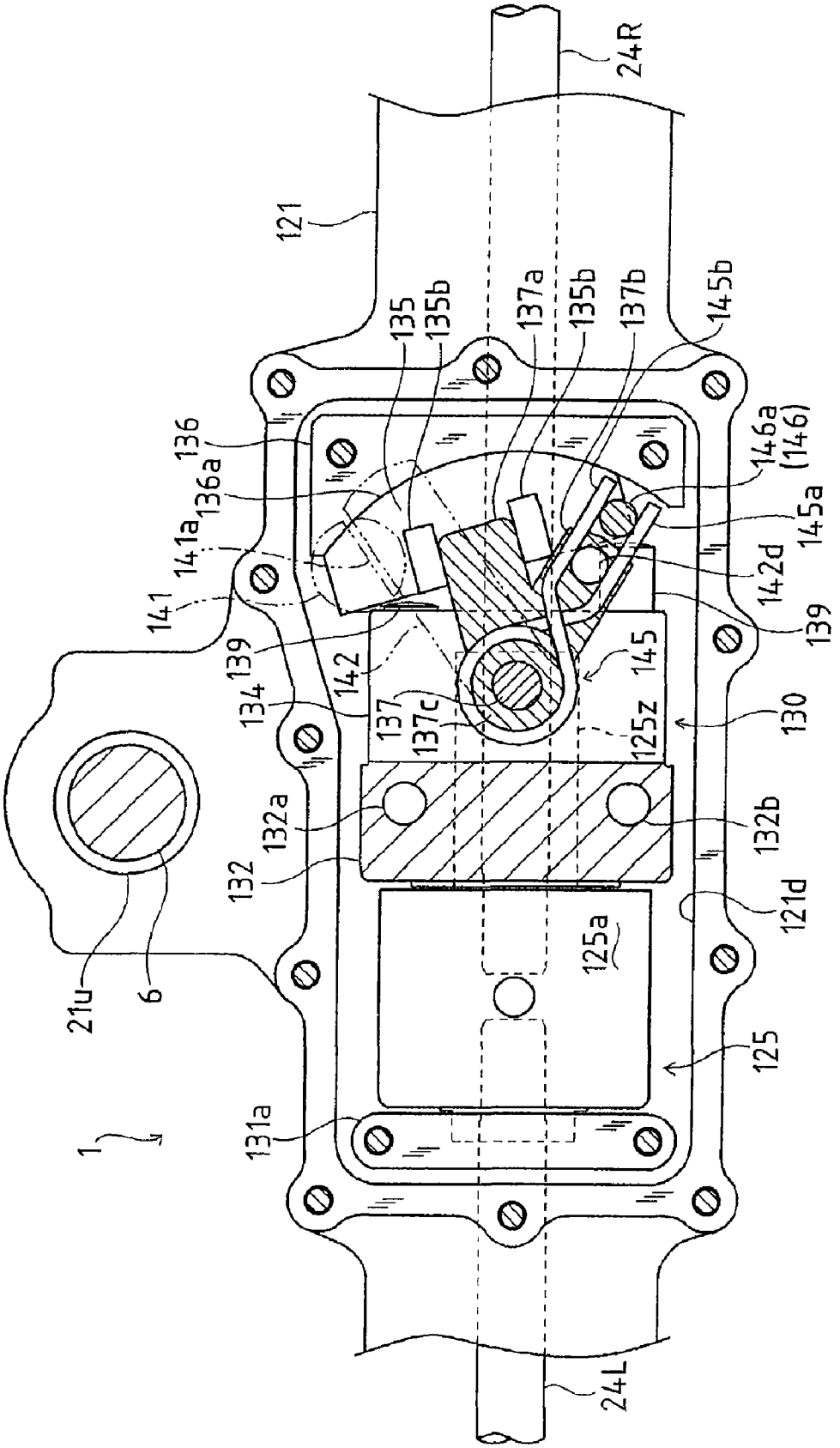
24R
121
135
135b
137a
135b
137b
145b
136
136a
146a
(146)
141a
145a
141
142d
139
139
142
145
134
137
137c
125z
130
132a
132b
132
121d
125a
21u
6
125
1
131a
24L

FIG. 10

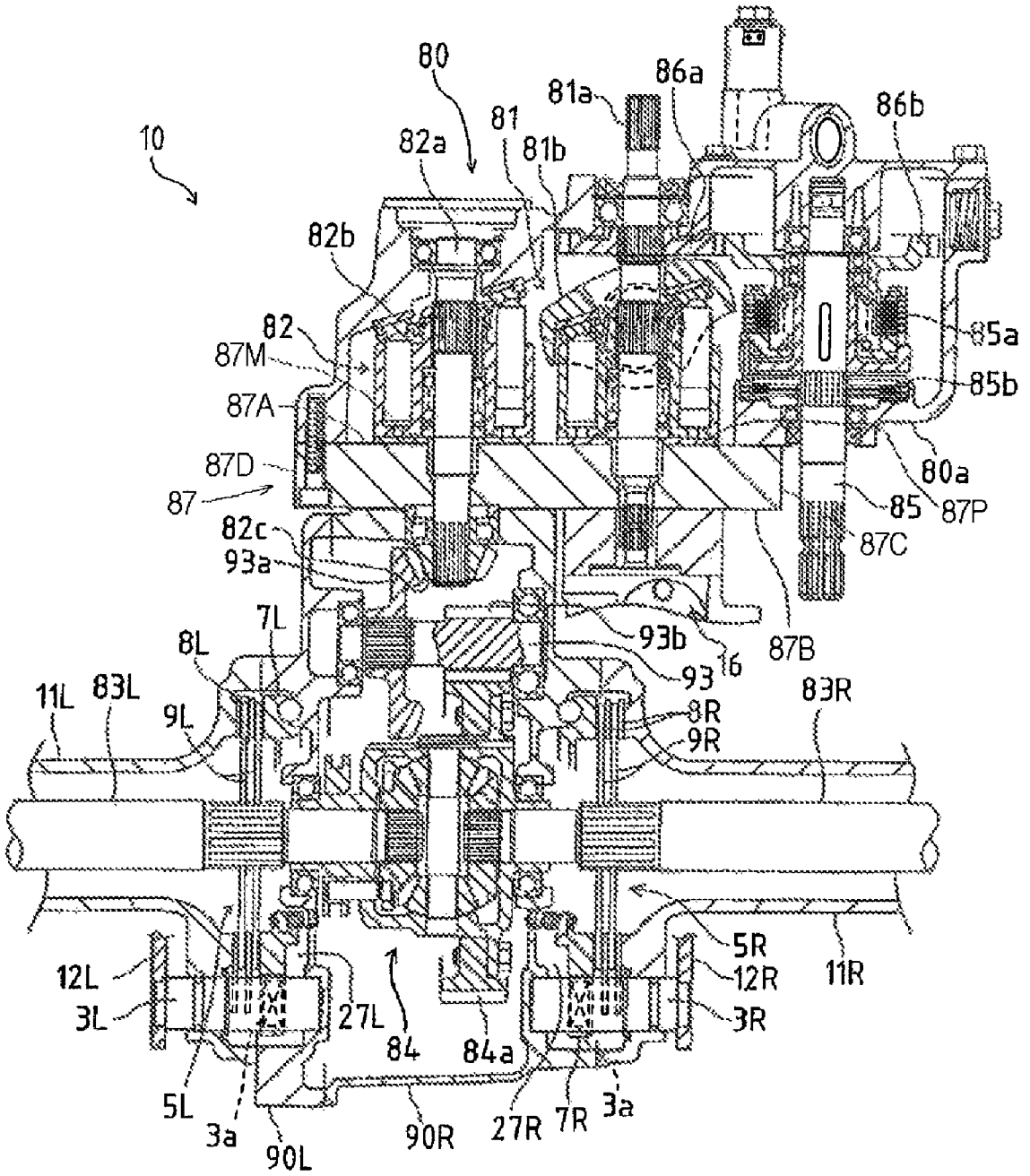
10
80
81a
86a
86b
81
81b
82a
82b
82
87M
87A
87D
87
82c
93a
85a
85b
80a
85
87P
87C
87B
7L
8L
93b
16
93
11L
83L
9L
8R
9R
83R
5R
12R
11R
12L
3L
27L
84
84a
3R
5L
3a
90L
90R
27R
7R
3a

FIG. 11

Fig. 12

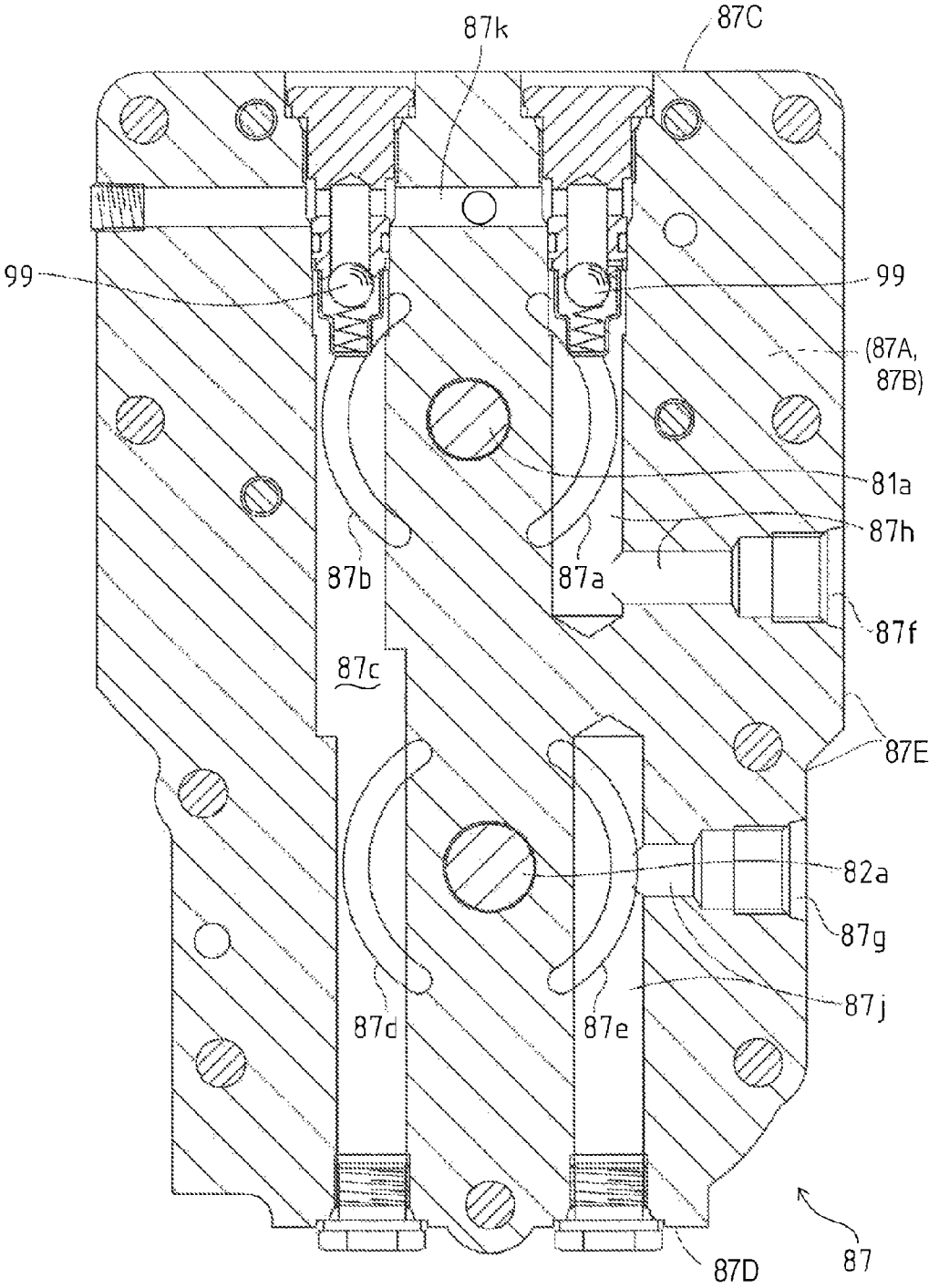
87k
87C
99
99
(87A,
87B)
81a
87h
87b
87a
87f
87c
87E
82a
87g
87j
87d
87e
87D
87

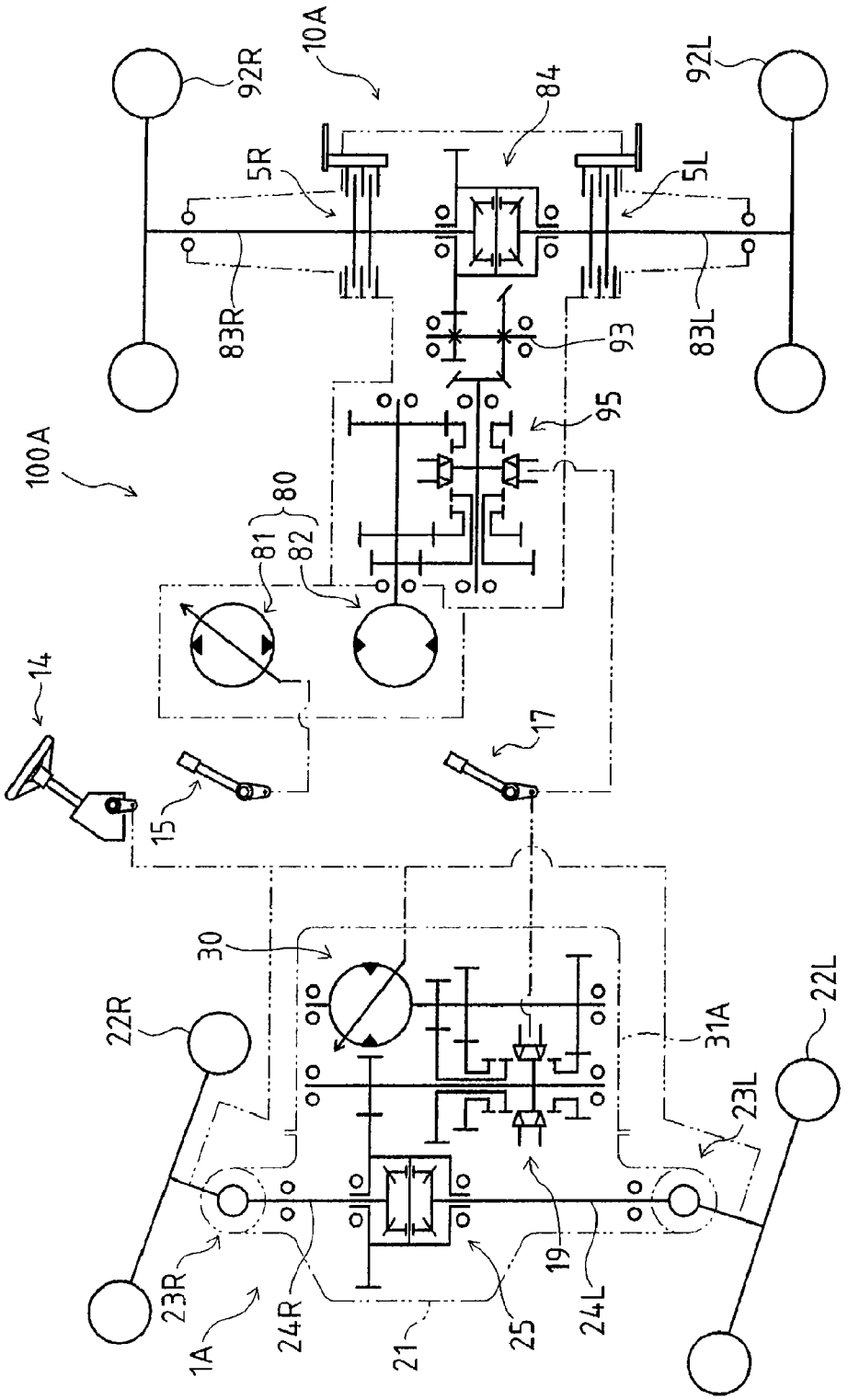
92R
10A
84
92L
5R
5L
83R
83L
93
95
100A
80
81
82
14
15
17
30
22R
22L
31A
23L
23R
1A
24R
21
25
19
24L

FIG. 13

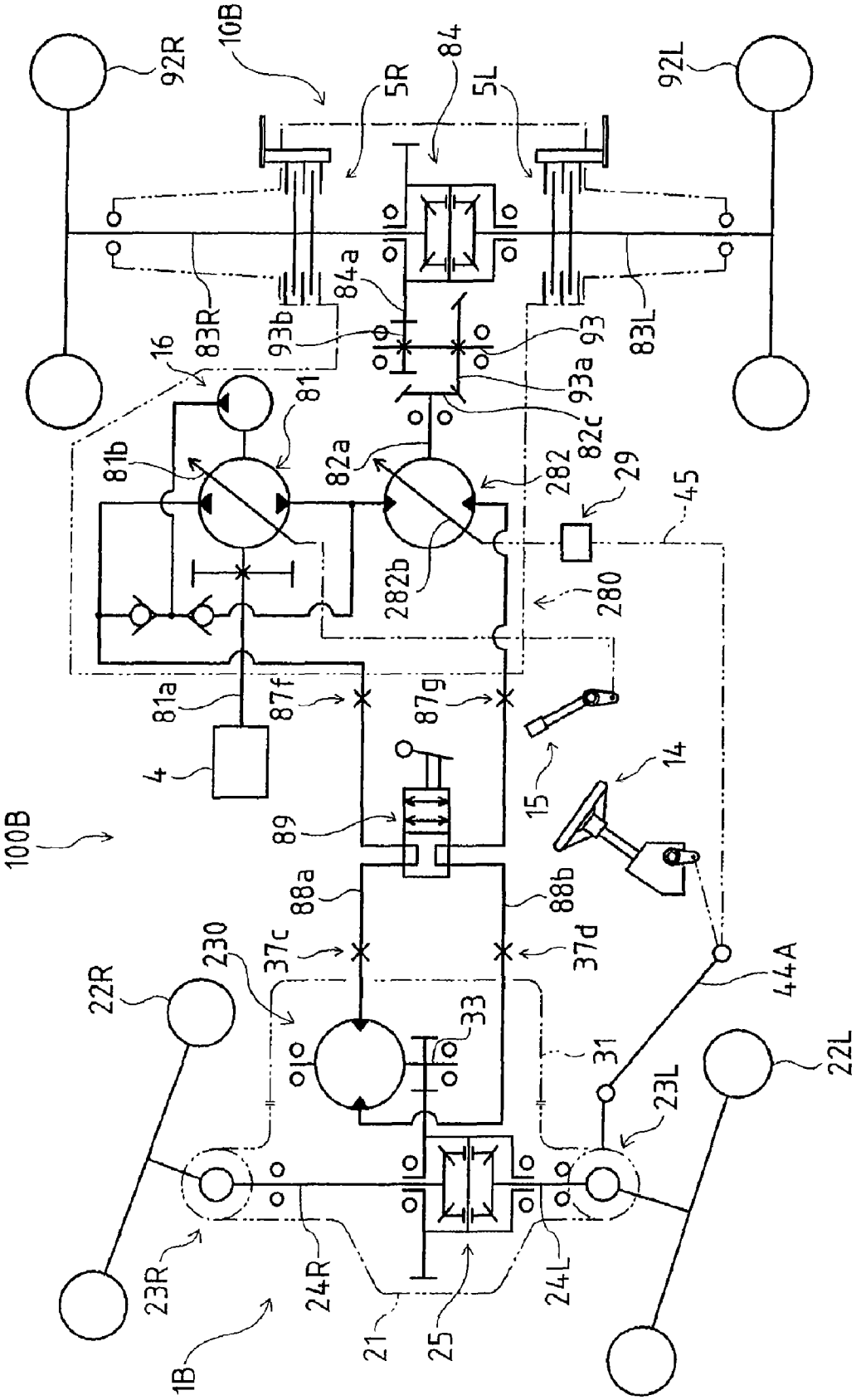
92R
10B
5R
84
5L
92L
84a
83R
93b
93
83L
16
81
93a
82c
81b
82a
282
29
45
282b
280
81a
87f
87g
4
15
14
100B
89
88a
88b
37c
37d
230
22R
33
44A
31
22L
23L
23R
24R
24L
21
25
1B

FIG. 14

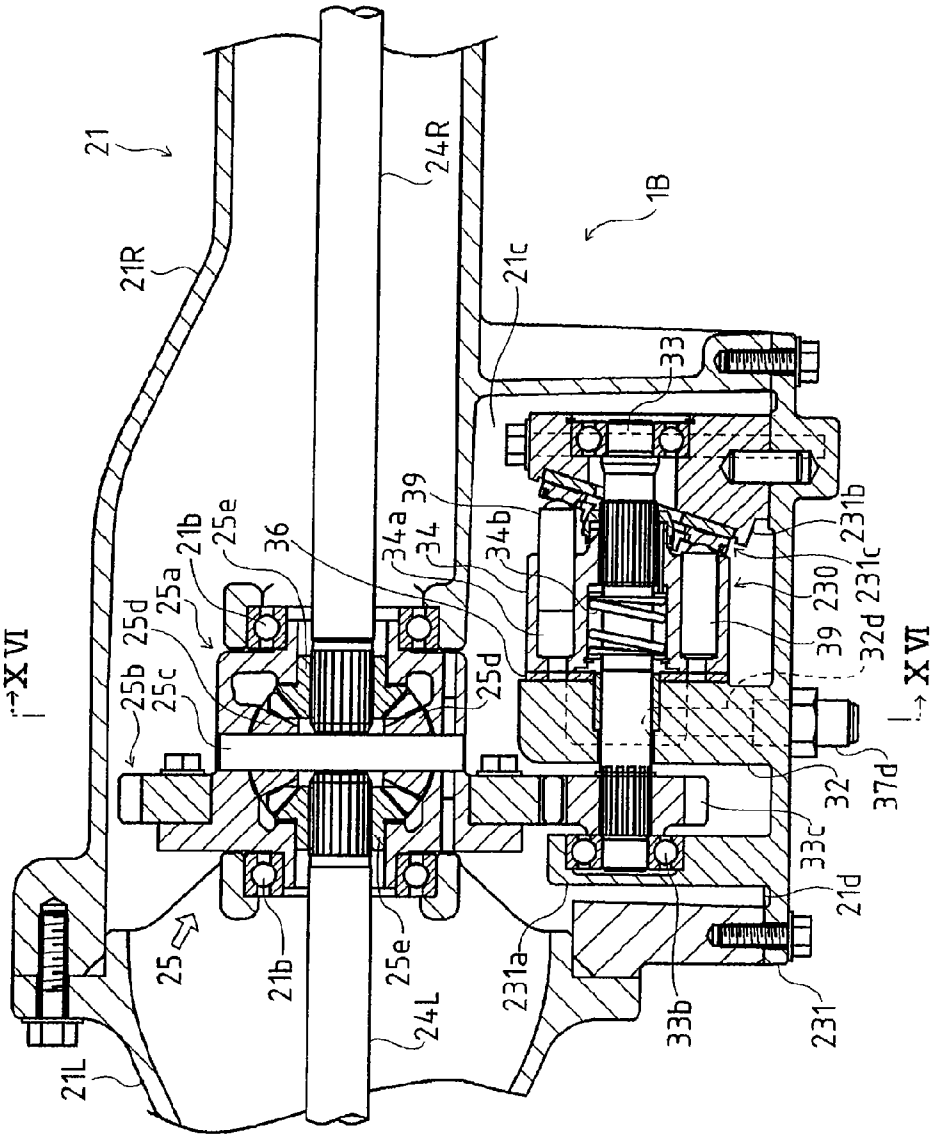
21
21R
24R
1B
21c
33
39
34a
34
34b
36
25e
21b
25a
25d
25b
25c
25d
231b
231c
230
39
32d
XVI
XVI
32
37d
33c
21d
25
21b
25e
24L
231a
33b
231
21L

FIG. 15

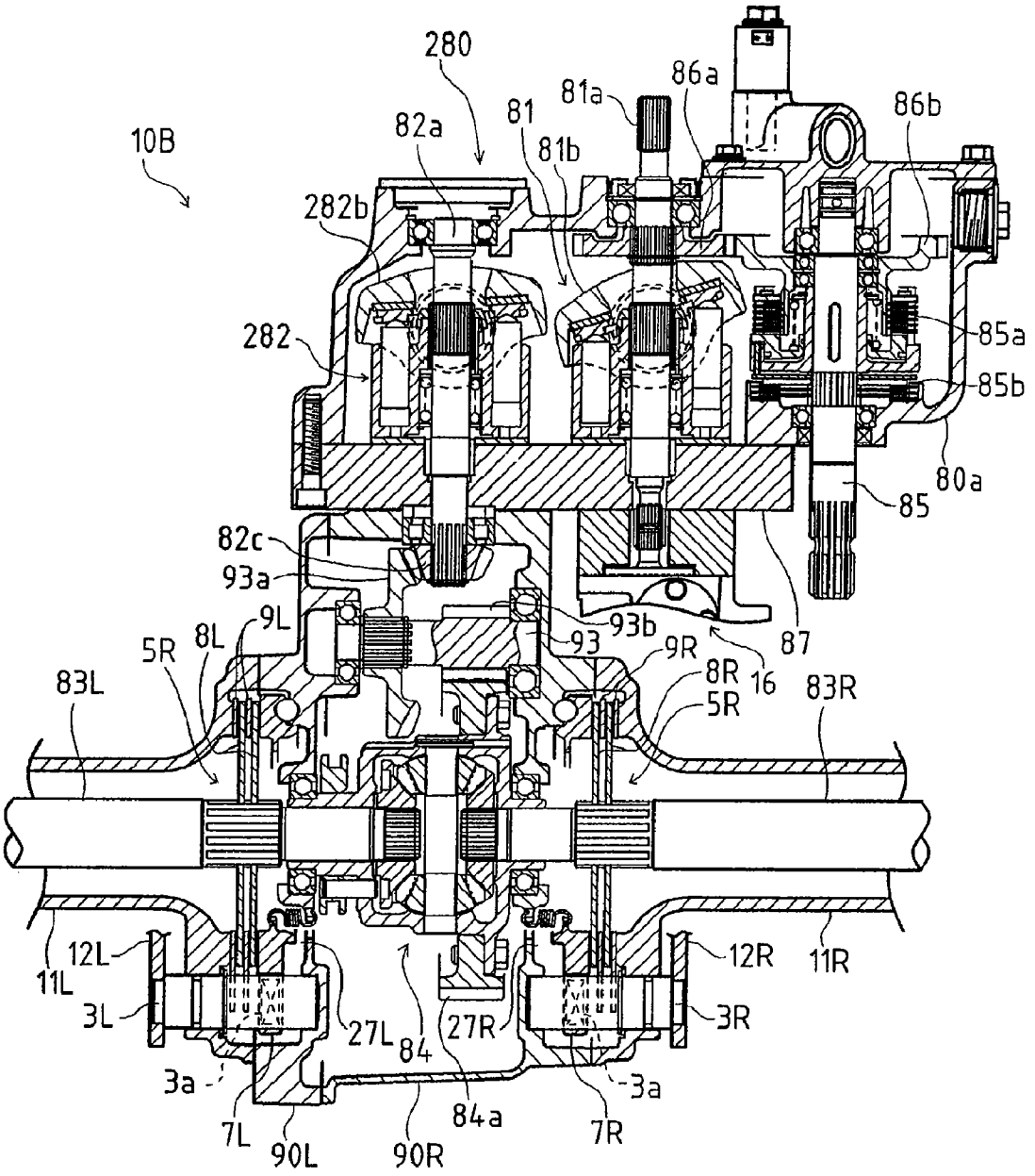
280
10B
82a
81
81a
86a
86b
81b
282b
282
85a
85b
80a
85
82c
93a
93b
93
87
16
9L
8L
5R
83L
9R
8R
5R
83R
12L
11L
3L
27L
84
27R
12R
11R
3R
3a
3a
7L
90L
90R
84a
7R

FIG. 16

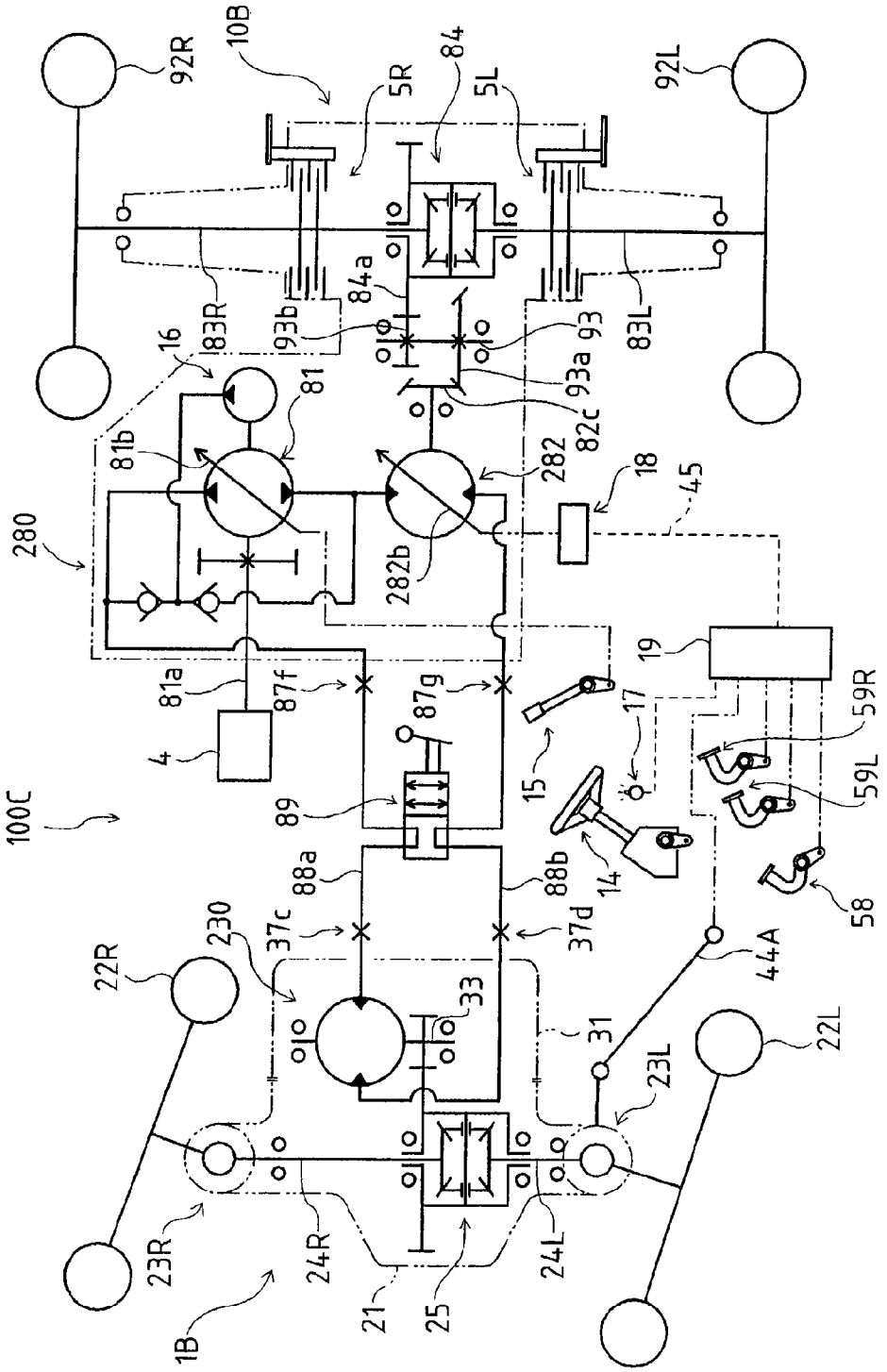
92R
10B
5R
84
5L
92L
84a
83R
93b
93
83L
16
81
93a
82c
81b
282
18
45
280
282b
19
81a
87f
87g
17
59R
4
15
59L
100C
89
14
88a
88b
58
37c
37d
230
44A
22R
33
31
22L
23L
23R
24R
24L
21
25
1B

FIG. 17

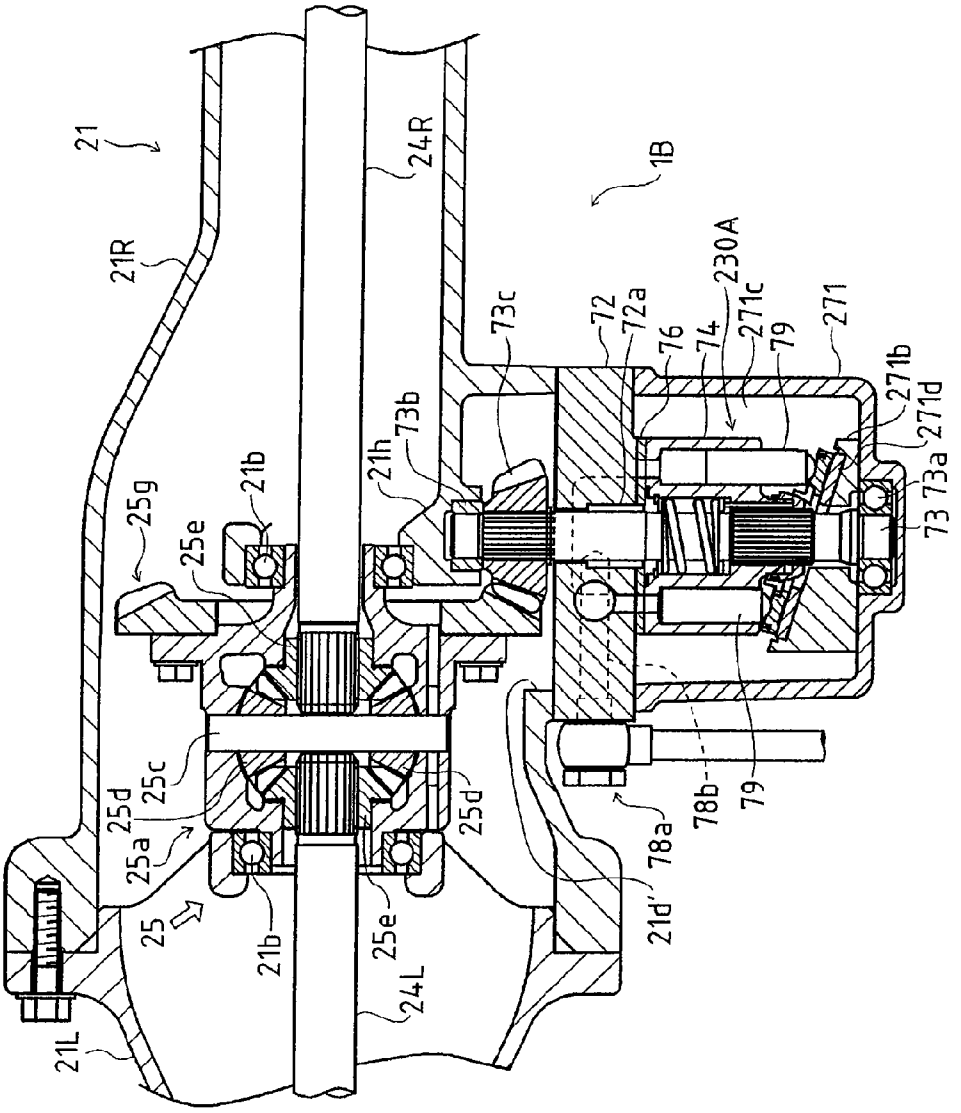
21
21R
24R
1B
230A
73c
72
72a
76
74
271c
79
271
271b
271d
73b
21h
21b
25g
25e
73a
73
25c
25d
25a
25
21b
25e
24L
21L
21d'
78a
78b
79

FIG. 18

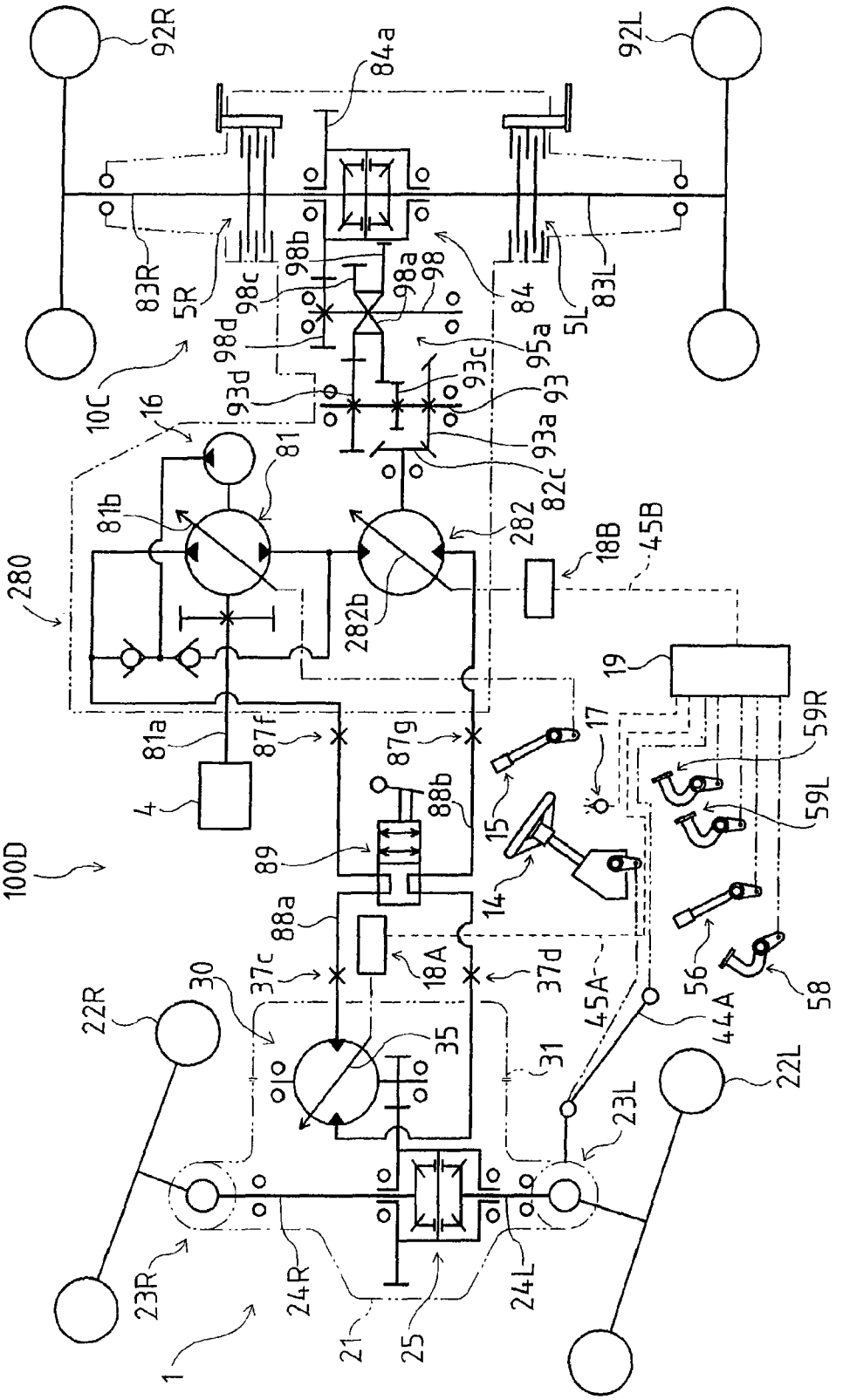
92R
92L
84a
83R
5R
98b
98c
98a
98
84
83L
5L
98d
95a
10C
93d
93c
93
16
93a
81
82c
81b
282
18B
45B
280
282b
19
81a
87f
87g
17
59R
4
88b
15
59L
100D
89
14
88a
18A
37c
37d
45A
56
58
22R
30
35
31
44A
22L
23L
23R
24R
24L
21
25
1

FIG. 19

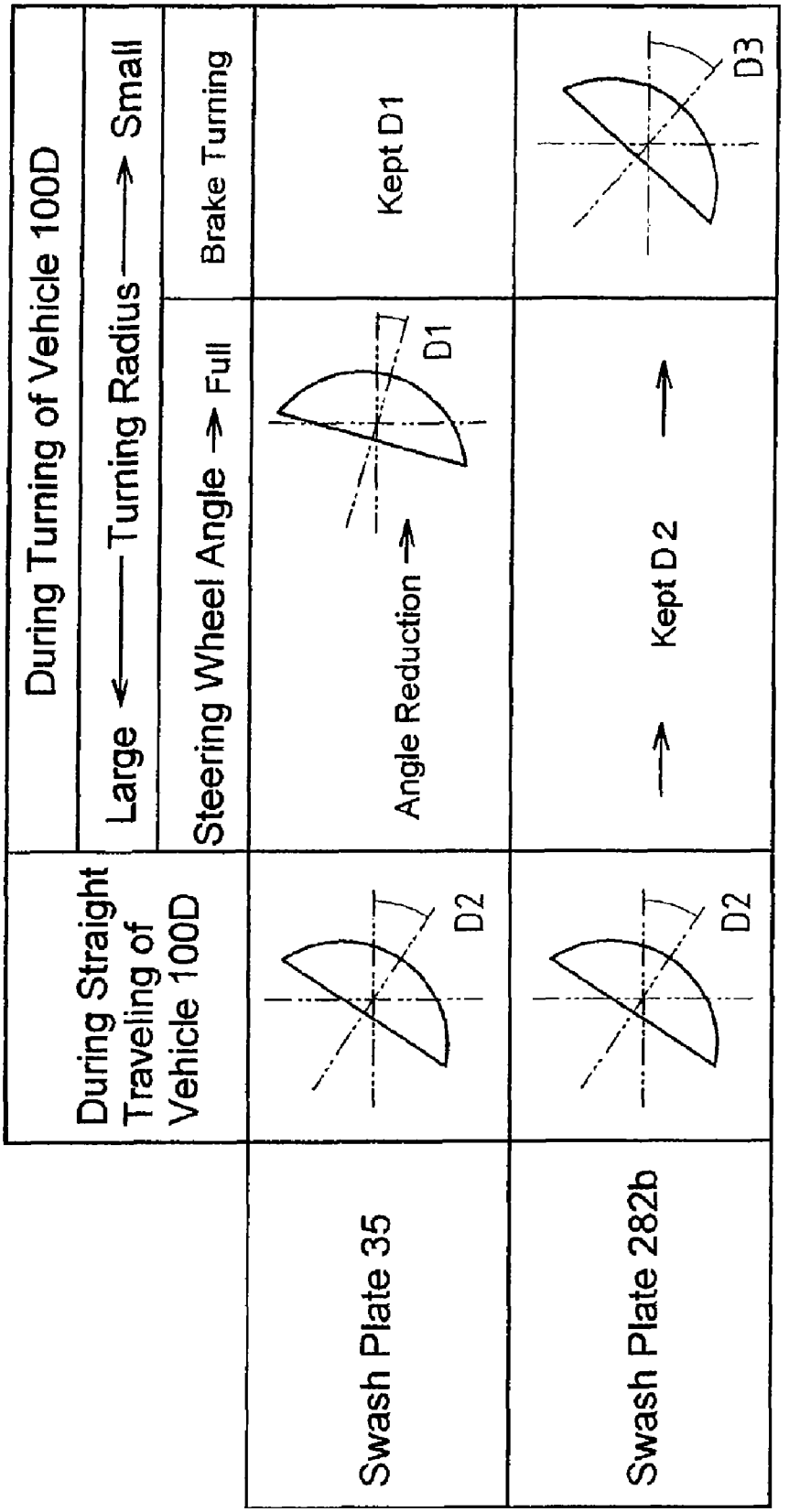
During Turning of Vehicle 100D
During Straight Traveling of Vehicle 100D
Large ← Turning Radius → Small
Steering Wheel Angle → Full
Brake Turning
Swash Plate 35
D2
Angle Reduction →
D1
Kept D1
Swash Plate 282b
D2
→
Kept D2
→
D3

FIG. 20

# HYDRAULIC STEERING TRANSAXLE AND HYDRAULIC DRIVING VEHICLE

## CROSS-REFERENCE TO RELATED APPLICATIONS

This application is a continuation of U.S. application Ser. No. 11/617,278, filed Dec. 28, 2006, which is a divisional of U.S. application Ser. No. 10/948,739, filed Sep. 24, 2004, now U.S. Pat. No. 7,204,779, issued Apr. 17, 2007, the entire disclosures of which are incorporated herein by reference thereto.

## BACKGROUND OF THE INVENTION

1. Field of the Invention

The invention relates to a steering transaxle having a hydraulic motor for driving steerable wheels. The invention also relates to a hydraulic driving vehicle, especially a four-wheel driving vehicle, e.g., an agricultural tractor, a riding mower and a construction machine, comprising the steering transaxle.

2. Related Art

As disclosed in the Japanese Patent No. 2594951 (document '951) and the Japanese Laid Open Gazettes Nos. 2002-172946 (document '946) and 2000-1127 (document '127), there are conventional well-known four-wheel driving vehicles, each of which has a front steering transaxle and a rear unsteering transaxle. The front steering transaxle supports steerable front wheels and incorporating a front differential gear unit mutually differentially connecting the front wheels, and the rear unsteering transaxle supports unsteerable rear wheels and incorporating a rear differential gear unit mutually differentially connecting the rear wheels, wherein the speed ratio between the steerable wheels and the unsteerable wheels is changed according to the steered angle of the steerable wheels.

The vehicle disclosed in the document '946 is provided with a large and complicated mechanical (planetary gearing) center differential gear unit interposed between the front steering transaxle and the rear unsteering transaxle. A large middle space of the vehicle is necessary for arranging the center differential gear unit, and two front and rear propeller shafts for transmitting power of the center differential gear unit to the respective front and rear transaxles, thereby causing designing limitation.

With respect to the conventional hydraulic driving vehicles disclosed in the documents '951 and '127, instead of the center differential gear unit with the front and rear propeller shafts, each of the vehicles is provided with a variable displacement hydraulic motor for driving the front differential gear unit, a fixed displacement hydraulic motor for driving the rear differential gear unit, and a common hydraulic pump for supplying both the hydraulic motors with hydraulic oil one after another, thereby increasing a free space for arranging various parts.

With respect to the disclosed conventional hydraulic driving vehicles, it is desired for smoothly driving the steerable front wheels that the displacement of the front hydraulic motor is reduced as far as possible so as to correspond to the reduced hydraulic oil after passing the rear hydraulic motor. However, such displacement of the front hydraulic motor causes increase of the rotary speed of the front hydraulic motor, thereby requiring increase of the deceleration ratio between the front hydraulic motor and the steerable front wheels so as to be balanced with the rotary speed of the unsteerable rear wheels. Upsizing of a deceleration gear train between the front hydraulic motor and the front differential gear unit for ensuring the increased deceleration ratio is not desired because it causes the front steering transaxle incorporating the deceleration gear train to expand the vehicle vertically and lengthwise so as to reduce ground clearance below.



Further, the rotary axis of the front hydraulic motor (its motor shaft) is disposed perpendicularly to that of the axles of the front wheels. If the front hydraulic motor and the front differential gear unit are disposed in a transaxle casing, the transaxle casing must be large lengthwise of the vehicle so as to ensure the length of the motor shaft.

Further, if a steering transaxle incorporating a variable displacement hydraulic motor, a deceleration gear train and a differential gear unit is to be constructed, it requires many parts and units to be assembled and properly located. Easy assemblage of the steering transaxle such as to overcome the difficulty of assembling and locating many parts and units is desired for reducing labor and time.

Further, the vehicle disclosed in the document '127 is provided with brakes in the rear transaxle so as to individually brake the respective unsteerable rear wheels. Since the vehicle has the variable displacement hydraulic motor for driving the steerable front wheels, and the fixed displacement hydraulic motor for driving the unsteerable rear wheels, the steerable front wheels are accelerated and the unsteerable rear wheels are not reduced during turning of the vehicle. In brief, the high speed of the unsteerable rear wheels that occurs during straight traveling of the vehicle is kept even during turning of the vehicle, thereby increasing a centrifugal force applied onto the turning vehicle and making the vehicle unstable. Further, in this condition during turning of the vehicle, if the vehicle brake-turns, i.e., if one of the brakes is actuated for braking, a braking shock may occur.

## SUMMARY OF THE INVENTION

A first object of the invention is to provide a hydraulic steering transaxle which is compact and can be easily assembled.

To achieve the first object, according to a first aspect of the invention, a steering transaxle comprises: left and right drive shafts drivingly connected to respective steerable wheels; a differential gear unit differentially connecting the drive shafts to each other; a transaxle casing having an opening, the transaxle casing incorporating the differential gear unit and the drive shafts; a cover for covering the opening of the transaxle casing; a variable hydraulic motor having a movable swash plate, the hydraulic motor being provided on the inside of the cover so as to drive the differential gear unit; a motor control mechanism for controlling the movable swash plate, the motor control mechanism being provided on the outside of the cover; and a hydraulic oil port for oil supply and delivery of the hydraulic motor, the hydraulic oil port being provided on the outside of the cover. Due to the external arrangement of the motor control mechanism and the hydraulic oil port, the transaxle casing can be slimmed.

In the first aspect, preferably, according to a second aspect of the invention, the steering transaxle further comprises: left and right axle support units steerably provided on left and right ends of the transaxle casing; left and right axles supported by the respective axle support units, the steerable wheels being provided on the respective axles; and a pair of deceleration gear trains each of which is interposed between each of the drive shafts and each of the axles, each of the deceleration gear trains being disposed in each of the axle

support units. Due to the arrangement of the deceleration gear trains in the left and right axle support units, the transaxle casing can be further slimed.

In the first aspect, preferably, according to a third aspect of the invention, the cover, the hydraulic motor with the movable swash plate, the motor control mechanism and the hydraulic oil port constitute an assembly unit, which is detachably attached to the transaxle casing so that, by covering the opening with the cover, the hydraulic motor is disposed in the transaxle casing so as to be drivingly connected to the differential gear unit, thereby facilitating assembly and disassembly of the steering transaxle.

In the third aspect, preferably, according to a fourth aspect of the invention, the movable swash plate includes a pair of trunnion shafts, one of which is supported by the cover in the assembly unit. When the assembly unit is attached to the transaxle casing, the other trunnion shaft comes to be supported by the transaxle casing. Therefore, of the two trunnion shafts, only the other trunnion shaft is required to be located and assembled to the transaxle casing, thereby further facilitating assembly and disassembly of the steering transaxle.

In the fourth aspect, preferably, according to a fifth aspect of the invention, the hydraulic motor includes a motor shaft disposed in parallel to the drive shafts, so that a gear provided on the motor shaft meshes with an input gear of the differential gear unit so as to drivingly connect the hydraulic motor to the differential gear unit. The meshing gears on the motor shaft and the differential gear unit can be economic spur gears.

In the third aspect, preferably, according to a sixth aspect of the invention, the assembly unit includes a center section of the hydraulic motor fixed to the cover, so that, when the assembly unit is attached to the transaxle casing, the center section is sandwiched between the cover and the transaxle casing.

In the sixth aspect, preferably, according to a seventh aspect of the invention, the movable swash plate includes a pair of trunnion shafts both of which are supported by the cover in the assembly unit. Therefore, no trunnion shaft needs to be located and assembled to the transaxle casing when the assembly unit is attached to the transaxle casing, thereby further facilitating assembly and disassembly of the steering transaxle.

In the seventh aspect, preferably, according to an eighth aspect of the invention, the hydraulic motor includes a motor shaft disposed perpendicular to the drive shafts, and a bevel gear provided on the motor shaft meshes with a bevel input gear of the differential gear unit so as to drivingly connect the hydraulic motor to the differential gear unit.

In the first aspect, preferably, according to a ninth aspect of the invention, the hydraulic motor includes a cylinder block whose rotary center axis is disposed coaxially to the drive shafts. The cylinder block is directly connected to an input portion of the differential gear unit. Therefore, the hydraulic motor, the differentially gear unit and the drive shafts are disposed coaxially so as to slim the steering transaxle.

In the first aspect, preferably, according to a tenth aspect of the invention, the motor control mechanism is operatively connected to an active portion of a linkage between a steering operation device and each of the steerable wheels so as to control the slant angle of the movable swash plate according to the steered angle of the steerable wheels.

In the first aspect, preferably, according to an eleventh aspect of the invention, the motor control mechanism includes: a rotary shaft supported by the cover to interlock with the active portion; a cam provided on the rotary shaft; and a control lever supported by the cover to interlock with the movable swash plate. The rotary shaft is rotated by movement of the active portion so that the cam acts to move the control lever with the movable swash plate. Therefore, the motor control mechanism becomes simple and economic.

In the eleventh aspect, preferably, according to a twelfth aspect of the invention, the motor control mechanism further includes: a torque spring, one end of the torque spring engaging with the control lever; and a retaining member for retaining the other end of the torque spring. When the control lever is rotated by the action of the cam, the one end of the torque spring engaging with the control lever is moved away from the other end of the torque spring retained by the retaining member so as to cause a biasing force of the torque spring for returning the control lever with the movable swash plate.

In the twelfth aspect, preferably, according to a thirteenth aspect of the invention, the position of the retaining member retaining the other end of the torque spring can be adjusted. Therefore, the position of the movable swash plate, i.e., the displacement of the hydraulic motor during straight traveling of a vehicle can be adjusted.

In the first aspect, preferably, according to a fourteenth aspect of the invention, the cover is disposed on a proximal side of the transaxle casing lengthwise of a vehicle having the steering transaxle. Alternatively, according to a fifteenth aspect of the invention, the cover is disposed on a distal side of the transaxle casing lengthwise of a vehicle having the steering transaxle. Any of the proximal and distal sides of the transaxle casing can be optionally selected for arranging the cover with the exposed motor control mechanism and hydraulic oil port in consideration of positions of other members, like a tie rod or a power steering actuator, adjacent to the transaxle casing, thereby ensuring a good layout of the steering transaxle.

A second object of the invention is to provide a hydraulic driving vehicle having front and rear hydraulic motors for steerable wheels and unsteerable wheels, which can turn or brake-turn at a moderate speed while regulating the speed ratio between the steerable wheels and the unsteerable wheels.

To achieve the second object, according to a sixteenth aspect of the invention, a vehicle comprises: left and right steerable wheels; a fixed displacement hydraulic motor for driving the steerable wheels; left and right unsteerable wheels; a variable displacement hydraulic motor for driving the unsteerable wheels; and a hydraulic pump for supplying oil to the fixed displacement hydraulic motor and the variable displacement hydraulic motor. The displacement of the variable displacement hydraulic motor is changed according to the steered angle of the steerable wheels. Therefore, to regulate the speed ratio between the steerable wheels and the unsteerable wheels during turning of the vehicle so that the vehicle can turn at a moderate speed, the unsteerable wheels are decelerated instead of the steerable wheels being accelerated.

In the sixteenth aspect of the invention, preferably, according to a seventeenth aspect of the invention, the vehicle further comprises a pair of brakes for braking the respective unsteerable wheels. The brakes can be actuated for braking individually. When one of the brakes is actuated for braking, the displacement of the variable displacement hydraulic motor is changed in addition to the change thereof according to the steered angle of the steerable wheels. Therefore, the speed of the vehicle in brake-turn can be further moderated.

Alternatively, to achieve the second object, according to an eighteenth aspect of the invention, a vehicle comprises: left and right steerable wheels; a variable displacement hydraulic motor for driving the steerable wheels; left and right unsteer-

able wheels; a variable displacement hydraulic motor for driving the unsteerable wheels; and a hydraulic pump for supplying oil to the hydraulic motors. The displacement of at least one of the hydraulic motors is changed according to the steered angle of the steerable wheels. Any of the hydraulic motors may be selectively changed in displacement during turning of the vehicle correspondingly to various conditions.

In the eighteenth aspect, preferably, according to a nineteenth aspect of the invention, the vehicle further comprises a pair of brakes for braking the respective unsteerable wheels. The brakes can be actuated for braking individually. When one of the brakes is actuated for braking, the displacement of at least one of the hydraulic motors is changed in addition to the change of displacement according to the steered angle of the steerable wheels. Any of the hydraulic motors may be selectively changed in displacement during turning and brake-turning of the vehicle correspondingly to various conditions. Further, it is possible to reduce the degree of displacement change of each of the hydraulic motors.

In the nineteenth aspect of the invention, preferably, according to a twentieth aspect of the invention, the displacement of one of the hydraulic motors is changed according to the steered angle of the steerable wheels, and the displacement of the other hydraulic motor is changed when one of the brakes is actuated for braking. Therefore, the degree of displacement change of each of the hydraulic motors corresponding to turning and brake-turning of the vehicle is reduced.

These, further and other objects, features and advantages will appear more fully from the following detailed description with reference to accompanying drawings.

## BRIEF DESCRIPTION OF THE DRAWINGS

FIG. **1** is a diagram of a four-wheel driving vehicle **100** equipped with an unsteering transaxle **10** and a steering transaxle **1**, showing its mechanical and hydraulic structure, wherein a variable displacement hydraulic motor **30** is disposed in steering transaxle **1**, and a fixed displacement hydraulic motor **82** in unsteering transaxle **10**.

FIG. **2** is a fragmental sectional plan view of steering transaxle **1**, showing that variable displacement hydraulic motor **30** supported by a motor support cover **31** is drivingly connected to a differential gear unit **25** in a transaxle casing **21**.

FIG. **3** is a cross sectional view taken along III-III line of FIG. **2**.

FIG. **4** is a cross sectional view taken along IV-IV line of FIG. **2** when motor support cover **31** is removed from transaxle casing **21**.

FIG. **5** is the same view as FIG. **4** when transaxle casing **21** is covered with motor support cover **31**.

FIG. **6** is a sectional rear view of a right axle support unit **23**R attached to a right end of a right casing part **21**R of transaxle casing **21**.

FIG. **7** is a sectional rear view of an alternative right axle support unit **23**R' attached to a right end of an alternative right casing part **21**R' of transaxle casing **21**.

FIG. **8** is a fragmental sectional plan view of steering transaxle **1**, showing that variable displacement hydraulic motor **30** supported by an alternative motor support cover **71** is drivingly connected to differential gear unit **25** in transaxle casing **21**.

FIG. **9** is a fragmental sectional plan view of steering transaxle **1**, showing that an alternative variable displacement hydraulic motor **130** supported by an alternative motor support cover **131** is drivingly connected to an alternative differential gear unit **125** in an alternative transaxle casing **121**.

FIG. **10** is a cross sectional view taken along IX-IX line of FIG. **9**.

FIG. **11** is a sectional view of unsteering transaxle **10** with an HST **80**.

FIG. **12** is a sectional view of a center section **87** for HST **80**.

FIG. **13** is a diagram of an alternative four-wheel driving vehicle **100**A equipped with an alternative unsteering transaxle **10**A and an alternative steering transaxle **1**A, showing its mechanical and hydraulic structure, wherein mechanical auxiliary transmissions **19** and **95** are disposed in respective transaxles **1**A and **10**A.

FIG. **14** is a diagram of an alternative four-wheel driving vehicle **100**B equipped with an alternative unsteering transaxle **10**B and an alternative steering transaxle **1**B, showing its mechanical and hydraulic structure, wherein a fixed displacement hydraulic motor **230** is disposed in steering transaxle **1**B, and a variable displacement hydraulic motor **282** in unsteering transaxle **10**B.

FIG. **15** is a fragmental sectional plan view of steering transaxle **1**B, showing that fixed displacement hydraulic motor **230** supported by an alternative motor support cover **231** is drivingly connected to differential gear unit **25** in transaxle casing **21**.

FIG. **16** is a sectional view of unsteering transaxle **10**B with an HST **280**.

FIG. **17** is a diagram of an alternative four-wheel driving vehicle **100**C equipped with unsteering transaxle **10**B and steering transaxle **1**B, showing its mechanical and hydraulic structure, wherein variable displacement hydraulic motor **282** is servo-controlled.

FIG. **18** is a fragmental sectional plan view of steering transaxle **1**B, showing that fixed displacement hydraulic motor **230**A supported by an alternative motor support cover **271** is drivingly connected to differential gear unit **25** in transaxle casing **21**.

FIG. **19** is a diagram of an alternative four-wheel driving vehicle **100**D equipped with an alternative unsteering transaxle **10**C and steering transaxle **1**, showing its mechanical and hydraulic structure, wherein servo-controlled variable displacement hydraulic motor **30** is disposed in steering transaxle **1**, and servo-controlled variable displacement hydraulic motor **282** and a mechanical auxiliary transmission **95***a* are disposed in unsteering transaxle **10**C.

FIG. **20** is a table representing a control pattern of movable swash plates **35** and **282***b* of hydraulic motors **30** and **282** in vehicle **100**D.

## DETAILED DESCRIPTION OF THE INVENTION

As shown in FIG. **1**, a four-wheel driving vehicle **100** is equipped with a steering transaxle **1** and an unsteering transaxle **10**. In the following description, for convenience, steering transaxle **1** is referred to as a front transaxle, and unsteering transaxle **10** as a rear transaxle, however, they may be exchanged in the fore-and-aft direction of vehicle **100**. The same is said about later-discussed alternative vehicles.

Front steering transaxle **1** incorporates a variable displacement hydraulic motor **30** for driving front steerable wheels **22**L and **22**R, and rear unsteering transaxle **10** is provided with a fixed displacement hydraulic motor **82** for driving rear unsteerable wheels **92**L and **92**R. Hydraulic motors **30** and **82** are fluidly connected in tandem to a variable displacement hydraulic pump **81** so as to constitute a hydrostatic transmission (HST) circuit for driving four wheels **22**L, **22**R, **92**L and

92R. Hydraulic pump **81** has a movable swash plate **81***b* operatively connected to a speed control lever **15** provided on vehicle **100**.

An output shaft of an engine **4** is drivingly connected to an input shaft (a pump shaft) **81***a* of hydraulic pump **81**. Pump shaft **81***a* also serves as a driving shaft of a charge pump **16**. Hydraulic pump **81** and motor **82** constitute an HST **80** for driving rear unsteerable wheels **92**L and **92**R of rear unsteering transaxle **10**. HST **80** includes outwardly open ports **87***f* and **87***g* fluidly connected to a drive mode switching valve **89** which is shiftable between a two-wheel drive position and a four-wheel drive position. Pipes **88***a* and **88***b* are extended from valve **89** to external ports **37***c* and **37***d* of front steering transaxle **1** for hydraulic oil supply and delivery to and from hydraulic motor **30**.

When valve **89** is set at the two-wheel drive position, ports **87***f* and **87***g* are mutually connected so as to make HST **80** into a closed circuit isolated from hydraulic motor **30**, thereby transmitting the power of engine **4** to only rear unsteerable wheels **92**L and **92**R. When valve **89** is set at the four-wheel drive position, ports **87***f* and **87***g* are connected to respective pipes **88***a* and **88***b* so as to realize the four-wheel driving HST circuit including hydraulic pump **81** and motors **82** and **30**, thereby transmitting the power of engine **4** to all wheels **22**L, **22**R and **92**L ad **92**R. In other words, HST **80** includes a closed circuit for circulating oil between hydraulic pump **81** and motor **82**. The closed circuit includes a pair of lines L**1** and L**2**. One of lines L**1** and L**2** is interposed between a supply port of hydraulic pump **81** (i.e., one of kidney ports **87***a* and **87***b*) and a delivery port of hydraulic motor **82** (i.e., one of kidney ports **87***d* and **87***e*), and the other of lines L**1** and L**2** is interposed between a delivery port of hydraulic pump **81** (i.e., the other of kidney ports **87***b* and **87***a*) and a supply port of hydraulic motor **82** (i.e., the other of kidney ports **87***e* and **87***d*). Line L**1** is entirely disposed in unsteering transaxle **10**. Line L**2** is partly disposed outside of unsteering transaxle **10**. When valve **89** is set at the two-wheel drive position, valve **89** fluidly isolates hydraulic motor **30** from ports **87***f* and **87***g* and fluidly connects ports **87***f* and **87***g* to each other, thereby completing line L**2** interposed between hydraulic pump **81** and motor **82** so that line L**2** does not include hydraulic motor **30**. When valve **89** is set at the four-wheel drive position, valve **89** fluidly connects supply and delivery ports of hydraulic motor **30** via pipes **88***a* and **88***b* to ports **87***f* and **87***g*, respectively, thereby completing line L**2** interposed between hydraulic pump **81** and motor **82** so that line L**2** includes hydraulic motor **30** and pipes **88***a* and **88***b*.

HST **80** for driving unsteerable wheels **92**L and **92**R integrally provided in unsteering transaxle **10** may be alternatively separated from unsteering transaxle **10**, or only one of hydraulic pump **81** and motor **82** may be provided in unsteering transaxle **10**.

As shown in FIGS. **1** and **2**, steering transaxle **1** includes a transaxle casing **21** and left and right axle support units **23**L and **23**R steerably mounted on respective left and right ends of transaxle casing **21**. A steering wheel **14** is interlockingly connected to axle support units **23**L and **23**R so as to steer them. Axle support units **23**L and **23**R incorporate respective deceleration gear trains (see FIG. **6**) and support respective front wheels **22**L and **22**R drivingly connected to the deceleration gear trains at the outsides thereof so that front wheels **22**L and **22**R serve as steerable wheels.

As shown in FIG. **5**, transaxle casing **21** consists of a left casing part **21**L and a right casing part **21**R fastened to each other by bolts. Right casing part **21**R is provided at the top portion thereof with a penetrating hole **21***u* through which a center pin **6** is passed so as to suspend transaxle casing **21** from a chassis of vehicle **100**.

As shown in FIGS. **1** and **2**, transaxle casing **21** incorporates a differential gear unit **25** and left and right drive shafts **24**L and **24**R mutually differentially coupled by differential gear unit **25**. Transaxle casing **21** has an opening **21***d* between left and right casing parts **21**L and **21**R, which is covered with a motor support cover **31**. Variable displacement hydraulic motor **30** is fixed onto an inside surface of motor support cover **31** so as to be disposed in transaxle casing **21**. A motor control mechanism **40** for controlling the displacement of hydraulic motor **30** (the slant angle of a movable swash plate **35** of hydraulic motor **30**), and hydraulic oil ports **37***c* and **37***d* for supply and delivery of oil to and from hydraulic motor **30** are provided on an outside surface of motor support cover **31** so as to be exposed to the outside of transaxle casing **21**. Hydraulic oil ports **37***c* and **37***d* serve as pipe connectors connected to hydraulic oil pipes **88***a* and **88***b*.

Hydraulic motor **30**, motor control mechanism **40** and hydraulic oil ports **37***c* and **37***d* are integrated with motor support cover **31** so as to constitute an assembly unit, which is removed from transaxle casing **21** by removing motor support cover **31** from transaxle casing **21**, thereby facilitating their easy maintenance or adjustment. Further, by removing hydraulic motor **30** together with motor support cover **31** from transaxle casing **21**, parts including differential gear unit **25** disposed in transaxle casing **21** are exposed so as to facilitate their easy maintenance.

Since the deceleration gear train in each of axle support units **23**L and **23**R has a large deceleration ratio, hydraulic motor **30** is allowed to have a small displacement. As a result, hydraulic motor **30** can be downsized and lightened, and its motor shaft **33** can be rotated at high speed and low torque by the hydraulic oil reduced in pressure by driving hydraulic motor **82** preceding hydraulic motor **30**.

Differential gear unit **25** will be described. As shown in FIG. **2**, differential gear unit **25** differentially coupling drive shafts **24**L and **24**R to each other is disposed in right casing part **21**R. Differential gear unit **25** comprises a differential casing **25***a*, a bull gear **25***b*, a pinion shaft **25***c*, bevel pinions **25***d* and bevel differential side gears **25***e*. Differential casing **25***a* is journalled at left and right ends thereof by transaxle casing **21** (right casing part **21**R) through respective bearings **21***b* and relatively rotatably penetrated by drive shafts **24**L and **24**R at the respective left and right ends thereof. Bull gear **25***b* is fixed on the outer periphery of differential casing **25***a* so as to serve as an input gear of differential gear unit **25**. Pinion shaft **25***c* is supported in differential casing **25***a* perpendicularly to drive shafts **24**L and **24**R. Pinions **25***d* are oppositely pivoted on pinion shaft **25***c*. Each of differential side gears **25***e* is fixed on each of drive shafts **24**L and **24**R and disposed in differential casing **25***a* so as to mesh with both pinions **25***d*.

Bull gear **25***b* meshes with a motor gear **33***c* fixed on motor shaft **33** of hydraulic motor **30** so as to constitute a deceleration gear train between hydraulic motor **30** and differential gear unit **25**. Since motor shaft **33** and drive shafts **24**L and **24**R are parallel, mutually meshing bull gear **25***b* and motor gear **33***c* may be inexpensive spur gears or helical gears, and the width of steering transaxle **1** lengthwise of vehicle **100** can be shortened regardless of the length of motor shaft **33**.

Hydraulic motor **30** will be described. As shown in FIGS. **2** and **4**, right casing part **21**R has a portion **21***e* projecting rearward behind differential gear unit **25** such as to form a motor chamber **21***c* therein. Opening **21***d* is provided at the rear end of portion **21***e* so as to open motor chamber **21***c*.

As shown in FIGS. **2** and **3**, a center section **32** is integrally formed of motor support cover **31**. Hydraulic motor **30** is mounted on the inside surface of center section **32**, and hydraulic oil ports **37***c* and **37***d* on the outside surface of center section **32**.

Movable swash plate **35** has front and rear trunnion shaft shafts **35***a* and **35***b*. Trunnion shaft **35***a* is rotatably supported by transaxle casing **21** (right casing part **21**R), and trunnion shaft **35***b* by motor support cover **31**.

The interior space of transaxle casing **21** is filled with oil so as to be tightly fluidly isolated from the outside of transaxle casing **21**, including motor chamber **21***c* covered with motor support cover **31**, but excluding hydraulic oil ports **37***c* and **37***d*.

Left and right bearing support walls **31***a* and **31***b* are integrally formed of motor support cover **31** so as to project in parallel with center section **32** therebetween. Bearings **33***a* and **33***b* are fitted in respective bearing support walls **31***a* ad **31***b* so as to journal left and right ends of motor shaft **33**. Center section **32** has a central axial penetrating hole **32***a* through which motor shaft **33** is rotatably passed at its intermediate portion.

As shown in FIGS. **2** and **3**, center section **32** is formed therein with upper and lower oil passages **32***c* and **32***d*. Ports **37***c* and **37***d* are fitted onto respective outer ends of oil passages **32***c* and **32***d*. Center section **32** is also formed therein with kidney ports **38***c* and **38***d* open at a right surface thereof in communication with respective oil passages **32***c* and **32***d*.

As shown in FIG. **2**, a cylinder block **34** is disposed between center section **32** and bearing support wall **31***a*, and slidably rotatably fitted to center section **32** through a valve plate **36** so as to be fluidly connected to kidney ports **38***c* and **38***d*. Cylinder block **34** is not-relatively rotatably fitted on motor shaft **33**, which serves as the rotary center axis of cylinder block **34**.

Pistons **39** are reciprocally fitted in cylinder block **34** around motor shaft **33**, and a spring **34***b* is wound around motor shaft **33** in cylinder block **34** so as to bias cylinder block **34** toward center section **32**.

Movable swash plate **35** freely penetrated by motor shaft **33** is disposed between cylinder block **34** and bearing support wall **31***a*, and pivotally supported on cylinder block **34**. Movable swash plate **35** has a thrust bearing **35***c* fitting heads of pistons **39**. By rotating movable swash plate **35** around trunnion shafts **35***a* and **35***b*, strokes of pistons **39** are changed so as to change the displacement of hydraulic motor **30**.

As shown in FIG. **2**, motor gear **33***c* meshing with bull gear **25***b* of differential gear unit **25** is disposed between center section **32** and bearing support wall **31***b*.

Transaxle casing **21** (right casing part **21**R) is formed with a boss **21***a* between motor chamber **21***c* and the chamber incorporating drive shaft **24**R in front thereof. When motor support cover **31** is fitted onto transaxle casing **21** (right casing part **21**R), trunnion shaft **35***a* is rotatably fitted into boss **21***a*, thereby easily locating hydraulic motor **30** in transaxle casing **21** (casing part **21**R).

Motor control mechanism **40** for controlling the displacement of hydraulic motor **30** will be described. As shown in FIGS. **2**, **4** and **5**, motor control mechanism **40** provided on motor support cover **31** is disposed on the proximal (rear) side of transaxle casing **21** in the longitudinal direction of vehicle **100** so as to be prevented from colliding with obstacles during forward traveling of vehicle **100**.

To ensure a good balance or compactness, a tie rod and a linkage from steering wheel **14** (such as a power steering cylinder) are appreciated to be disposed opposite to motor control mechanism **40** with respect to transaxle casing **21**. Therefore, the tie rod and the linkage from steering wheel **14** come into a space in front of transaxle casing **21**, i.e., on the distal side of transaxle casing **21** in the longitudinal direction of vehicle **100**. Alternatively, if protection of the tie rod and the like is preferred to that of motor control mechanism **40**, they may be disposed behind transaxle casing **21** (on the proximal side of transaxle casing **21** in the longitudinal direction of vehicle **100**), and motor control mechanism **40** with motor support cover **31** in front of transaxle casing **21** (on the distal side of transaxle casing **21** in the longitudinal direction of vehicle **100**). Motor support cover **31** may be also disposed at the front surface of transaxle casing **21** if an engine oil pan or a linkage for suspending a mid-mount working machine, e.g., a mower, must be disposed behind transaxle casing **21**. The same is said about later-discussed various alternative steering transaxles.

As shown in FIGS. **2** and **5**, trunnion shaft **35***b* supported by motor support cover **31** projects at its rear end rearward from motor support cover **31**. A control lever **42** has a boss portion **42***a* fixed on the rear end of trunnion shaft **35***b*. Doglegged control lever **42** includes a first arm **42***b* extended rightward from boss portion **42***a*, and a second arm **42***c* extended downwardly leftward from boss portion **42***a*.

On the right side of trunnion shaft **35***b*, motor support cover **31** is bored by a penetrating hole **31***g* through which a camshaft **41** is rotatably passed. A rear end of camshaft **41** projects rearward from motor support cover **31** and its upper portion is cut away so as to form its lower portion into a semicircular cam **41***a* having a flat surface and left and right angled ends of the flat surface. The angled ends serve as cam profiles of cam **41***a*.

An arm **43** is fixed at its bottom end to camshaft **41** in front of cam **41***a*. A link rod **44** is pivotally connected at one end thereof to a top end of arm **43**. Link rod **44** is connected at the other end thereof to an active portion of a linkage between steering wheel **14** and steerable wheels **22**L and **22**R. As shown in FIG. **1**, for example, an arm **14***a* rotated according to the rotation of steering wheel **14** may be operatively connected link rod **44**. Alternatively, link rod **44** may be connected to a steerable portion (such as a later-discussed steered casing **23***b*) of one of axle support units **23**L and **23**R.

Referring to FIG. **5**, when vehicle **100** travels straight, the flat surface of semicircular cam **41***a* is disposed horizontally and first arm **42***b* of control lever **42** is put on the flat surface of cam **41***a*. When vehicle **100** turns either left or right so as to move link rod **44** rightward (as expressed by an arrow R in FIG. **5**), arm **43** rotates clockwise so as to raise the left cam profile of cam **41***a*, thereby pushing up first arm **42***b*. Therefore, control lever **42** is rotated counterclockwise so as to rotate movable swash plate **35** in the direction for reducing its slant angle, i.e., for reducing the displacement of hydraulic motor **30** (for increasing the rotary speed of hydraulic motor **30**).

If the turning direction of vehicle **100** is the other of left and right such as to move link rod **24** leftward (as expressed by an arrow L in FIG. **5**), arm **43** rotates counterclockwise so as to raise the right cam profile of cam **41***a*, thereby pushing up first arm **42***b* and rotating control lever **42** counterclockwise. Consequently, whether vehicle **100** turns left or right, swash plate **35** rotates in the direction for reducing its slant angle, i.e., for reducing the displacement of hydraulic motor **30** (for increasing the rotary speed of hydraulic motor **30**).

As shown in FIGS. **2** and **5**, a torque spring **45** is wound around boss portion **42***a* of control lever **42** so as to bias control lever **42** toward its initial position defining the maximum slant angle of movable swash plate **35**, i.e., the maximum displacement of hydraulic motor **30**. Both end portions

**45***a* and **45***b* of spring **45** are twisted to cross each other and extended so as to pinch pins **42***d* and **46**. Pin **42***d* projects from second arm **42***c* of control lever **42**. If control lever **42** is rotated for reducing the slant angle of swash plate **35**, i.e., reducing the displacement of hydraulic motor **30**, pin **42***d* pushes one of end portions **45***a* and **45***b* of spring **45** away from the other retained by pin **46**, thereby causing the biasing force of spring **45** for returning control lever **42** to the initial position.

Pin **46** has a pivot portion **46***a* planted in motor support cover **31** and an eccentric portion **46***b*. Correctly, the portion of pin **46** pinched by end portions **45***a* and **45***b* of spring **45** is eccentric portion **46***b*. Pivot portion **46***a* is screwed into motor support cover **31** and fastened to motor support cover **31** by nuts **47**. By loosening nuts **47**, pivot portion **46***a* can be rotated relative to motor support cover **31** so as to revolve eccentric portion **46***b* around pivot portion **46***a*, thereby adjusting the initial position of control lever **42**.

Each of symmetric axle support units **23**L and **23**R will be described with reference to representing right axle support unit **23**R shown in FIG. **6**. Each of axle support units **23**L and **23**R includes a kingpin casing **23***a*, a steered casing **23***b* and an axle casing **23***c*. Kingpin casing **23***a* is fixed to an outer end of each of transaxle casings **21**L and **21**R and bent downward. Steered casing **23***b* is relatively rotatably disposed around the downwardly extending portion of kingpin casing **23***a*. Upper and lower bearings **51***a* and **51***b* are interposed between kingpin casing **23***a* and steered casing **23***b* therearound. Steered casing **23***b* has a vertically cut open surface to which a bowl-like axle casing **23***c* is jointed.

In the bent portion of kingpin casing **23***a*, a bevel gear **52***a* is formed on the outer end of each of drive shafts **24**L and **24**R. A transmission shaft **52** is disposed on the central axis of the downwardly extending portion of kingpin casing **23***a*. A bevel gear **52***b* fixed on the top end of transmission shaft **52** is rotatably supported by kingpin casing **23***a* through a bearing **51***c*, and meshes with bevel gear **52***a*. Transmission shaft **53** projects downward from the bottom end of the downwardly extending portion of kingpin casing **23***a* so as to be fixedly provided on its bottom end with a bevel gear **52***c* and rotatably supported on a bottom portion of steered casing **23***b* through a bearing **51***d*.

Bevel gear **52***c* meshes with a large bevel final gear **52***d* fixed on an axle **53**. Mutually joined steered casing **23***b* and axle casing **23***c* enclose final gear **52***d*. Final gear **52***d* is rotatably supported through a bearing **51***c* by steered casing **23***b*, and through a bearing **51***f* by axle casing **23***c*. An outer portion of axle **54** projecting outward from axle casing **23***c* is formed into a flange **55** to be fixed to each of wheels **22**L and **22**R.

In this way, gears **52***a*, **52***b*, **52***c* and **52***d* in each of axle support units **23**L and **23**R decelerate the output rotation of hydraulic motor **30** transmitted to axle **54** of each of steerable wheels **22**L and **22**R through each of drive shafts **24**L and **24**R and transmission shaft **53**. Such an arrangement of deceleration gears in axle support units **23**L and **23**R allow reduction of the displacement of hydraulic motor **30**, which enables high-speed and low-torque rotation of hydraulic motor **30** for saving load on hydraulic pump **81**, and facilitates compactness of transaxle casing **21** disposed just below the vehicle chassis.

At least one of steered casings **23***b* (or axle casings **23***c*) is operatively connected to steering wheel **14**. Steering casings **23***b* of both axle support units **23**L and **23**R are mutually connected by a tie rod. Steered casing **23***b* of either axle support unit **23**L or **23**R may serve as the above-mentioned active portion to be operatively connected to arm **43** through link rod **44** so as to change the displacement of hydraulic motor **30** in association with the operation of steering wheel **14**.

FIG. **7** illustrates an alternative right casing part **21**R' of transaxle casing **21** and an alternative right axle support units **23**R'. They represent respective alternative left ones provided in the left portion of transaxle casing **21**, which are laterally symmetric with the illustrated right ones. A steered casing **61** is laterally rotatably fitted onto an outer end portion of right casing part **21**R' of transaxle casing **21** through upper and lower coaxial kingpins **62***a* and **62***b*. A bearing casing **68** and steered casing **61** with a ring gear **66***e* therebetween are fastened together by bolts so as to enclose a space **69** for incorporating a planetary gear mechanism **64** including ring gear **66***e*.

Planetary gear mechanism **64** comprises a sun gear **66***a*, a planetary gear (or planetary gears) **66***d* and a carrier **66***b* in addition to ring gear **66***e*. Sun gear **66***a* is fixed on a distal end of sun gear shaft **63***a* rotatably supported by steered casing **61** through a bearing **67***a*, and by carrier **66***b* through a bearing **67***b*. Between steered casing **61** and casing part **21**R', a universal joint **63** couples sun gear shaft **63***a* to drive shaft **24**R. The bending pivot point between sun gear shaft **63***a* and drive shaft **24**R is disposed between upper and lower kingpins **62***a* and **62***b*.

Carrier **66***b* surrounding sun gear **66***a* and sun gear shaft **63***a* is rotatably supported by steered casing **61** through a bearing **67***c*, and by bearing casing **68** through a bearing **67***d*. Planetary gear (gears) **66***d* is (are) pivoted by carrier **66***b* through a pivot pin (respective pivot pins) **66***c*. Planetary gear (gears) **66***d* meshes (mesh) with sun gear **66***a* and an internal gear formed on the inner periphery of ring gear **66***e*. A flange **65** to be fixed to each of steerable wheels **22**L and **22**R is rotatably fitted on an outer end of steered casing **68**. Flange **65** has an axle portion **65***a* axially fitted into carrier **66***b* and fastened to carrier **66***b* by a bolt (or bolts).

In this way, carrier **66***d* fixed to flange **65** and each of wheels **22**L and **22**R is rotated by revolution of planetary gear (gears) **66***d* around sun gear **66***a* that is being rotated by each of drive shafts **24**L and **24**R.

At least one of steered casings **61** is operatively connected to steering wheel **14**. Steering casings **61** are mutually connected by a tie rod. One of steered casings **61** may serve as the above-mentioned active portion to be operatively connected to arm **43** through link rod **44** so as to change the displacement of hydraulic motor **30** in association with the operation of steering wheel **14**.

When the axle supporting structure shown in FIG. **6** is employed, axles (central axes) of steerable wheels **22**L and **22**R are disposed lower than drive shafts **24**L and **24**R. When the axle supporting structure shown in FIG. **7** is employed, axles (central axes) of steerable wheels **22**L and **22**R are disposed as high as drive shafts **24**L and **24**R. Any of the two structures may be selected at need.

FIG. **8** illustrates variable displacement hydraulic motor **30** in an alternative motor support cover **71** attached to transaxle casing **21**. Unless being specified, parts and members designated by the same reference numerals as those of FIG. **2** are identical in structure or function to those of FIG. **2**.

Motor support cover **71** supporting hydraulic motor **30** is fastened to transaxle casing **21** through a center section **72** of hydraulic motor **30**. A movable swash plate **75** of hydraulic motor **30** has trunnion shafts **75***a* and **75***b* rotatably supported by motor support cover **71**. Trunnion shafts **75***a* and **75***b* are disposed in parallel to drive shafts **24**L and **24**R.

Motor support cover **71** includes a casing part **71***a* and a casing cover part **71***b*. Casing part **71***a* is penetrated by a hole

71*f* into which trunnion shaft **75***b* is rotatably fitted. Casing cover part **71***b* having a recess **71***g*, into which trunnion shaft **75***a* is rotatably fitted, is fixedly fitted onto an (left) open side surface of casing part **71***a* so that casing part **71***a* and casing cover part **71***b* encloses a motor chamber **71***c* for incorporating hydraulic motor **30**. By removing casing cover part **71***b* from casing part **71***a*, the open side surface of casing part **71***a* is exposed so as to facilitate disassembly of hydraulic motor **30**.

Hydraulic motor **30** has a motor shaft **73** perpendicular to drive shafts **24**L and **24**R. Motor shaft **73** is rotatably passed through a penetrating hole **72***a* of center section **72**. Motor shaft **73** is journalled at its rear end by cover part **71***a* through a bearing **73***a*. A front end of motor shaft **73** is rotatably fitted into a boss portion **21***h* formed in transaxle casing **21** (right casing part **21**R) through a bearing collar **73***b*. A motor gear **73***c* is fixed on motor shaft **73** between bearing collar **73***b* and center section **72**. Differential gear unit **25** has an alternative bevel bull gear **25***g* fixed on differential casing **25***a* meshing with motor gear **73***c*.

Center section **72** is a member separated from motor support cover **71** and transaxle casing **21** (right casing part **21**R) and fixedly sandwiched between motor support cover **71** and casing part **21**R. Hydraulic oil passages **78***c* and **78***d* are bored in center section **72**, and hydraulic oil ports **78***a* serving as pipe connectors are externally fitted on center section **72** so as to communicate with respective passages **78***c* and **78***d*.

A cylinder block **74** is not-relatively rotatably fitted on motor shaft **73** serving as the rotary center axis of cylinder block **74**, and slidably rotatably fitted to the rear end of center section **72** through a valve plate **76**. Pistons **79** are reciprocally fitted into respective cylinder holes **74***a* formed in cylinder block **74**. Hydraulic oil passages **78***c* and **78***d* fluidly communicate with cylinder holes **74***a* through valve plate **76**. Heads of pistons **79** project rearward from cylinder block **74** and abut against movable swash plate **75** therebehind. Motor shaft **73** is freely passed through movable swash plate **75**.

Motor control mechanism **40** including camshaft **41** and control lever **42**, similar to that of FIG. **2**, is provided on casing part **71***a* of motor support cover **71**. However, since trunnion shaft **75***b* serving as the rotary center shaft of control lever **42** is disposed in parallel to drive shafts **24**L and **24**R, camshaft **41** also becomes parallel to drive shafts **24**L and **24**R. Therefore, arm **43** fixed on camshaft **41** is rotatable perpendicularly to drive shafts **24**L and **24**R (lengthwise of vehicle **100**). Arm **43** may be interlockingly connected to any active portion of the linkage between steering wheel **14** and each of steerable wheels **22**L and **22**R. The only important function for arm **43** is to transmit the degree of left and right turning of steerable wheels **22**L and **22**R.

Hydraulic motor **30** including center section **72**, and motor control mechanism **40** are integrated with motor support cover **71** so as to be made into an assembly unit, thereby facilitating their easy maintenance or adjustment. When this assembly unit is assembled with transaxle casing **21**, center section **72** is fixedly fitted onto the rear end of right casing part **21**R so as to cover an opening **21***d*' formed in right casing part **21**R. The front end of motor shaft **73** is inserted into boss portion **21***h* of casing part **21**R through bearing collar **73***b*, thereby easily drivingly connecting hydraulic motor **30** to differential gear unit **25**. By separating center section **72** from casing part **21**R, hydraulic motor **30** together with motor support cover **71** can be easily removed from transaxle casing **21**.

To ensure a good balance or compactness, the tie rod and the linkage from steering wheel **14** are preferably disposed opposite to motor support cover **71** with respect to transaxle casing **21**, i.e., in front of transaxle casing **21**. Alternatively, if the tie rod, an engine oil pan, a linkage for supporting a mid-mount working machine or so on must be disposed behind transaxle casing **21**, motor support cover **71** with motor control mechanism **40** may be disposed in front of transaxle casing **21**.

FIGS. **9** and **10** illustrate steering transaxle **1** having an alternative transaxle casing **121** incorporating an alternative hydraulic motor **130** and an alternative differential gear unit **125**. Transaxle casing **121** has a rear opening **121***d* covered with a motor support cover **131**. As shown in FIG. **9**, transaxle casing **121** has a front wall **121***f* toward which a center section **132** integrally formed of motor support cover **131** is extended. In transaxle casing **121**, hydraulic motor **130** and differential gear unit **125** are distributed right and left, opposite to each other, with respect to center section **132**.

Center section **132** has a penetrating hole **132***c* through which drive shaft **24**R is freely passed. Further, drive shaft **24**R is disposed on the center axis of cylinder block **134** of hydraulic motor **130** and freely penetrates cylinder block **134**, a movable swash plate **135**, and a guide block **136** supporting movable swash plate **135**.

Differential gear unit **125** includes a differential casing **125***a*. A boss portion **125***z* is integrally formed on the right end of differential casing **125***a*, and extended into penetrating hole **132***c* around drive shaft **24**R so as to rotatably fit center section **132** through a bearing **121***b*. Differential casing **125***a* is journalled at the left end thereof by a bearing **121***a* which is fitted in a support block **131***a* fastened to motor support cover **131** by a bolt. Boss portion **125***z* surrounding drive shaft **24**R projects rightward from penetrating hole **132***c*. Boss portion **125***z* is spline-fitted into a center axial hole **134***c* of cylinder block **134** slidably rotatably fitted onto the right surface of center section **132**, thereby serving as an axial motor shaft of hydraulic motor **130**. In this way, differential casing **125***a* is rotatable integrally with cylinder block **134**. Further, differential casing **125***a* and hydraulic motor **130** are disposed coaxially around drive shaft **24**R so as to facilitate compactness of steering transaxle **1**.

Upper and lower hydraulic oil passages **132***a* and **132***b* are bored in center section **132**, and outwardly open at a rear surface of motor support cover **131**. Hydraulic oil ports **133***a* and **133***b* serving as pipe connectors are externally fitted on the rear surface of motor support cover **131** so as to communicate with respective passages **132***a* and **132***b*.

Parallel cylinder holes **134***a* are bored in cylinder block **134** around center axial hole **134***c*. Pistons **139** are reciprocally fitted into respective cylinder holes **134***a* and abut at head thereof against a thrust bearing **135***a* of movable swash plate **135**. Guide block **136** fixed to motor support cover **131** has an arcuate guide surface **136***a* to which movable swash plate **135** is slidably fitted. In this way, movable swash plate **135** is made as a cradle type.

Hydraulic motor **130** is provided with a motor control mechanism **140** assembled with motor support cover **131**. Referring to motor control mechanism **140**, upper and lower projections **135***b* are formed on the rear end of movable swash plate **135**, as shown in FIG. **10**. An arm **137***a* is clamped at one end thereof between projections **135***b*. Arm **137***a* is disposed perpendicular to drive axles **24**L and **24**R and rotatably supported by motor support cover **131**. The other end of arm **137***a* is formed into a boss fixed on an inner front end portion of a control shaft **137**. By rotating control shaft **137**, arm **137***a* is rotated together with control shaft **137** so as to change the slant angle of movable swash plate **135**, thereby changing the displacement of hydraulic motor **130**.

A torque spring **145** is wound around the boss of arm **137***a* on control shaft **137**. A second arm **137***b* is branched from arm **137***a*, and a pin **142***d* projects from second arm **137***b*. Both end portions **145***a* and **145***b* are twisted to cross each other and extended to clamp pin **142***d* and an eccentric portion **146***b* of a retaining pin **146** when movable swash plate **135** is disposed at its initial position for defining the maximum displacement of hydraulic motor **130**. If control shaft **137** is rotated for reducing the displacement of hydraulic motor **130**, pin **142***d* of arm **137***b* rotating together with control shaft **137** pushes one of end portions **145***a* and **145***b* away from the other end portion **145***b* or **145***a* retained by eccentric portion **146***a* of retaining pin **146** so as to generate the biasing force of spring **145** for returning movable swash plate **135** to its initial position for ensuring the maximum displacement of hydraulic motor **130**.

Retaining pin **146** has a pivot portion pivotally planted in motor support cover **131**. Eccentric portion **146***a* is eccentrically extended from the pivot portion. The pivot portion of retaining pin **146** is normally fastened to motor support cover **131** by a nut, for example. By loosening the nut and letting the pivot portion rotate relative to motor support cover **131**, eccentric portion **146***a* revolves around the pivot portion so as to adjust the initial position of arm **137***a* with movable swash plate **135**.

A boss portion **142***a* of a control arm **142** is fixed on the rear end of control shaft **137** behind motor support cover **131**. A camshaft **141** is disposed in parallel to control shaft **137** and rotatably supported by motor support cover **131**. The rear end of camshaft **141** projecting rearward from motor support cover **131** is formed into a semicircular cam **141***a* whose flat surface confronts an upper edge of control arm **142**. An arm **143** is fixed on camshaft **141**. Arm **143** may be interlockingly connected to any active portion of the linkage between steering wheel **14** and each of wheels **22**L and **22**R if arm **143** is rotated accordingly to the degree of left and right turning of wheels **22**L and **22**R.

In this way, motor control mechanism **140**, including arms **137***a* and **137***b*, control shaft **137**, control arm **142**, camshaft **141** and arm **143**, is assembled together with motor support cover **131** and hydraulic motor **130**. Such a resultant assembly unit can be easily attached or removed to and from transaxle casing **121**.

Cylinder block **134** having center axial hole **134***c* for passing boss portion **125***z* of differential casing **125***a* and drive shaft **24**R becomes diametrically large so as to be reduced in rotary speed, thereby saving the size or parts count of a deceleration gear for ensuring a deceleration ratio between hydraulic motor **130** and axles of steerable wheels **22**L and **22**R.

Incidentally, as shown in FIG. **10**, transaxle casing **121** has hole **21***u* through which center pin **6** is passed for hanging down steering transaxle **1** from a chassis of vehicle **100**.

Unsteering transaxle (main transaxle) **10** integrally provided with HST **80** including mutually fluidly connected hydraulic pump **81** and motor **82** will now be described with reference to FIGS. **1**, **11** and **12**. A casing of unsteering transaxle **10** is divided into an HST casing **80***a* and a differential gear casing **90**R by a plate-like center section **87** having opposite outer surfaces **87**A and **87**B, so that HST casing **80***a* is attached to outer surface **87**A, and differential gear casing **90**R is attached to outer surface **87**B. Center section **87** is formed with outer surfaces **87**C, **87**D and **87**E, which are disposed at respective ends of outer surfaces **87**A and **87**B and extended between outer surfaces **87**A and **87**B. Outer surfaces **87**C and **87**D are opposite to each other, and outer surface **87**E is extended between outer surfaces **87**C and **87**D.

HST casing **80***a* incorporates HST **80** including hydraulic pump **81** and motor **82** slidably rotatably fitted onto a pump mounting surface **87**P and a motor mounting surface **87**M, respectively, and pump and motor mounting surfaces **87**P and **87**M are formed on outer surface **87**A of center section **87**. Outer surface **87**C is closer to pump mounting surface **87**P than motor mounting surface **87**M, and outer surface **87**D is closer to motor mounting surface **87**M than pump mounting surface **81**P. Hydraulic pump **81** has movable swash plate **81***b* operatively connected to speed control lever **15**. Hydraulic pump **81** has axial pump shaft **81***a*, which is extended perpendicular to outer surfaces **87**A and **87**B, is freely passed through movable swash plate **81***b* and projects outward from HST casing **80***a* to be drivingly connected to engine **4**. Pump shaft **81***a* is journalled by HST casing **80***a* and center section **87**. Pump shaft **81***a* penetrates center section **87** from outer surface **87**A to outer surface **87**B and extends outward from outer surface **87**B, opposite to HST casing **80***a* and adjacent to differential gear casing **90**R so as to serve as the drive shaft of charge pump **16**, which is fitted to outer surface **87**B and disposed opposite to hydraulic pump **81** with respect to center section **87**. Hydraulic motor **82** has axial motor shaft **82***a* disposed in parallel to pump shaft **81***a* and journalled by HST casing **80***a* and center section **87**.

As shown in FIG. **12**, center section **87** is formed therein with kidney ports **87***a* and **87***b*, which are fluidly opened at pump mounting surface **87**P to hydraulic pump **81** so as to serve as supply and delivery ports of hydraulic pump **81**, and with kidney ports **87***d* and **87***e*, which are fluidly opened at motor mounting surface **87**M to hydraulic motor **82** so as to serve as supply and delivery ports of hydraulic motor **82**. Ports **87***f* and **87***g* are extended parallel to each other and are outwardly opened at outer surface **87**E of center section **87** so as to be fluidly connected to drive mode switching valve **89** disposed outside of center section **87** and serving as a connection means for connecting ports **87***f* and **87***g* to each other. In center section **87** are bored an oil passage **87***h* interposed between port **87***f* and kidney port **87***a*, an oil passage **87***c* interposed between kidney ports **87***b* and **87***d*, and an oil passage **87***j* interposed between kidney port **87***e* and port **87***g*. Oil passage **87***c* is extended at one axial end thereof toward outer surface **87**C so as to be connected to kidney port **87***b*, and is extended at the other axial end thereof toward outer surface **87**D so as to be connected to kidney port **87***d*. Oil passage **87***c* is parallel to oil passages **87***h* and **87***j* and is perpendicular to ports **87***f* and **87***g*. In this way, center section **87** is formed therein with a part of the closed circuit of HST **80**, including the pair of lines L**1** and L**2** for circulating oil between the delivery port of hydraulic pump **81** and the supply port of hydraulic motor **82** and between the delivery port of hydraulic motor **82** and the supply port of hydraulic pump **81**. Oil passage **87***c* interposed between kidney ports **87***b* and **87***d* serves as an entirety of line L**1**. Oil passages **87***h* and **87***j* and ports **87***f* and **87***g* together serve as a part of line L**2** to be interposed between kidney ports **87***a* and **87***e*. Line L**2** is completed by connecting the connection means (including drive mode switching valve **89**) to ports **87***f* and **87***g*.

In center section **87** between kidney ports **87***a* and **87***b* and outer surface **87**D is also bored a charge oil passage **87***k* which can communicate with oil passages **87***h* and **87***c*. A pair of check valves **99** are interposed between oil passage **87***c* (at kidney port **87***b*) and charge oil passage **87***k*, and between oil passage **87***h* (at kidney port **87***a*) and charge oil passage **87***k*, respectively. Charge oil passage **87***k* is supplied with oil from charge pump **16**, as shown in FIG. **1**. Each of check valves **99** is opened to pass oil from charge oil passage **87***k* into corre-

sponding oil passage **87***h* or **87***c* when corresponding oil passage **87***h* or **87***c* is hydraulically depressed.

HST casing **80***a* also incorporates a PTO shaft **85** disposed in parallel to pump shaft **81***a* and motor shaft **82***a*. PTO shaft **85** projects outward from HST casing **80***a* adjacent to center section **87**. In HST casing **80***a*, a PTO clutch **85***a* and a PTO brake **85***b* are provided on PTO shaft **85**. PTO clutch **85***a* has a clutch input gear **86***b* relatively rotatably provided on PTO shaft **85**. A gear **86***a* is fixed on pump shaft **81***a* and meshes with gear **86***b* so as to transmit the power of engine **4** to PTO shaft **85** through PTO clutch **85***a*.

Motor shaft **82***a* is extended from outer surface **87**B of center section **87** into differential gear casing **90**R opposite to hydraulic motor **82** so as to be fixedly provided on its end with a bevel motor gear **82***c*. Differential gear casing **90**R incorporates a differential gear unit **84** differentially connecting axles **83**L and **83**R to each other. Unsteerable wheels **92**L and **92**R are fixed onto outer ends of respective axles **82**L and **82**R. A deceleration gear train including large and small gears **93***a* and **93***b* is interposed between motor shaft **82***a* and differential gear unit **84**. A deceleration gear shaft **93** is disposed in parallel to axles **83**L and **83**R. Large bevel gear **93***a* is fixed on deceleration gear shaft **93** and meshes with bevel motor gear **82***c*. Small bevel gear **93***b* is formed on deceleration gear shaft **93** and meshes with a bull gear **84***a* of differential gear unit **84**.

Differential gear casing **90**R has a large opening open at one of left and right sides (in this embodiment, the left side) thereof, and casing cover **90**L is attached to differential gear casing **90**R so as to cover the large opening, thereby supporting deceleration gear shaft **93** and differential gear unit **84**. By removing casing cover **90**L from differential gear casing **90**R, the large opening of differential gear casing **90**R is exposed so as to facilitate disassembly of differential gear unit **84** and deceleration gear shaft **93** with the deceleration gears. An axle casing **11**L incorporating axle **83**L is fixed at its proximate end to casing cover **90**L, and an axle casing **11**R incorporating axle **83**R to differential gear casing **90**R. The interior space of the joint portion of left axle casing **11**L and casing cover **90**L serves as a left brake chamber **27**L for incorporating a left brake **5**L for braking left axle **83**L, and the interior space of the joint portion of right axle casing **11**R and differential gear casing **90**R serves as a right brake chamber **27**R for incorporating a right brake **5**R for braking right axle **83**R, so that left and right brakes **5**L and **5**R are disposed symmetrically.

With respect left brake **5**L in brake chamber **27**L between axle casing **11**L and casing cover **90**L, brake pads **8**L fitted to axle casing **11**L and brake disks **9**L fitted on axle **83**L are alternately aligned in the proximal portion of axle casing **11**L, and a pressure ring **7**L disposed around axle **83**L is fitted to casing cover **90**L so as to confront brake disks **9**L and pads **8**L. A brake shaft **3**L is rotatably supported by axle casing **11**L and casing cover **90**L, and a brake arm **12**L is fixed on the outer end of brake shaft **3**L. Brake shaft **3**L is partly formed into a cam **3***a* confronting a part of pressure ring **7**L. By rotating brake arm **12**L for braking, cam **3***a* acts to move pressure ring **7**L so as to press brake disks **9**L and pads **8**L against one another, thereby braking axle **83**L. Similar to left brake **5**L, right brake **5**R in brake chamber **27**R between differential gear casing **90**R and axle casing **11**R includes brake pads **8**R, brake disks **9**R, pressure ring **7**R, a brake shaft **3**R with a cam **3***a*, and a brake arm **12**R. A parking brake manipulator is operatively connected to both brake arms **12**L and **12**R so as to brake axles **83**L and **83**R simultaneously.

An alternative four-wheel driving vehicle **100**A shown in FIG. **13** will be described. The same parts and members as those of FIG. **1** are designated by the same reference numerals of FIG. **1**, and so description of them will be omitted.

Vehicle **100**A is equipped with a steering transaxle **1**A and an unsteering transaxle **10**A distributed before and behind. Steering transaxle **1**A and unsteering transaxle **10**A incorporate respective mechanical (multi-speed stage) auxiliary transmissions **19** and **95**, which are operatively connected to an auxiliary speed control lever **17**.

In steering transaxle **1**A, an alternative motor supply cover **31**A supports hydraulic motor **30** and mechanical auxiliary transmission **19** driven by hydraulic motor **30** so as to constitute an assembly unit to be detachably attached to transaxle casing **21**. When the assembly unit is attached to transaxle casing **21**, motor supply cover **31**A is disposed to cover the opening (such as opening **21***d* or **21***d'*) of transaxle casing **21** so as to drivingly connect mechanical auxiliary transmission **19** to differential gear unit **25** in transaxle casing **21** through the opening of transaxle casing **21**. In this way, in steering transaxle **1**, mechanical auxiliary transmission **19** is drivingly interposed between hydraulic motor **30** and differential gear unit **25**.

In unsteering transaxle **10**A, mechanical auxiliary transmission **95** is drivingly interposed between motor shaft **82***a* of hydraulic motor **82** and deceleration gear shaft **93**. Alternatively, it may be drivingly interposed between deceleration gear shaft **93** and differential gear unit **84**.

An alternative four-wheel driving vehicle **100**B shown in FIGS. **14**, **15** and **16** will be described. FIGS. **14**, **15** and **16** illustrate the same parts and members as those of FIGS. **1**, **2** and **11**, which are designated by the same reference numerals of FIGS. **1**, **2** and **11**, and so description of the parts and members will be omitted. Further, FIGS. **3**, **6** and **12** are applied for description of vehicle **100**B.

The important distinctive point of vehicle **100**B compared with vehicle **100** is that an alternative steering transaxle **1** incorporates a fixed displacement hydraulic motor **230**, and an HST **280** in an unsteering transaxle **10**B includes a variable displacement hydraulic motor **282** fluidly connected to hydraulic pump **81**. In this regard, hydraulic motor **230** has a fixed swash plate **231***c* and axial motor shaft **33** in parallel to drive shafts **24**L and **24**R as shown in FIG. **15**, and hydraulic motor **282** has a movable swash plate **282***b* and axial motor shaft **82***a* as shown in FIG. **16**.

With respect to steering transaxle **1**B having fixed displacement hydraulic motor **230**, a motor support cover **231** supporting hydraulic motor **230** is slimmed in comparison with motor support cover **31** shown in FIG. **2** because hydraulic motor **230** needs no mechanism for controlling the slant angle of swash plate **231***c*. A motor shaft support portion **231***a* formed of motor support cover **231** and a motor shaft support block **231***b* fixed to motor support cover **231** journal respective ends of motor shaft **33** of hydraulic motor **230**. Center section **32** formed of motor support cover **231** between motor shaft support portion **231***a* and motor shaft support block **231***b* passes motor shaft **33** therethrough and fits cylinder block **34** through valve plate **36** so as to constitute hydraulic motor **230**, similar to that of FIG. **2**. Hydraulic motor **230** is disposed between center section **32** and fixed swash plate **231***c* on motor shaft support block **231***b*, and motor gear **33***c* meshing with bull gear **25***b* of differential gear unit **25** is fixed on motor shaft **33** between motor support portion **231***a* and center section **32**.

As shown in FIG. **14**, a motor control unit **29** is provided for movable swash plate **282***b* of hydraulic motor **282** for reducing the rotary speed of unsteerable wheels **92**L and **92**R to balance with the rotary speed of steerable wheels **22**L and **22**R during turning of vehicle **100**B. A link rod **44**A is opera-

tively interposed between steering wheel **14** and one of axle supply units **23**L and **23**R so as to steer axle supply units **23**L and **23**R according to rotation of steering wheel **14**. Link rod **44**A is also operatively connected to motor control unit **29** so as to change the slant angle of swash plate **282** according to the steered angle of axle supply units **23**L and **23**R. Instead of link rod **44**A connected to one of axle supply units **23**L and **23**R, motor control unit **29** may be operatively connected to any active portion of the linkage from steering wheel **14** to each of steerable wheels **22**L and **22**R.

When vehicle **100**B travels straight, movable swash plate **282***b* is disposed at the minimum slant angle for defining the minimum displacement of hydraulic motor **282**. During turning of vehicle **100**B, the slant angle of movable swash plate **282***b* is increased to increase the displacement of hydraulic motor **282**, thereby decelerating unsteerable wheels **92**L and **92**R.

Referring to FIG. **17**, in an alternative vehicle **100**C having fixed displacement hydraulic motor **230** and variable displacement hydraulic motor **282**, left and right brakes **5**L and **5**R for braking respective axles **83**L and **83**R are operated individually, thereby enabling brake-turn of vehicle **100**C. In this regard, left and right brake pedals **59**L and **59**R are interlockingly connected to respective brake arms **12**L and **12**R.

The slant angle of movable swash plate **282***b* of hydraulic motor **282** is controlled by actuation of a servo actuator **18**. Vehicle **100**C is equipped with a controller **19** from which a communication line **45** is extended to servo actuator **18**. The angle of link rod **44**A operatively interposed between steering wheel **14** and one of axle support units **23**L and **23**R is detected by a potentiometer, and its detection signal is inputted to controller **19**. Controller **19** outputs a command signal to servo actuator **18** according the detection signal about the angle of link rod **44**A. Alternatively, any active portion of the linkage from steering wheel **14** to each of steerable wheels **22**L and **22**R may serve as a detection target for controlling servo actuator **18**.

Brake pedals **59**L and **59**R and an accelerator pedal **58** are provided with respective potentiometers electrically connected to controller **19**. Due to the setting of controller **19** for controlling servo actuator **18**, when steering wheel **14** is fully rotated and neither brake pedal **59**L nor **59**R is depressed, the periphery speed of steerable wheels **22**L and **22**R becomes about 1.5 to 1.7 times as large as that of unsteerable wheels **92**L and **92**R. If steering wheel **14** is fully rotated and one of brake pedals **59**L and **59**R is depressed, the slant angle of swash plate **282***b* is further increased to reduce the rotary speed of unsteerable wheels **92**L and **92**R so that the periphery speed of steerable wheels **22**L and **22**R becomes about twice as large as that of unsteerable wheels **92**L and **92**R. Therefore, reduction of depression of accelerator pedal **58** is unnecessary for brake-turn of vehicle **100**C. The deceleration rate of unsteerable wheels **92**L and **92**R by controlling of servo actuator **18** for brake-turn of vehicle **100**C may be inversely proportional to the traveling speed of vehicle **100**C. Further, vehicle **100**C includes an adjusting dial **17** for setting the actuation speed of servo actuator **18**. For example, adjusting dial **17** may be rotatable among low, medium and high speed positions.

FIG. **18** illustrates transaxle casing **21** with an alternative motor support cover **271** incorporating an alternative fixed displacement hydraulic motor **230**A, in comparison with FIG. **8**. Hydraulic motor **230**A has motor shaft **73**, which is perpendicular to drive shafts **24**L and **24**R. An open end of motor support cover **271** toward transaxle casing **21** is fixed to center section **72** so as to form a motor chamber **271***c* enclosed by motor support cover **271** and center section **71**. Hydraulic motor **230**A with a fixed swash plate **271***d* and a retainer **271***b* holding fixed swash plate **271***d* is supported between center section **72** and motor support cover **271** in motor chamber **271***c*. Other part and members designated by the same reference numerals of FIG. **8** are identical with those of FIG. **8**, and so description of them is omitted.

In comparison with motor support cover **71** of FIG. **8**, motor support cover **271** of FIG. **18** is slimmed because it supports fixed displacement hydraulic motor **230**A and no mechanism for controlling the slant angle of swash plate **271***d*.

An alternative vehicle **100**D shown in FIG. **19** includes variable displacement hydraulic motor **30** for driving steerable wheels **22**L and **22**R and variable displacement hydraulic motor **282** for driving unsteerable wheels **92**L and **92**R. A servo actuator **18**A for controlling movable swash plate **35** of hydraulic motor **30** is connected to controller **19** through a communication line **45**A, and a servo actuator **10**B for controlling movable swash plate **282***b* of hydraulic motor **282** is connected to controller **19** through a communication line **45**B.

Controller **19** controls servo actuator **18**A and **18**B based on the detection of the angle of link rod **44**A (or the detection of movement of any active portion of the linkage from steering wheel **14** to each of steerable wheels **22**L and **22**R) so that the periphery speed of steerable wheels **22**L and **22**R is balanced with that of unsteerable wheels **92**L and **92**R during turning of vehicle **100**D. Further, controller **19** controls servo actuator **18**A and **18**B based on the detection of depression of brake pedals **59**L and **59**R as well as the detection of the angle of link rod **44**A so that the periphery speed of steerable wheels **22**L and **22**R is balanced with that of unsteerable wheels **92**L and **92**R during the brake-turn of vehicle **100**D.

Referring to FIG. **20**, an example of control pattern of movable swash plates **35** and **282***b* will be described. While vehicle **100**D travels straight, slant angles D**2** of swash plates **35** and **282***b* are kept in constant. As steering wheel **14** is rotated for turning, the slant angle of swash plate **35** is reduced from angle D**2** so as to accelerate steerable wheels **22**L and **22**R while angle D**2** of swash plate **282***b* is kept. When steering wheel **14** is fully rotated without depression of brake pedals **59**L and **59**R, the reduced slant angle of swash plate **35** reaches minimum angle D**1** so that the periphery speed of steerable wheels **22**L and **22**R becomes about 1.5 to 1.7 times as large as that of unsteerable wheels **92**L and **92**R, for example. As one of brake pedals **59**L and **59**R is depressed during the full rotation of steering wheel **14**, the slant angle of swash plate **282***b* is increased from angle D**2** so as to decelerate unsteerable wheels **92**L and **92**R while minimum angle D**1** of swash plate **35** is kept. When the one of brake pedals **59**L and **59**R is fully depressed, the increased slant angle of swash plate **282***b* reaches maximum angle D**3** so that the periphery speed of steerable wheels **22**L and **22**R becomes about twice as large as that of unsteerable wheels **92**L and **92**R, for example.

In comparison with the control of movable swash plate **35** of hydraulic motor **30** in vehicle **100** as shown in FIG. **1** and with the control of movable swash plate **282***b* of hydraulic motor **282** in vehicle **100**B or **100**C as shown in FIG. **14** or **17**, the movement of each of movable swash plates **35** and **282***b* in vehicle **100**D can be reduced because of cooperation of movable swash plates **35** and **282***b*.

Further, vehicle **100**D shown in FIG. **19** is equipped with steering transaxle **1** (shown also in FIG. **1**) and an alternative unsteering transaxle **10**C. Unsteering transaxle **10**C is provided with HST **280** including hydraulic pump **81** and motor **282**, and incorporates a mechanical auxiliary transmission **95***a* including deceleration gear shaft **93** and a clutch shaft **98**. On deceleration gear shaft **93** are fixed bevel gear **93***a* meshing with bevel motor gear **82***c* fixed on motor shaft **82***a*, a small low-speed gear **93***c* and a large high-speed gear **93***d*.

Clutch shaft **98** is disposed in parallel to deceleration gear shaft **93**. A large low-speed clutch gear **98***b* and a small high-speed clutch gear **98***c* are fixed together on a slider **98***a* slidably fitted on clutch shaft **98**. One of clutch gears **98***b* and **98***c* selectively mesh with corresponding gear **93***c* or **93***d*. When clutch gear **98***b* meshes with gear **93***c*, auxiliary transmission **95***a* is set at a low speed stage. When clutch gear **98***c* meshes with gear **93***d*, auxiliary transmission **95***a* is set at a high speed stage. A gear **98***d* is fixed on clutch shaft **98** and meshes with bull gear **84***a* of differential gear unit **84**.

In vehicle **100**D of FIG. **19**, other parts and members designated by the same reference numerals of FIGS. **1**, **14** and **17** are identical with those of vehicles **100**, **100**B and **100**C, and so description of them is omitted.

What is claimed is:

**1**. A fluid passage member comprising:

a pump mounting surface onto which a hydraulic pump having a rotary axis is mounted;

first and second kidney ports opened at the pump mounting surface;

a first fluid extraction port outwardly opened and connected to the first kidney port;

a motor mounting surface onto which a hydraulic motor having a rotary axis is mounted such that the rotary axis of the hydraulic motor is parallel to the rotary axis of the hydraulic pump;

third and fourth kidney ports opened at the motor mounting surface;

a second fluid extraction port outwardly opened and connected to the third kidney port; and

a fluid passage interposed between the second and fourth kidney ports, the fluid passage extending from the second kidney port to the fourth kidney port so as to fluidly connect the second and fourth kidney ports together, wherein the first kidney port and the first fluid extraction port are separated from the third kidney port and the second fluid extraction port, wherein the first and second fluid extraction ports are adapted to be fluidly connected via piping to a second hydraulic motor which is not mounted on the motor mounting surface of the fluid passage member, wherein a pair of fluid lines extend between the hydraulic pump mounted on the pump mounting surface and the hydraulic motor mounted on the motor mounting surface, wherein the second and fourth kidney ports and the fluid passage in the fluid passage member serve as an entirety of one of the fluid lines, wherein the first and third kidney ports and the first and second extraction ports in the fluid passage member serve as a part of the other of the fluid lines, and wherein the other of the fluid lines is completed with the piping and the second hydraulic motor.

**2**. The fluid passage member according to claim **1**, wherein a switching valve is disposed on the piping to be interposed between the first and second fluid extraction ports and the second hydraulic motor.

**3**. The fluid passage member according to claim **1**, wherein the outward openings of the first and second fluid extraction ports are disposed in the same direction.

**4**. A fluid passage member comprising:

a pump mounting surface onto which a hydraulic pump having a rotary axis is mounted;

first and second kidney ports opened at the pump mounting surface;

a first fluid extraction port outwardly opened and connected to the first kidney port;

a motor mounting surface onto which a hydraulic motor having a rotary axis is mounted such that the rotary axis of the hydraulic motor is parallel to the rotary axis of the hydraulic pump;

third and fourth kidney ports opened at the motor mounting surface;

a second fluid extraction port outwardly opened and connected to the third kidney port;

a fluid passage interposed between the second and fourth kidney ports, the fluid passage extending from the second kidney port to the fourth kidney port so as to fluidly connect the second and fourth kidney ports together, wherein the first kidney port and the first fluid extraction port are separated from the third, kidney port and the second fluid extraction port;

a first outer surface on which the pump mounting surface and the motor mounting surface are formed;

a second outer surface defining one end of the first outer surface closer to the pump mounting surface than the motor mounting surface;

a third outer surface defining another end of the first outer surface opposite to the second outer surface closer to the motor mounting surface rather than the pump mounting surface; and

a fourth outer surface defining another end of the first outer surface between the second and third outer surfaces, wherein the first and second extraction ports are outwardly opened at the fourth outer surface.

**5**. The fluid passage member according to claim **4**, wherein the fluid passage interposed between the second and fourth kidney ports is a first fluid passage extended parallel to the first outer surface and perpendicular to the second and third outer surfaces, the fluid passage member further comprising:

a second fluid passage extended parallel to the first fluid passage so as to connect the first kidney port to the first fluid extraction port; and

a third fluid passage extended parallel to the first fluid passage so as to connect the third kidney port to the second fluid extraction port, and to be separated from the second fluid passage.

**6**. The fluid passage member according to claim **5**, further comprising:

a pair of charge check valves disposed in the respective first and second fluid passages.

**7**. The fluid passage member according to claim **4**, wherein the first outer surface is adapted to have a casing fitted thereto, and wherein the casing incorporates the hydraulic pump and motor mounted on the respective pump and motor mounting surfaces in the first outer surface.

**8**. The fluid passage member according to claim **4**, further comprising:

a fifth outer surface disposed opposite to the first outer surface in the rotary axial directions of the hydraulic pump and motor, wherein the fifth outer surface is adapted to have a charge pump fitted thereto so as to be driven by the hydraulic pump.

**9**. The fluid passage member according to claim **4**, further comprising:

a fifth outer surface disposed opposite to the first outer surface in the rotary axial directions of the hydraulic pump and motor, wherein the fifth outer surface is adapted to have a casing fitted thereto, and wherein the casing supports an axle and incorporates a drive train which is driven by the hydraulic motor to drive the axle.

* * * * *