United States Patent [19]

Bauer

[11] **4,074,782**

[45] **Feb. 21, 1978**

[54] **HYDRAULIC SYSTEM OF A SKID STEER LOADER**

[75] Inventor: **James J. Bauer,** Lisbon, N. Dak.

[73] Assignee: **Clark Equipment Company,** Buchanan, Mich.

[21] Appl. No.: **654,259**

[22] Filed: **Feb. 2, 1976**

[51] **Int. Cl.**[2] **B62D 11/04**

[52] **U.S. Cl.** **180/6.48;** 60/455; 91/486

[58] **Field of Search** 180/6.48; 91/486, 487, 91/488; 60/455, 486; 418/210, 212

[56] **References Cited**

U.S. PATENT DOCUMENTS

D. 224,588	8/1972	Bauer	D12/57
D. 231,482	8/1974	Bauer	D6/95
3,066,609	12/1962	Hann	91/488
3,177,666	4/1965	Reinke	60/455
3,635,365	1/1972	Bauer	214/778
3,895,728	7/1975	Heggen	214/140
3,903,978	9/1975	Kraus	180/6.48

Primary Examiner—Joseph F. Peters, Jr.
Assistant Examiner—John A. Pekar
Attorney, Agent, or Firm—Harry G. Thibault

[57] **ABSTRACT**

A skid steer loader comprising an improved loader main frame and including an operator's compartment designed to present a low profile vehicle particularly suitable for low clearance applications. A improved hydraulic system for the vehicle includes a new arrangement of an implement pump interconnected with the hydraulic drive pumps of the steering system of the vehicle. An internal connection between the drive pumps and the implement pump substantially improves the flow of hydraulic fluid through the system by providing an internal passage for flow of excess hydraulic fluid from a drive pump to the implement pump to supply the implement pump with inlet fluid.

1 Claim, 8 Drawing Figures

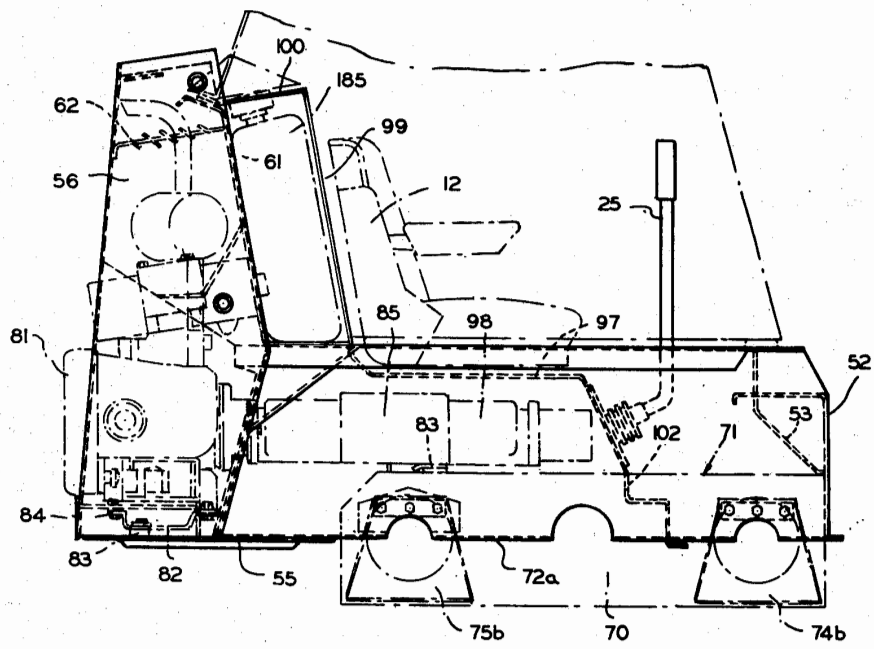

FIG. 1

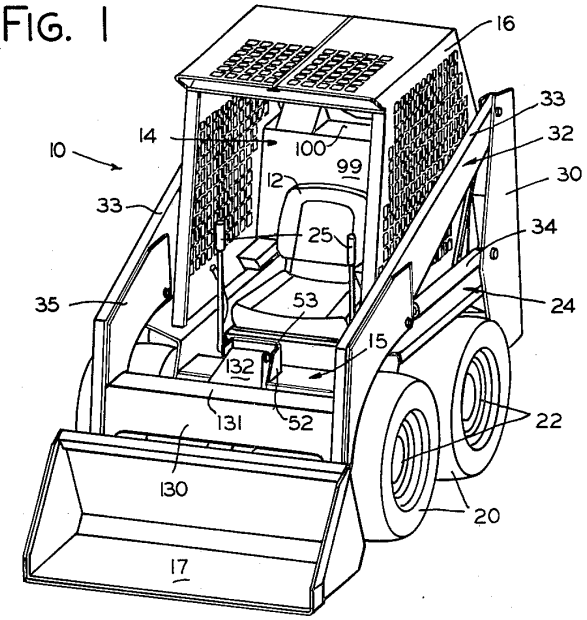
16
33
32
30
34
24
22
20
10
14
100
99
12
25
53
15
132
131
52
130
17
35

FIG. 2

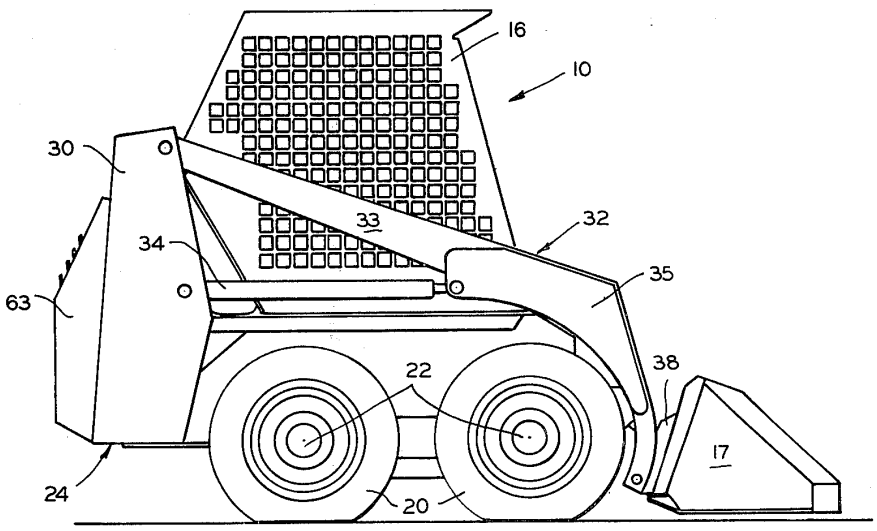
16
10
30
33
32
34
35
63
38
22
17
24
20

FIG. 3

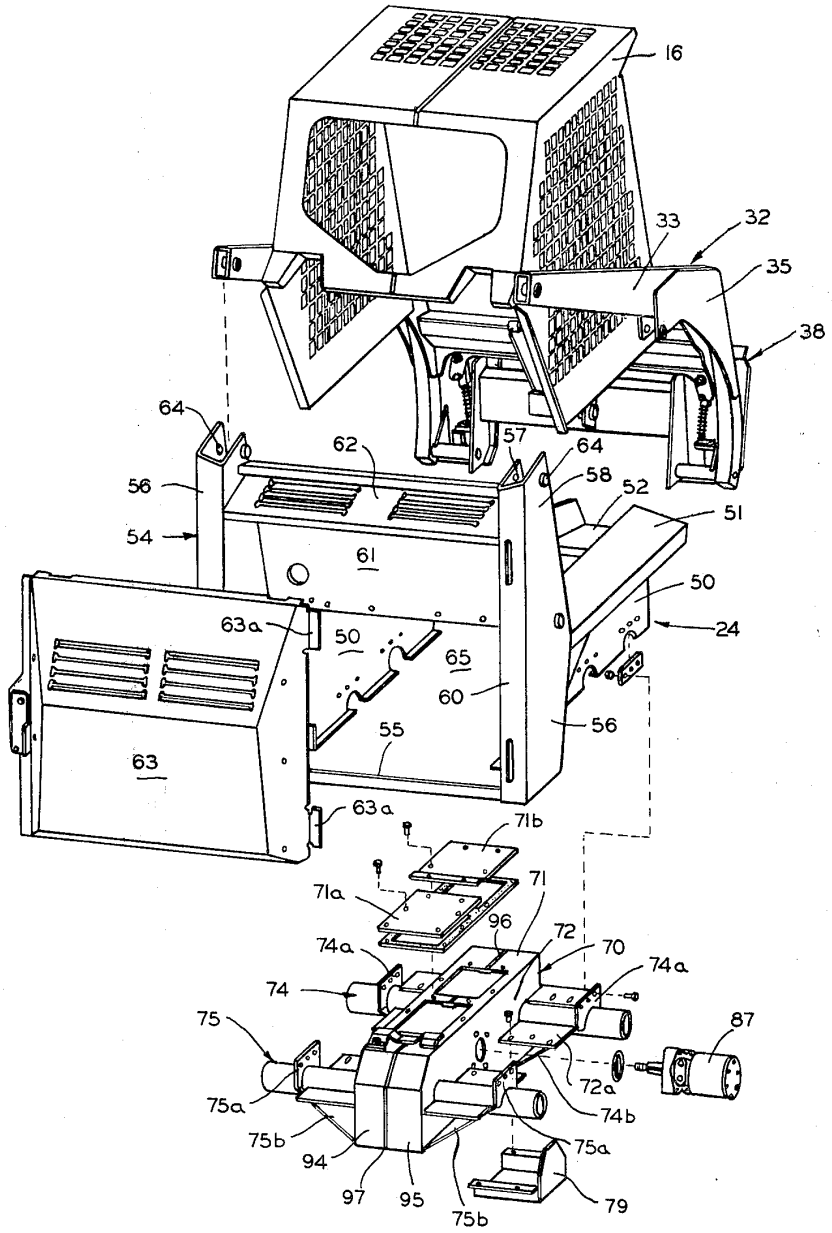
16
33
32
35
38
64
62
57
64
58
52
51
56
54
61
50
24
63a
50
65
60
56
55
63
63a
71b
71
71a
96
72
70
74a
74a
74
75
87
72a
75a
74b
75b
75a
94
97
95
75b
79

FIG. 4

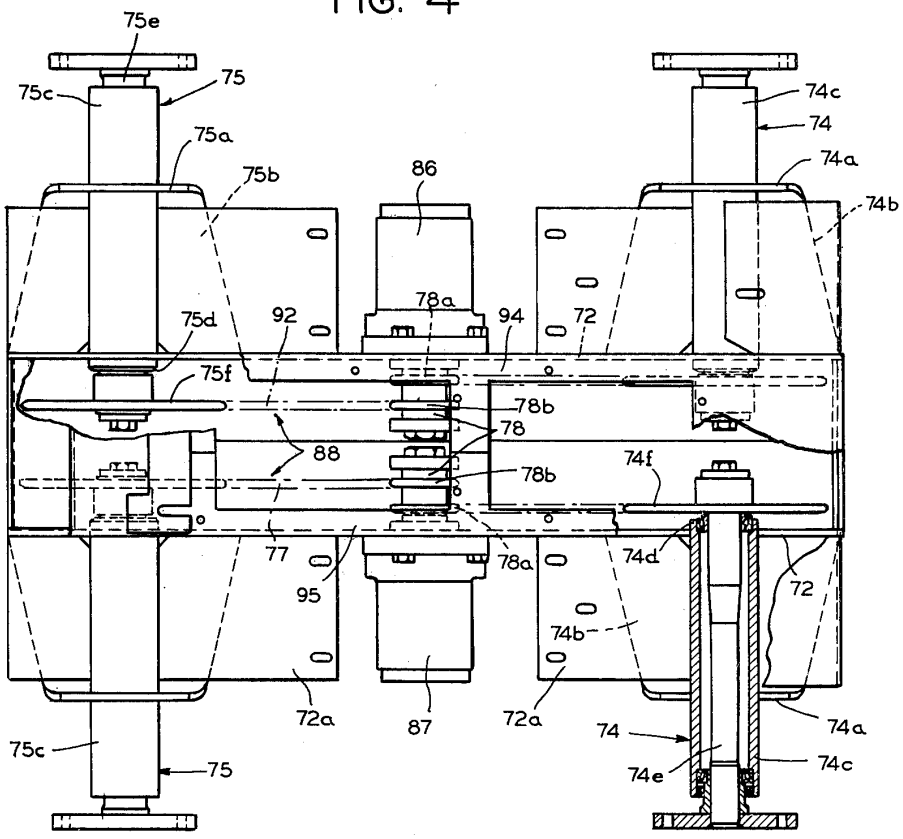
75e
75
75c
75a
75b
86
74c
74
74a
74b
78a
94
72
75d
92
75f
78b
78
88
74f
78b
77
78a
74d
72
95
74b
72a
87
72a
74
74a
75c
75
74e
74c

FIG. 5

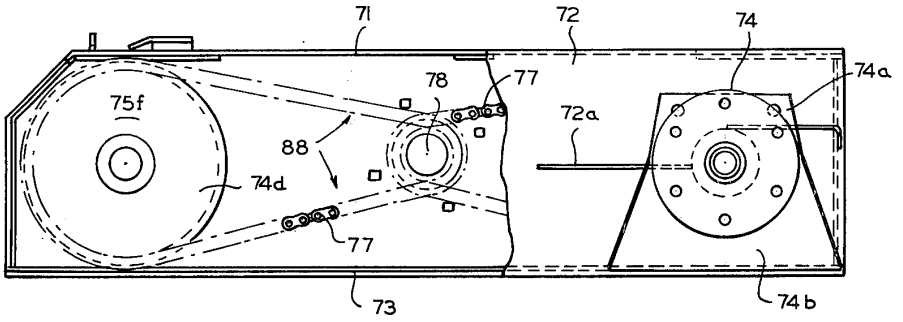
71
72
74
74a
78
77
75f
72a
88
74d
77
73
74b

FIG. 6

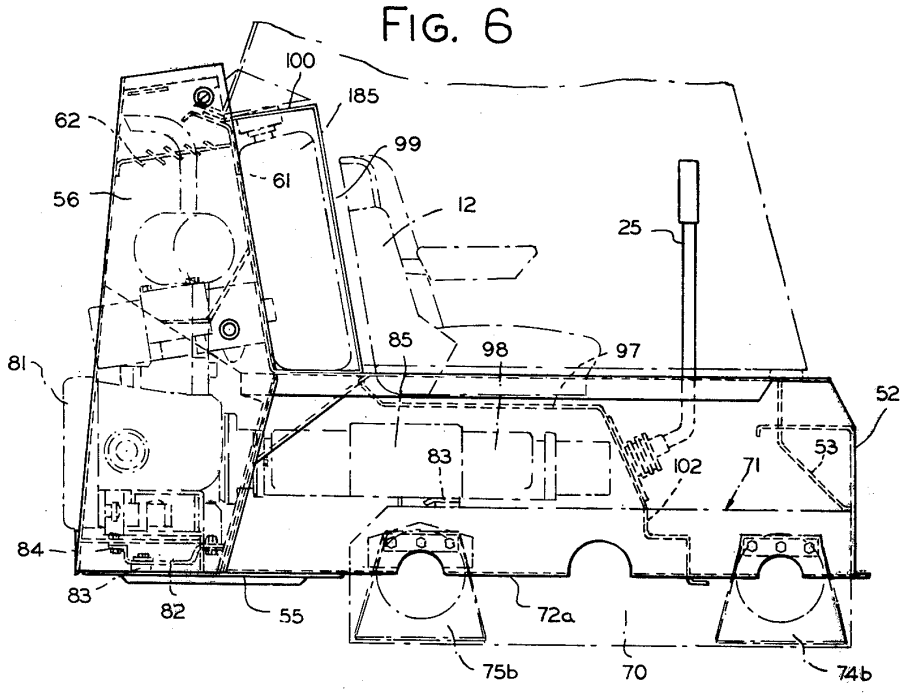
100
185
62
99
61
56
12
25
85
98
97
81
52
83
102
53
71
84
83
82
55
72a
75b
70
74b

FIG. 7

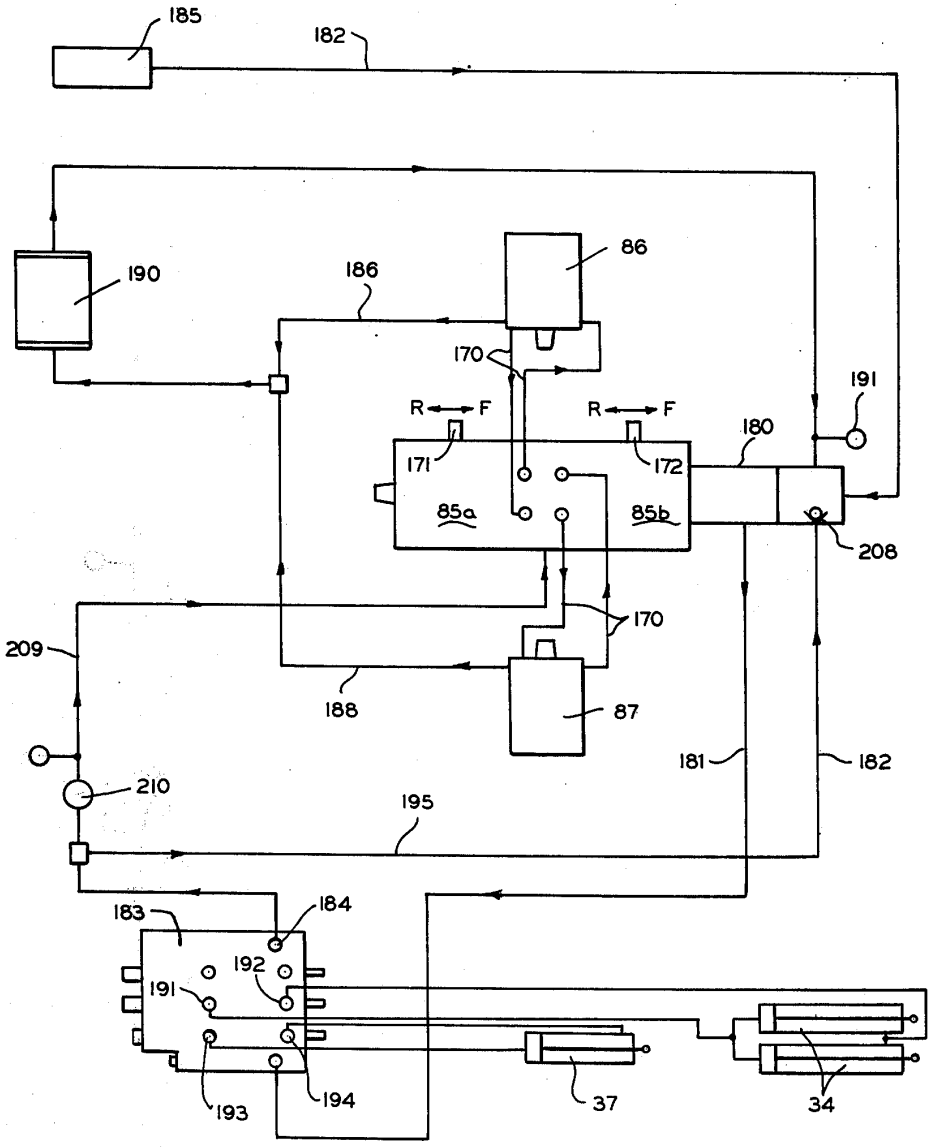
185
182
190
186
86
170
R ⟷ F
R ⟷ F
171
172
180
191
85a
85b
208
170
209
188
87
181
182
210
195
183
184
192
191
193
194
37
34

FIG. 8

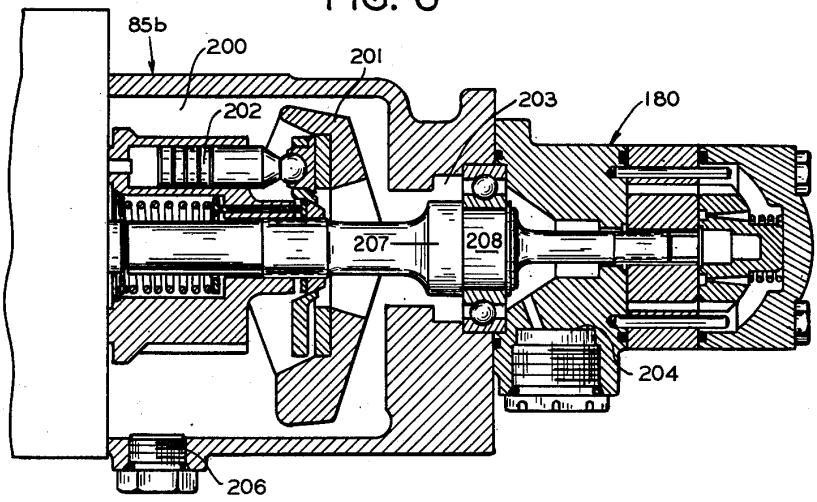

HYDRAULIC SYSTEM OF A SKID STEER LOADER

FIELD OF THE INVENTION

This invention pertains to the art of skid steer loaders and more particularly to an improvement in the hydraulic system of an improved loader adapted to provide an improved operator's module and to incorporate a low profile particularly suitable for low clearance applications.

BACKGROUND OF THE INVENTION

Skid steer loaders are vehicles possessing a high degree of maneuverability which are propelled and maneuvered by driving the wheels on one side of the vehicle at a different speed and/or in a different direction from those on the other side of the vehicle so as to achieve a turning motion. In the case where the wheels on one side are driven forwardly and those on the opposite side reversely, the loader will turn on its axis or, in other words, spin in its tracks. However, the operator's compartment of such vehicles are typically constricted, with the operator surrounded by the working elements of his machine and buffeted by engine and transmission noise.

Typically, the skid steer loader's high levels of maneuverability are put to best use in operations wherein the loader's steering abilities easily enable it to negotiate around obstacles such as struts, columns and supports encountered in an enclosed environment and used to support the structure in which the loader is working. However, in many instances, particularly in agricultural applications, the requirements of the job include a necessity for a machine which has the ability to work under conditions of low clearance as well as conditions requiring high maneuverability. Such low clearance applications requiring a low profile vehicle suggest a further encroachment of the operator's space. Further, the necessity of providing a protective enclosure for the machine operator has heretofore limited the low clearance capability of such skid steer loaders. Heretofore low vehicle clearance has been achieved only at a sacrifice in load capability and power, and with additional encroachment on the operator's compartment.

DESCRIPTION OF THE PRIOR ART

The prior art vehicles generally present an upright box-like structure of uniform body width wherein all structural members are located inside the inner face of the wheels mounted on the vehicle. A skid steered loader having such a body construction and employing a hydrostatic drive comprising two independent variable speed transmissions, one mounted on each side for driving their respective sets of wheels, is disclosed in U.S. Pat. No. 3,635,365 entitled "Tractor Vehicle with Hydrostatic Drive Means" by James J. Bauer which issued Jan. 18, 1972 to the assignee of the present invention. The design of that vehicle is also the subject of U.S. Pat. No. Des. 224,588 entitled "Self-Propelled Loader Vehicle" by the same inventor, issued Aug. 8, 1972 also assigned to the assignee of the present invention.

Efforts to improve the mobility of a skid steer loader vehicle also involved body design. For example, it is known that a skid steer loader should preferably have a wheel base shorter than the center-to-center distance between the wheels on opposite sides of the loader to

reduce tire wear and resistance to skid turns. Further, proper weight distribution in a skid steer vehicle improves mobility. Thus the engine is located in the rear and partially counterweights the loader bucket in front. An earlier attempt to change the body design of the vehicle is disclosed in U.S. Pat. No. 3,895,728 entitled "Tractor Vehicle Having Material Handling Subframe" by John P. Heggen which issued July 22, 1975 to the assignee od the present invention. Although the frame described in the above patent was designed to isolate the loader and skid steering forces of the vehicle from the drive components, no consideration was given to improving the operator's compartment of such vehicle or designing such frame for low clearance applications.

An early effort to change the profile of the skid steer loader is shown in U.S. Pat. No. Des. 231,482, entitled "Self-Propelled Loader Vehicle" by James J. Bauer, issued Apr. 23, 1974, and assigned to the assignee of the present invention. This latter vehicle represents a scaled down version of a larger vehicle with some design modifications. The rear loader uprights and the boom arms project outwardly from the side frames to overlie the wheels of the vehicle, but an offset knee must be provided at the front end of the boom arms to accommodate power cylinders mounted on each loader arm for operating the loading bucket. Further, the operator enclosure becomes a fairly narrow, high enclosure, severely restricting side-to-side movement of the operator. Further, the load carrying capacity of such vehicle is severely limited since it remains primarily a scaled down version of a larger model.

The present invention represents a substantial innovative advance over the prior art in that a vehicle having a mid-range operating capacity (800 lbs. load capability) presents a wider and lower profile specially suited for low clearance, agricultural applications with little sacrifice in operating capacity, and substantial increase in operator compartment space.

Further substantial innovative advances have been made to accomplish the low profile of the present vehicle without sacrificing any substantial operating capacity and with marked improvement in operator comfort as summarized below.

SUMMARY OF THE INVENTION

The present invention comprises an improved main frame for a skid steer loader vehicle, the main frame comprising a center compartment partially defined by a pair of longitudinally extending, laterally spaced side beams. At the rear of the center compartment the main frame integrates a number of structural elements therefor to provide an acoustic enclosure for the engine for dissipating engine noises. Operator comfort is enhanced by substantially reduced noise levels for the loader in the operative mode. The improved acoustic enclosure for the engine reduces noise levels substantially, making the improved loader one of the quietest in the industry.

A cross plate is welded between the longitudinally extending laterally spaced side beams at respective rear bottom portions to form a partial floor at the rear of the main frame. A front wall having an inwardly turned top flange is secured between the side beams at respective front portions thereof. A transmission case presenting an elongated, substantially narrow, profile is mounted at a forward end of the side beams to form a partial floor at the front of the main frame for a center compartment of the main frame. Skid steering forces as well as the normal loader forces are largely isolated from the drive

components associated with and contained in the case. The interior compartment formed receives the engine at a rear portion thereof. The main frame substantially surrounds the center compartment in laterally spaced relation.

Protruding from the case at respective front and rear ends thereof are the stub axles for the vehicle. Brackets mounted on the stub axles secure the case to the side beams of the main frame. Housed within the transmission case is the chain and sprocket drive for each set of wheels for the vehicle. Bolted to the outside of the transmission case are a pair of hydraulic motors which drive their respective set of wheels through the chain and sprocket drive contained within the transmission case. The transmission case is oil filled to lubricate the drive for the vehicle. The mounting of the drive motors on the outside of the case permits a relatively long, narrow configuration for the case enabling a re-design of the operator's compartment which substantially increases the amount of leg room in the operator's space by permitting the operator to straddle the transmission case.

The engine is rubber mounted on the bottom cross plate provided at the rear of the center compartment. Suitably secured to the engine are dual axially aligned variable displacement pumps which drive the motors mounted on the transmission case.

Disposed at one end of the drive pumps in axial alignment therewith is an implement pump interconnected with the drive pumps. An internal connection between the drive pumps and the implement pump substantially improves the flow of hydraulic fluid throughout the system. Mounted between an operator compartment and the engine is a hydraulic reservoir for the pumps.

A pair of uprights are fabricated from plate material and are mounted at the rear of the side beams to structurally support loader arms mounted at upper pivotal mountings on each side. In the preferred embodiment the uprights are disposed outwardly of the main frame to lie behind the wheels mounted on the axles secured to the main frame of the vehicle. With the uprights of the loader vehicle lying behind the wheels of the vehicle, the loader arms, of necessity, must overlie the wheels of the vehicle. Accordingly, the front end of each loader arm has been arcuately proportioned to overlie the front wheels of the vehicle and to receive the outer end of the loader bucket thereon. To achieve this configuration the tilt cylinder for the loading bucket must be mounted inboard of the loader arms and the present invention incorporates a single mid-plane bucket tilt cylinder replacing the two cylinders mounted co-planar with the loader arms in the prior art.

The improved transmission case, as well as the outboard mounted loader arms, provides a wider, lower profile for the operator's compartment and permits a substantial reduction in the height of the overhead guard for the vehicle without reducing overall compartment height and a substantial increase in compartment width.

The advantages recited above, as well as many others, will become more apparent to the reader in the detailed description set forth below when said description is viewed in conjunction with the drawings provided which are described as follows.

DESCRIPTION OF THE DRAWINGS

FIG. **1** is a perspective view of a skid steer loader constructed in accordance with the present invention;

FIG. **2** is a side elevational view of the skid steer loader of FIG. **1**;

FIG. **3** is an exploded perspective view of the main frame of the skid steer loader showing the major structural elements of the vehicle, as viewed from the rear thereof;

FIG. **4** is a top plan view of the transmission case shown at the bottom of FIG. **3**, the case having portions removed for clarity;

FIG. **5** is a side elevational view of FIG. **4**, with portions of the case being removed for clarity;

FIG. **6** is a side elevational view of the main frame of the skid steer loader with certain elements associated with the operator's compartment added for clarity;

FIG. **7** is a schematic of the hydraulic drive system of the skid steer loader; and

FIG. **8** is a partial sectional view of the pump shown in FIG. **7**.

DESCRIPTION OF THE PREFERRED EMBODIMENT

FIGS. **1** and **2** show perspective and side elevational views of a rigid frame, skid steer end loader **10** having the general arrangement of an operator's seat **12** in the middle of the loader with an engine space **14** at the rear and a space **15** at the front for the operator's legs. The operator's compartment area is enclosed by an overhead framework or guard **16** providing protection against objects falling on to the operator from above, such as materials spilling over the rear of a bucket **17** when in a raised position. The overhead guard **16** also serves as a roll-over protective structure. Wheels **20** are mounted on stub axles **22** projecting outwardly from opposite sides of the vehicle body or main frame **24**.

It will be understood by those acquainted with skid steer loaders that the vehicle **10** is propelled through a turning motion by driving the wheels **20** on one side at a different speed and/or direction than those on the other side, causing the vehicle to have great mobility or maneuvering in either the forward or reverse direction. The "steering" is controlled by the operator using a pair of levers **25**, one on each side of the operator's seat **12**, which may be moved independently in a fore and aft direction to cause the wheels **20** on that side of the machine to rotate at a speed and in a direction corresponding to the direction of the lever **25**. For example, both levers **25** may be moved together in either a forward or rearward manner causing the loader to travel straightforward or back up at variable speeds depending on the position of the lever. Or, the operator may move the levers simultaneously but to a greater degree on one side than the other, thus causing the loader to execute a turn. Or, by pushing one lever in one direction and pulling the other in the opposite direction the loader is turned on its axis or spun around virtually in its own tracks.

At the rear is a pair of rear posts or uprights **30** having pivotally mounted at respective upper ends thereof a boom assembly **32**. The uprights **30** are disposed outwardly of the vehicle body **24** and lie behind the wheels **20** provided on either side of the vehicle. A pair of lift arms **33** of the boom assembly **32** overlie the wheels **20** on each side of the vehicle **10** and extend forwardly alongside the operator's compartment and project arcuately downwardly at the front of the machine to overlie the front of the wheels **20**. Mounted at the forward end of the lift arms **33** is the bucket **17**. A boom lift cylinder **34**, one on each side, is pivotally mounted at the rear

end to the upright **30** and the rod end to a pair of laterally spaced gusset plates **35** mounted on the lift arm **33**. A bucket tilt cylinder **37** is suitably mounted between the front ends of the loader arms **33** for pivotal movement at the cylinder end and at the rod end to a bucket mounting attachment **38** which pivotally mounts the bucket **17** to the arms **33** at the point **39**. By means of foot pedals provided in space **15** or auxiliary controls (not shown) associated with the levers **25** the operator is able to control independently the extension and retraction of the lift and tilt cylinders **34, 37** when working with the machine. It will be understood that while an end loader is depicted in the drawings, the machine may be outfitted with various attachments other than the bucket **17**.

Referring now to FIG. **3** main frame **24** of the vehicle **10** includes a pair of longitudinally extending, laterally spaced side beams **50** having outwardly directed upper flanges **51** which overlie the wheels **20** and serve as protective fenders for the vehicle. The side beams **50** are joined at the front by front wall member **52** and at the rear by a post or upright fabrication **54** including a bottom crossmember **55**. The upright fabrication **54** includes a pair of uprights **56**, formed of plate material, wider at the bottom and tapering upwardly toward the top. Each upright **56** comprises a pair of laterally spaced side portions **57** and **58**, joined by a vertically extensive rear portion **60**, the inner side portion **57** abutting the side beam **50**, the side portion **58** spaced outwardly therefrom to provide a channel therebetween. Front crossmember **61** and top crossmember **62** extend between uprights **56** at the front and top thereof and a door **63** extends between uprights **56** at the rear thereof. A pivotal mounting location **64** is provided at the upper end of each upright **56** for each of the lift arms **33** of the boom assembly **32**. The uprights **56** are mounted on the outside of the side beams **50** and are thus disposed outwardly of a center compartment **65** provided in the main frame **24**.

The center compartment **65** of the main frame **24** is largely open and carries a sub-frame or transmission case **70** at a lower front portion thereof, the case **70** having front and rear stub axles **74, 75** mounted thereon, with respective flanges **74*a*, 75*a*** laterally spaced from the case **70** being welded to outer ends of the stub axles **74**. Gusset plates **74*b*, 75*b*** (FIG. **3**) are provided between the flanges **74*a*, 75*a*** and a lower edge of the case **70**. The flanges **74*a*, 75*a*** are used to secure the case **70** to the side walls **50** of the main frame **24**.

The main frame **24** further includes the boom assembly **32** mounted on uprights **56** at pivotal mounting locations **64**. The overhead guard **16** is mounted on flanges **51** of side beams **50** of the main frame **24**.

Referring now to structural elements of the main frame **24**:

Transmission Case

Referring now to FIGS. **3, 4** and **5**, the sub-frame or transmission case **70** comprises top wall **71**, side walls **72** and bottom wall **73**. Front and rear stub axles **74, 75** project from opposite sides of the case **70** adjacent each end. Axle housings **74*c*, 75*c*** are welded to the side walls **72** of the case **70** and open at respective inner ends **74*d*, 75*d*** into the compartment **70**. Stub axle shafts **74*e*, 75*e*** are rotatably journalled in axle housings **74*c*, 75*c*** and carry at their inner ends wheel sprockets **74*f*, 75*f*** which are connected by chains **77** to the drive sprockets of a motor output shaft **78**. In FIG. **3**, it can be seen that the transmission case **70** is divided into halves **94** and **95**, the halves **94** and **95** being welded together along a peripheral seam shown as **96, 97** at top wall **71** and end wall **76** of the transmission case **70**. The front and rear axle housings **74*c*, 75*c*** are welded to the separate halves of the transmission case prior to assembly. The axle housings are then bored prior to assembly and the halves **94, 95** are then welded together. Openings in the top walls **71** provide access to the interior of the case **70** with axle shafts **74*e*, 75*e*** rotatably journalled in the axle housings **74*c*, 75*c*** therethrough. The chain and sprocket drives for the vehicle are then installed in place. Cover plates **71*a*** and **71*b*** are then mounted on the top wall **71** to complete assembly of the case **70**.

The transmission case **70** presents an elongated substantially narrow profile, with side walls **72** laterally displaced from the side beams **50** of the main frame **24** when the case **70** is mounted in place. Lateral flanges **72*a***, having longitudinal edges secured to side walls **72** are mounted on the front and rear stub axles **74, 75** to provide floor plates for the bottom of the operator's compartment **14**, enabling an operator seated in compartment **14** to straddle the case **70**.

The hydraulic drive means for the vehicle **10** comprises first and second variable displacement pumps **85** (FIG. **6**) driven on a common shaft connected to the engine drive shaft. First and second pumps **85*a*, 85*b*** are mounted on an upper surface of top wall **71** of the case **70**. Mounted on respective outer surfaces of opposite side walls **72** of the case **70** are first and second hydraulic motors **86, 87**. The mounting of hydraulic motors **86, 87** is best shown in FIG. **4**. Each hydraulic motor has an output shaft **78** extending into the transmission case which carries at an inner end thereof drive sprockets **78*a*** and **78*b***. The drive sprockets **78*a*** and **78*b*** comprise portions of chain and sprocket drives **88** provided for each set of wheels **20** and carried in the transmission case **70**. Endless chains **77** connect drive sprockets **78*a*, 78*b*** to the wheel sprockets **74*f*, 75*f*** carried on the inner ends **74*d*, 75*d*** of the stub axle shafts **74*e*, 75*e*** of the front and rear stub axles **74, 75**. Drive sprocket **78*a*** lies adjacent the side wall **71** of the transmission case **70**. A first endless chain **77** connects the drive sprocket **78*a*** to the front wheel sprocket **75*f*** carried at the inner end **74*d*** of front axle **74**. Drive sprocket **78*b***, carried at the outer end of the output shaft **78**, is connected by a second endless chain **77** to the wheel sprocket **75*f*** carried at the inner end **75*d*** of rear axle **75**. The relative position of the sprockets **78*a*, 78*b*** balances the moments of force exerted on the output shaft **78** by the drives for the front and rear wheels of the vehicle.

No additional gear reduction means such as those disclosed in U.S. Pat. No. 3,895,728, supra, are required. Hydraulic motors **86, 87** mounted on the outside of the transmission case are of the rolling vane Geroller type which possess inherent gear reduction capability. Any additional gear reduction required is achieved by the difference in the size of the drive sprocket **78** and the wheel sprockets **74*f*, 75*f*** for the chain and sprocket drives **88**. First and second pumps **85*a*, 85*b*** are operatively connected by means of hydraulic hoses to the first and second hydraulic motors **86, 87** mounted on the outside of the transmission case **70**.

It will be appreciated that each of the first and second variable displacement pumps **85*a*** and **85*b*** include a circular array of pistons and cylinders which revolve against swash plates which may be tilted by means of a control linkage to vary the displacement of the pumps

85*a*, 85*b*. The control linkage provided for the variable displacement pumps 85*a*, 85*b* may be like that shown in application Ser. No. 635,559, now Patent No. 4,043,416, entitled "Skid Steered Tractor Vehicle Combined Steering Lever and Auxiliary Control with Self-Centering Mechanism" filed Nov. 26, 1975 and assigned to the assignee of the present invention.

Engine Enclosure

As best seen in FIG. 6, mounted at the rear of the center compartment 65 of the main frame 24 is an engine 81 mounted on the rear crossplate 55. The engine 81 is secured to channel shaped mounting bracket 82, bracket 82 having rubber mounting locations 83 for the engine 81. Fasteners 84 secure the engine 81 to the rubber mount 83 on the crossbar 55. At the forward end of the engine 81, the engine is connected to a dual, variable displacement hydraulic pump 85 by the engine shaft (not shown). The forward end of the pump is mounted on the top wall 71 of the transmission case 70 at forward mount 83. Uprights 56 and bottom, front and top crossmembers 55, 61 and 62 and the rear door 63, partially enclose the engine 81. Floor plates 72*a* are joined to a connecting closure 79 secured between floor plates 72*a* to completely enclose the lower front portion of compartment 65. A seat pan 97 which is secured to flanges 51 of the main frame 24 to extend between upper edges of side beams 50 forms a top portion of an enclosure 98 for the compartment 65. A seat pan extension member 99 extends upwardly from the rear edge of the seat pan 97, terminating at a rearwardly directed upper flange 100, the flange 100 secured to an upper extension of the upright front cross member 61. Front panels 102 extend between the seat pan 97 and the case 70, to close the forward end of the enclosure 98, with outer front panels 102 joining the case at side flanges 72*a* and an inner front panel 102 joining the case 70 at top wall 71.

Louvers 62*a* are provided in top crossmember 62 to dissipate engine noises toward the rear end away from the operator compartment to minimize engine noise levels. Rear door 63 mounted on one upright 56 and locked on the opposing upright 56, encloses the rear end of the engine 81. Hinges 63*a* are inserted into openings provided in the first upright 56 to support the door 63. The door 63 also has louvers 63*b* to admit entering air to the carburetor of the engine. Uprights 56, crossmembers 55, 61 and 62, rear door 63, seat pan 97, front panels 102, the transmission case 70 and floor plates 72*a* and closure 79 comprise the enclosure 98 designed to reduce engine and transmission noise.

Hydraulic System

Referring now to the hydraulic system driving the vehicle, please see FIGS. 7 and 8. First and second variable displacement pump units 85*a*, 85*b* are driven on a common shaft connected to the engine drive shaft. First and second pumps 85*a*, 85*b* are operatively connected by hydraulic lines 170 to first and second hydraulic motors 86, 87 mounted on the transmission case of the vehicle.

Each of the first and second variable displacement pumps 85*a*, 85*b* includes a circular array of pistons and cylinders which revolve against swash plates which may be tilted by means of a control linkage (not shown) connected to respective controls 171, 172 on the first and second pumps 85*a*, 85*b* to vary the displacement of the pumps 85*a*, 85*b*. The control linkage is connected to control levers 25 on each side of the operator's seat 12 such that movement of either the right or left lever 25 will cause movement of control 171 or 172 so as to change the angle of the swash plate of either the pump 85*a* or 85*b* depending on the movement of the vehicle desired. It is understood of course, that the engine 81 will be driven at a constant rpm ordinarily and variable speed is attained by manipulation of the swash plate.

An implement pump 180 is axially aligned with the pumps 85*a*, 85*b* and is operatively connected by means of the hydraulic hoses 181 and 182 to a valve bank 183 which controls the lift and tilt cylinders 34, 37 connected by a linkage (not shown) such as described in application Ser. No. 635,559, now U.S. Pat. No. 4,043,416, supra, to the control lever 25. A separate hydraulic reservoir 185 (FIG. 4) is provided to supply fluid as needed for the hydraulic components of the vehicle. Each of the motors 86, 87 are provided with bleed-off lines 186, 188 directing hydraulic fluid to a cooler 190. The fluid is carried from the cooler to the inlet portion of the pump 180.

Referring further to the valve bank 184, valve ports 191, 192 operate the lift cylinders 34 and valve ports 193, 194 operate the tilt cylinder 37. More fluid is required to extend the cylinders 34, 37 than to retract them. Accordingly, additional fluid is drawn into the pump 180 from the reservoir 185 through lines 182. When the cylinders are retracted an excess of oil is available. The excess oil is carried back to the reservoir through lines 195 to by-pass valve 208 through lines 182. Line 209 carries oil from outlet 184 of valve bank 183 through filter 210 to main pumps 85*a* and 85*b*.

The pump 85*b* and implement pump 180 are shown in more detail in FIG. 8. The pump 85*b* comprises a swash plate 201 mounted in the pump section 200. A series of revolving pistons 202 engage the face of the swash plate 201 in the pump section 200. Pistons 202 are caused to revolve by driving the engine input shaft and the displacement of each piston per revolution may be adjusted by varying the angle of tilt of the swash plate 201. It may be pointed out that the position of swash plate 201 shown in FIG. 8 is neutral, with no piston displacement per revolution. Reverse and forward displacement results when swash plate 201 is tilted. The output of pump unit 85*b* is directed to hydraulic motor 87 to cause rotation of the output shaft in either the forward or the reverse direction.

Normally the output shafts 207 and 208 of pumps 85*b* and 180 are axially aligned with an oil seal therebetween to isolate the pumps from each other. Excess fluid passes from pump 85*b* to external piping carrying the fluid to the pump 180. In the present invention, pump inlet port 203 is provided between pumps 85 and 180 by removing the shaft oil seal therebetween, thus eliminating the need for fluid flow externally of the case of hydrostatic pump 85*b* to inlet port 204 of hydraulic auxiliary pump 180. Thus external piping from excess oil drain port 206 of pump 85*b* to inlet port 204 of pump 180 can be eliminated.

The vehicle shown and described thus presents an improved vehicle having a substantially lower profile, particularly suitable for low clearance applications. While only a single embodiment of our invention has been described in detail, it will be understood that the detailed description is intended to be illustrative only and that various modifications and changes may be made to our invention without departing from the spirit and scope of it, therefore the limits of the invention should be determined from the attached claims.

We claim:

1. In a skid steer vehicle, vehicle drive means comprising an engine mounted in the rear of the vehicle, a variable displacement pump driven by said engine, said variable displacement pump being characterized by a series of revolving pistons and cylinders, said pistons being displaced by an inclinable swash plate, a hydraulic pump for driving implements associated with the vehicle juxtapositioned forward of the variable displacement pump and axially aligned therewith, said drive means including an output shaft associated with the variable displacement pump and an output shaft associated with the implement pump, the respective shafts axially aligned, and internal connecting means between the variable displacement pump and the hydraulic implement pump comprising a passage between the respective pumps concentric with the axial shafts of the pumps, the passage providing an internal means for the flow of excess hydraulic fluid from the variable displacement pump to the implement pump, to supply the implement pump with inlet fluid.

* * * * *