# United States Patent [19]

**Bauer et al.**

[11] **4,055,262**

[45] **Oct. 25, 1977**


[54] **LOADER MAIN FRAME FOR SKID STEER LOADER**


[75] Inventors: **James J. Bauer**, Lisbon; **Larry E. Albright**, Gwinner, both of N. Dak.; **James L. Werner**, Lamar, Mo.; **Thomas M. Sagaser**; **Lonnie D. Hoechst**, both of Gwinner, N. Dak.

[73] Assignee: **Clark Equipment Company**, Buchanan, Mich.



[21] Appl. No.: **654,256**

[22] Filed: **Feb. 2, 1976**

[51] **Int. Cl.**[2] ..... **L02F 3/62**

[52] **U.S. Cl.** ..... **214/140**; 180/89.12; 296/28 C

[58] **Field of Search** ..... 214/131 R, 140, 770, 214/145 A, 778; 180/6.48, 89 R, 89.12; 296/28 R, 28 C



[56] **References Cited**

U.S. PATENT DOCUMENTS

| | | | |
|---|---|---|---|
| 3,198,551 | 8/1965 | Garner | 180/6.48 |
| 3,231,117 | 1/1966 | Melroe et al. | 180/6.66 X |
| 3,635,365 | 1/1972 | Bauer | 214/778 |
| 3,718,222 | 2/1973 | Foster | 214/145 A |
| 3,776,325 | 12/1973 | Jespersen | 180/6.48 |
| 3,800,969 | 4/1974 | Steiger | 214/140 X |
| 3,828,952 | 8/1974 | Klee | 214/140 |
| 3,895,728 | 7/1975 | Heggen | 214/140 |
| D. 224,588 | 8/1972 | Bauer | D12/57 |
| D. 231,482 | 4/1974 | Bauer | D12/57 |

FOREIGN PATENT DOCUMENTS

| | | | |
|---|---|---|---|
| 144,961 | 4/1954 | Sweden | 214/131 |



*Primary Examiner*—L. J. Paperner
*Attorney, Agent, or Firm*—Harry G. Thibault



[57] **ABSTRACT**

A skid steer loader comprising an improved loader main frame and including an operator's compartment designed to present a low profile vehicle particularly suitable for low clearance applications. The loader main frame includes a center compartment partially defined by a pair of longitudinally extending, laterally spaced side beams. The engine for the vehicle is mounted at the rear of the center compartment and is acoustically enclosed by structural elements of the frame. A seat pan mounted on the side beams overlies the engine and transmission and separates the operator compartment from the center compartment. At a forward end of the center compartment an elongated transmission case forms a partial bottom wall and also encloses the chain and sprocket drive system of the vehicle. The side walls of the transmission case are displaced from the side walls of the frame, enabling the operator to straddle the case, thus reducing height requirements for both the operator compartment and the overall vehicle. Uprights secured to the side beams of the main frame at respective outer rear portions thereof partially enclose the rear portion of the center compartment and boom loader arms are secured to upper pivotal mountings provided on the uprights. Respective front ends of the loader arms are arcuately proportioned to extend forward of the wheels of the vehicle.


**16 Claims, 15 Drawing Figures**

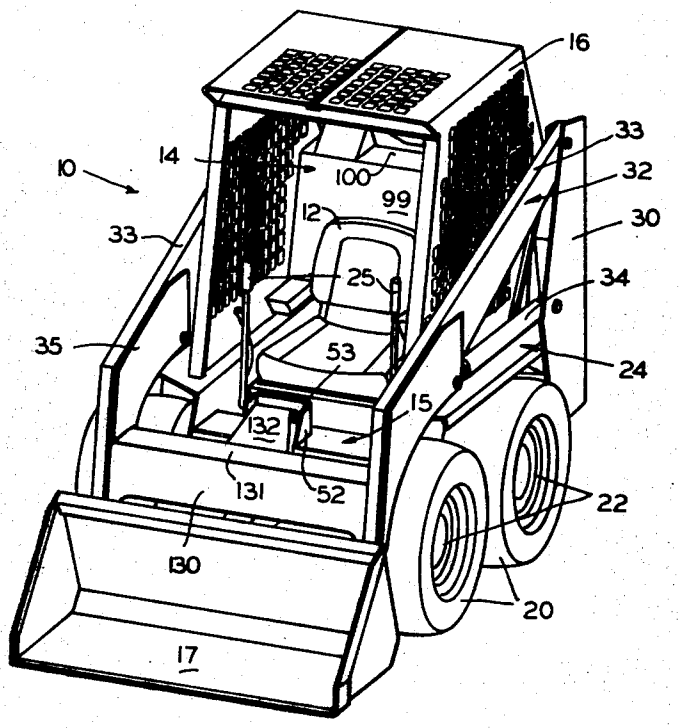

FIG. 1

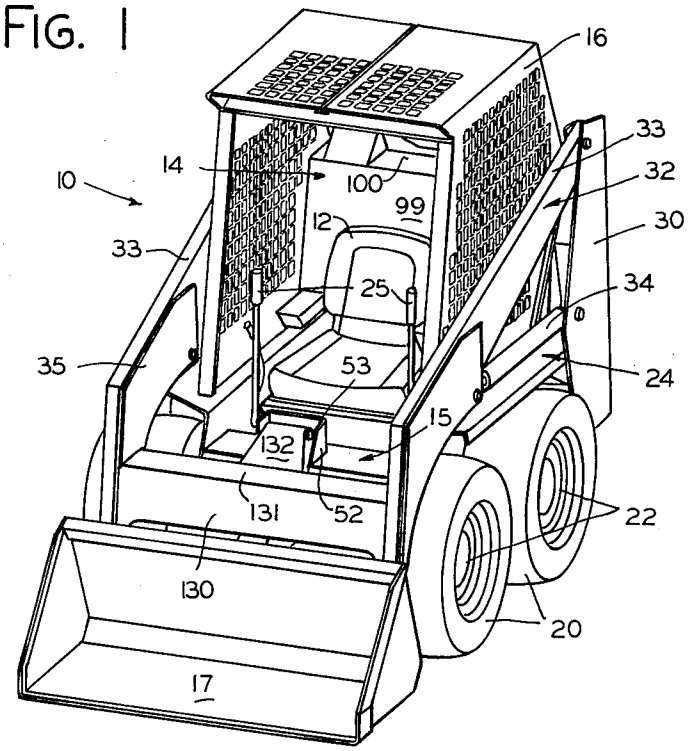
16
33
32
30
34
24
22
20
10
14
100
99
12
33
25
35
53
15
132
131
52
130
17

FIG. 2

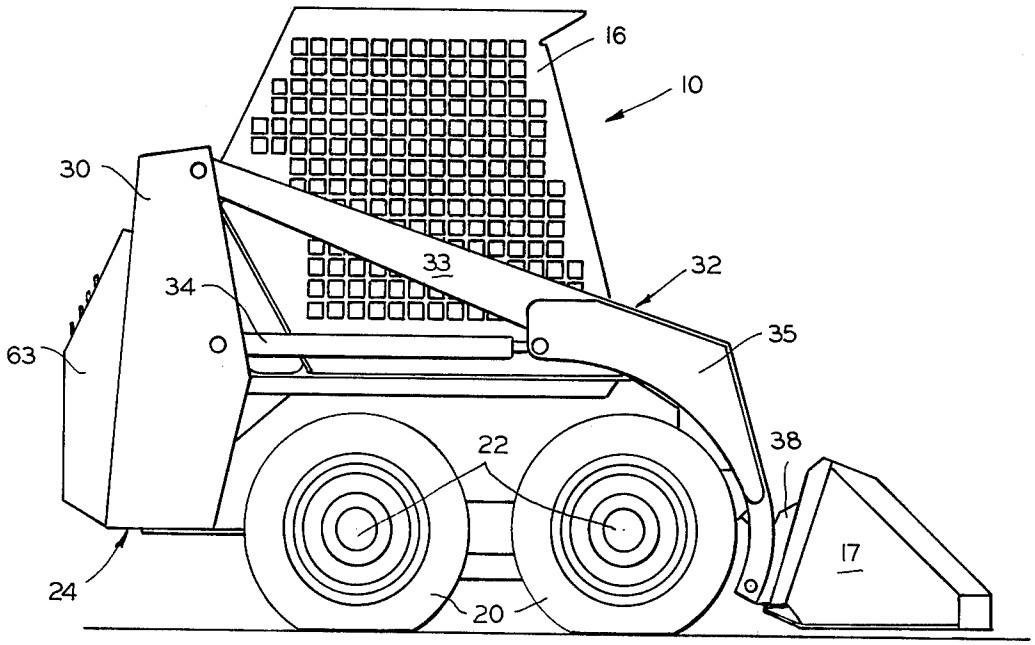
16
10
30
33
32
34
35
63
22
38
17
24
20

FIG. 3

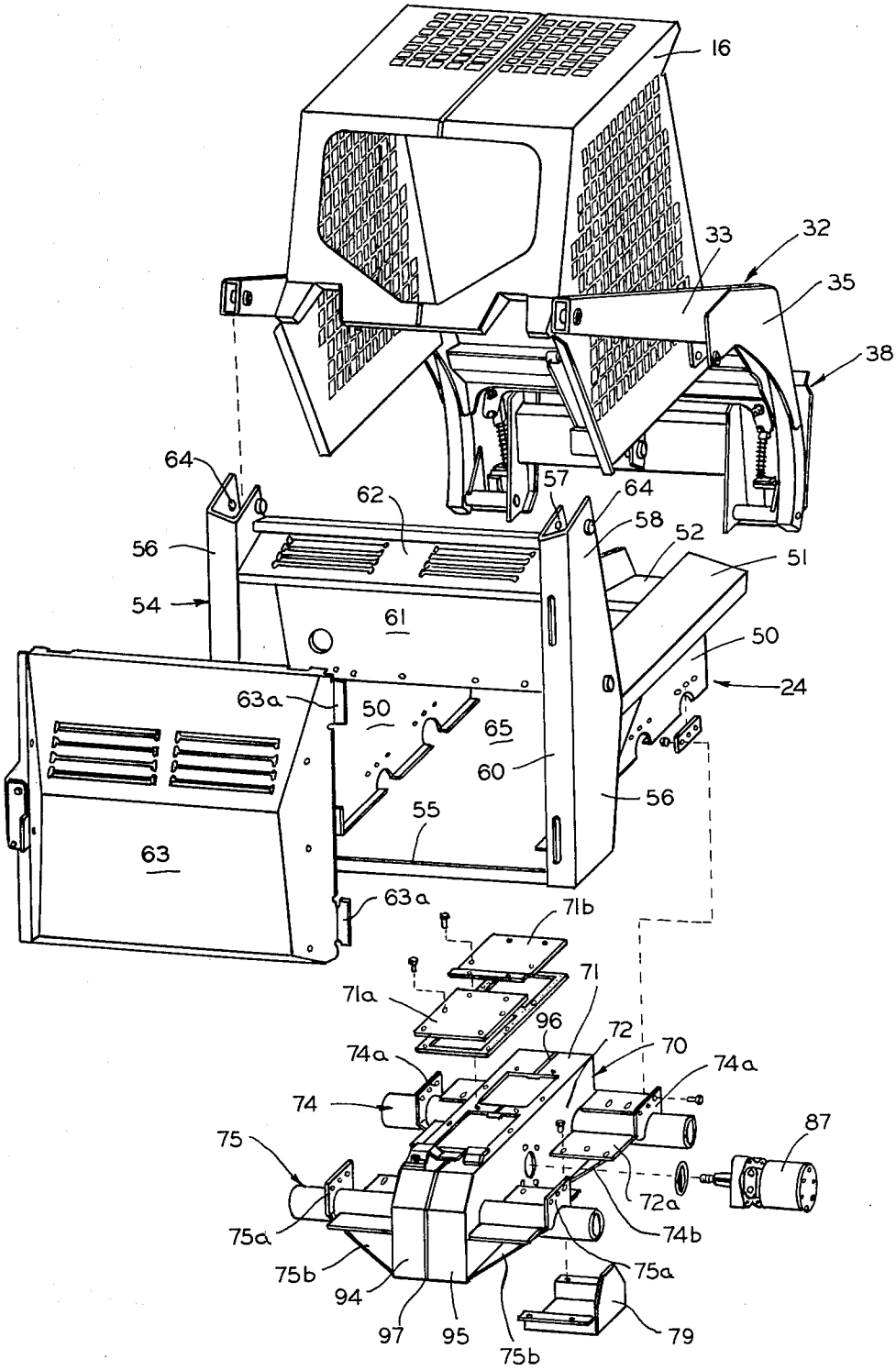
16
32
33
35
38
64
62
57
64
58
52
51
56
54
61
50
24
63a
50
65
60
56
55
63
63a
71b
71
71a
96
72
70
74a
74a
74
87
75
72a
75a
74b
75b
75a
94
97
95
75b
79

FIG. 4

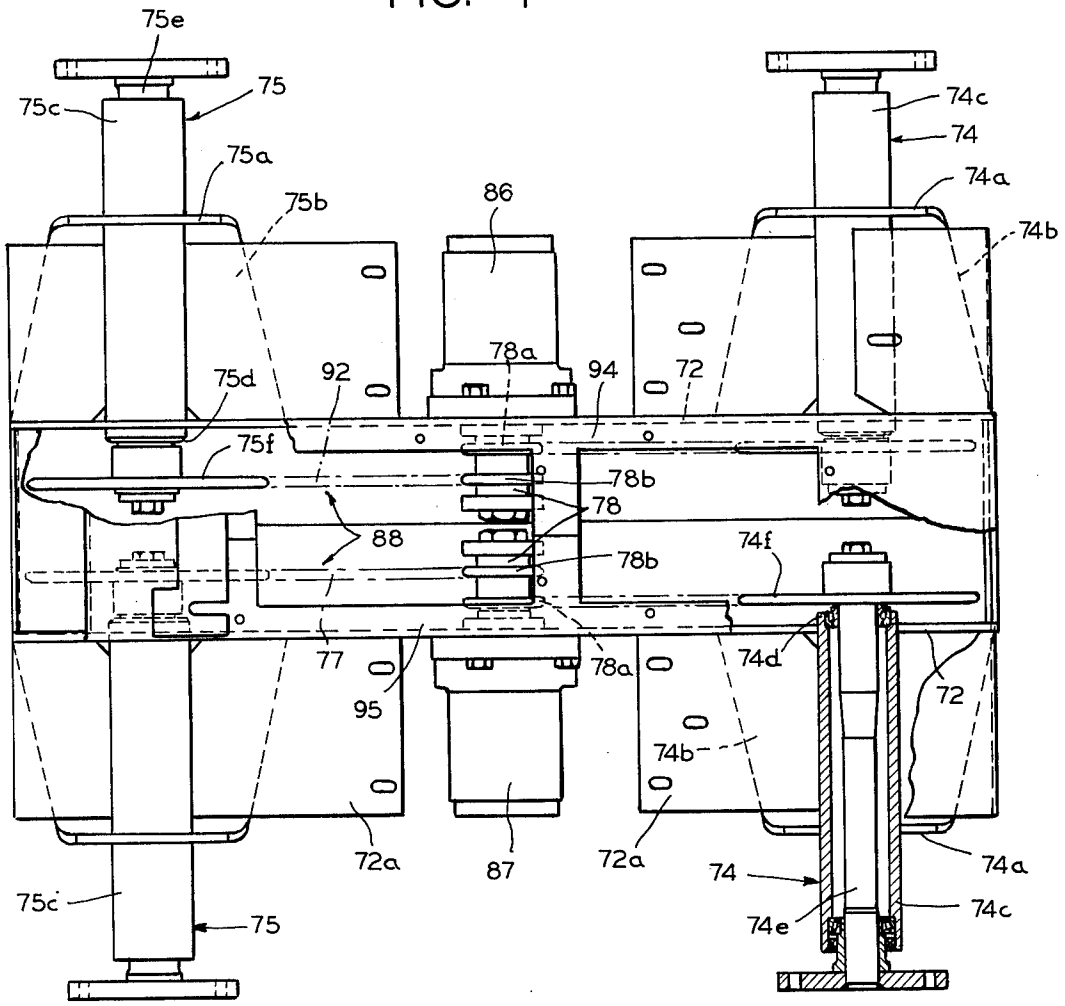
75e
75
75c
75a
75b
86
74c
74
74a
74b
78a
94
72
75d
92
75f
78b
78
88
78b
74f
77
78a
74d
72
95
74b
72a
87
72a
74
74a
75c
75
74e
74c

FIG. 5

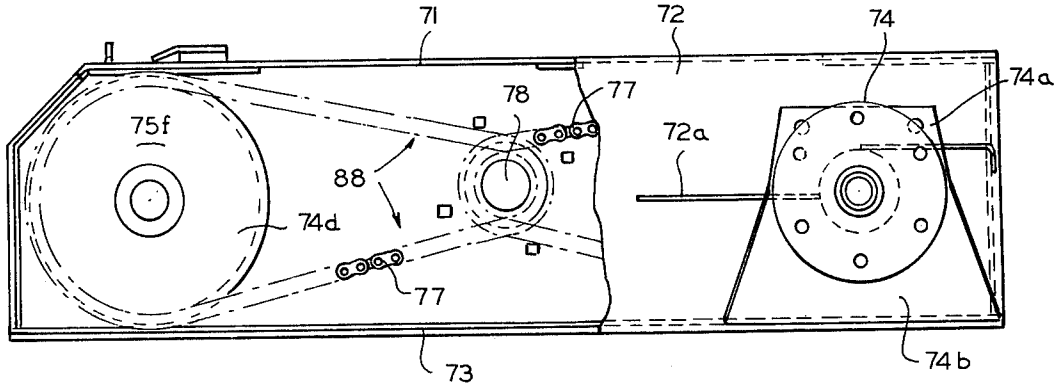
71
72
74
74a
78
77
75f
72a
88
74d
77
73
74b

FIG. 6

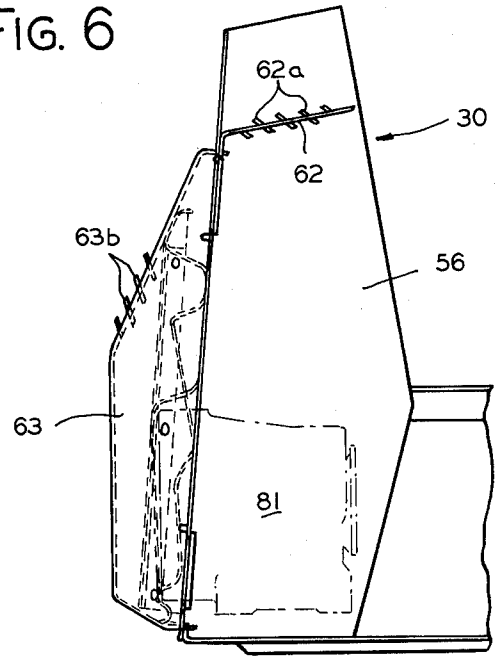


FIG. 7

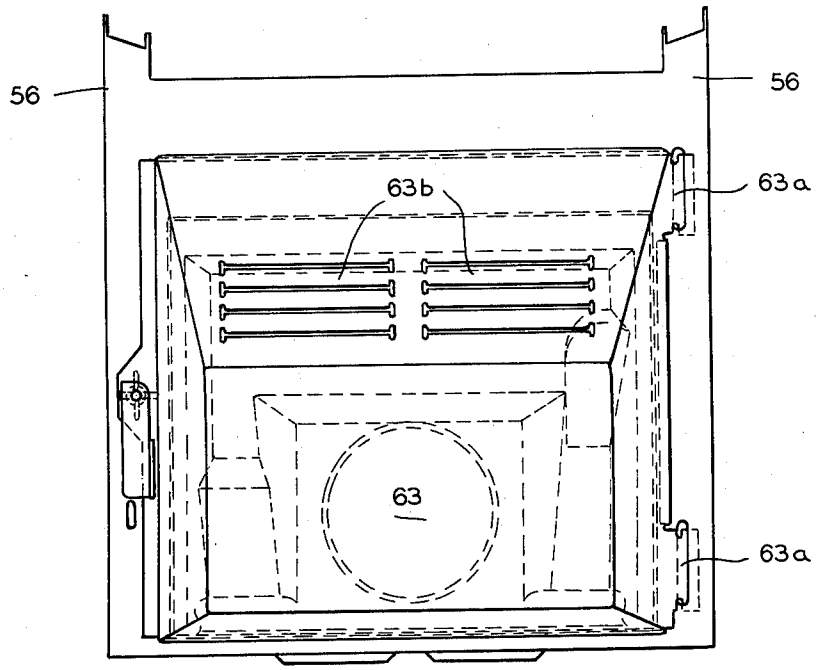

FIG. 8

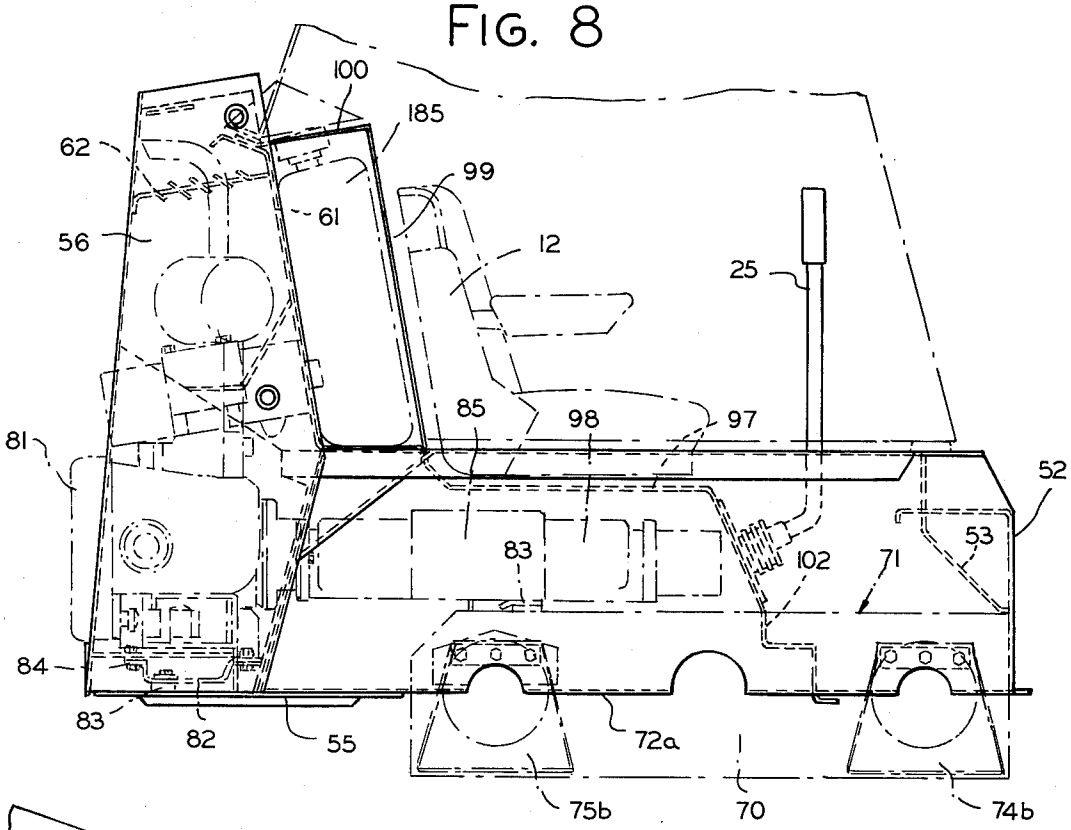
100
185
62
99
61
56
12
25
85
98
97
81
52
53
83
102
71
84
83
82
55
72a
75b
70
74b

FIG. 9

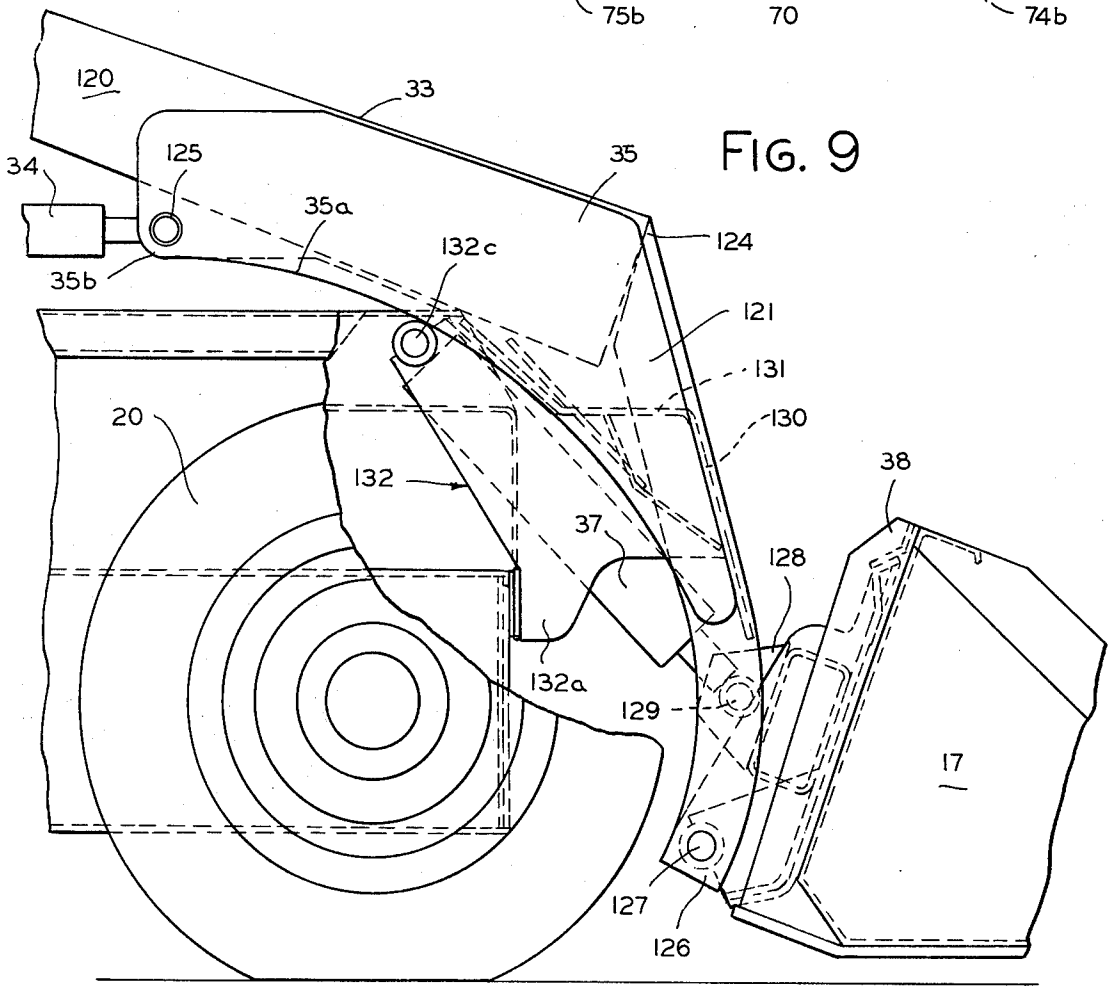
120
33
34
125
35
35a
124
132c
35b
121
131
130
20
132
38
37
128
132a
129
17
127
126

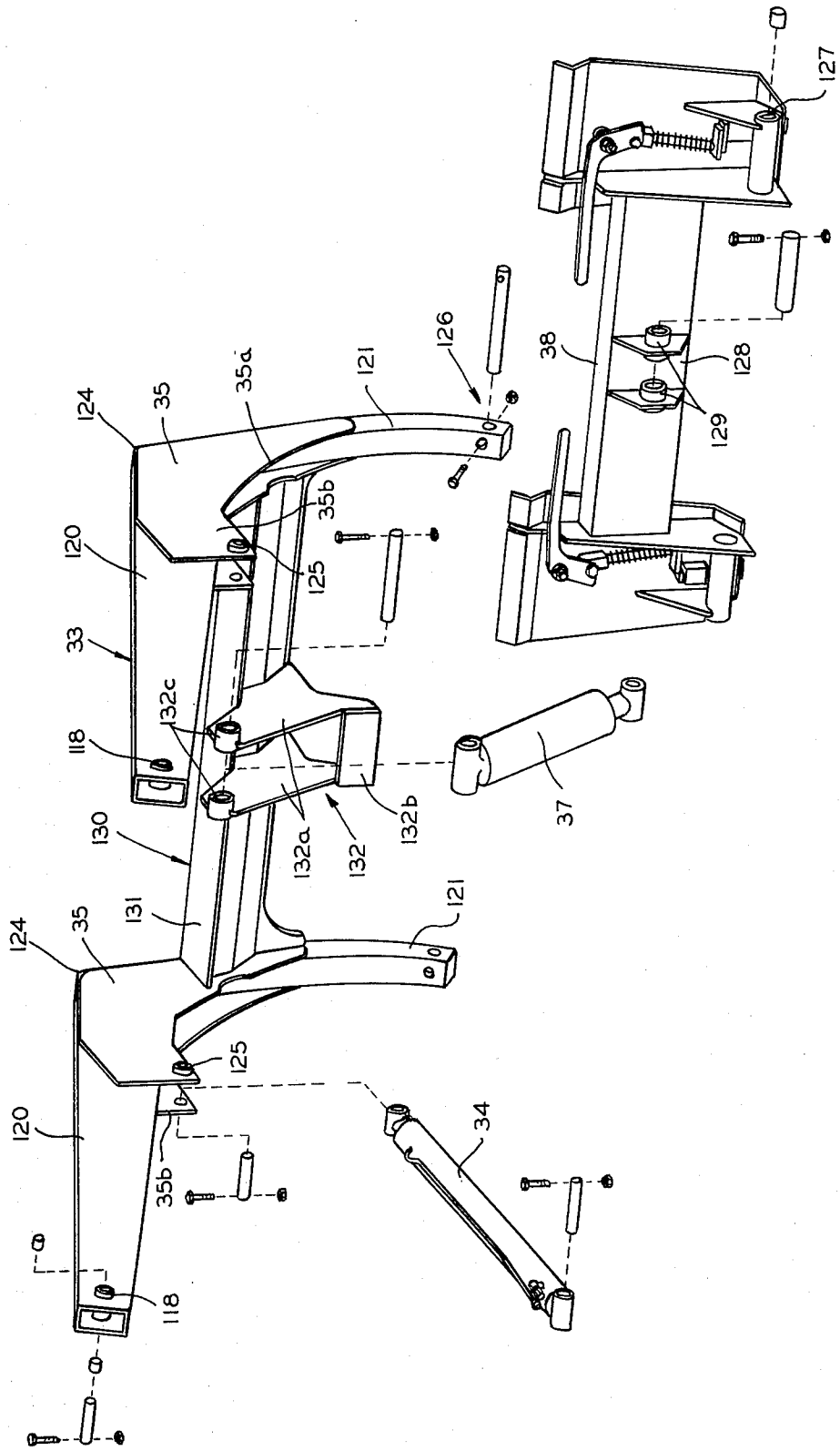
127
126
38
128
129
124
35
35a
121
35b
125
120
33
132c
118
130
132a
132
132b
37
131
121
124
35
125
120
35b
34
118

FIG. 10

FIG. 13

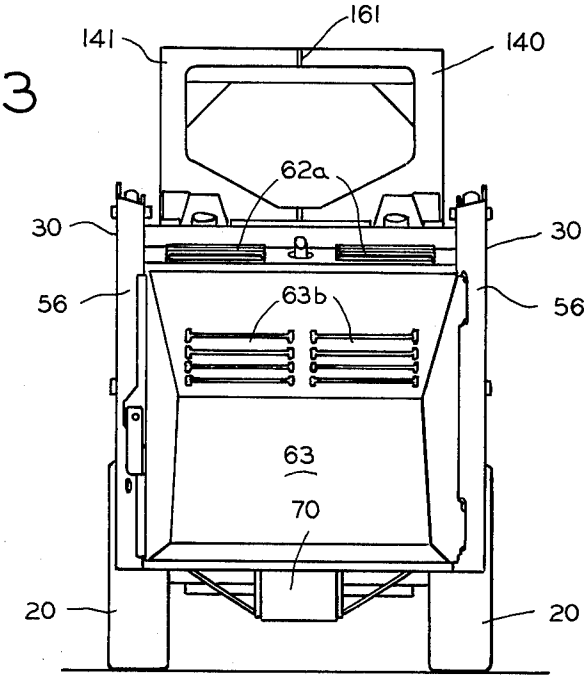
161
141
140
62a
30
30
56
56
63b
63
70
20
20

FIG. 11

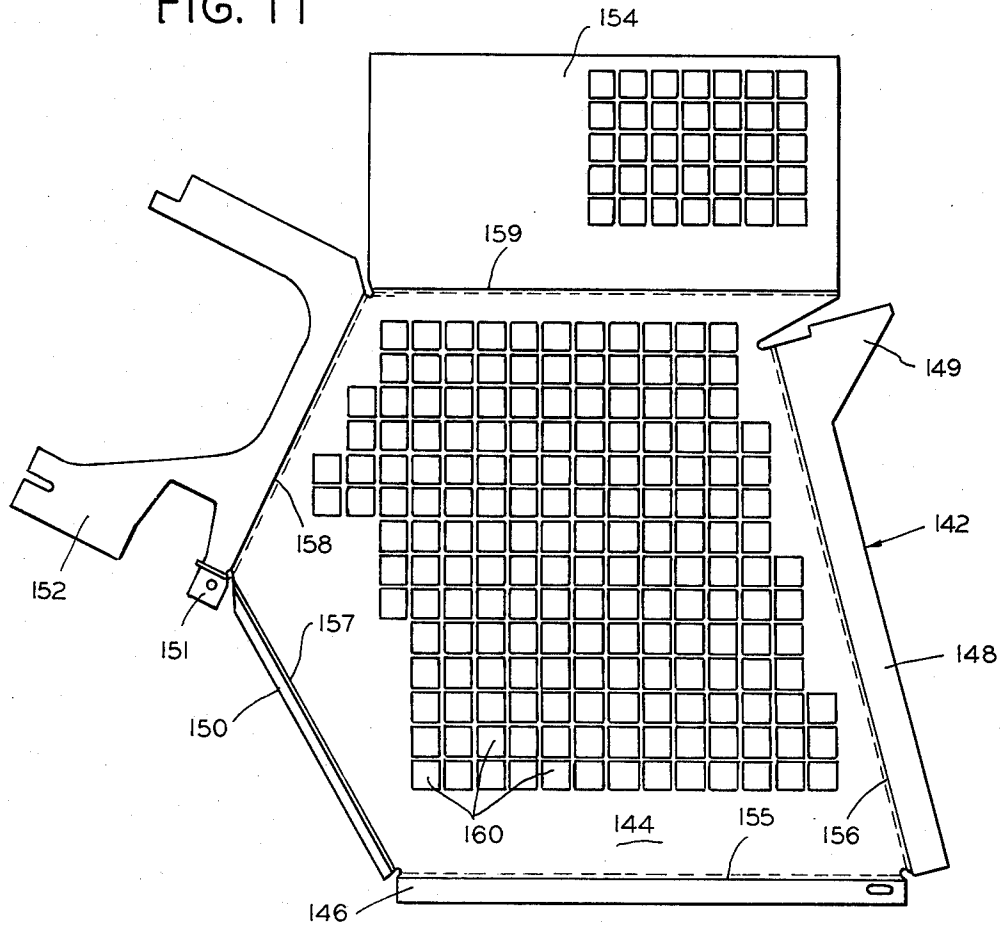
154
159
149
142
158
152
151
157
148
150
160
144
155
156
146

FIG. 12

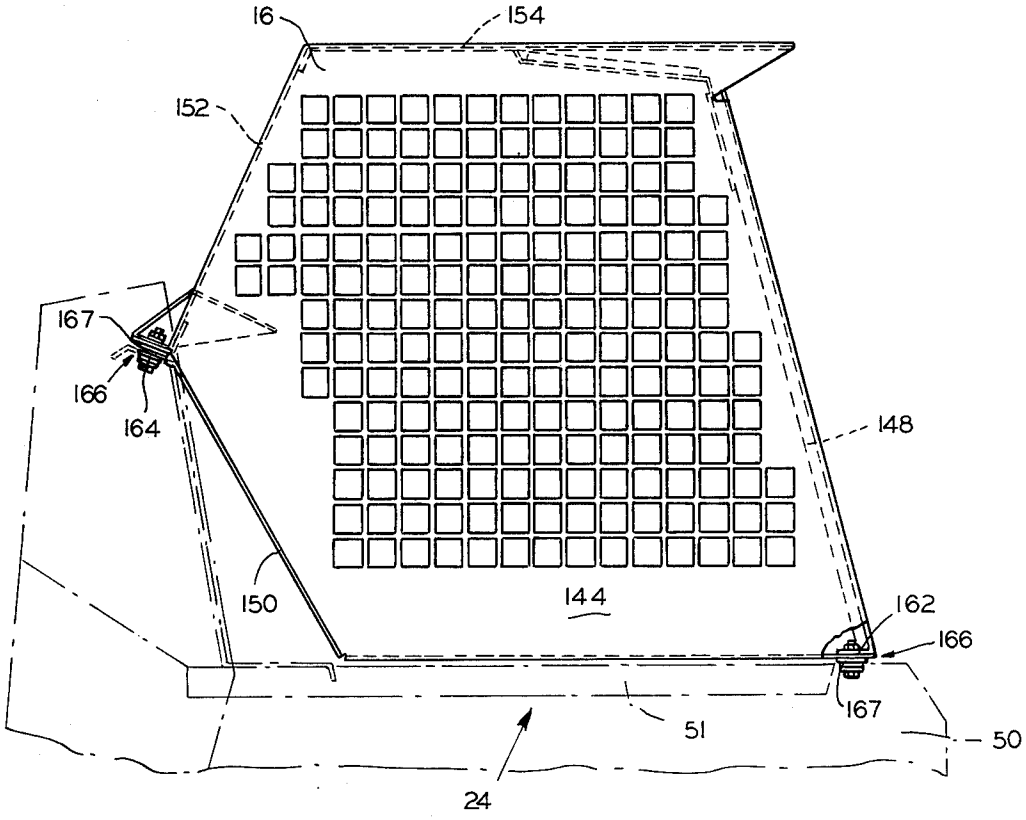
16
154
152
167
166
164
148
150
144
162
166
167
51
50
24

FIG. 15

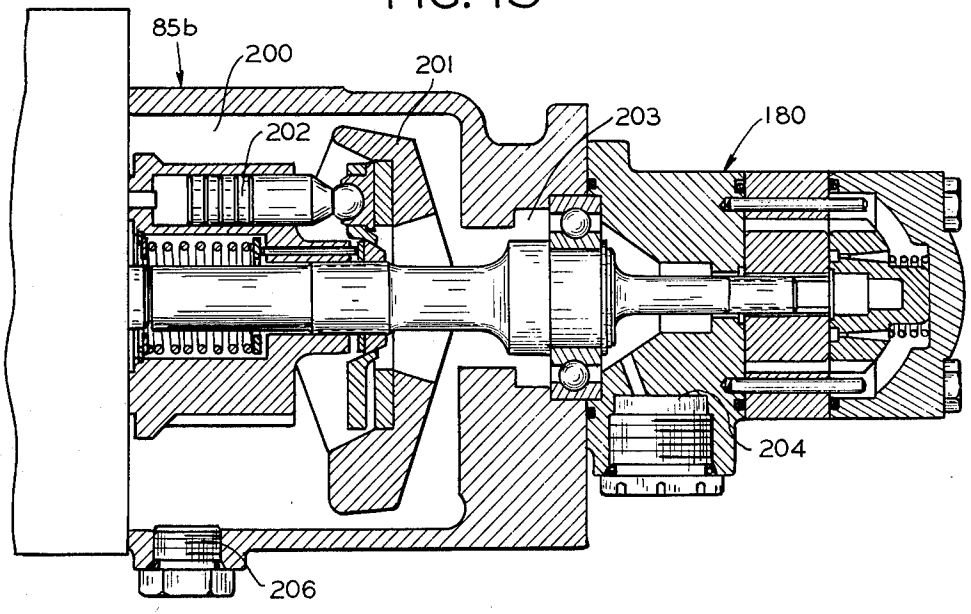
85b
200
201
202
203
180
204
206

FIG. 14

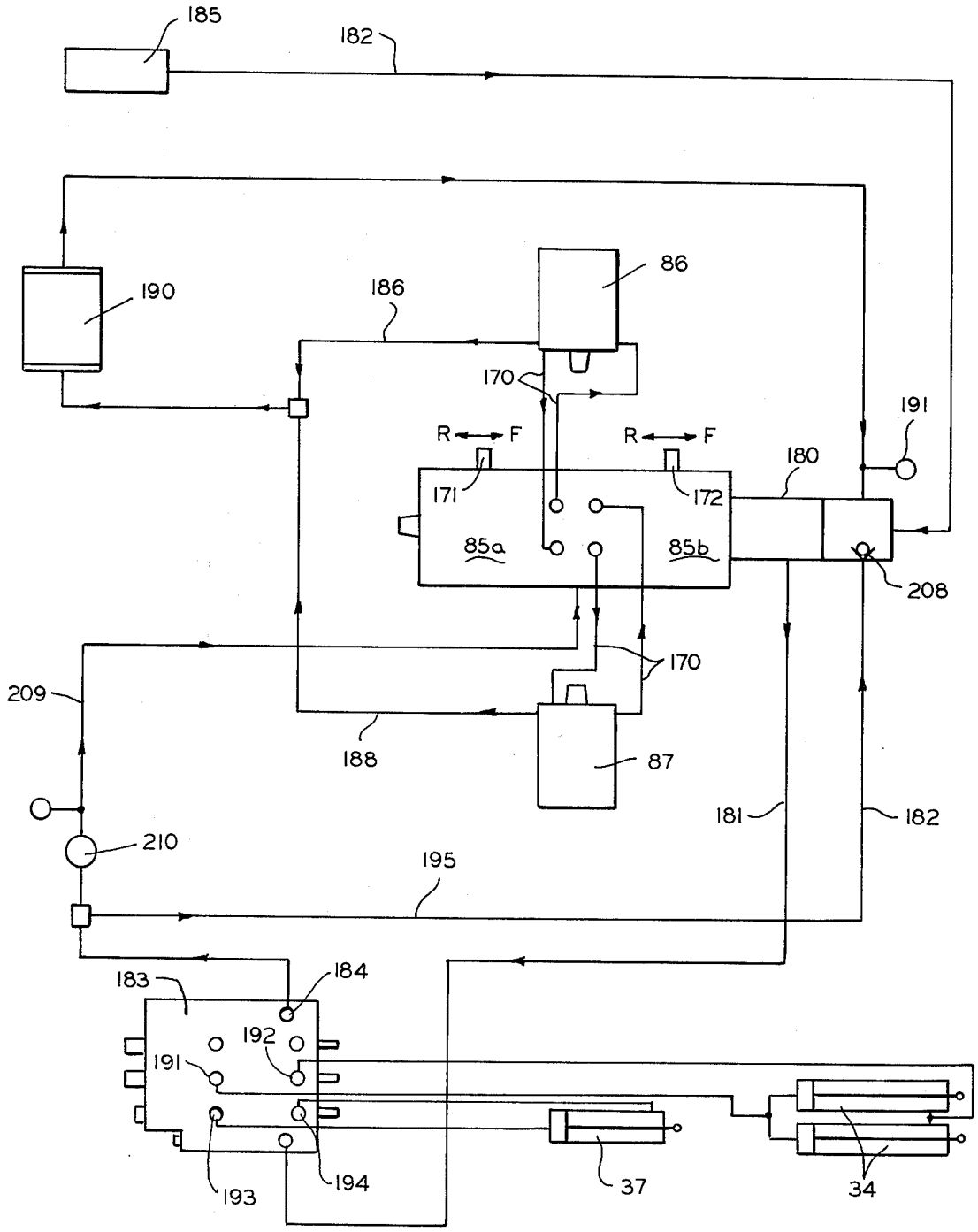
185
182
190
186
86
170
R ← → F
R ← → F
171
172
180
191
85a
85b
208
170
209
188
87
181
182
210
195
183
184
192
191
193
194
37
34

# LOADER MAIN FRAME FOR SKID STEER LOADER

## FIELD OF THE INVENTION

This invention pertains to the art of skid steer loaders and more particularly to a main frame for an improved loader adapted to provide an improved operator's module and to incorporate a low profile particularly suitable for low clearance applications.

## BACKGROUND OF THE INVENTION

Skid steer loaders are vehicles possessing a high degree of maneuverability which are propelled and maneuvered by driving the wheels on one side of the vehicle at a different speed and/or in a different direction from those on the other side of the vehicle so as to achieve a turning motion. In the case where the wheels on one side are driven forwardly and those on the opposite side reversely, the loader will turn on its axis or, in other words, spin in its tracks. However, the operator's compartment of such vehicles are typically constricted, with the operator surrounded by the working elements of his machine and buffeted by engine and transmission noise.

Typically, the skid steer loader's high levels of maneuverability are put to best use in operations wherein the loader's steering abilities easily enable it to negotiate around obstacles such as struts, columns and supports encountered in an enclosed environment and used to support the structure in which the loader is working. However, in many instances, particularly in agricultural applications, the requirements of the job include a necessity for a machine which has the ability to work under conditions of low clearance as well as conditions requiring high maneuverability. Such low clearance applications requiring a low profile vehicle suggest a further encroachment of the operator's space. Further, the necessity of providing a protective enclosure for the machine operator has heretofore limited the low clearance capability of such skid steer loaders. Heretofore low vehicle clearance has been achieved only at a sacrifice in load capability and power, and with additional encroachment on the operator's compartment.

## DESCRIPTION OF THE PRIOR ART

The prior art vehicles generally present an upright box-like structure of uniform body width wherein all structural members are located inside the inner face of the wheels mounted on the vehicle. A skid steered loader having such a body construction and employing a hydrostatic drive comprising two independent variable speed transmissions, one mounted on each side for driving their respective sets of wheels, is disclosed in U.S. Pat. No. 3,635,365 entitled "Tractor Vehicle with Hydrostatic Drive Means" by James J. Bauer which issued Jan. 18, 1972 to the assignee of the present invention. The design of that vehicle is also the subject of U.S. Pat. No. Des. 224,588 entitled "Self-Propelled Loader Vehicle" by the same inventor, issued Aug. 8, 1972 also assigned to the assignee of the present invention.

Efforts to improve the mobility of a skid steer loader vehicle also involved body design. For example, it is known that a skid steer loader should preferably have a wheel base shorter than the center-to-center distance between the wheels on opposite sides of the loader to reduce tire wear and resistance to skid turns. Further,



proper weight distribution in a skid steer vehicle improves mobility. Thus the engine is located in the rear and partially counterweights the loader bucket in front. An earlier attempt to change the body design of the vehicle is disclosed in U.S. Pat. No. 3,895,728 entitled "Tractor Vehicle Having Material Handling Subframe" by John P. Heggen which issued July 22, 1975 to the assignee of the present invention. Although the frame described in the above patent was designed to isolate the loader and skid steering forces of the vehicle from the drive components, no consideration was given to improving the operator's compartment of such vehicle or designing such frame for low clearance applications.

An early effort to change the profile of the skid steer loader is shown in U.S. Pat. No. Des. 231,482, entitled "Self-Propelled Loader Vehicle" by James J. Bauer, issued Apr. 23, 1974, and assigned to the assignee of the present invention. This latter vehicle represents a scaled down version of a larger vehicle with some design modifications. The rear loader uprights and the boom arms project outwardly from the side frames to overlie the wheels of the vehicle, but an offset knee must be provided at the front end of the boom arms to accommodate power cylinders mounted on each loader arm for operating the loading bucket. Further, the operator enclosure becomes a fairly narrow, high enclosure, severely restricting side-to-side movement of the operator. Further, the load carrying capacity of such vehicle is severely limited since it remains primarily a scaled down version of a larger model.

The present invention represents a substantial innovative advance over the prior art in that a vehicle having a mid-range operating capacity (800 lbs. load capability) presents a wider and lower profile specially suited for low clearance, agricultural applications with little sacrifice in operating capacity, and substantial increase in operator compartment space.

Further substantial innovative advances have been made to accomplish the low profile of the present vehicle without sacrificing any substantial operating capacity and with marked improvement in operator comfort as summarized below.

## SUMMARY OF THE INVENTION

The present invention comprises an improved main frame for a skid steer loader vehicle, the main frame comprising a center compartment partially defined by a pair of longitudinally extending, laterally spaced side beams. At the rear of the center compartment the main frame integrates a number of structural elements therefor to provide an acoustic enclosure for the engine for dissipating engine noises. Operator comfort is enhanced by substantially reduced noise levels for the loader in the operative mode. The improved acoustic enclosure for the engine reduces noise levels substantially, making the improved loader one of the quietest in the industry.

A cross plate is welded between the longitudinally extending laterally spaced side beams at respective rear bottom portions to form a partial floor at the rear of the main frame. A front wall having an inwardly turned top flange is secured between the side beams at respective front portions thereof. A transmission case presenting an elongated, substantially narrow, profile is mounted at a forward end of the side beams to form a partial floor at the front of the main frame for a center compartment of the main frame. Skid steering forces as well as the normal loader forces are largely isolated from the drive components associated with and contained in the case.

The interior compartment formed receives the engine at a rear portion thereof. The main frame substantially surrounds the center compartment in laterally spaced relation.

Protruding from the case at respective front and rear ends thereof are the stub axles for the vehicle. Brackets mounted on the stub axles secure the case to the side beams of the main frame. Housed within the transmission case is the chain and sprocket drive for each set of wheels for the vehicle. Bolted to the outside of the transmission case are a pair of hydraulic motors which drive their respective set of wheels through the chain and sprocket drive contained within the transmission case. The transmission case is oil filled to lubricate the drive for the vehicle. The mounting of the drive motors on the outside of the case permits a relatively long, narrow configuration for the case enabling a re-design of the operator's compartment which substantially increases the amount of leg room in the operator's space by permitting the operator to straddle the transmission case.

New fabrication methods for the transmission case include the manufacture of separate halves of the transmission case with the housings for the stub axles mounted in place for boring. The housings for the stub axles are bored as mounted on the transmission case with the axle shafts thereafter rotatably mounted in the housings, the separate halves of the transmission case being assembled after the axle housings are bored. This technique substantially reduces welding distortion produced by mounting pre-bored stub axles in place after the transmission case is assembled.

The chain drive for the vehicle has also been modified to improve the reliability of the vehicle. The new drive sprocket arrangement places the sprocket driving the rear wheel of each set of wheels at the outer end of the output shaft of the drive motor. The inner sprocket, mounted on the shaft between the outer sprocket and the drive motor, drives the front wheel of the set. Thus the rear chain offers substantial resistance to forces exerted on the vehicles under loading conditions. Torsional forces exerted on the vehicle under loading conditions are substantially greater for the front wheels. By mounting the chains for the front wheels on the inner sprockets moments for the cantilever mounted engine output shafts are balanced, with the greater forces exerted on the front wheels equalized by the longer moment arms for the rear wheels.

The engine is rubber mounted on the bottom cross plate provided at the rear of the center compartment. Suitably secured to the engine are dual axially aligned variable displacement pumps which drive the motors mounted on the transmission case. Mounted between an operator compartment and the engine is a hydraulic reservoir for the pumps.

A pair of uprights are fabricated from plate material and are mounted at the rear of the side beams to structurally support loader arms mounted at upper pivotal mountings on each side. In the preferred embodiment the uprights are disposed outwardly of the main frame to lie behind the wheels mounted on the axles secured to the main frame of the vehicle. With the uprights of the loader vehicle lying behind the wheels of the vehicle, the loader arms, of necessity, must overlie the wheels of the vehicle. Accordingly, the front end of each loader arm has been arcuately proportioned to overlie the front wheels of the vehicle and to receive the outer end of the loader bucket thereon. To achieve this configuration the tilt cylinder for the loading bucket must be mounted inboard of the loader arms and the present invention incorporates a single mid-plane bucket tilt cylinder replacing the two cylinders mounted co-planar with the loader arms in the prior art.

The improved transmission case, as well as the outboard mounted loader arms, provides a wider, lower profile for the operator's compartment and permits a substantial reduction in the height of the overhead guard for the vehicle without reducing overall compartment height and a substantial increase in compartment width.

Further innovative advances have been achieved in the fabrication of the overhead guard of the vehicle. The overhead guard comprises stamped halves appropriately folded. When the required halves have been formed they are assembled and welded in place to provide a completed guard for the vehicle with minimal assembly time. Mounting means are provided for the overhead guard to absorb energy for protection under roll-over conditions and to vibrationally isolate the operator compartment under normal vehicle operating conditions.

The advantages recited above, as well as many others, will become more apparent to the reader in the detailed description set forth below when said description is viewed in conjunction with the drawings provided which are described as follows.

## DESCRIPTION OF THE DRAWINGS

FIG. **1** is a perspective view of a skid steer loader constructed in accordance with the present invention;

FIG. **2** is a side elevational view of the skid steer loader of FIG. **1;**

FIG. **3** is an exploded perspective view of the main frame of the skid steer loader showing the major structural elements of the vehicle, as viewed from the rear thereof;

FIG. **4** is a top plan view of the transmission case shown at the bottom of FIG. **3,** the case having portions removed for clarity;

FIG. **5** is a side elevational view of FIG. **4,** with portions of the case being removed for clarity;

FIG. **6** is a partial side elevational view of the main frame shown with the rear access door of the loader mounted in place;

FIG. **7** is an end view of the main frame showing the door in FIG. **6;**

FIG. **8** is a side elevational view of the main frame of the skid steer loader with certain elements associated with the operator's compartment added for clarity;

FIG. **9** is an enlarged partial side elevational view of the front end of the loader shown in FIG. **2,** with portions of the loader body and wheels being shown in phantom;

FIG. **10** is an exploded perspective view of the boom assembly of the vehicle, with the loader bucket omitted for clarity;

FIG. **11** is a top plan view of a sheet from which a portion of the overhead guard is fabricated;

FIG. **12** is a side elevational view of the overhead guard of the vehicle, a portion of the vehicle main frame being shown in phantom to indicate mounting locations for the overhead guard;

FIG. **13** is an end view of the vehicle, showing the assembled overhead guard of FIG. **12;**

FIG. **14** is a schematic of the hydraulic drive system of the skid loader; and

FIG. 15 is a partial sectional view of the pump shown in FIG. 14.

## DESCRIPTION OF THE PREFERRED EMBODIMENT

FIGS. 1 and 2 show perspective and side elevational views of a rigid frame, skid steer end loader 10 having the general arrangement of an operator's seat 12 in the middle of the loader with an engine space 14 at the rear and a space 15 at the front for the operator's legs. The operator's compartment area is enclosed by an overhead framework or guard 16 providing protection against objects falling on to the operator from above, such as materials spilling over the rear of a bucket 17 when in a raised position. The overhead guard 16 also serves as a roll-over protective structure. Wheels 20 are mounted on stub axles 22 projecting outwardly from opposite sides of the vehicle body or main frame 24.

It will be understood by those acquainted with skid steer loaders that the vehicle 10 is propelled through a turning motion by driving the wheels 20 on one side at a different speed and/or direction than those on the other side, causing the vehicle to have great mobility or maneuvering in either the forward or reverse direction. The "steering" is controlled by the operator using a pair of levers 25, one on each side of the operator's seat 12, which may be moved independently in a fore and aft direction to cause the wheels 20 on that side of the machine to rotate at a speed and in a direction corresponding to the direction of the lever 25. For example, both levers 25 may be moved together in either a forward or rearward manner causing the loader to travel straightforward or back up at variable speeds depending on the position of the lever. Or, the operator may move the levers simultaneously but to a greater degree on one side than the other, thus causing the loader to execute a turn. Or, by pushing one lever in one direction and pulling the other in the opposite direction the loader is turned on its axis or spun around virtually in its own tracks.

At the rear is a pair of rear posts or uprights 30 having pivotally mounted at respective upper ends thereof a boom assembly 32. The uprights 30 are disposed outwardly of the vehicle body 24 and lie behind the wheels 20 provided on either side of the vehicle. A pair of lift arms 33 of the boom assembly 32 ovelie the wheels 20 on each side of the vehicle 10 and extend forwardly alongside the operator's compartment and project arcuately downwardly at the front of the machine to overlie the front of the wheels 20. Mounted at the forward end of the lift arms 33 is the bucket 17. A boom lift cylinder 34, one on each side, is pivotally mounted at the rear end to the upright 30 and at the rod end to a pair of laterally spaced gusset plates 35 mounted on the lift arm 33. A bucket tilt cylinder 37 (FIG. 9) is suitably mounted between the front ends of the loader arms 33 for pivotal movement at the cylinder end and at the rod end to a bucket mounting attachment 38 which pivotally mounts the bucket 17 to the arms 33 at the point 39. By means of foot pedals provided in space 15 or auxiliary controls (not shown) associated with the levers 25 the operator is able to control independently the extension and retraction of the lift and tilt cylinders 34,37 when working with the machine. It will be understood that while an end loader is depicted in the drawings, the machine may be outfitted with various attachments other than the bucket 17.

Referring now to FIG. 3 main frame 24 of the vehicle 10 includes a pair of longitudinally extending, laterally spaced side beams 50 having outwardly directed upper flanges 51 which overlie the wheels 20 and serve as protective fenders for the vehicle. The side beams 50 are joined at the front by front wall member 52 and at the rear by a post or upright fabrication 54 including a bottom crossmember 55. The upright fabrication 54 includes a pair of uprights 56, formed of plate material, wider at the bottom and tapering upwardly toward the top. Each upright 56 comprises a pair of laterally spaced side portions 57 and 58, joined by a vertically extensive rear portion 60, the inner side portion 57 abutting the side beam 50, the side portion 58 spaced outwardly therefrom to provide a channel therebetween. Front crossmember 61 and top crossmember 62 extend between uprights 56 at the front and top thereof and a door 63 extends between uprights 56 at the rear thereof. A pivotal mounting location 64 is provided at the upper end of each upright 56 for each of the lift arms 33 of the boom assembly 32. The uprights 56 are mounted on the outside of the side beams 50 and are thus disposed outwardly of a center compartment 65 provided in the main frame 24.

The center compartment 65 of the main frame 24 is largely open and carries a sub-frame or transmission case 70 at a lower front portion thereof, the case 70 having front and rear stub axles 74,75 mounted thereon, with respective flanges 74*a*,75*a* laterally spaced from the case 70 being welded to outer ends of the stub axles 74. Gusset plates 74*b*,75*b* (FIG. 3) are provided between the flanges 74*a*,75*a* and a lower edge of the case 70. The flanges 74*a*,75*a* are used to secure the case 70 to the side walls 50 of the main frame 24.

The main frame 24 further includes the boom assembly 32 mounted on uprights 56 at pivotal mounting locations 64. The overhead guard 16 is mounted on flanges 51 of side beams 50 of the main frame 24.

Referring now to structural elements of the main frame 24:

## TRANSMISSION CASE

Referring now to FIGS. 3, 4 and 5, the sub-frame or transmission case 70 comprises top wall 71, side walls 72 and bottom wall 73. Front and rear stub axles 74,75 project from opposite sides of the case 70 adjacent each end. Axle housings 74*c*,75*c* are welded to the side walls 72 of the case 70 and open at respective inner ends 74*d*,75*d* into the compartment 70. Stub axle shafts 74*e*,75*e* are rotatably journalled in axle housings 74*c*,75*c* and carry at their inner ends wheel sprockets 74*f*,75*f* which are connected by chains 77 to the drive sprockets of a motor output shaft 78. In FIG. 3, it can be seen that the transmission case 70 is divided into halves 94 and 95, the halves 94 and 95 being welded together along a peripheral seam shown as 96,97 at top wall 71 and end wall 76 of the transmission case 70. The front and rear axle housings 74*c*,75*c* are welded to the separate halves of the transmission case prior to assembly. The axle housings are then bored prior to assembly and the halves 94,95 are then welded together. Openings in the top walls 71 provide access to the interior of the case 70 with axle shafts 74*e*,75*e* rotatably journalled in the axle housings 74*c*,75*c* therethrough. The chain and sprocket drives for the vehicle are then installed in place. Cover plates 71*a* and 71*b* are then mounted on the top wall 71 to complete assembly of the case 70.

The transmission case **70** presents an elongated substantially narrow profile, with side walls **72** laterally displaced from the side beams **50** of the main frame **24** when the case **70** is mounted in place. Lateral flanges **72***a*, having longitudinal edges secured to side walls **72** are mounted on the front and rear stub axles **74,75** to provide floor plates for the bottom of the operator's compartment **14**, enabling an operator seated in compartment **14** to straddle the case **70**.

The hydraulic drive means for the vehicle **10** comprises first and second variable displacement pumps **85** (FIG. **8**) driven on a common shaft connected to the engine drive shaft. First and second pumps **85***a*,**85***b* are mounted on an upper surface of top wall **71** of the case **70**. Mounted on respective outer surfaces of opposite side walls **72** of the case **70** are first and second hydraulic motors **86,87**. The mounting of hydraulic motors **86,87** is best shown in FIG. **4**. Each hydraulic motor has an output shaft **78** extending into the transmission case which carries at an inner end thereof drive sprockets **78***a* and **78***b*. The drive sprockets **78***a* and **78***b* comprise portions of chain and sprocket drives **88** provided for each set of wheels **20** and carried in the transmission case **70**. Endless chains **77** connect drive sprockets **78***a*,**78***b* to the wheel sprockets **74***f*,**75***f* carried on the inner ends **74***d*,**75***d* of the stub axle shafts **74***e*,**75***e* of the front and rear stub axles **74,75**. Drive sprocket **78***a* lies adjacent the side wall **72** of the transmission case **70**. A first endless chain **77** connects the drive sprocket **78***a* to the front wheel sprocket **74***f* carried at the inner end **74***d* of front axle **74**. Drive sprocket **78***b*, carried at the outer end of the output shaft **78**, is connected by a second endless chain **77** to the wheel sprocket **75***f* carried at the inner end **75***d* of rear axle **75**. The relative position of the sprockets **78***a*,**78***b* balances the moments of force exerted on the output shaft **78** by the drives for the front and rear wheels of the vehicle.

No additional gear reduction means such as those disclosed in U.S. Pat. No. 3,895,728, supra, are required. Hydraulic motors **86,87** mounted on the outside of the transmission case are of the rolling vane Gerotor type which possess inherent gear reduction capability. Any additional gear reduction required is achieved by the difference in the size of the drive sprocket **78** and the wheel sprockets **74***f*,**75***f* for the chain and sprocket drives **88**. First and second pumps **85***a*, **85***b* are operatively connected by means of hydraulic hoses to the first and second hydraulic motors **86,87** mounted on the outside of the transmission case **70**.

It will be appreciated that each of the first and second variable displacement pumps **85***a* and **85***b* include a circular array of pistons and cylinders which revolve against swash plates which may be tilted by means of a control linkage to vary the displacement of the pumps **85***a*,**85***b*. The control linkage provided for the variable displacement pumps **85***a*,**85***b* may be like that shown in application Ser. No. 635,559 entitled "Skid Steered Tractor Vehicle Combined Steering Lever and Auxiliary Control with Self-Centering Mechanism" filed Nov. 26, 1975 and assigned to the assignee of the present invention.

## ENGINE ENCLOSURE

As best seen in FIG. **8**, mounted at the rear of the center compartment **65** of the main frame **24** is an engine **81** mounted on the rear crossplate **55**. The engine **81** is secured to channel shaped mounting bracket **82**, bracket **82** having rubber mounting locations **83** for the engine **81**. Fasteners **84** secure the engine **81** to the rubber mount **83** on the crossbar **55**. At the forward end of the engine **81**, the engine is connected to a dual, variable displacement hydraulic pump **85** by the engine shaft (not shown). The forward end of the pump is mounted on the top wall **71** of the transmission case **70** at forward mount **83**. Uprights **56** and bottom, front and top crossmembers **55, 61** and **62** and the rear door **63**, partially enclose the engine **81**. Floor plates **72***a* are joined to a connecting closure **79** secured between floor plates **72***a* to completely enclose the lower front portion of compartment **65**. A seat pan **97** which is secured to flanges **51** of the main frame **24** to extend between upper edges of side beams **50** forms a top portion of an enclosure **98** for the compartment **65**. A seat pan extension member **99** extends upwardly from the rear edge of the seat pan **97**, terminating at a rearwardly directed upper flange **100**, the flange **100** secured to an upper extension of the upright front cross member **61**. Front panels **102** extend between the seat pan **97** and the case **70**, to close the forward end of the enclosure **98**, with outer front panels **102** joining the case at side flanges **72***a* and an inner front panel **102** joining the case **70** at top wall **71**.

Louvers **62***a* are provided in top crossmember **62** to dissipate engine noises toward the rear end away from the operator compartment to minimize engine noise levels. Rear door **63** mounted on one upright **56** and locked on the opposing upright **56**, encloses the rear end of the engine **81**. Hinges **63***a* are inserted into openings provided in the first upright **56** to support the door **63**. The door **63** also has louvers **63***b* to admit entering air to the carburetor of the engine. Uprights **56**, crossmembers **55, 61** and **62**, rear door **63**, seat pan **97**, front panels **102**, the transmission case **70** and floor plates **72***a* and closure **79** comprise the enclosure **98** designed to reduce engine and transmission noise.

## BOOM STRUCTURE

Referring now to FIGS. **9** and **10**, the boom assembly **32** is secured to the uprights **30** at pivotal connections **118**. The boom assembly **32** comprises a pair of boom arms **33** each arm having a longitudinal portion **120** having a box-shaped cross-section which slopes downwardly from the pivotal connection **118** and increases in section from rear to front. The member **120** has welded thereto at its forward end an arcuate portion **121** rectangular in cross-section which projects downwardly to extend forward of the front wheel **20** of the vehicle **10**, with both portions **120,121** of the boom arm **33** overlying the wheels **20** of vehicle **10**. Corner gusset plates **35** are provided on both sides of the juncture of the members **120** and **121** to reinforce joint **124** therebetween. Corner plates **35** each have a curved lower edge **35***a* which substantially follows the contour of the front wheel **20** of the vehicle **10** as best seen in FIGS. **2** and **9**. Lower rear portions **35***b* of the plates **35** project below the longitudinal portion **120** of the lift arm **33**. The corner plates **35** are provided on either side of a joint **124** between the members **120,121** and have mounted therein at the rear portions **35***b* thereof a pivotal mounting means **125** for receiving the rod end of the boom lift cylinder **34**.

The cylinder end of the boom lift cylinder **34** is secured to a lower end of the upright **30**. Provided at a lower end of the forward member **121** of the boom arm **32** is a pivotal mounting means **126** which provides a pivotal connection **127** at opposite lower ends of an implement attachment device **38** similar to that shown

in U.S. Pat. No. 3,672,521, issued June 27, 1972, entitled "Quick Attachment Device" and assigned to the assignee of the present invention. Reference may be had to the above-mentioned patent for a more detailed description of the attachment device. Provided at a midportion of the device **38** is a mounting bracket **128** providing a pivotal connection **129** thereon. A crossmember **130** having a rearwardly directed top structural flange **131** is secured between lower ends **121** of opposite boom arms **33**. The member **130** is provided for lateral stability of the boom assembly **32**. Mounted at the midpoint of the crossmember **130** is a tilt cylinder bracket **132**. The bracket **132** comprises a pair of laterally spaced plates **132*a*** structurally joined to a bottom plate **132*b***. A pivotal connection **132*c*** is provided on the plates **132*a*** at a rear upper end of the bracket **132**. The cylinder end of the bucket tilt cylinder **38** is secured to pivotal connection **132*c***. The rod end of the cylinder **38** is connected to the mounting bracket **128** of the device **38** at pivotal mounting means **129**. A recess **53** (FIG. **1**) aligned with the transmission case **70** at the front thereof provided in the front wall member **52** of the main frame **24** receives the cylinder bracket **132** when the boom assembly **32** is in a lowered position.

## OVERHEAD GUARD

Referring now to FIGS. **11, 12** and **13** the overhead guard **16** is a sheet metal fabrication comprising mated halves **140** and **141** (FIG. **3**). Since the halves **140** and **141** are symmetric about a vertical centerline for the vehicle, the fabrication technique discussed below will be directed only to the half **140**. The vehicle overhead guard half **140** comprises a sheet metal fabrication **142** including a main sidewall portion **144**, a bottom mounting flange **146**, front support flange **148**, a rear support flange **150**, a rear mounting tab **151**, a rear wall portion **152** and a top wall portion **154**. Breaking lines **155, 156, 157, 158** and **159** are provided between the main sidewall portion **144** and respective portions **146, 148, 150, 152** and **154**. The portions **146, 148, 150, 152** and **154** are folded inwardly along their respective break lines to form the symmetric half fabrication **140** of the overhead guard **16**. The mounting tab **151** is folded outwardly from the rear wall **152** of the fabrication **140** to provide a mounting plate for the overhead guard **16**. Prior to folding, the sheet **142** is stamped to provide cutout portions **160** therein, forming a protective grid for top and side portions of the guard to limit intrusion of foreign matter into the operator's compartment while providing sufficient operator visibility of the work environment. The half **141** comprises a sheet metal fabrication similarly cut, stamped and correspondingly folded to produce the symmetric left hand portion **141** shown in FIG. **13**. The halves **140** and **141** are secured together along a center seam **161** provided by welding sections **140,141** together. The front support flange **148** also includes a gusset portion **149** in an upper corner of the overhead guard for additional reinforcement and support. The guard is mounted on the side flanges **51** of the main frame **24** at front mounting sites **162** and rear mounting sites **164**, best seen in FIG. **12**. Unique energy absorbing qualities are provided for the overhead guard **16** by mounting assemblies **166** provided at mounting sites **162** and **164**. Mounting assemblies **166** include rubber cushions **167** mounted at sites **162** and **164** which substantially improve the vehicle's ability to withstand forces exerted thereon under roll-over conditions, and vibrationally isolate the operator's compartment from the main frame **27** of the vehicle **10** under normal operating conditions.

The machine's roll-over capability is best understood by a consideration of test results obtained for SAE test Nos. JT-394A and J-1040 and the SAE Test Manual is hereby incorporated by reference for a complete description of the testing method. Test results for the three types of loading required under the above-named tests are as summarized below:

1. Energy absorption capability — 22,179 inch-pounds.
2. Horizontal load capability — 2,842 pounds.
3. Vertical load capability — 6,000 pounds

A comparison of the above test results with SAE requirements reveals that the present vehicle, having an overhead guard mounted thereon which was designed and mounted as described above exceeded test requirements for a 6,000 pound vehicle. The gross vehicle weight of the skid steer loader of the present invention is slightly more than 3,000 pounds. Thus, the design of the present overhead guard substantially exceeds test requirements.

## HYDRAULIC SYSTEM

Referring now to the hydraulic system driving the vehicle, please see FIGS. **14** and **15**. First and second variable displacement pump units **85*a*,85*b*** are driven on a common shaft connected to the engine drive shaft. First and second pumps **85*a*,85*b*** are operatively connected by hydraulic lines **170** to first and second hydraulic motors **86,87** mounted on the transmission case of the vehicle.

Each of the first and second variable displacement pumps **85*a*,85*b*** includes a circular array of pistons and cylinders which revolve against swash plates which may be tilted by means of a control linkage (not shown) connected to respective controls **171,172** on the first and second pumps **85*a*,85*b*** to vary the displacement of the pumps **85*a*,85*b***. The control linkage is connected to control levers **25** on each side of the operator's seat **12** such that movement of either the right or left lever **25** will cause movement of control **171** or **172** so as to change the angle of the swash plate of either the pump **85*a*** or **85*b*** depending on the movement of the vehicle desired. It is understood of course, that the engine **81** will be driven at a constant rpm ordinarily and variable speed is attained by manipulation of the swash plate.

An implement pump **180** is axially aligned with the pumps **85*a*,85*b*** and is operatively connected by means of the hydraulic hoses **181** and **182** to a valve bank **183** which controls the lift and tilt cylinders **34,37** connected by a linkage (not shown) such as described in application Ser. No. 635,559 supra, to the control lever **25**. A separate hydraulic reservoir **185** (FIG. **4**) is provided to supply fluid as needed for the hydraulic components of the vehicle. Each of the motors **86,87** are provided with bleed-off lines **186,188** directing hydraulic fluid to a cooler **190**. The fluid is carried from the cooler to the inlet portion of the pump **180**.

Referring further to the valve bank **184**, valve ports **191,192** operate the lift cylinders **34** and valve ports **193,194** operate the tilt cylinder **37**. More fluid is required to extend the cylinders **34,37** than to retract them. Accordingly, additional fluid is drawn into the pump **180** from the reservoir **185** through lines **182**. When the cylinders are retracted an excess of oil is available. The excess oil is carried back to the reservoir through lines **195** to by-pass valve **208** through lines

182. Line 209 carries oil from outlet 184 of valve bank 183 through filter 210 to main pumps 85*a* and 85*b*.

The pump 85*b* and implement pump 180 are shown in more detail in FIG. 15. The pump 85*b* comprises a swash plate 201 mounted in the pump section 200. A series of revolving pistons 202 engage the face of the swash plate 201 in the pump section 200. Pistons 202 are caused to revolve by driving the engine input shaft and the displacement of each piston per revolution may be adjusted by varying the angle of tilt of the swash plate 201. It may be pointed out that the position of swash plate 201 shown in FIG. 15 is neutral, with no piston displacement per revolution. Reverse and forward displacement results when swash plate 201 is tilted. The output of pump unit 85*b* is directed to hydraulic motor 87 to cause rotation of the output shaft in either the forward or the reverse direction.

Normally the output shafts of pumps 85*b* and 180 are axially aligned with an oil seal therebetween to isolate the pumps from each other. Excess fluid passes from pump 85*b* to external piping carrying the fluid to the pump 180. In the present invention, pump inlet port 203 is provided between pumps 85 and 180 by removing the shaft oil seal therebetween, thus eliminating the need for fluid flow externally of the case of hydrostatic pump 85*b* to inlet port 204 of hydraulic auxiliary pump 180. Thus external piping from excess oil drain port 206 of pump 85*b* to inlet port 204 of pump 180 can be eliminated.

The vehicle shown and described thus presents an improved vehicle having a substantially lower profile, particularly suitable for low clearance applications. While only a single embodiment of our invention has been described in detail, it will be understood that the detailed description is intended to be illustrative only and that various modifications and changes may be made to our invention without departing from the spirit and scope of it, therefore the limits of the invention should be determined from the attached claims.

We claim:

1. A skid steer loader vehicle and vehicle main frame in combination, the main frame comprising laterally spaced, longitudinally extending side beams on opposite sides of the tractor centerline, crossmembers at opposite ends of the side beams, a relatively narrow and elongate transmission case mounted between the side beams to form a bottom wall, and an upper member disposed between the side beams to define a top wall of a lower compartment area of the frame and a bottom wall of an upper compartment area of the vehicle, the upper compartment comprising an operator's compartment disposed between the lift arms of the vehicle, including a seat portion mounted on the upper member, the relatively narrow transmission case having opposite side walls laterally displaced sufficiently from the side beams of the main frame so as to provide operator's space on opposite sides of the transmission case between the side beams and the case at a forward vertical extension of the upper compartment, an engine, hydraulic drive means powered by said engine contained within said lower compartment, a pair of spaced stub axles projecting from the sides of the elongate case at opposite ends of said case, wheels driven by said hydraulic drive means rotatably mounted on said stub axles, a pair of upright members disposed outwardly of said side beams and projecting upwardly from adjacent the rear of each side beam on each side of said engine and providing at the upper ends thereof respective pivotal mounts, and a boom assembly comprising a pair of lift arms pivotally attached at said pivotal mountings and extending forwardly along each side and downwardly at the front in the lowered position, the lift arms mounting a material handling means at the lower end thereof, whereby provision of operator's space on opposite sides of the transmission case forward of the seat enables the operator to straddle the transmission case when he is seated in the vehicle, thereby lowering the operator profile for the vehicle.

2. A skid steer loader vehicle and vehicle main frame as claimed in claim 1 including an enclosure disposed on the side beams of the frame, between the operator's compartment and the boom assembly of the vehicle, said enclosure having side, rear and top walls preventing access therethrough to the boom assembly, said walls defining the operator profile for the vehicle.

3. A skid steer loader vehicle main frame as defined in claim 1 wherein said stub axles sealably project through said side walls thereof into said transmission case and have respective wheel sprockets on the inner ends thereof, first and second chain drive means driveably connected to said sprockets and being driven by said hydraulic drive means powered by said engine contained within said compartment, the stub axles having support means mounted thereon and laterally spaced from the side walls of the case, said stub axles being secured to said side beams by transverse portions disposed between the support means and the case, the transverse means, forming a partial bottom wall for the upper compartment area of the main frame.

4. A skid steer loader vehicle and vehicle main frame as claimed in claim 3 wherein the hydraulic drive means includes hydraulic motors disposed on opposite sides of the transmission case, each motor mounted intermediate its respective set of wheels, the motors having output shafts carrying drive sprockets for the chain drive means drivably connected to the wheel sprockets for the front and rear wheels on each side of the vehicle, the chain and sprocket drive for each set of wheels on each side of the vehicle so arranged so that the drive sprocket adjacent the side wall of the case is drivably secured to the front wheel sprocket and the drive sprocket mounted at the end of each output shaft is drivably connected to the rear wheel sprocket of each set of wheels thereby providing a longer moment arm for forces exerted on the rear wheel of the vehicle.

5. A skid steer loader vehicle and vehicle main frame as defined in claim 1 wherein said side, end and bottom members define a center compartment for the vehicle, said crossmembers including a rear crossmember mounted between the side beams at the bottom thereof, said engine being mounted on the rear cross-member, said hydraulic drive means including a dual pump drive comprising first and second variable displacement pumps, each of which has a series of revolving pistons and cylinders rotatably driven on a common shaft attached to said engine, the forward portion of the pump drive being mounted on an upper surface of the transmission case and first and second hydraulic motors operatively connected with said first and second hydraulic motor mounted on opposite sides of the transmission case and driveably connected to said wheels.

6. A skid steer loader vehicle and vehicle main frame as claimed in claim 1 wherein additional crossmembers comprise top crossmembers overlying the engine and hydraulic drive means, and forward panels extending downwardly from said upper member to engage the

transmission case at a forward end thereof, and a rear closure extending between the side beams at the rear of the main frame to substantially enclose the engine and hydraulic drive means to thereby provide an acoustically insulated enclosure for the engine and drive means of the vehicle.

**7.** A tractor vehicle and vehicle main frame as claimed in claim **6** wherein the engine is mounted at the rear of the center compartment substantially between the uprights of the main frame of the vehicle, and the enclosure comprises a top crossmember extending between the uprights at the top thereof, a forward crossmember coextensive with the top crossmember substantially equal in width to the distance between the uprights of the vehicle and extending downwardly therebetween, a seat pan mounted between the side beams of the main frame and coextensive with the forward crossmember provided between the uprights of the main frame and extending forwardly thereof, downwardly extending front panels secured at the top thereof to the seat pan and at the bottom thereof to the transmission case forming the front of the engine compartment, and a rear closure comprising a rear door mountable on one of the uprights and lockable on the other of the uprights to complete the enclosure for the engine and hydraulic drive means of the vehicle, the rear door and the rear top crossmember having louvres provided therein to dissipate engine heat and noise outwardly from the engine compartment and away from the operator compartment of the vehicle.

**8.** A tractor vehicle and vehicle main frame as claimed in claim **1** wherein the lift arms extend forwardly along each side of the vehicle and substantially overlie the wheels of the vehicle, the front end portion of the lift arms extending forwardly and downwardly to lie forwardly of the front wheel of the vehicle in the lowered position, said lift arms being arcuately proportioned to conform to the contour of the front wheel of the vehicle.

**9.** A tractor vehicle and vehicle main frame as claimed in claim **8** wherein the boom assembly includes first pivotal mounting means at the forward end of the lift arms, each of the lift arms comprise a longitudinal portion and a downwardly extending forward portion, a lateral crossmember provided between the lift arms at the juncture of the longitudinal portion of the lift arm and the forward portion of the lift arm, second pivotal mounting means provided on the crossmember, and material handling means secured to said lift arms at said first and second pivotal mounting means.

**10.** A tractor vehicle and vehicle main frame as claimed in claim **9** wherein the material handling means comprises an implement handling apparatus mounted on the boom at said first pivotal mounting means, and said second pivotal mounting means comprises a mounting bracket mounted at the midportion of the boom crossmember, pivotal mounting means carried on said bracket, and tilt means connected at one end thereof to the pivotal mounting means on the bracket and at an opposite end thereof to third pivotal mounting means provided on the implement handling apparatus.

**11.** A tractor vehicle and vehicle main frame as claimed in claim **1** wherein an operator's compartment is disposed on the side beams of the main frame, and protective means are provided for the operator's compartment comprising an enclosure mounted on the side beams of the main frame, said enclosure having side, top and rear walls and including means for preventing access thereto, thereby to isolate the operator's compartment from other structural elements of the vehicle.

**12.** A skid steer loader vehicle comprising a sub-frame including a relatively narrow, elongate transmission case having side walls, a bottom wall and a top wall, a pair of stub axles spaced, one axle behind the other, at opposite ends of the case and projecting outwardly from each side, tubular axle housings rigidly secured to said side walls and surrounding said stub axles, a mounting boss on each of the said tubular axle housing, and including drive means mounted on the outside thereof and on opposite side walls thereof, a loader main frame comprising laterally spaced, longitudinally extending side beams and crossmembers at each end defining a generally rectangular interior compartment for receiving and partially surrounding said case, said interior compartment also receiving an engine and hydraulic drive means for the vehicle, said side beams having longitudinally spaced mounting locations for mounting on said mounting bosses for securing said case on to the body, the side walls of the case being laterally spaced sufficiently from the side beams of the frame to provide operator's space on opposite sides of the transmission case between the side beams and the case, upright member projecting upwardly from adjacent the rear of said side beam and extending outwardly thereof, said upright members providing at the upper end thereof a pair of pivotal mountings, a boom assembly comprising a pair of lift arms pivotally attached at said pivotal mountings and extending forwardly along each side and downwardly at the front in the lowered position, the lift arms mounting a material handling means at respective lower ends thereof.

**13.** A skid steer loader vehicle as claimed in claim **12** wherein the drive means includes drive motors for vehicle chain and sprocket drives carried within the case mounted on the side walls of the case, variable displacement pumps driven by a common shaft mounted on the engine and driving said drive motors, the drive motors providing gear reduction means for the hydraulic output of the pumps.

**14.** A skid steer loader vehicle as claimed in claim **13** wherein the drive motor includes an output shaft projecting to the interior case, said output shaft carrying thereon front and rear drive sprockets for each set of wheels, the front drive sprocket disposed adjacent the side wall of the case on the output shaft and drivably connected by an endless chain to the wheel sprocket for the front wheel, the drive sprocket for the rear wheel laterally displaced from the side wall of the case at the end of the output shaft, the rear drive sprocket being drivably connected by an endless chain to the wheel sprocket for the rear wheel for each set of wheels for the vehicle, thereby providing a longer moment arm for the forces exerted on the rear wheel of the vehicle.

**15.** A skid steer loader vehicle and vehicle main frame in combination, the main frame comprising laterally spaced, longitudinally extending side beams on opposite sides of the tractor centerline, crossmembers at opposite ends of the side beams, a relatively narrow, elongate transmission case mounted between the side beams to form a portion of a bottom wall, extending along the vehicle centerline, the side walls of the case being laterally spaced sufficiently from the side beams to provide operator's space on opposite sides of the transmission case between the side beams and the case, and an upper member disposed between the side beams to define the top wall of a center compartment area of the frame, an

engine and hydraulic drive means powered by said engine contained within said center compartment, a pair of upright members disposed outwardly of said side beams and projecting upwardly from adjacent the rear of each side beam on each side of said engine, the upper member comprising top crossmembers overlying the engine and hydraulic drive means, forward panels extending downwardly from said upper member at the front end thereof to engage the transmission case at a forward end thereof and close the front end of the compartment, and a rear closure extending between the side beams at the rear of the main frame to substantially enclose the engine and hydraulic drive means thereby providing an acoustically insulated enclosure for the engine and drive means of the vehicle.

**16.** A skid steer vehicle and main frame as claimed in claim **15** wherein said side, end and bottom members define a center compartment for the vehicle, said crossmembers including a rear crossmember mounted between the side beams at the bottom thereof, said engine being mounted on the rear crossmember, said hydraulic drive means including a dual pump drive comprising first and second variable displacement pumps, the forward portion of the pump drive being mounted on an upper surface of the transmission case and first and second hydraulic drive motors operatively connected with respective pumps of the pump drive mounted on opposite sides of the transmission case and driveably connected to said wheels.

* * * * *