US006789291B2

(12) **United States Patent**
Velinsky et al.

(10) **Patent No.: US 6,789,291 B2**
(45) **Date of Patent: Sep. 14, 2004**

(54) **TELEROBOTIC NOZZLE POSITIONING SYSTEM FOR AN AUTOMATED ROADWAY DEBRIS VACUUM VEHICLE**

(75) Inventors: **Steven A. Velinsky**, Davis, CA (US); **Wilderich A. White**, Davis, CA (US); **Andrew A. Porterfield**, Benecia, CA (US)

(73) Assignee: **The Regents of the University of California**, Oakland, CA (US)

(*) Notice: Subject to any disclaimer, the term of this patent is extended or adjusted under 35 U.S.C. 154(b) by 297 days.

(21) Appl. No.: **10/056,993**

(22) Filed: **Jan. 23, 2002**

(65) **Prior Publication Data**

US 2002/0157212 A1 Oct. 31, 2002

Related U.S. Application Data

(60) Provisional application No. 60/286,813, filed on Apr. 25, 2001.

(51) **Int. Cl.**[7] **A47L 9/24**; E01H 1/08

(52) **U.S. Cl.** **15/414**; 15/340.1; 406/39

(58) **Field of Search** 15/315, 340.1, 15/347, 414; 406/39, 41–43

(56) **References Cited**

U.S. PATENT DOCUMENTS

3,150,404	A		9/1964	Johnson	
3,348,258	A	*	10/1967	Daneman	15/314
3,444,581	A		5/1969	Daneman	
3,913,307	A		10/1975	Cardinal, Jr.	
4,019,219	A		4/1977	Willenborg	
4,068,824	A		1/1978	Flynn	
4,207,647	A	*	6/1980	Masters	15/302
4,277,214	A		7/1981	Mahle et al.	
4,659,262	A		4/1987	van Aalst	
4,661,680	A		4/1987	Swensrud	
4,995,138	A	*	2/1991	Pullen	15/340.1
5,050,265	A	*	9/1991	Stout et al.	15/340.1
5,138,742	A		8/1992	Charky	
5,265,132	A		11/1993	Zollinger	
5,983,447	A		11/1999	Boomgaarden	
5,996,174	A		12/1999	Boomgaarden et al.	
6,092,261	A		7/2000	Boomgaarden	
6,158,926	A	*	12/2000	Precetti	406/39

FOREIGN PATENT DOCUMENTS

DE	94 14 721 U	10/1994
DE	295 08 588 U1	8/1995
EP	0 485 810 A1	2/1992

* cited by examiner

Primary Examiner—Terrence R. Till
(74) *Attorney, Agent, or Firm*—John P. O'Banion

(57) **ABSTRACT**

A telerobotic nozzle positioning system for a mobile debris vacuum vehicle or for fixed particulate vacuuming applications. The apparatus has a vacuum source coupled to an adjustable boom and nozzle assembly. The nozzle assembly is mounted to the boom with a compliant upper joint that will allow the nozzle assembly to withstand impacts with obstructions without shearing the nozzle assembly from the boom. A base with an extensible fly is pivotally coupled to the upper joint and can swing with respect to the joint upon actuation of a short stroke hydraulic cylinder. The distal end of the extendable fly has a nozzle bracket assembly with a nozzle bracket, flexible hose and nozzle tip. The nozzle bracket and nozzle tip can pivot with respect to the fly. A pair of long hydraulic cylinders allows the extension of the fly from the base as well as rotation of the nozzle bracket and tip.

63 Claims, 19 Drawing Sheets

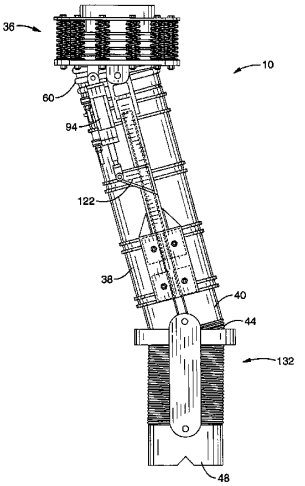

Exhibit #
E
01/06/25 - PA
exhibitsticker.com

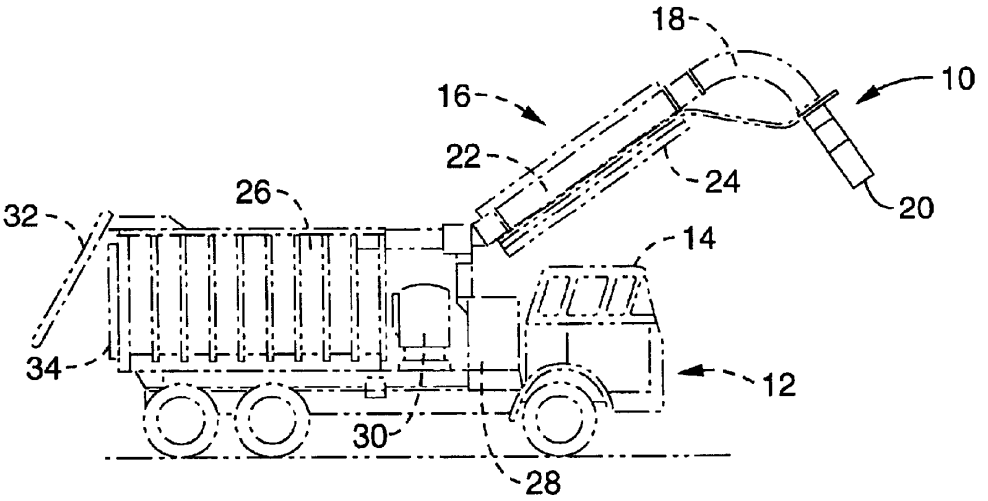

FIG. 1

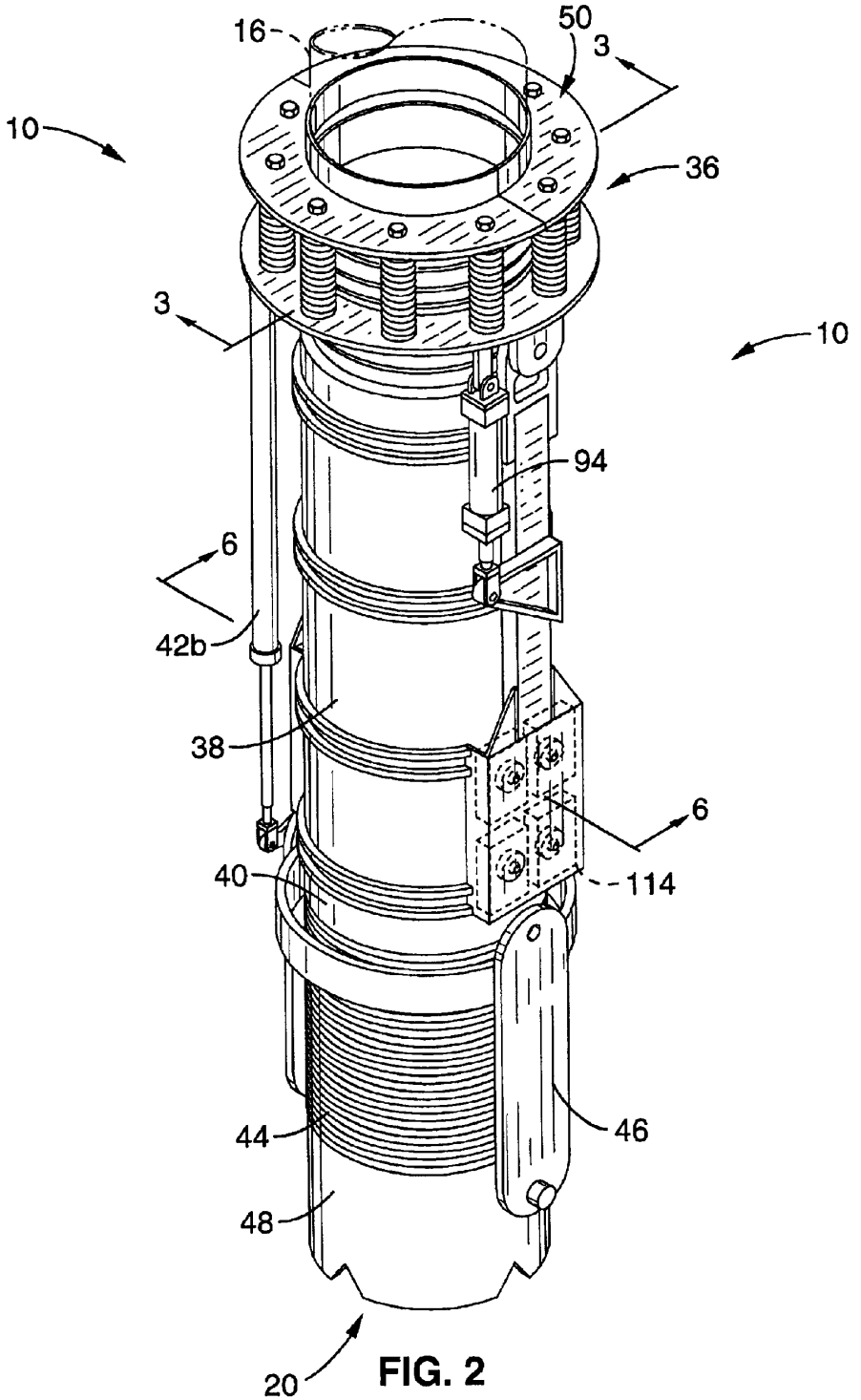

FIG. 2

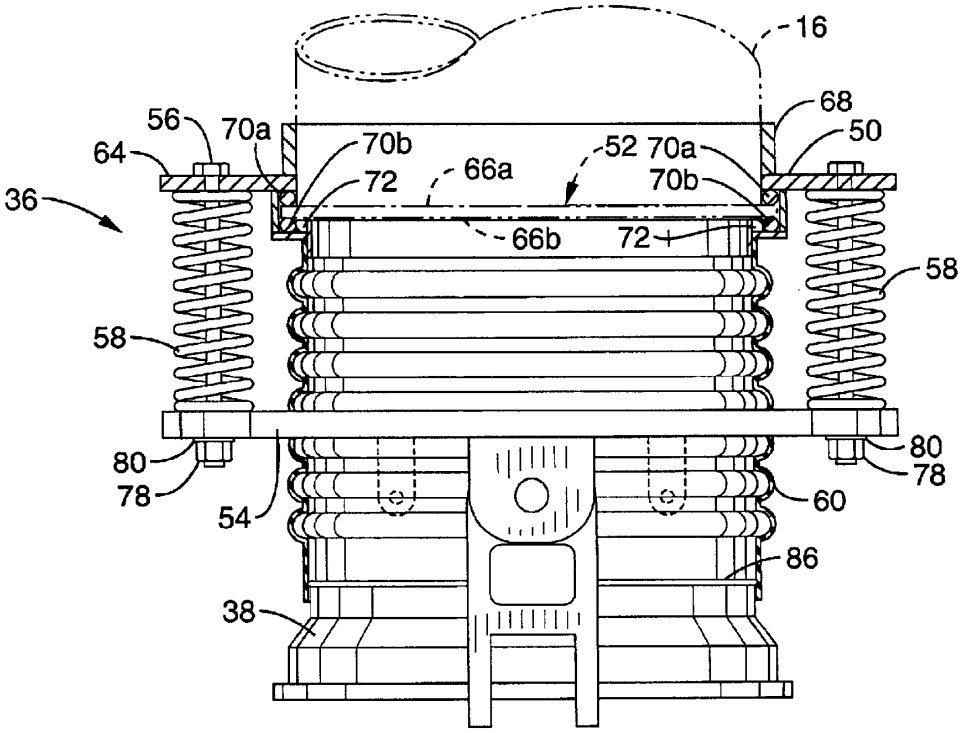
16
68
56
70a
70b
52
70a
50
64
66a
72
70b
36
66b
72
58
58
80
80
78
78
54
60
86
38

FIG. 3

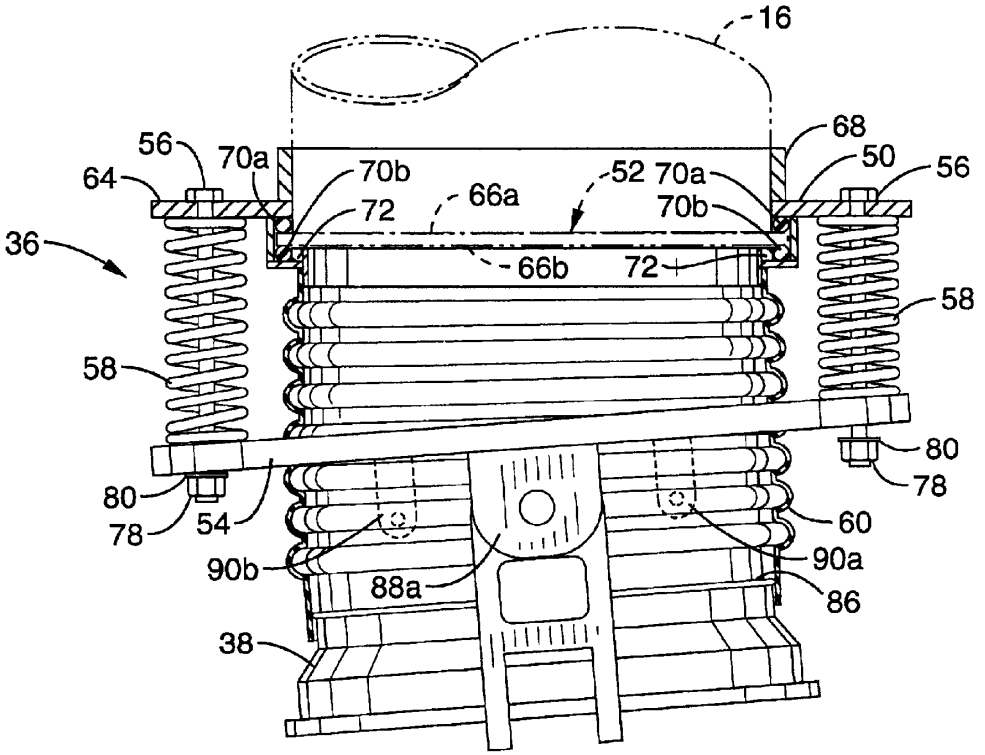
16
68
56
70a
50
56
64
70b
52
70a
66a
70b
72
36
66b
72
58
58
80
80
78
78
54
60
90b
90a
88a
86
38

FIG. 4

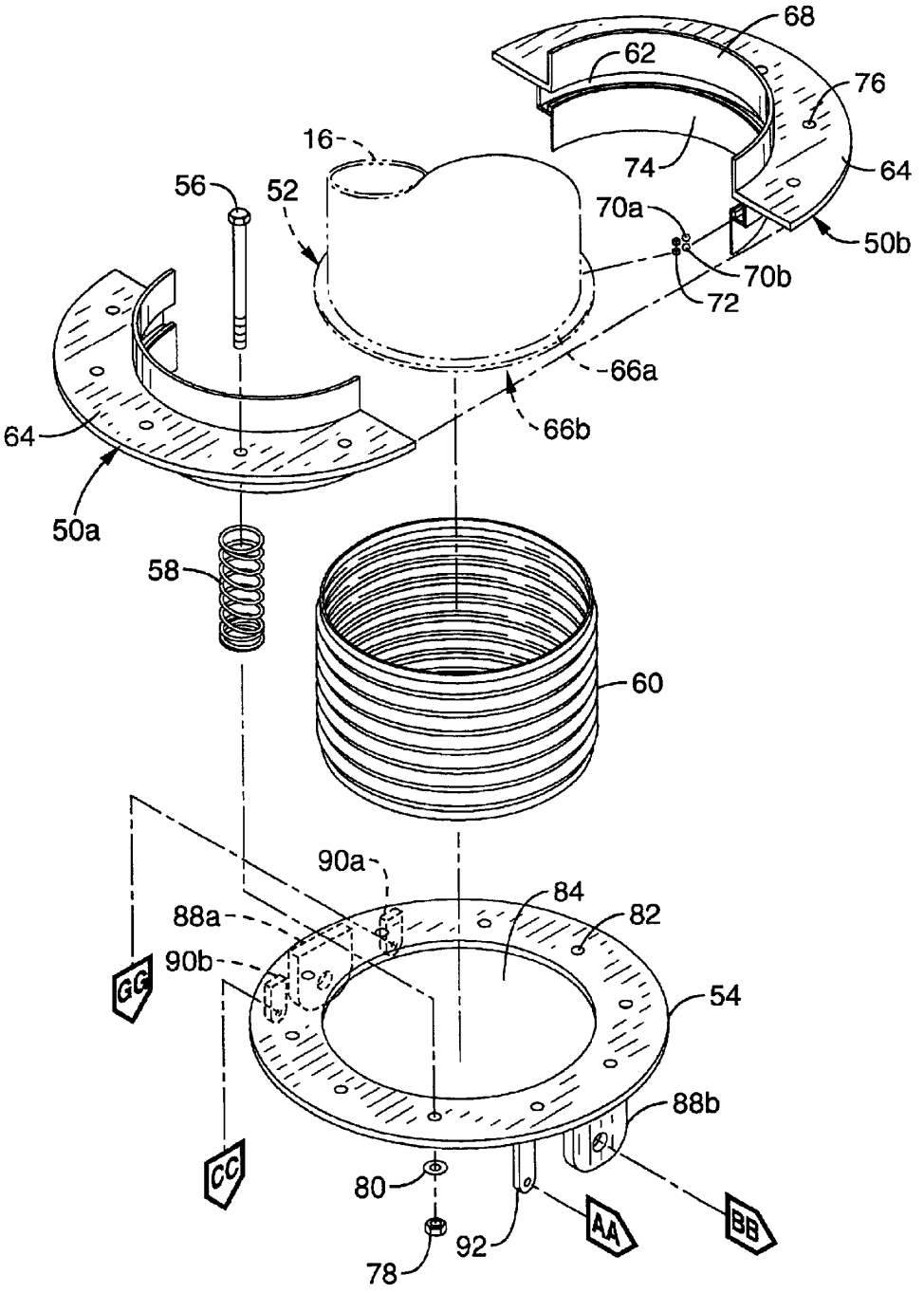
68
62
76
16
74
64
56
52
70a
50b
70b
72
66a
66b
64
50a
58
60
90a
84
88a
82
90b
GG
54
88b
CC
80
AA
BB
92
78

FIG. 5A

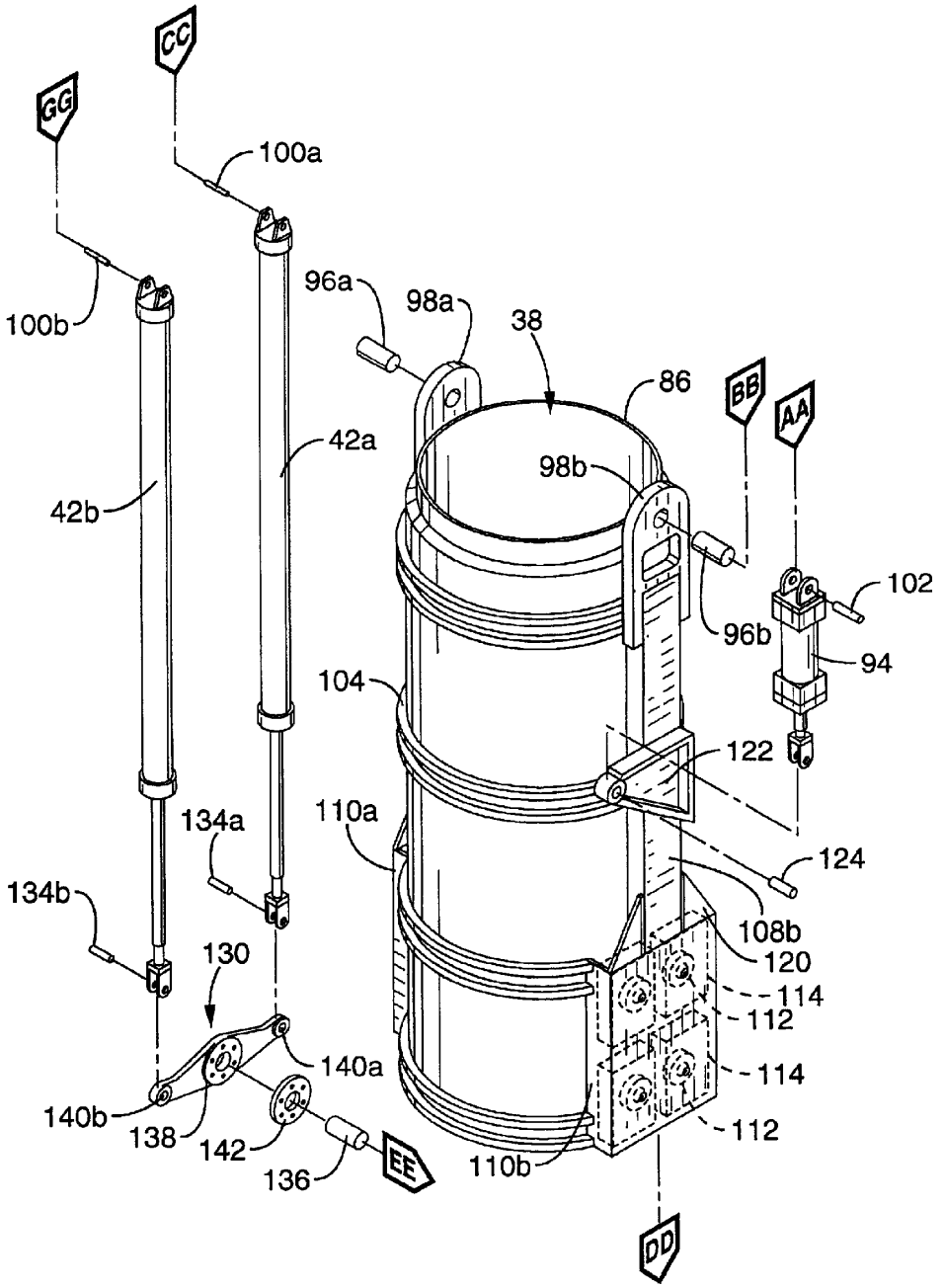
CC
GG
100a
100b
96a
98a
38
86
BB
AA
42a
42b
98b
102
96b
94
104
122
134a
110a
124
134b
108b
130
120
114
112
140a
114
140b
138
142
112
136
EE
110b
DD

FIG. 5B

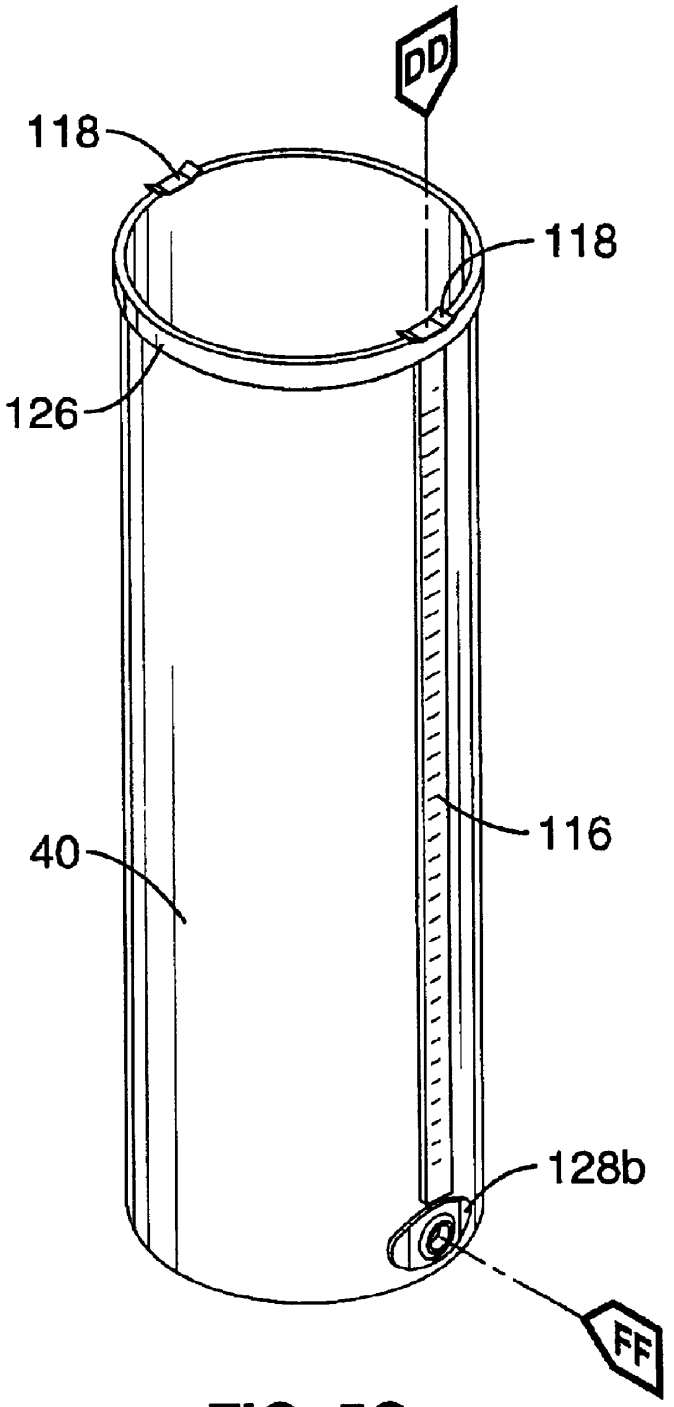

FIG. 5C

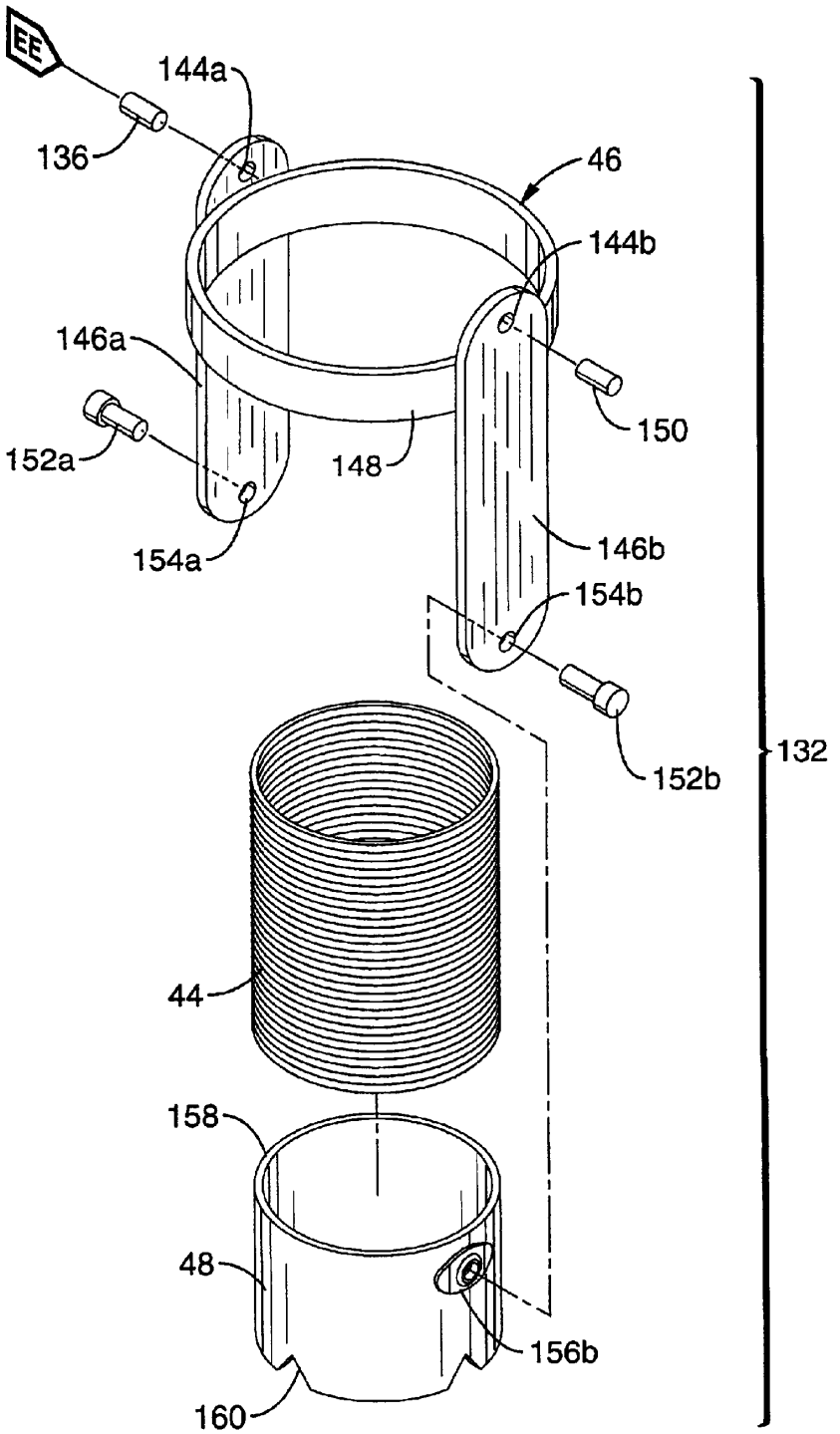
EE
144a
136
46
144b
146a
150
152a
148
154a
146b
154b
152b
132
44
158
48
156b
160

FIG. 5D

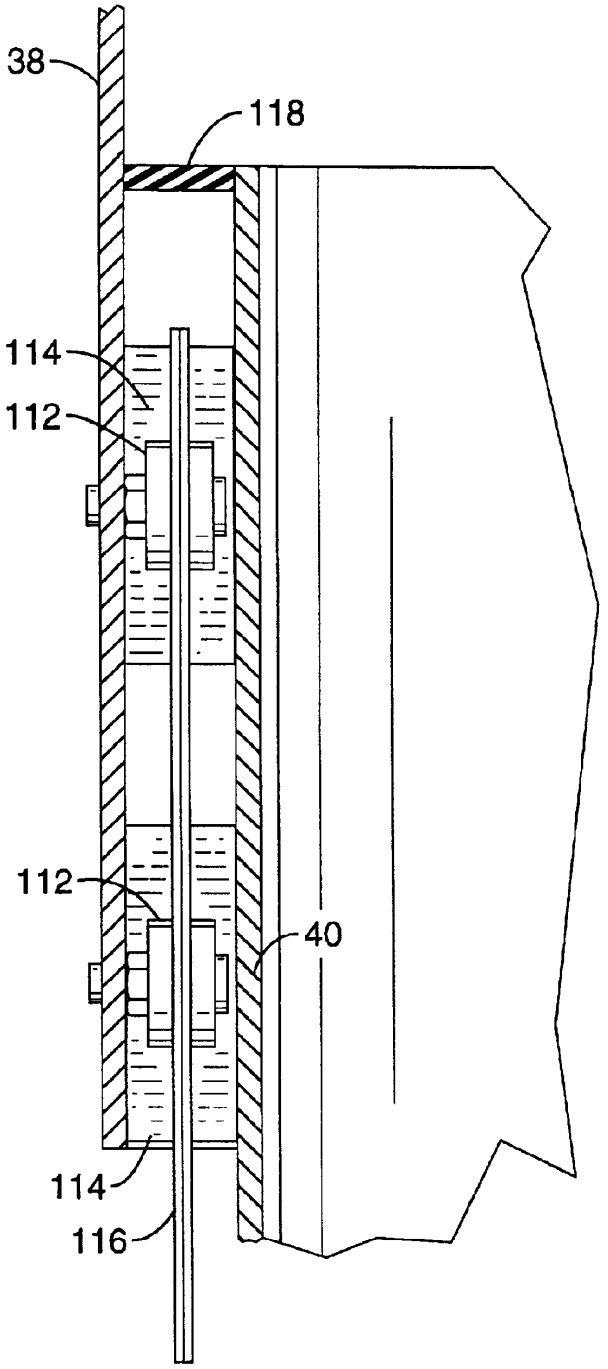

FIG. 6

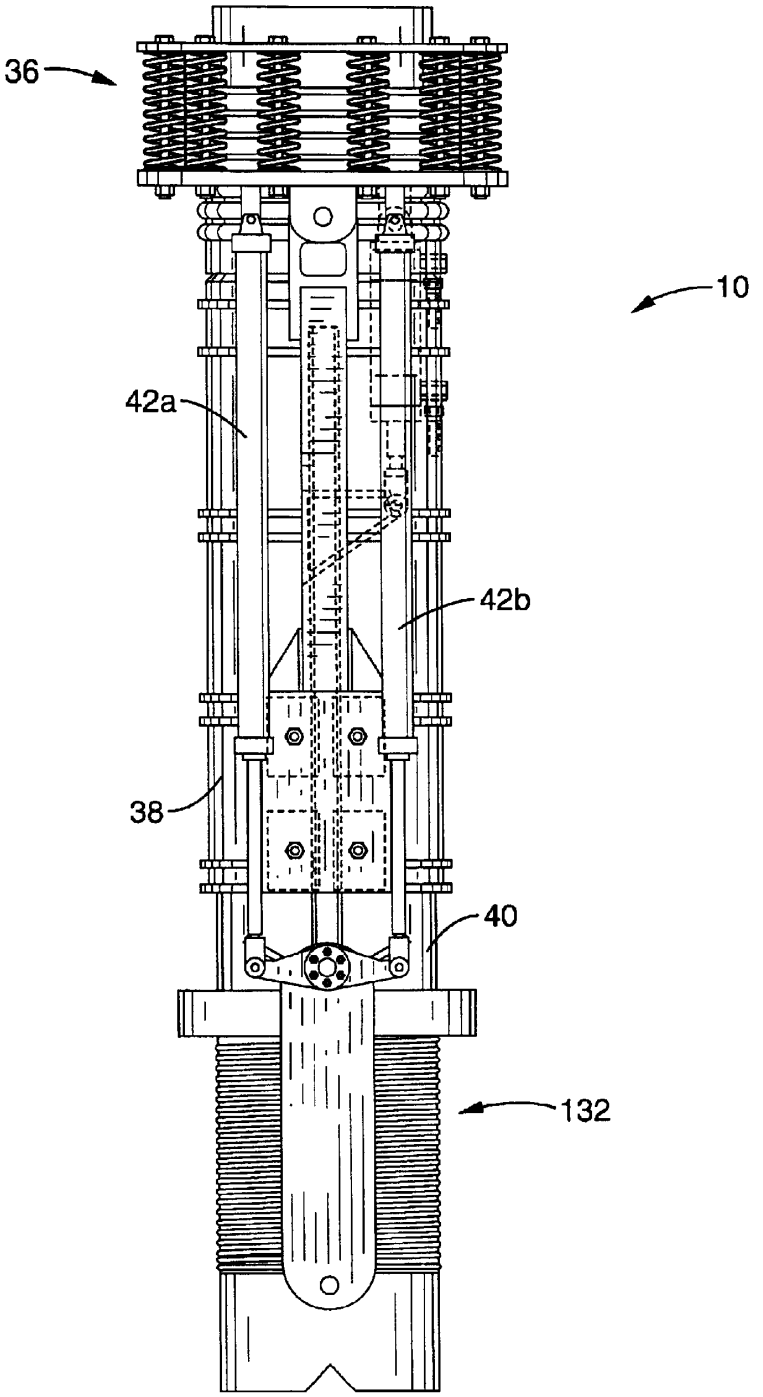

FIG. 7

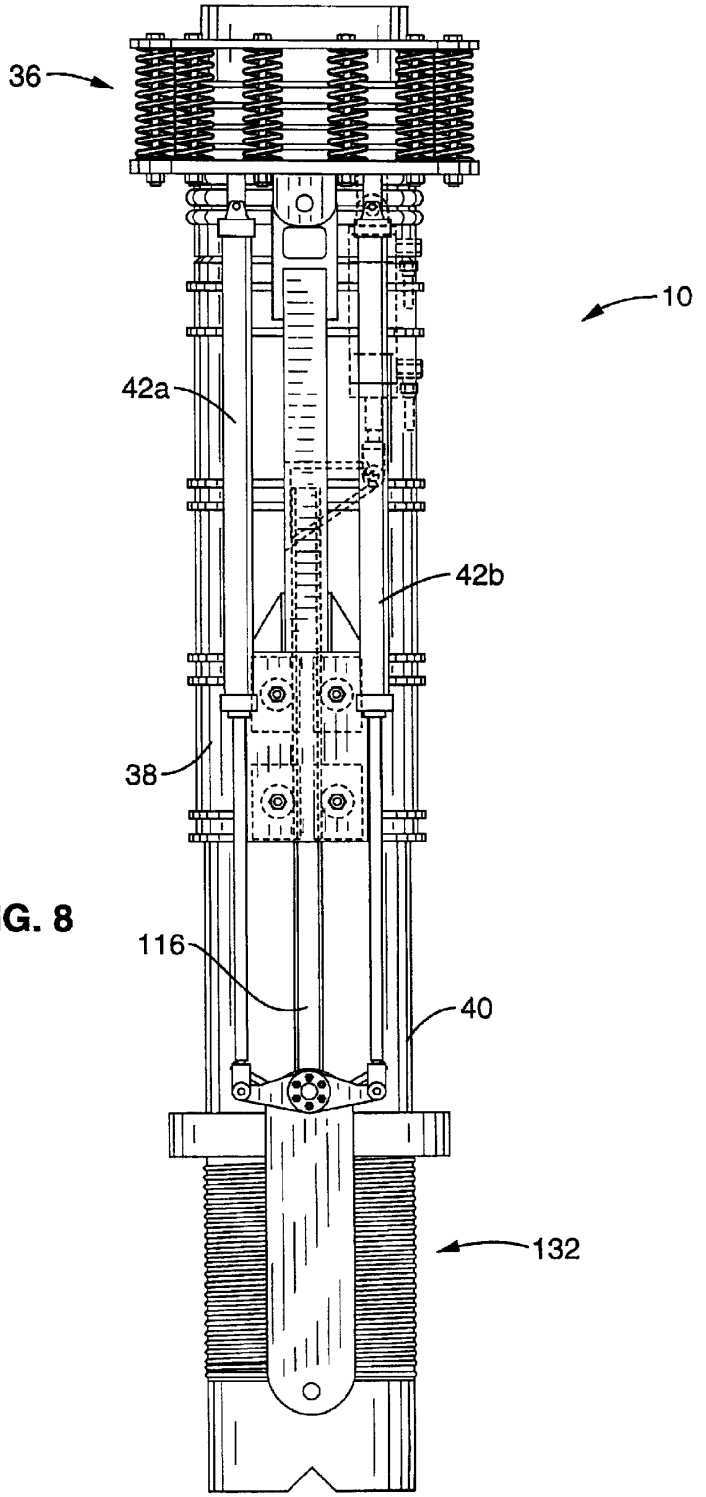

FIG. 8

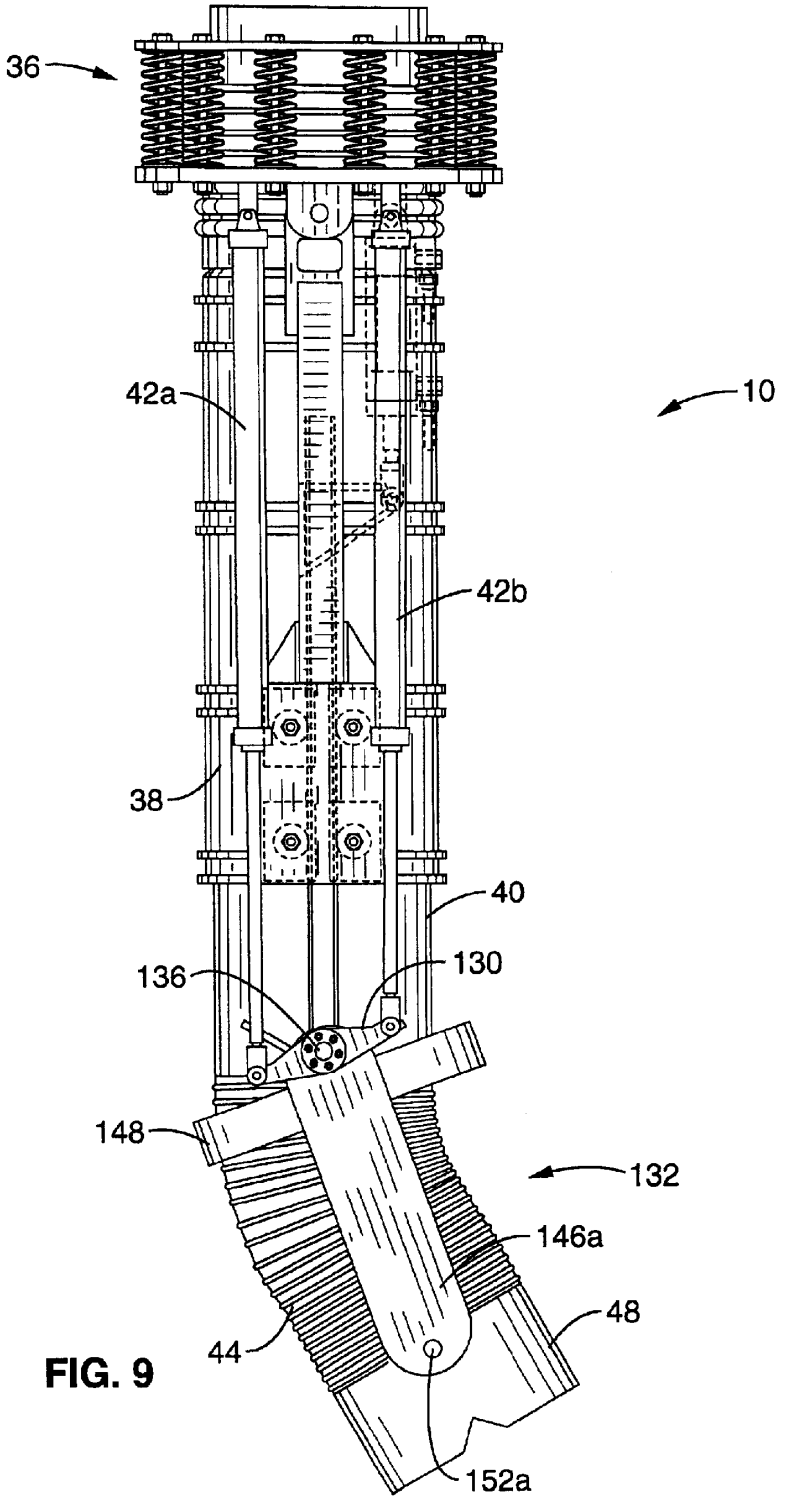

FIG. 9

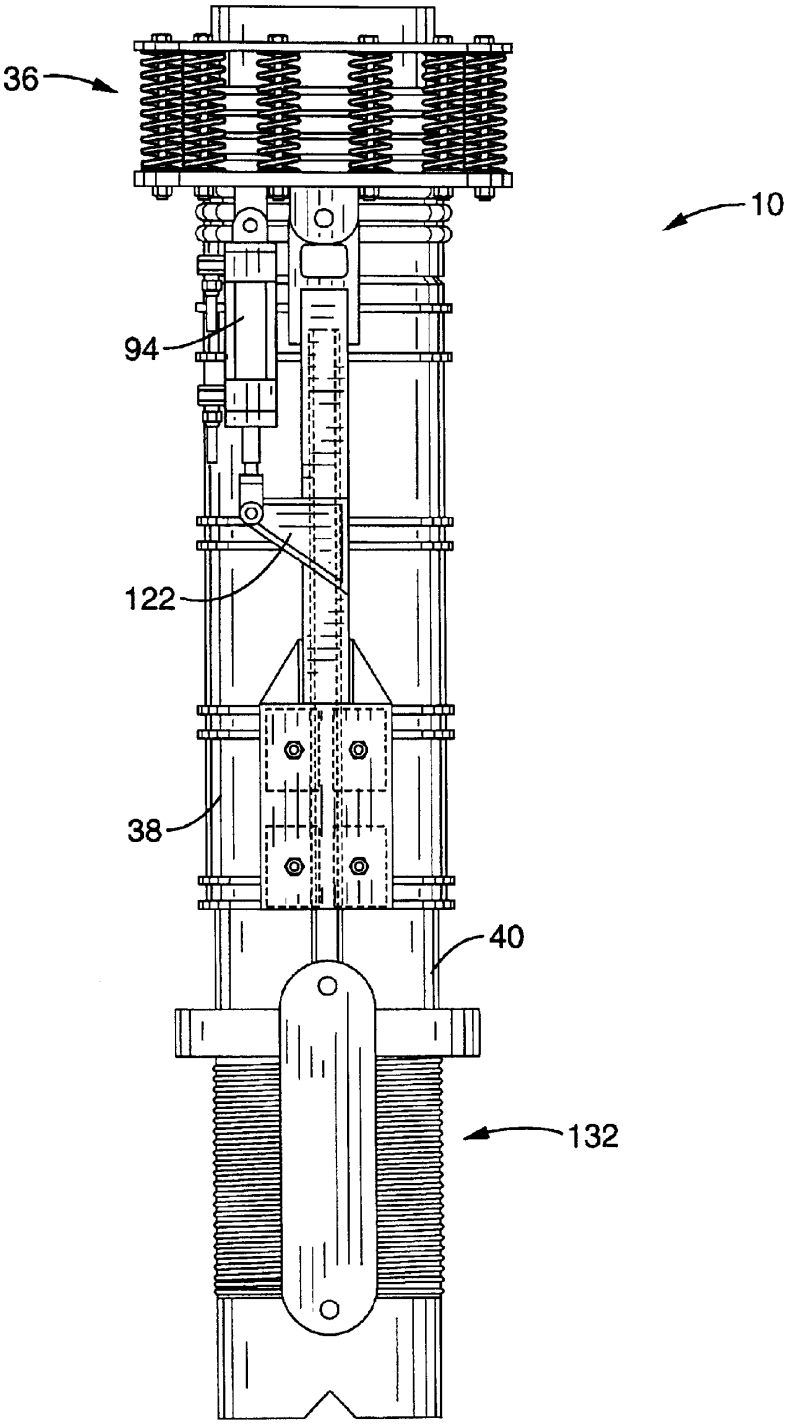

FIG. 10

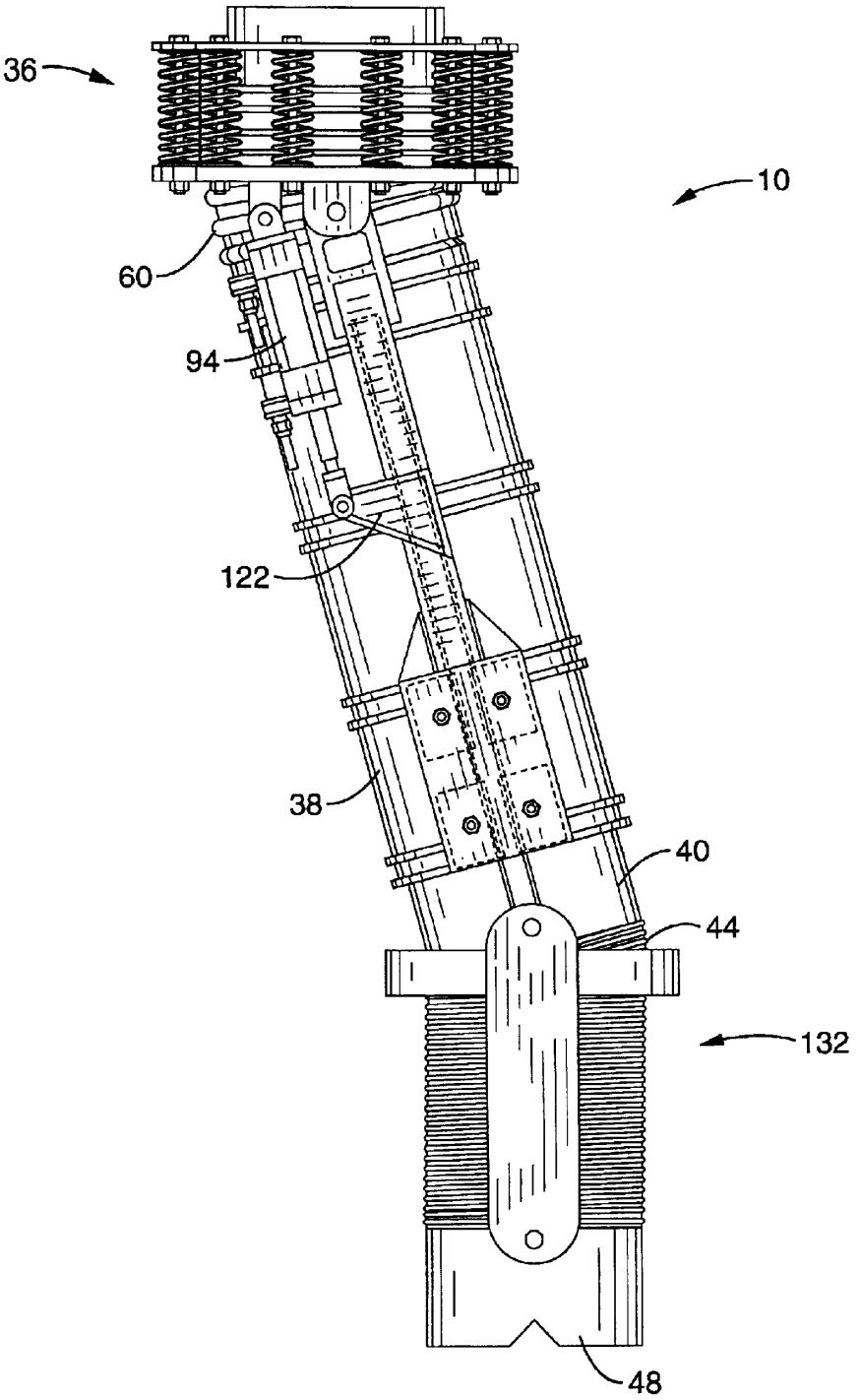

FIG. 11

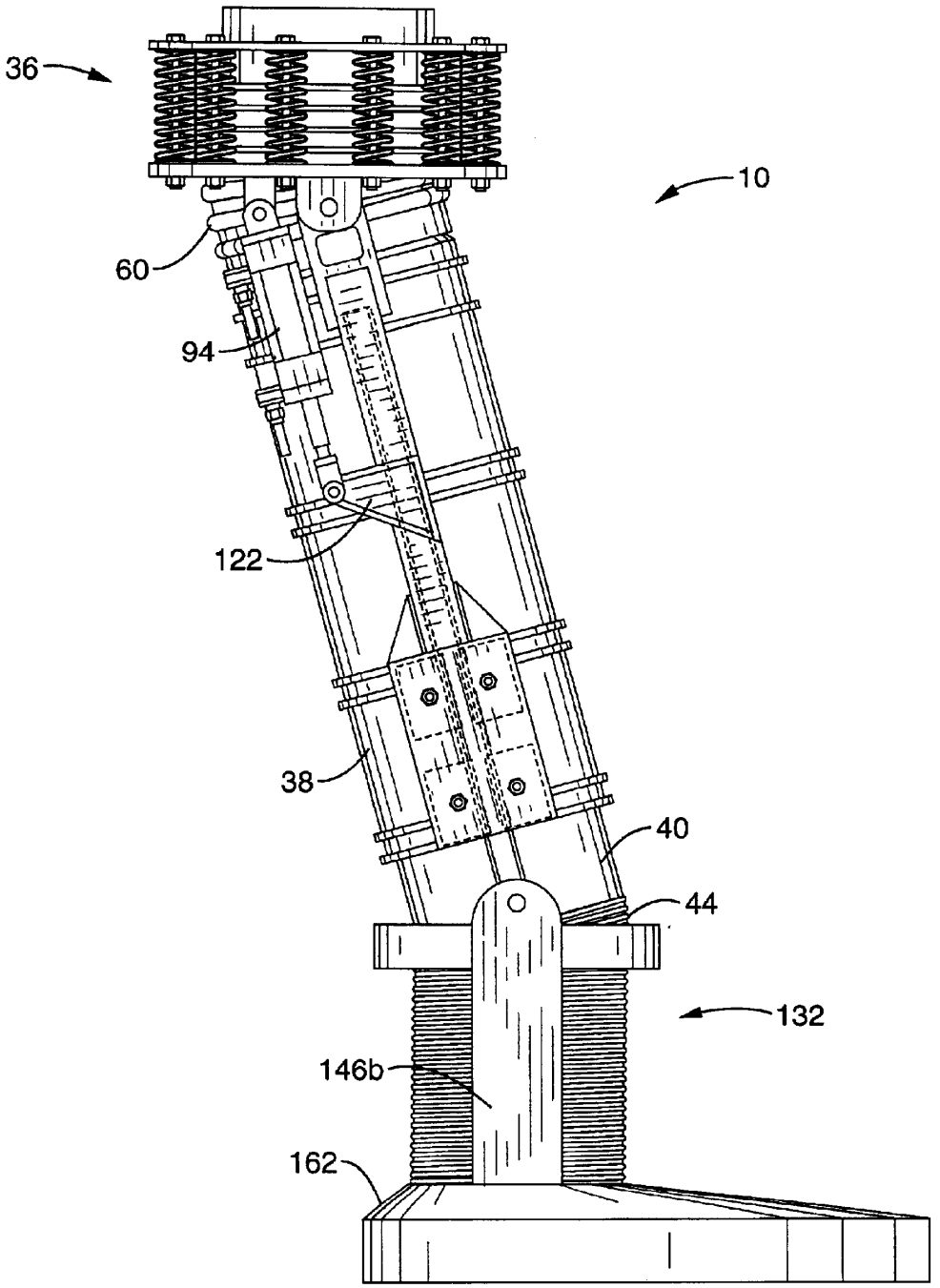

FIG. 12

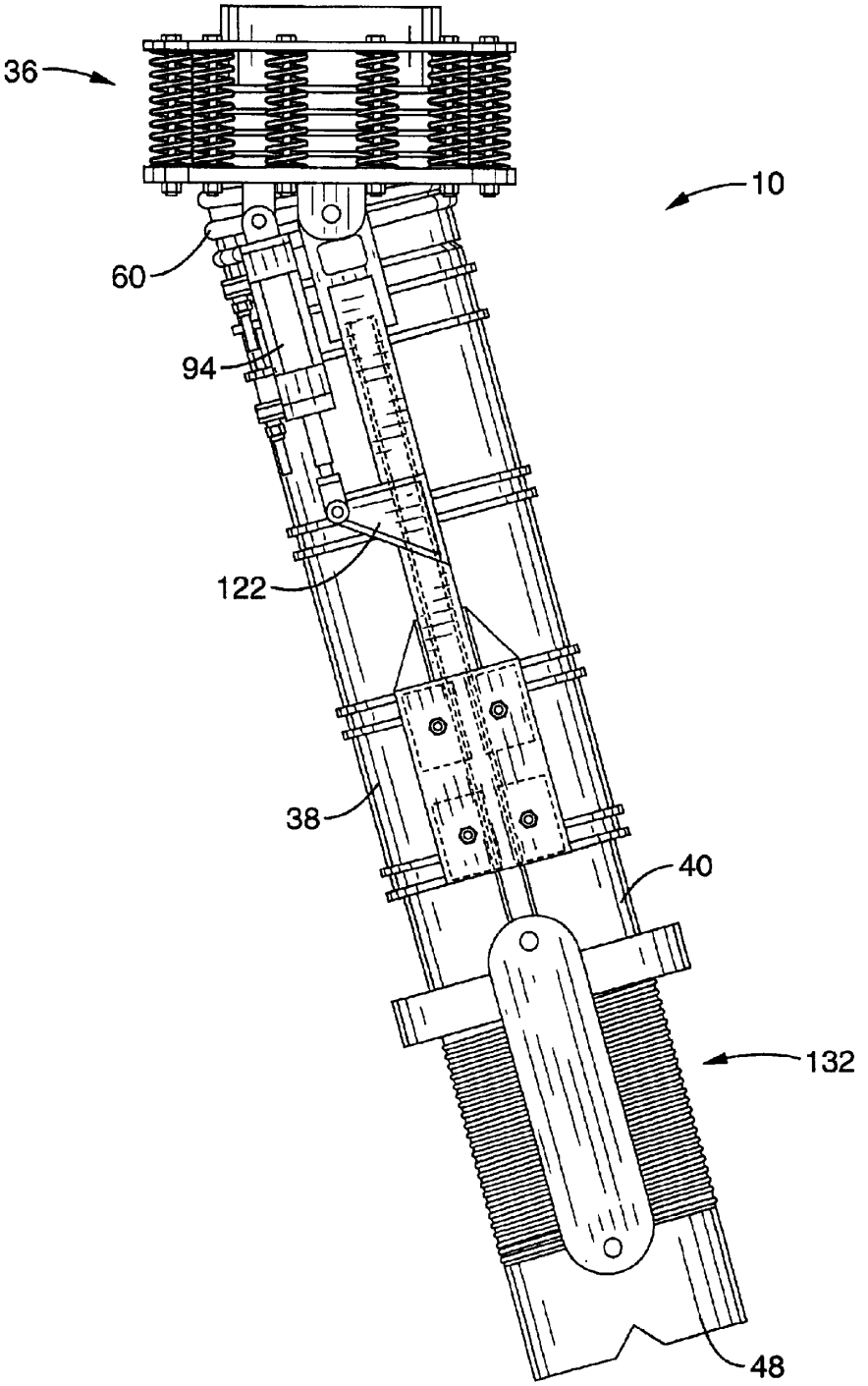

FIG. 13

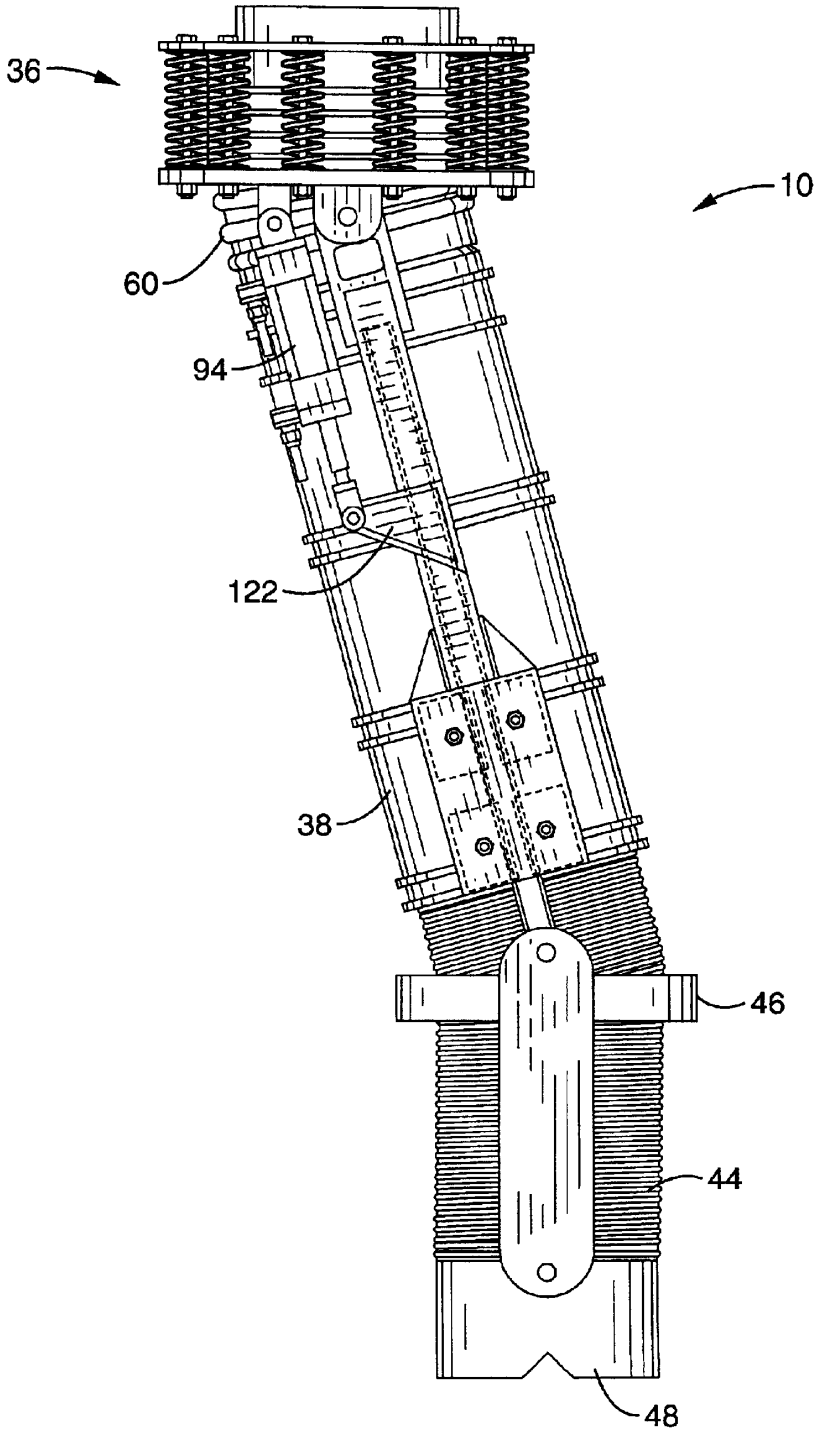

FIG. 14

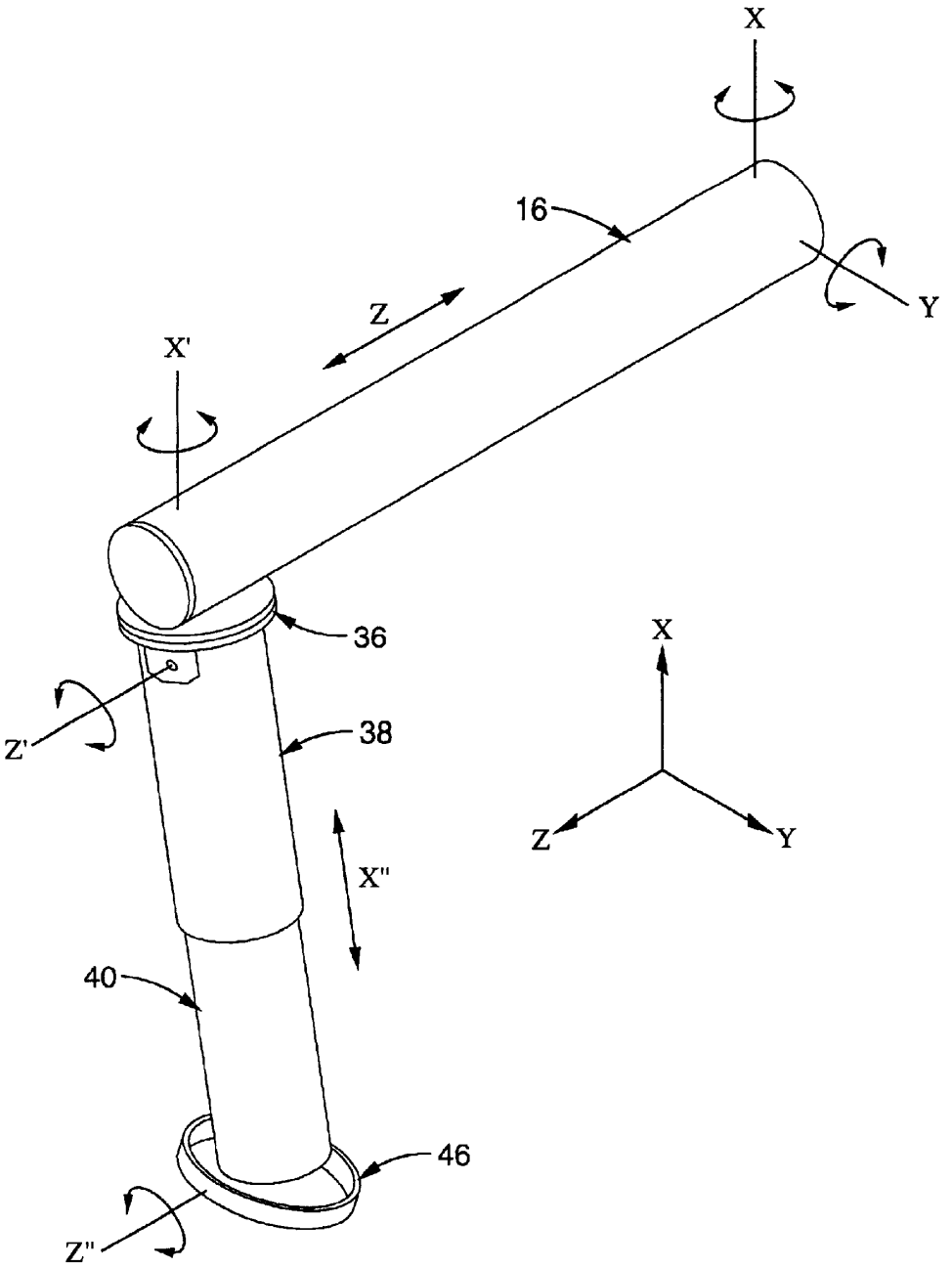

FIG. 15

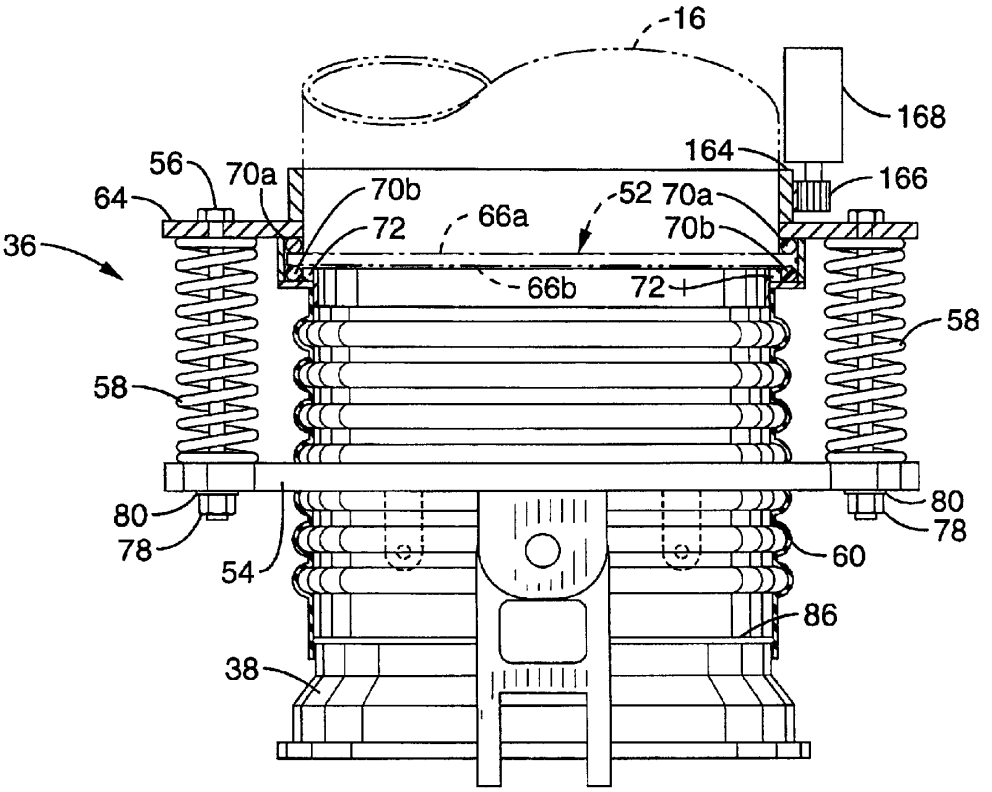
16
168
164
166
56
70a
64
70b
52
70a
66a
72
70b
36
66b
72
58
58
80
78
80
78
54
60
86
38

FIG. 16

TELEROBOTIC NOZZLE POSITIONING SYSTEM FOR AN AUTOMATED ROADWAY DEBRIS VACUUM VEHICLE

CROSS-REFERENCE TO RELATED APPLICATIONS

This application claims priority from U.S. provisional application serial No. 60/286,813 filed on Apr. 25, 2001, incorporated herein by reference.

STATEMENT REGARDING FEDERALLY SPONSORED RESEARCH OR DEVELOPMENT

This invention was made with Government support under Contract No. RTA 65A0039, awarded by the Department of Transportation. The Government has certain rights in this invention.

REFERENCE TO A COMPUTER PROGRAM APPENDIX

Not Applicable

BACKGROUND OF THE INVENTION

1. Field of the Invention

This invention pertains generally to stationary and portable vacuum devices, and more particularly to a dexterous telerobotic hose and nozzle positioning system for an automated roadway debris vacuum vehicle.

2. Description of the Background Art

Urbanization has required increasingly complex systems of motorways to accommodate the movement of automotive traffic. Motorway litter comes from many sources including careless drivers and poorly covered waste hauling vehicles with open trailers.

The presence of litter on urban and suburban roadways is not only displeasing to the eye, it can be hazardous to passing motorists as well as to the environment. Collections of roadway debris often block the flow of run-off water to storm drains thereby developing flood conditions during rainy days. Litter is also blown into wildlife reserve areas, cluttering habitats, and items such as disposed automobile oil containers can contaminate plant and animal life. Some items may even be shredded and scattered over larger areas as seasonal mowing takes place by road crews to control plant growth to minimize fire hazards.

Roadway debris, such as glass shards and steel materials, can also create hazardous conditions for motorists from tire damage or through attempts to avoid the debris. Motorway debris typically consists of cardboard, rubber, plastic, glass, aluminum, steel, soil from road sweepings, lumber, dead animals, household garbage and paper in all shapes and sizes. Litter items like paper and wood will decompose over time, however other debris may be noticeable for years. Dead animals that are found on roadways will foul the air and present unsightly views for passing motorists if not removed. Some steel items such as mufflers and hub caps may take an exceptionally long period of time decompose, while plastics and rubber may not do so at all. All of these items must be removed from the roadway and disposed of properly.

Major litter accumulation areas on roadways are those nearest to on-ramps accessing fast-food establishments, along roads that lead to waste facilities, and in public rest areas. Bushes, shrubs, trees, and guardrails often catch this litter and allow it to collect in piles. Predictably, litter

concentrations tend to increase in areas with higher population densities.

The cost to local and regional governments for litter removal is substantial. States spend millions of dollars per year to remove refuse from public roadways. State transportation departments must often delay material and machinery purchases as well as personnel decisions due to the drain on public funds caused by the costs of litter removal. Moreover, roadway maintenance and resurfacing activities are often delayed for litter to be removed and require the diversion of resources and workmen.

Litter removal efforts often consist of crews of workers that enter median and right-of-way areas near roadways to manually remove litter and trash that has collected over time. Clean up crews work dangerously close to high-speed traffic and are therefore exposed to injuries from the debris this traffic generates while they manually remove small articles of trash from roadways placing one item at a time into garbage bags for subsequent collection. Such crews may also restrict the flow of freeway traffic during daytime peak traffic periods.

Street sweepers with rotating broom elements, known in the art, are designed to operate on paved surfaces, and can pick up dirt, mud, leaves, paper, light cans and bottles. Sweepers can drive to a worksite and begin operation without on-site manual set-up. Many of these sweepers carry water, which is sprayed to control the dust produced by their rotating gutter and pick-up brooms. However, uneven road surfaces may permit gaps to form between either the vacuum plenum or pick-up broom and the roadway, decreasing the vehicle's cleaning effectiveness and leaving behind some litter items. Street sweepers cannot generally operate in unpaved shoulder areas without picking up significant amounts of dirt or vegetation. Doing so will unnecessarily and prematurely fill the vehicle's storage bin and create undesirable dust clouds.

Small capacity mobile vacuum devices were later developed that utilize a flexible hose that can pick up papers, leaves and other light weight refuse. However, the small overall size of these machines and their low top speed do not provide adequate operator protection from high-speed automobile traffic. Furthermore, the limited litter storage capacity requires multiple trips away from the worksite to empty the storage bin. Additionally, litter items such as cans, bottles, and rubber tire segments often cause damage to the impeller and drive motors in these small capacity machines due to jamming and clogging. Accordingly, such machines are unacceptable for use in freeway medians and shoulders.

There are also several large, high power suction vehicles designed for gutter, sewer, and culvert cleaning known in the art. These machines generally have large waste storage bins and substantial suction power, along with the capacity to carry and pump water to break up clogs in culverts and sewers. Such machines can develop enough suction to easily remove sludge, rocks, and sections of broken pavement from otherwise difficult to access depths. However, these machines typically require on-site manual set-up and use, where the operator must position the vehicle close to the intended worksite. The operator must stand outside the vehicle to manipulate the water and suction hoses for proper use, adjusting the boom angle and height hydraulically with controls on the vehicle, and then fine-tune the placement of the nozzle head through hands-on manipulation. The vehicle is normally stationary while the suction or water-pumping operations are taking place.

However, the weight of the fully equipped high capacity machines may prove prohibitive for shoulder and median

litter removal operations. Accuracy in placement of the vacuum tube nozzle is not possible with this design due to the lack of active motion controls for the nozzle where it hangs below the end of the boom.

Accordingly, a need exists for an dexterous cleaning apparatus that can pick up all lightweight and most awkwardly sized trash both on and off the roadway and that will allow for spot clean up in locations under and behind guardrails, amongst most highway vegetation, and on some sloping hillsides, and that does not require on-site manual set up allowing the vehicle's operator to remain in the cab at all times. The present invention satisfies these needs, as well as others, and generally overcomes the deficiencies found in existing equipment.

BRIEF SUMMARY OF THE INVENTION

The present invention pertains to a dexterous positioning nozzle assembly that may be mounted to a litter removal vehicle or to a stationary boom. The nozzle assembly of the present invention may be added to an existing vacuum source or may be provided as original equipment.

A litter removal vehicle employing the present invention, for example, is capable of removing the majority of roadway litter in a partially automated vacuum process in areas along the roadway that are not accessible by sweepers or similar machines. The apparatus permits the collection of trash along fences, shrubbery, guardrails, medians, and some embankments by using a large vacuum nozzle that can be extended with a boom reaching forward of the vehicle's cab and swinging to the left and right sides, although other boom configurations can employ the invention as well. Under normal circumstances, the operator may remain within the safety of the vehicle's cab while performing litter abatement operations. Toggle switches and a joystick controller permit no vacuum hose positioning, vacuum fan operation, and all on-site set-up operations without the need to place an operator near dangerous high-speed traffic.

By way of example, and not of limitation, the preferred embodiment of the invention is employed with a base vehicle that is capable of transporting the debris collection system from location to location. The debris collection system includes a vacuum generating assembly and housing that draws large volumes of air and litter through the end of an intake dexterous nozzle assembly and a boom assembly to a collection bin. The control assembly for positioning the nozzle and boom assemblies is preferably placed in the cab of the vehicle to allow a single operator to position the intake nozzle over debris for collection and to control air flow.

The dexterous nozzle assembly of the present invention generally comprises an upper joint coupled to the boom, a base member, an extensible fly, short and long stroke actuators, and a nozzle bracket assembly. The long and short stroke actuators are preferably electrical, hydraulic or pneumatic systems controlled by a three-axis joystick and switches known in the art.

The upper joint is the interface point between the body of the dexterous nozzle assembly and the end of the overhead boom of the base vehicle. The upper joint may be attached to the lip that is typically at the end of the boom and provides mounts for the remaining base, fly and nozzle bracket assembly components as well as the three actuating cylinders. The upper joint consists of upper and lower trays, the union of which preferably provides a degree of compliance for the nozzle assembly. A top flexible vacuum hose within the upper joint connects the boom openings to the top of the base.

The base is a long cylindrical structure that supports cantilever moments as the fly is extended, and is an integral part of the vacuum air pathway. The base is the uppermost element of the nozzle assembly that is made to sweep back and forth during device operation by the short stroke cylinder attached to the upper joint and the base.

The fly is preferably a large diameter steel tube, capable of extending from and retracting into the base allowing the nozzle assembly to change the ground clearance of the nozzle tip. The nozzle bracket and nozzle tip hang from the fly. The extension and retraction of the fly is controlled by the simultaneous extension of the twin long-stroke cylinders mounted to the upper joint on one end and the fly and nozzle bracket assembly on the other.

The nozzle bracket and nozzle tip extend the reach of the overall nozzle assembly and increase the device's accessibility to litter on the roadway. The nozzle bracket assembly can be rotated about the end of the fly through the opposed motion of the twin long-stroke cylinders. A lower flexible vacuum hose connects the bottom of the fly to the top of the nozzle tip. The nozzle tip is the lowest element on the end-effecter, and the first element to come in contact with roadway debris. The vacuum air pathway preferably reaches from the nozzle tip and nozzle bracket assembly through the length of the fly and base to the boom and into the refuse storage bin.

An object of the invention is to provide a nozzle positioning system that can readily adapt to changes in roadway height at culverts and reach over and under obstructions such as guardrails and thereby efficiently clear debris without requiring the operator to exit the vehicle.

Another object of the invention is to provide a mobile refuse collection system that does not require any nozzle set up prior to the start of refuse collection.

Another object of the invention is to provide a device that is simple in design and has a low machine weight to allow maintenance crews the freedom to drive on unpaved shoulder and right-of-way sections of state freeways and highways and efficiently collect debris.

Another object of the invention is to provide a dexterous nozzle assembly that has a compliant joint with the boom that can withstand impacts of the end of the assembly with obstructions without shearing the nozzle assembly from the boom.

Still another object of the invention is to provide a nozzle assembly that can be easily adapted to existing intake conduits of existing vacuum sources whether on a vehicle or on a stationary applications.

Further objects and advantages of the invention will be brought out in the following portions of the specification, wherein the detailed description is for the purpose of fully disclosing preferred embodiments of the invention without placing limitations thereon.

BRIEF DESCRIPTION OF THE DRAWINGS

The invention will be more fully understood by reference to the following drawings that are for illustrative purposes only:

FIG. **1** is a side view of a vehicle embodiment with a maneuverable boom and nozzle assembly according to the present invention.

FIG. **2** is a side view in perspective of an embodiment of the nozzle assembly according to the present invention.

FIG. **3** is a partial cross-sectional view, in side elevation, of the upper tray portion of the upper joint of one embodi-

ment of the nozzle assembly taken along the lines **3**—**3** shown in FIG. **2** in accordance with the present invention.

FIG. **4** is a cross-sectional view, in side elevation, of the upper tray portion of the upper joint of the apparatus shown in FIG. **3**, shown immediately after the nozzle assembly has impacted an obstacle showing the compliance of the upper joint.

FIG. **5**A is an exploded view in perspective of the upper joint of FIG. **2** according to the present invention.

FIG. **5**B is an exploded view in perspective of the base member of the nozzle assembly of shown in FIG. **2**.

FIG. **5**C is a perspective view of the fly section of the nozzle assembly of FIG. **2** that telescopes from the base member shown in FIG. **5**B according to the present invention.

FIG. **5**D is an exploded perspective view of the nozzle bracket assembly of the nozzle assembly of FIG. **2** according to the present invention.

FIG. **6** is a partial cross-sectional side view of one section of the base member and extensible fly joint of the nozzle assembly of FIG. **2** taken along lines **6**—**6**.

FIG. **7** is a left side view of the nozzle assembly shown in FIG. **2** according to the present invention with the fly in the fully retracted position.

FIG. **8** is a left side view of the nozzle assembly shown in FIG. **2** according to the present invention with the fly in the fully extended position.

FIG. **9** is a left side view of the nozzle assembly shown in FIG. **2** according to the present invention with the long cylinders at unequal lengths and showing one articulation of the nozzle bracket assembly.

FIG. **10** is a right side view of the nozzle assembly shown in FIG. **2** according to the present invention with the short cylinder in the midway or partially retracted position.

FIG. **11** is a right side view of the nozzle assembly shown in FIG. **2** according to the present invention with the short cylinder in the extended position and the long cylinders at equal lengths and showing the simultaneous articulation of the nozzle bracket assembly and the base member.

FIG. **12** is a right side view of an alternative embodiment of the present invention showing an off centered fixed nozzle tip.

FIG. **13** is a right side view of the nozzle assembly shown in FIG. **2** according to the present invention with the short cylinder in the extended position and the long stroke cylinders at unequal lengths.

FIG. **14** is an alternative embodiment of the present invention with a flexible hose mounted directly to the base member.

FIG. **15** is a schematic diagram of the preferred axes of rotation and lines of extension of the boom and nozzle assembly of the present invention as shown in FIG. **1**.

FIG. **16** is a side sectional view of a motor and gear configuration of the present invention allowing the axial rotation of the nozzle assembly shown in FIG. **2**.

DETAILED DESCRIPTION OF THE INVENTION

Referring more specifically to the drawings, for illustrative purposes the present invention is embodied in the apparatus generally shown in FIG. **1** through FIG. **16**, where like reference numbers denote like parts. It will be appreciated that the apparatus may vary as to configuration and as to details of the parts without departing from the basic inventive concepts disclosed herein.

Referring first to FIG. **1**, one embodiment of the invention utilizing a base vehicle **12** with the debris vacuum system is generally shown including a dexterous nozzle positioning assembly **10**, moveable boom, and vacuum system. While the mobile embodiment of the invention is disclosed, it will be understood that the dexterous nozzle assembly of the present invention can be adapted to any stationary or mobile system that requires an intake or output manipulation.

In the embodiment shown, the nozzle positioning system may be mounted on a new standard cab and chassis vehicle or may be added onto existing equipment such as a Leach Vac/AII in order to minimize equipment costs. A gross vehicle weight rating of approximately 26,000 pounds or less, capable of carrying an additional 2,000 pounds minimum of litter weight, in addition to all added equipment and an operator, is preferred. While a gross weight of 26,000 pounds or less is preferred, it will be seen that the invention can be adapted for use on conventional boom and vacuum trucks that have gross weights of 60,000 pounds or more.

Minimizing the net weight of vehicle **12** will permit operation on unpaved shoulders and many median roadway dividers. Vehicles where the cab **14** lies atop the front axle of the vehicle are preferred because such vehicles offer the operator greater visibility of the workspace ahead of the vehicle. In addition, cab-over type vehicles will allow boom positioning without requiring the operator to lean out of his or her seat in order to visualize placement of the vacuum nozzle assembly **10**. Optionally, the base vehicle **12** may have dual steering, throttle, and brake controls that permit simplified left and right side operations and increase the visible workspace to the operator.

The base vehicle **12** preferably has a linear boom assembly **16** that is capable of side-to-side, up and down and extensible motion. The available workspace of the invention may be partially defined by the motion capabilities of the boom **16** and the dexterous nozzle assembly **10**. The boom assembly **16** is typically located over the cab **14** and should preferably be free to rotate +/−45° about a vertical axis from the forward orientation. The boom **16** is preferably capable of conveniently carrying large diameter tubing or flexible hose **18** and the dexterous nozzle assembly **10** weighing on the order of three hundred pounds. Points of rotation and all geometries of the boom assembly **16** should not permit kinking or binding of the hose **18** that might distort its internal airflow. In this embodiment, the boom assembly **16** should reach a minimum of 8 feet to either side of the vehicle without aid of the nozzle assembly **10**.

In the embodiment shown, the nozzle assembly **10** is capable of lateral sweeping motion that is independent of the overhead boom **16**. However, it is preferred that all sweeping motion of the debris removal system occurs when the nozzle assembly **10** is oriented to sweep a path perpendicular to the sides of the base vehicle **12**. The boom assembly **16** and nozzle assembly **10** combined are preferably capable of raising and lowering the vacuum intake **20** of nozzle assembly **10** a total of at least **48** inches to account for changes in roadway height and embankment slopes. This preferred capability will permit placement of the vacuum nozzle assembly **10** partially underneath or behind guardrails. While a maneuverable boom **16** is preferred, it will be understood that the nozzle assembly **10** may be used successfully on a stationary boom. While stowed for roadway travel, the positioning system should not protrude beyond the width of the vehicle.

The nozzle positioning assembly **10** and boom assembly **16** should be sufficiently robust to handle dragging the

vacuum nozzle **10** alongside the base vehicle **12** in cases where action of the vacuum draws the end of nozzle intake **20** towards a fixed object or the ground. Built-in compliance in the nozzle assembly **10**, described in detail below, should allow minor collisions between the assembly and fixed objects without shearing the nozzle assembly **10** from boom **16**.

Finally, it is preferred that all positioning system controls should be located inside the cab **14**, be simple to operate, and be directly related to the motion capabilities of the boom **16** and nozzle assembly **10** so there is no need for on-site set-up that requires an operator to leave the safety of the cab **14**.

In the embodiment shown, boom assembly **16** includes sections of flexible tubing **18** with sections of rigid tubing **22** on either side of the flexible tubing **18**. The sections of tubing are preferably connected to boom support armature **24**. The sections of tubing **18** and **22** provide the airflow to route all captured trash into an internal debris storage bin **26** located on base vehicle **12**. In the embodiment shown, the flexible tubing **18** and rigid tubing **22** are preferably approximately 12 inches in diameter in order to pass the majority of roadway litter to the storage bin **26**. The hose **18** and tubing **22** of boom **16** are preferably made of material that is sturdy and resistant to internal abrasion from glass, wood, small metal objects, and sand, but is smooth enough to not restrict the maximum operational airflow or promote clogging. Additionally, it is preferred that both the flexible hose **18** and rigid tubing **22** be capable of withstanding temperatures from approximately 10° C. to 49° C. (50° F. to 120° F.), and should be resistant to ultraviolet light damage and water damage. The hose **18** and tubing **22** of the boom assembly **16** are preferably connected to a centrifugal fan type vacuum pump or compressor **28** that is capable of developing a high airflow and low vacuum. A centrifugal type compressor is preferred since it is better suited to develop a high airflow and is lighter weight and requires less power than positive displacement pumps known in the art.

A vacuum pump **28** that is capable of drawing air through a 12 inch diameter hose **22** at approximately 200 mph and 6.8 kPa (2 inches Hg) or greater is preferred in order to draw in typical roadway litter but not necessarily rocks or rooted vegetation. Airflow should be maintained independent of the volume of litter in the debris storage bin **26**.

The vacuum fan (not shown), which draws air into the storage bin **26** at high speeds, may be driven in one of several ways known in the art depending on the fan horsepower requirements and vehicle **12** space limitations. For example, a belt and pulley or gear transmission may be necessary to transmit power to the vacuum fan, or it may be directly attached to a chassis mounted, auxiliary internal combustion engine **30** as in the embodiment shown. Alternatively, a hydraulic motor may drive the fan.

It may be necessary to control the speed of the vacuum fan to adjust the airflow rate through nozzle assembly **10** and boom assembly **16**, or to have the capability of slowing the rotational speed of the fan during system shut down. It is preferred that the controls to the vacuum motor/fan **28** as well as any auxiliary engine **30** controls be routed to the cab **14** of the base vehicle **12**.

The vacuum fan and housing are preferably connected to a debris storage bin **26** that has a preferred minimum of 5 cubic yards of storage capacity. The ability to tilt the storage bin **26** and unload its contents is also preferred. In one embodiment, a lockable flap or full-sized door **32** is provided at the distal end **34** of debris bin **26** to permit easy unloading of collected refuse. The controls for tilting bin **26** and door **32** operations are preferably hydraulically actuated via controls in the cab **14** or on the base vehicle body **12**.

In another embodiment, a method for compacting the collected debris is provided in order to increase the collectable volume of trash in bin **26**. Such compacting capabilities may include physically pressing the litter into a smaller volume with augers or pistons or the like. Alternatively, the motion of the vacuum air may be used to draw the collected trash items towards the base or rear of bin **26**.

No litter should pass through the fan system after being drawn into the debris storage bin **26**. In one embodiment, a filtering mechanism (not shown) is provided that will prevent all litter and the majority of dust and small particles from entering the fan system and passing on to the environment. For example, airflow filtering may be accomplished within the debris storage bin **26** with metal screens and a dust settling box known in the art. Filtering mechanisms known in the art will prolong the life of the components of the fan system and avoid returning any items removed from the roadway to the surroundings.

In another embodiment, an exhaust muffler (not shown) is set to vent discharge air vertically to the atmosphere to control noise generated by the exhaust airflow. An enclosure for the fan power source may be necessary to attenuate noise generated by an auxiliary engine. Dust and particulate emissions from the vacuum system's exhaust should be kept to a minimum. The vacuum fan may be fully enclosed with inlet and outlet ducting spaced to permit connections to the storage bin, filtering, and muffler systems.

Control of the vacuum compressor **28**, boom assembly **16**, nozzle assembly **10** and other components of the system is preferably provided through electrical and hydraulic systems operable by a single operator in cab **14** of vehicle **12**. In the preferred embodiment, a multiple function joystick is ideal for controlling the motion of boom assembly **16** and nozzle assembly **10** due to the ease of operation. In one embodiment an analog joystick is used and an analog-to-digital converter or computer to manipulate control signals to the proportional hydraulic valves that actuate the nozzle placement system.

It is preferred that the base vehicle **12** operate on a standard 12-volt direct current electrical system. All added electrical components such as hydraulic valves, joystick controller, and indicator lights and the like should be capable of operation in a similar 12-volt system. The electrical system should not be capable of damaging the vehicle's electronics or hindering the vehicle's roadworthiness. Accordingly, adequate fuse protection and safety shutdown components are preferably installed, and all wires and major termination panels are preferably clearly labeled to aid in equipment maintenance.

The preferred hydraulic system may be powered by the vehicle's **12** engine or the auxiliary engine **30** mounted to the chassis. In either case, the vehicle **12** should be drivable while the hydraulic pump develops adequate power for all hydraulic components. Proportional valves may be required to permit fine placement control of all nozzle positioning system components.

The characteristics of a base vehicle **12** discussed above are preferences provided as an example of a base vehicle, not as limitations, and it will be understood that the nozzle assembly **10** of the present invention may be adapted for installation on new or existing vehicles that are configured differently or the assembly adapted for another purpose without departing from the scope of the invention.

Turning now to FIG. **2**, one embodiment of the nozzle assembly **10** of the present invention is shown. The nozzle

assembly **10** is coupled to the boom assembly **16** by a boom attachment joint **36**. The attachment joint **36** joins a tubular base member **38** of nozzle assembly **10** to the distal end of the boom assembly **16**. Base member **38** has an extensible member or fly **40** that moves outwardly and inwardly within base member **38** by the activation of a pair of long hydraulic cylinders **42***a* and **42***b*. It will be appreciated that extensible fly **40** could be a telescoping member as shown, or flexible hosing or the like could be employed as an alternative as shown in FIG. **14**. Attached to the distal end of extensible fly **40** are a flexible tube **44**, a nozzle bracket **46** and a nozzle tip **48**.

Referring also to FIG. **3** and FIG. **4**, it is preferred that the joint **36** between the boom **16** and nozzle assembly **10** allow rotation on several axes and have sufficient compliance to absorb shock loads which the nozzle assembly **10** may encounter from mild collisions during use. To avoid breaking the nozzle assembly **10** off of the overhead boom **16** and otherwise prevent damaging the boom and truck **12** in situations where the assembly **10** collides with a stationary object, it is preferred that the boom joint **36** be capable of absorbing the energy of a collision. It is also preferred that the joint **36** be capable of realigning itself after the impact, without the aid of active controls. However, the stiffness of joint **36** must be sufficient to not break free during normal use.

The boom joint **36** should be capable of supporting the weight of the nozzle assembly **10** as well as allow rotation of the nozzle assembly **10** about a vertical axis with respect to the end of the boom **16**. In addition, boom joint **36** should also allow litter to pass from the intake **20** of the nozzle assembly **10** up into the overhead boom assembly **16** without any loss of vacuum suction or infringement of vacuum airflow. A vacuum should be maintained between the top of base **38** and the opening at the end of the boom **16** throughout all motions of the boom joint **36**.

Universal type joints known in the art may be an acceptable boom joint but are not preferred because such joints have little capacity for collision energy absorption. The preferred joint **36** has a top tray **50**, that is mounted to the cylinder and lip **52** of the distal end of boom assembly **16**, and a bottom tray **54** that is coupled to the base member **38** of the nozzle assembly **10**. The top tray **50** and the bottom tray **54** are connected by a combination of joint bolts **56** and springs **58**. Under normal circumstances, the bolts **56** carry the weight of the bottom tray **54**. A flexible vacuum hose **60** within the boom joint **36** connects the boom **16** opening with the top of base **38**. The flexible hose **60** between the top of the base **38** and the lower annular flange **74** of the top tray **50** rotates about a vertical axis of motion with the nozzle assembly **10**. Thin rubber or felt vacuum seals (not shown) are preferably used around the interior of the top tray **50** to both maintain a vacuum seal and to properly align the top tray **50** with the lip **52** at the end of boom **16**.

The preferred top tray **50** has two half circular symmetric sections **50***a*, **50***b* that are joined around lip **52**. As seen in FIG. **3**, FIG. **4**, and FIG. **5**A the cross section of the top tray **50** has a generally "C" shaped channel **62** and preferably has a circumferential flange **64**, that may have a number of supporting gussets (not shown), and an upper annular flange **68**. Top Tray sections **50***a*, **50***b* are joined around the boom end lip **52** and the weight of the nozzle assembly **10** is supported on the top surface **66***a* of lip **52** with preferably sets of spherical thermoplastic ball bearings **70***a*, **70***b*, spaced evenly around the circumference of the lip **52** by thermoplastic bar material **72** cut into trapezoidal shapes to properly space the bearings. The thermoplastic material Delrin® is preferably used in place of steel for the ball bearings **70***a*, **70***b* and bar material **72** to avoid the need for lubrication and eliminate rust or corrosion worries in the event that water enters the channel **62**.

FIG.**3**, FIG. **4** and FIG. **5**A show the preferred placement of an upper set **70***a* of Delrin® ball bearings that are disposed on the upper surface **66***a* of the lip **52** of the end of boom **60** and within the upper section of channel **62** of top tray **50**. Likewise, a lower set **70***b* of Delrin® ball bearings are disposed on the lower surface **66***b* of lip **52** and in the lower section of channel **62** of top tray **50**. There is little concern about wear or binding of the bearings **70***a*, **70***b* or spacers **72** within the top tray channel **62** because the upper joint will typically rotate at very slow speeds and at irregular intervals.

The presence of the thermoplastic Delrin® ball bearings **70***a*, **70***b* permits the assembled halves of top tray **50** to rotate along the vertical axis at the boom's end. In the embodiment shown, the upper set of Delrin® ball bearings **70***a* roll against the top inner surfaces of the channel **62**, supporting the weight of the nozzle assembly **10**. The lower set of Delrin® ball bearings **70***b* then aid in maintaining the vertical position of top tray **50** with respect to the boom lip **52**, especially in cases where the nozzle assembly **10** strikes a fixed object, transmitting loads through the springs **58** and into the boom **16**.

The outer diameter of flange **64** of the top tray **50** may have a plurality of spring bosses (not shown) welded to its underside. Bores **76** are coaxial with the bosses and receive the long bolts **56** that support the bottom tray **54**. In one embodiment, the bores **76** are preferably oversized to allow the bolts **56** to shift in the event the nozzle assembly **10** collides with a fixed object, thus causing the bottom tray **54** to tilt with respect to the top tray **50**. The top tray **50** and the bottom tray **54** normally remain parallel to one another as seen in FIG. **3**.

Referring specifically to FIG. **4**, in the event that the end **48** of the nozzle assembly **10** collides with a fixed object, the forces on the assembly **10** are transmitted through the lower tray **54** and into the springs **58** that line the circumferential flange **64** of the top tray **50** of the upper joint **36**. It is preferred that the springs **58** are pre-loaded so that the assembly **10** will not shift unless a collision occurs, and to aid in re-alignment after a collision. The number, size and pre-load of the springs **58** may vary depending on the estimated overload or impact force that may be experienced in the event the nozzle assembly **10** strikes a fixed object.

The partial cross-section of FIG. **4** shows the top and bottom tray assembly shifted during a collision of the nozzle assembly **10** with an obstruction. Impact or excessive static loads on the nozzle assembly **10** will be transmitted through the body of the assembly and into the bottom tray **54**. Compression of a number of springs **58** will prevent these forces from being transmitted into the overhead boom **16**. When the load is removed, the joint **36** will automatically reset as the springs **58** expand until the bottom tray **54** is again constrained against bolts **56** and nuts **78**.

By allowing the springs **58** to extend above the boom lip **52**, larger springs can be used thereby increasing the energy absorbing capacity of the joint **36**. Thus there is adequate upper joint **36** compliance, in the embodiment shown, to permit the nozzle assembly **10** to move through its entire intended range of motion without compromising the vacuum seal.

As seen in FIG. **3**, FIG. **4** and FIG. **5**A, there is an annular retaining ring **74** at the bottom of the top tray **50** that serves

as a connecting surface for the flexible vacuum hose **60** that will maintain the vacuum airflow between the boom **16** and the top of the base member **38**. Optionally, adhesive backed felt or rubber (not shown), may be applied to the top of the retaining ring to ensure a good seal between the boom **16** vacuum opening and flexible hose **60**. When assembled on the boom **16** of the base vehicle **12**, the top of the retaining ring **74** preferably sits directly below the boom lip **52**. The felt material may be applied to close any gaps, and will subsequently rub the lower surface of the boom **16**, maintaining a vacuum seal as the top tray **50** is made to rotate on the lip **52** of the end of boom **16**.

The bottom tray **54** supports the base member **38** and allows the base to pivot. The bottom tray **54** is sized to permit centerline clearance of the upper flexible vacuum hose **60**, and to accept and support the compression springs **58**; joint bolts **56** and nuts **78** with washers **80**. The long bolts **56** that pass through the bores **76** of top tray **50** continue downward through the compression springs **58** and through the preferably counter bored holes **82** in the bottom tray **54**.

In one embodiment, the bolts **56** are threaded with self-locking nuts **78** such as Ny-Lock® nuts or the like. Consequently, the annularly disposed bolts **56** carry the weight of the bottom tray **54** plus the pre-load force of the springs **58**. Thus, in cases where the bottom tray **54** shifts upward with respect to the top tray **50** as shown in FIG. **4**, the tensile load on a portion of the bolts **56** will be temporarily removed until the springs **58** return the system to its normal state. Ny-Lock type nuts **78** are preferred to prevent a fastener from working its way off of a bolt **56** through repeated vibration cycles. The symmetric counter bores and through holes **82** in the bottom tray **54** keep the weight relatively low and evenly distributed.

The opening **84** in the center of the bottom tray **54** permits the placement of the flexible vacuum hose **60** between the bottom annular ring **74** of the top tray **50** and the top **86** of the base member **38**. The size of the opening **84** in lower tray **54** is preferably larger than the diameter of the flexible hose **60**. This clearance is necessary to permit bending of the hose **60** along the long axis as the base **38** swings underneath tray **54**. In one embodiment, the opening **84** is oval in shape.

Referring also to FIG. **5**B, it can be seen that the bottom tray **54** has mounts welded to the underside for pivotally coupling all actuation cylinders and the base member **38** to the bottom tray **54**. Since the base **38** is configured to swing beneath boom attachment joint **36**, bottom tray **54** has two base attachment mounts **88***a* and **88***b* aligned on opposing sides of the tray **54**. A pair of cylinder mounts **90***a*, **90***b* for attachment of the long cylinders **42***a*, **42***b* are aligned along the underside of the bottom tray **54** preferably in the same vertical plane as base **38** attachment mount **88***a*. Finally, short cylinder mount **92** for attachment of the short cylinder **94** is preferably aligned in the same vertical plane as base mount **88***b*.

In one embodiment, brass sleeve bushings (not shown) and swing pins **96***a*, **96***b* are provided to reduce wear on the steel mounts **88***a*, **88***b* of bottom tray **54** as well as base mounting crowns **98***a*, **98***b* of base assembly **38**. Two stainless steel pins **96***a*, **96***b* are then used to support the base **38**. The pins **96***a*, **96***b* are preferably fitted with grease caps, drilled, and turned to form grease pathways that will aid in lubricating these rotating joints (not shown). Optionally, shaft collars (not shown) may be welded to the outermost flanges with setscrews to secure the pins **96***a*, **96***b* in place. Thus, the base **38** is free to rotate on the pins **96***a*, **96***b* and the turned grease path on the pins is aligned to lubricate the brass bushings installed in the base crowns **98***a*, **98***b*.

Similarly, bottom tray mounting flanges **90***a*, **90***b* and **92** of bottom tray **54** preferably have press-fit brass bushings that will hold the greased long cylinder top pins **100***a*, **100***b* and top pin **102** of the short-stroke cylinder **94** to couple the respective cylinders to the bottom tray **54**.

The base member **38** is a large diameter, rigid open tube that supports the extensible fly **40** and preferably permits vacuum airflow through its interior without being unreasonably heavy. In the embodiment shown, there are optionally eight rings **104** that stiffen the base **38** and maintain its circularity. The top tube portion **86** of the base **38** is an attachment point for the top flexible vacuum hose **60**.

Referring also to FIG. **5**C and FIG. **6**, in the embodiment shown, extensible fly **40** slides within a pair of longitudinal channels **108***a*, **108***b* in the base member **38**. The long, narrow channels **108***a*, **108***b* fulfill two roles. First, the channels **108***a*, **108***b* provide clearance for the roller track **116** attached to the fly **40** as it is made to retract into the base **38**. Secondly, the channels provide structure to support the bending moment that pivots the base **38** and swings the nozzle assembly **10** below the upper joint **36** around pins **96***a*, **96***b*. It is also preferred that base crowns **98***a*, **98***b* are mounted to the proximal end of channels **108***a*, **108***b* for coupling with bottom tray mounts **88***a*, **88***b*.

Attached to the long channels **108***a*, **108***b* are shorter, wider channels **110***a*, **110***b* and are preferably the mounting platforms for the roller journals **112** and cap seals **114** that clean the roller track **116** of fly **40**. Rubber cap seals **114**, preferably constructed with oil impregnated felt pads, fit over the roller journals **112** and lubricate and clean the roller track **116** as it is moved and protects the journals **112** from contaminants as seen in FIG. **5***b*. In one embodiment, thin metal washer type shims (not shown) may be used to adjust the spacing between the journals **112** and the interior wall of the short channels **110***a*, **110***b*. Adjustment of the shims assures coaxial alignment of the fly **40** within the base **38**.

In order to further maintain a vacuum inside the base **38**, the top ends of the long channels **108***a*, **108***b* are preferably capped sheet metal. Gussets **120** may be welded in the pockets between the long and short channels to more evenly transition the moment loading between the base **38** and fly **40** sections.

Base **38** also has a triangular flange **122** preferably welded to the face of the front long channel **108***b* that permits attachment of the bottom end of the short-stroke cylinder **94**. Short stroke cylinder **94** is coupled to triangular flange **122** with a pin **124** and to mount **92** of the bottom tray with pin **102**. In this configuration, forces that are developed through actuation of the short cylinder **94** are transmitted into the base **38** thereby causing the nozzle assembly **10** to swing beneath the bottom tray **54**. Like the other pin joints previously described, pin **124** preferably fits with a press-fit brass bushing in flange **122**.

The fly **40** is preferably a straight steel tube with a pair of roller tracks **116** mounted longitudinally on fly **40** that facilitate its telescopic motion into and out of the base **38**. In one embodiment, tracks **116** are made from square steel bars welded to "V" edged tracks and mounted to the tube diametrically opposite each other. These bars permit mounting of the "V" track to the fly **40**.

A vacuum must be maintained within the fly **40** and base **38** for proper debris transport into the overhead boom **16**. To accomplish this, vacuum seals are preferably fabricated to close the gap between the top of the fly **40** and the inside of

the base **38**. As seen in FIG. **5**C, one or more circumferential seals **126** are attached to the top surface of the end of fly **40**. Seal **126** wipes along the interior of the cylindrical tube of the base **38**, while seals **118** wipe along the interior of the long, narrow channels **108***a*, **108***b*. Thus, channel seals **118** and the circumferential seal **126** seal the interior of the base **38** as the fly **40** is extended, significantly restricting vacuum airflow and subsequent pressure losses through the channels **108***a*, **108***b* and around the exterior of the fly **40**.

Referring now to FIGS. **5**B and **5**D, the long stroke cylinder flange **130** is the junction between the twin long-stroke cylinders **42***a*, **42***b*, the nozzle bracket assembly **132**, and the fly **40**. Cylinder flange **130** is an elongate member with a central pivot sleeve **138** and sleeves **140***a*, **140***b* at respective ends of the cylinder flange **130**. It is preferred that sleeves **138**, **140***a* and **140***b* of the cylinder flange **130** be sized to accept press-fit brass sleeve bushings. The central pivot sleeve **138** receives lift pin **136** and sleeves **140***a* and **140***b* will receive the lower pins **134***a*, **134***b* of the long-stroke cylinders **42***a*, **42***b* respectively. In the embodiment shown, there are six holes drilled around the center hole of the cylinder flange **130** to permit fastening of the flange **130** to the nozzle bracket **46**. Optionally, a spacer **142** fits between the nozzle bracket **46** and the cylinder flange **130**.

Lift pin **136** is disposed in sleeve **138** of cylinder flange **130**, spacer **142**, bracket sleeve **144***a* of nozzle bracket **46** and sleeve **128***a* of fly **40**. The lift pin **136** may be held in place by a fastener threaded through the pin sleeve **138** and into a notch in the pin itself (not shown).

Turning specifically to FIG. **5**D, the preferred nozzle bracket assembly **132** can be generally seen. The nozzle bracket assembly **132** includes the nozzle bracket **46** and a flexible tube **44** that is coupled to nozzle tip **48**. The nozzle bracket **46** preferably has two elongate arms **146***a*, **146***b* coupled to a circular frame **148**. Nozzle bracket **46** **132** preferably has four bearings or sleeves in arms **146***a*, **146***b* positioned on opposite sides of a circular frame **148**. Sleeve **144***a* of arm **146***a* of the nozzle bracket **46** receives lift pin **136**. Directly opposite sleeve **144***a* is sleeve **144***b* that receives top dowel pin **150**, which pivotally couples arm **146***b* of nozzle bracket **132** to sleeve **128***b* of the distal end of fly **40**. The dowel pin **150** and the lift pin **136** together support the nozzle bracket assembly **132**, while the lift pin **136** also serves as a connection to the long-stroke cylinders through cylinder flange **130**. These pins also provide a pivotal axis that permits rotational motion of the nozzle bracket assembly **132**. Lower dowel pins **152***a*, **152***b* are disposed in sleeves or bearings **154***a*, **154***b* respectively. The lower dowel pins **152***a*, **152***b* pivotally couple the arms **146***a*, **146***b* of the nozzle bracket with the nozzle tip **48** through the tip bearings **156***a*, **156***b* respectively. The pins **152***a*, **152***b* are preferably free to rotate in the flange bearings **156***a*, **156***b*.

In the embodiment shown, the three dowel pins **150**, **152***a*, **152***b* and lift pin **136** are fixed with respect to the nozzle bracket **46** and permit rotation of the bracket assembly **132** with respect to the fly **40**, as well as rotation of the nozzle tip **48** with respect to the bracket arms **146***a*, **146***b* of bracket **46**. In one embodiment, the lower pins **152***a*, **152***b* are not greased and ride in the nylon portions of the flange bearings **154***a*, **154***b* on the nozzle tip **48**.

The distal end of fly **40** preferably protrudes beyond the pin mounts **128***a*, **128***b* so that a second section of flexible hose material **44** may be mounted to the distal end of the fly **40**. This flexible hose **44** connects and maintains the vacuum between the lower end of the fly **40** and the top rim **158** of the nozzle tip **48**.

The nozzle tip **48** is preferably a short section of thin walled steel tubing. In the embodiment shown, nozzle tip **48** has a number of notches **160** that are cut into the lower end of the tip **48**. These notches **160** permit continuous airflow in cases where the nozzle tip **48** is very near or on the ground. Continuous airflow is necessary to avoid the strength of the vacuum from drawing the nozzle tip **48** firmly against the ground, which could require powering down the vacuum to remove the nozzle from the ground. It will also be understood that the nozzle tip **48** may be configured with a nozzle assist device such as a rake, brushes, compressed air jets, shredders and the like that can assist in the movement of litter items toward the intake **20** of the nozzle tip **48** of the nozzle assembly **10**.

Overall, the nozzle bracket **46** supports the nozzle tip **48** and adds an extra degree of freedom to the nozzle assembly **10**. In the embodiment shown, the rotation of the nozzle tip **48** is passive on the lower axis about pins **152***a*, **152***b* of bracket **46**. Accordingly, the stiffness of the hose **44** will determine how far the nozzle tip **48** rotates with respect to the bracket arms **146***a*, **146***b* as the bracket assembly **132** itself is made to rotate under the fly **40**. By allowing the rotation of nozzle tip **48** on the bracket **46** to be passive, many minor collisions between the nozzle assembly **10** and fixed objects will merely shift the nozzle tip **48** on its axis around pins **152***a*, **152***b* without affecting the remainder of the nozzle assembly **10**.

Turning now to FIG. **7**, FIG. **8** and FIG. **9**, the movements of the fly **40** and nozzle bracket assembly **132** by activation of the long cylinders **42***a*, **42***b* are shown. It can be seen that the lift pin **136** will transmit the fly extension and retraction forces from the long-stroke cylinders **42***a*, **42***b*, through cylinder flange **130**, lift Pin **136**, and into the fly **40**, thus controlling the position of fly **40** with respect to the base **38**.

In FIG. **7**, the long cylinders **42***a*, **42***b* are fully retracted and the fly **40** is fully retracted within base **38** as a consequence.

As seen in FIG. **8**, the simultaneous, equal extension of the long cylinders **42***a*, **42***b* causes vertical translation of the center point of the flange **130**. This carries with it the lift pin **136** that supports the bracket **132** and the fly **40**, thus extending or retracting these elements. Cylinder flange **130** is the bottom end of a four-bar linkage between the long-stroke cylinders **42***a*, **42***b* and the mounts **90***a*, **90***b* welded to the bottom tray **54** of the upper joint **36**.

Because the nozzle bracket **132**, spacer **142**, and cylinder flange **130** are free to rotate about the axis of lift pin **136** and dowel pin **150**, the nozzle bracket **132** will rotate about the axis when the long cylinders **42***a*, **42***b* are actuated in opposite senses as seen in FIG. **9**. The nozzle bracket **132** can be pivoted in either direction depending on the relative length of the extension of the cylinders **42***a*, **42***b*.

Furthermore, when the opposed motion of the two long-stroke cylinders **42***a*, **42***b* causes rotation of the flange **130** and bracket **46**, the vertical position of the lift pin **136** remains constant thereby maintaining the height of the fly **40** and nozzle bracket assembly **132** during rotation. Thus, the fly **40** can be extended or retracted at the same time that the nozzle bracket assembly **132** is rotated.

Referring now to FIG. **10**, FIG. **11** and FIG. **13**, the movement of the nozzle assembly **10** from the actuation of the short cylinder **94** is shown. It can be seen that the actuation of the short cylinder **96** causes movement of the base **38** and fly **40** with respect to the upper joint **36** from the vertical position shown in FIG. **10** to a position shown in FIG. **11** or in FIG. **13**.

Requiring the vehicle operator to continuously steer back and forth across the shoulder of the roadway would be hazardous to the operator as well as to passing motorists. In order to access a wide path of roadway without requiring large steering adjustments, the actuation of the short cylinder **94** creates a side-to-side sweeping motion as the base **38** pivots about pins **96***a*, **96***b* that couple base **38** to the bottom tray **54** of the upper joint **36**. In this fashion, the nozzle assembly **10** can sweep over a large path of roadway with or without the aid of the overhead boom movements. The bottom center of the nozzle tip **48** can preferably function above ground level as well as below ground level.

The actuation of the short stroke cylinder **94** alone will pivot the base **38** with respect to the upper joint **36** while the nozzle bracket assembly **132** remains in the resting position as seen in FIG. **11**. When the short stroke cylinder **94** is extend and retracted, the nozzle bracket assembly **132** and the base **38** articulate in opposite directions. Since the nozzle assembly **132** can pivot around pins **136** and **150**, the nozzle tip **48** can remain generally perpendicular to the ground during the sweeping motion created by the actuation of the short stroke cylinder **94** and the long stroke cylinders **42***a*, **42***b* remain at rest and at equal lengths.

It can be seen that the orientation of the boom attachment joint **36** is parallel to the orientation of the length of the nozzle assembly **132**. The long stroke cylinders **42***a*, **42***b* can maintain this orientation without continuous adjustments during the sweep cycle because of the four-bar linkage configuration.

Turning now to FIG. **12**, an alternative embodiment of the invention is shown that has a fixed nozzle tip **162** that is mounted to nozzle bracket arms **146***a*, **146***b*. In the embodiment shown, the nozzle tip **162** is wide and non-symmetric. The orientation of the nozzle tip **162** can only be manipulated by the actuation of the long stroke cylinders **42***a*, **42***b* which cause the nozzle bracket assembly **132** to pivot about pins **136** and **150**.

When the lateral sweeping motion caused by short stroke cylinder **94** moves the base **38** back and forth, the parallel bar linkage configuration causes nozzle assembly **132** to maintain its orientation with respect to the road. This feature avoids the need for constant adjustments of long stroke cylinders **42***a*, **42***b* to maintain the orientation of nozzle tip **162**. The off centered nozzle tip **162** of FIG. **12** is configured to reach under guardrails and bushes and the like.

Turning now to FIG. **13**, the simultaneous actuation of the short stroke cylinder **94** and the unequal actuation of the long stroke cylinders **42***a*, **42***b* is shown. As also seen in FIG. **9**, the unequal actuation of the long stroke cylinders **42***a*, **42***b* allows the articulation of the nozzle bracket assembly **132** with respect to the base **38** and fly **40**. In the embodiment shown in FIG. **13**, the nozzle bracket assembly is configured to engage a sloped surface or a gutter where the surface to be cleaned is not horizontal. Additionally, the ground surface will passively orient the nozzle tip **48** during the sweep along the sloped surface.

In the alternative embodiment shown in FIG. **14**, the fly is replaced with flexible tubing. In this embodiment, the flexible tube **44** from the nozzle tip **48** is extended and fixed directly to the bottom of the tubular base **38** and the need for sealing the sliding components of a fly is avoided. Extension of long stroke cylinders **42***a*, **42***b* extends the nozzle bracket assembly as well as the compressible flexible hose **44**.

It is preferred that the cross-section of the roller tracks **116** be increased to support the bending load that is carried by the fly in the preferred configuration. Accordingly, the longitudinal channels **108***a* and **108***b* would be correspondingly widened to accommodate the wider roller tracks **116** and closed off from the internal volume of the base **32**. In addition, it is preferred that the flexible tube **44** be very compressible to allow for the vertical motion of the nozzle assembly **132**.

The preferred movements of the boom **16** and nozzle assembly **10** are shown schematically in FIG. **15**. Control over the movements of the boom **16** and nozzle assembly **10** as well as control over auxiliary engine **30** startup, shutdown, engine throttle, electrical systems and hydraulic systems are preferably accessible to the operator in the cab **14**.

The hydraulic valves for both of the long stroke cylinders **42***a*, **42***b* preferably have proportional controllers (not shown) but may also be of the on-off variety. The controllers may be stacked atop flow controlling valves that permit fine-tuning of the hydraulic oil flow rates into both sides of the cylinders.

The hydraulic valve stack for the short stroke cylinder **94** is also preferably proportional so as to selectively control the sweeping speed of the nozzle assembly **10**. In one embodiment, an adjustable pressure bypass valve in the valve stack allows the short cylinder **94** to move when a threshold load limit is surpassed. This aids in preventing system damage in the event that the nozzle assembly **10** strikes a fixed object.

In the preferred embodiment, a three-axis joystick equipped with a plurality of momentary switches controls all motion of the boom **16** and nozzle assembly **10**. In one embodiment, the X-axis of the joystick (left-right motion) operates the short stroke cylinder and sweeps the nozzle assembly **10** back and forth. The further the joystick is perturbed from its center, the faster the arm will swing to the same side. The Y-axis of the joystick (top-bottom motion) extends and retracts the length of the boom **16**. The Z-axis of the joystick, i.e. rotation of the handle, preferably rotates boom **16** clockwise or counter-clockwise. It is preferred that the control of all motions of the nozzle assembly and the fully mobile overhead boom **16**, be integrated into the same multi-function joystick through the use of a programmable micro controller (not shown) known in the art.

In one embodiment, four switches or thumb-actuated buttons operate the long stroke cylinders **42***a*, **42***b*. The actuation of each switch causes (1) extension of fly **40**, (2) retraction of fly **40**, (3) nozzle bracket assembly **132** clockwise rotation, and (4) nozzle bracket assembly **132** counterclockwise rotation.

In this embodiment, the means for allowing the axial rotation of the nozzle assembly **10** with respect to the boom **16**, identified as the X' axis in FIG. **15**, is an electric motor. As seen in FIG. **16**, the lip **68** of the upper tray **50***a*, **50***b* has a set of teeth **164** that mesh with the teeth of gear **166**. Gear **166** is preferably rotated by a reversible electric motor **168**. It can be seen that the clockwise or counter-clockwise rotation of the motor **168** and gear **166** will cause the upper joint **36** to rotate axially along the sets of ball bearings **70***a* and **70***b* thereby selectively controlling the orientation of the assembly **10**. Although an electric motor and gearing is preferred, it will be understood that a pneumatic, hydraulic or other motor known in the art can be used.

In use, a vehicle **12** equipped with the invention can be easily driven to the desired location for highway cleaning. Roadway refuse on the non-traffic side of the guardrail, for example, can be removed by the operator through the general placement of the nozzle assembly **10** over the

guardrail by lifting and extending boom **16** and then orienting the nozzle assembly **10**. Extensible motion of the fly **40** is controlled by the twin long-stroke cylinders **42***a*, **42***b* that interface with the bottom of the fly **40** at the lift pin sleeve **128***a* and the cylinder flange **130**. Orientation of the nozzle tip intake **20** over the refuse occurs by actuation of the long stroke cylinders **42***a*, **42***b*. Running both long cylinders up simultaneously retracts the fly **40**. Running both long stroke cylinders **42***a*, **42***b* down extends the fly **40**. If the left cylinder **42***a* is drawn up while the right cylinder **42***b* proceeds downward, the nozzle bracket assembly **132** will rotate clockwise. The opposite is true for counterclockwise nozzle bracket **132** rotation.

Additionally, roadside sweeping can be conducted by the regular actuation of the short stroke cylinder **94** swinging the nozzle assembly **10** in a predictable pattern. Actuation of the short stroke cylinder can be automated or performed by hand.

Accordingly, it will be seen that this invention is a particulate vacuum system with a dexterous nozzle assembly to facilitate the placement of an intake nozzle tip by the operator while remaining in the cab of the vehicle. While the invention is described within the context of a vacuum vehicle, it will be apparent that the invention can be easily adapted to any system that requires placement of an intake or output member.

Although the description above contains many specificities, these should not be construed as limiting the scope of the invention but as merely providing illustrations of some of the presently preferred embodiments of this invention. Therefore, it will be appreciated that the scope of the present invention fully encompasses other embodiments which may become obvious to those skilled in the art, and that the scope of the present invention is accordingly to be limited by nothing other than the appended claims, in which reference to an element in the singular is not intended to mean "one and only one" unless explicitly so stated, but rather "one or more." All structural, chemical, and functional equivalents to the elements of the above-described preferred embodiment that are known to those of ordinary skill in the art are expressly incorporated herein by reference and are intended to be encompassed by the present claims. Moreover, it is not necessary for a device or method to address each and every problem sought to be solved by the present invention, for it to be encompassed by the present claims. Furthermore, no element, component, or method step in the present disclosure is intended to be dedicated to the public regardless of whether the element, component, or method step is explicitly recited in the claims. No claim element herein is to be construed under the provisions of 35 U.S.C. 112, sixth paragraph, unless the element is expressly recited using the phrase "means for."

What is claimed is:

1. A nozzle apparatus for vacuum removal of debris, comprising:

a tubular base member capable of being attached to a conduit;

an extensible member slidably coupled to said base member;

said extensible member configured for longitudinal extension and retraction;

said extensible member having a nozzle tip;

means for extending or retracting said extensible member; and

a coupling member;

said coupling member configured for coupling said tubular base member to a conduit.

2. An apparatus as recited in claim **1**, wherein said base member is pivotally coupled to said coupling member.

3. An apparatus as recited in claim **2**, further comprising means for pivoting said base member in relation to said coupling member.

4. An apparatus as recited in claim **3**, wherein said means for pivoting said base member comprises a controllable actuator having a first end coupled to said base member and a second end coupled to said coupling member.

5. An apparatus as recited in claim **1**, wherein said coupling member is configured to dampen and reduce the force of impact of the apparatus with a surface during use.

6. An apparatus as recited in claim **1**, wherein said coupling member comprises a universal joint configured for coupling said base member to a conduit.

7. An apparatus as recited in claim **6**, wherein said universal joint comprises:

an upper tray configured for coupling to said conduit; and

a lower tray coupled to said nozzle assembly;

said lower tray coupled to said upper tray with a plurality of resilient members;

wherein the joint between said base and a conduit is compliant.

8. An apparatus as recited in claim **6**, wherein said universal joint is configured to rotate axially.

9. A nozzle apparatus for vacuum removal of debris, comprising:

a tubular base member capable of being attached to a conduit;

an extensible member slidably coupled to said base member;

said extensible member configured for longitudinal extension and retraction;

said extensible member having a nozzle tip;

means for extending or retracting said extensible member; and

a nozzle tip coupled to said extensible member.

10. An apparatus as recited in claim **9**, wherein said nozzle tip is pivotally coupled to said extensible member.

11. An apparatus as recited in claim **9**, wherein said nozzle tip further comprises:

a flexible tube coupled to said extensible member and having an open end; and

means for changing the direction of said open end of said flexible tube.

12. An apparatus as recited in claim **11**, wherein said means for changing the direction of the end of said nozzle comprises:

a nozzle bracket pivotally mounted to said extensible member;

said bracket coupled to said flexible tube and mounted to a distal end of said extensible member;

said flexible tube having a nozzle mouth; and

at least one pair of long stroke controllable actuators mounted to said nozzle bracket;

wherein differential actuation of said actuators changes the direction of nozzle bracket and said end of said flexible tube.

13. An apparatus as recited in claim **12**, wherein said nozzle mouth is pivotally coupled to said nozzle bracket.

14. A nozzle apparatus for vacuum removal of debris, comprising:

a tubular base member capable of being attached to a conduit;

an extensible member slidably coupled to said base member;

said extensible member configured for longitudinal extension and retraction;

said extensible member having a nozzle tip;

a controllable actuator configured for extending or retracting said extensible member; and

a coupling member;

said coupling member configured for coupling said tubular base member to a conduit.

15. An apparatus as recited in claim **14**, wherein said base member is pivotally coupled to said coupling member.

16. An apparatus as recited in claim **15**, further comprising means for pivoting said base member in relation to said coupling member.

17. An apparatus as recited in claim **16**, wherein said means for pivoting said base member comprises a controllable actuator having a first end coupled to said base member and a second end coupled to said coupling member.

18. An apparatus as recited in claim **14**, wherein said coupling member is configured to dampen and reduce the force of impact of the apparatus with a surface during use.

19. An apparatus as recited in claim **14**, wherein said coupling member comprises a universal joint configured for coupling said base member to a conduit.

20. An apparatus as recited in claim **19**, wherein said universal joint comprises:

an upper tray configured for coupling to said conduit; and

a lower tray coupled to said nozzle assembly;

said lower tray coupled to said upper tray with a plurality of resilient members;

wherein the joint between said base and a conduit is compliant.

21. An apparatus as recited in claim **19**, wherein said universal joint is configured to rotate axially.

22. A nozzle apparatus for vacuum removal of debris comprising:

a tubular base member capable of being attached to a conduit;

an extensible member slidably coupled to said base member;

said extensible member configured for longitudinal extension and retraction;

said extensible member having a nozzle tip;

a controllable actuator configured for extending or retracting said extensible member; and

a nozzle tip coupled to said extensible member.

23. An apparatus as recited in claim **22**, wherein said nozzle tip is pivotally coupled to said extensible member.

24. An apparatus as recited in claim **22**, wherein said nozzle tip further comprises:

a flexible tube coupled to said extensible member and having an open end; and

means for changing the direction of said open end of said flexible tube.

25. An apparatus as recited in claim **24**, wherein said means for changing the direction of the end of said nozzle comprises:

a nozzle bracket pivotally mounted to said extensible member;

said bracket coupled to said flexible tube and mounted to a distal end of said extensible member;

said flexible tube having a nozzle mouth; and

at least one pair of long stroke controllable actuators mounted to said nozzle bracket;

wherein differential actuation of said actuators changes the direction of nozzle bracket and said end of said flexible tube.

26. An apparatus as recited in claim **25**, wherein said nozzle mouth is pivotally coupled to said nozzle bracket.

27. A particulate matter moving apparatus, comprising

a dexterous extensible nozzle assembly configured to be pivotally coupled to a conduit; and

means for manipulating the position of the nozzle assembly;

wherein the elevation and location of said nozzle assembly can be precisely adjusted; and

wherein said dexterous nozzle assembly further comprises a universal joint capable of coupling said nozzle assembly to a conduit.

28. An apparatus as recited in claim **27**, wherein said universal joint comprises:

an upper tray configured for mounting to a conduit;

said upper tray having an annular channel;

a lower tray mounted to said nozzle assembly;

said lower tray coupled to said upper tray; and

a plurality of flexible bearings evenly disposed within said annular channel of said upper tray;

wherein said nozzle assembly can rotate axially.

29. A particulate matter moving apparatus, comprising:

a dexterous extensible nozzle assembly configured to be pivotally coupled to a conduit; and

means for manipulating the position of the nozzle assembly;

wherein the elevation and location of said nozzle assembly can be precisely adjusted;

wherein said extensible nozzle assembly comprises:

a cylindrical base;

a fly slidably coupled to said base; and

a nozzle tip coupled to said fly.

30. An apparatus as recited in claim **29**, wherein said nozzle tip further comprises:

a flexible tube coupled to said fly and having an open end; and

means for changing the direction of said open end of said flexible tube.

31. An apparatus as recited in claim **29**, wherein said nozzle assembly further comprises a bracket pivotally connected to said fly and said nozzle tip.

32. An apparatus as recited in claim **29**, wherein said means for manipulating the position of the nozzle assembly comprises:

means for pivotally rotating said nozzle assembly with respect to said conduit;

means for extending and retracting said fly longitudinally from said base; and

means for changing the direction of said nozzle tip.

33. An apparatus as recited in claim **32**, wherein said means for pivoting said nozzle assembly comprises a controllable actuator and flange.

34. An apparatus as recited in claim **32**, wherein said means for extending and retracting said fly longitudinally from said base comprises:

at least one pair of long stroke cylinders having first and second ends;

said first ends mounted to said base and said second ends mounted to said fly.

35. An apparatus as recited in claim **32**, wherein said means for changing the direction of the nozzle tip comprises:

a nozzle bracket pivotally mounted to said fly;

said bracket coupled to a flexible tube mounted to a distal end of said fly;

said flexible tube having a nozzle mouth; and

at least one pair of long stroke cylinders having first and second ends;

said first ends mounted to said base and said second ends mounted to said nozzle bracket.

36. An apparatus as recited in claim **29**, wherein said means for changing the direction of the nozzle tip comprises:

a nozzle bracket pivotally mounted to said fly;

said bracket coupled to a flexible tube mounted to a distal end of said fly;

said flexible tube having a nozzle mouth; and

at least one pair of long stroke cylinders having first and second ends;

said first ends mounted to a universal joint and said second ends mounted to said nozzle bracket.

37. An apparatus as recited in claim **27** or **29** wherein said means for manipulating the position of the nozzle assembly comprises a controllable actuator.

38. A particulate matter moving apparatus, comprising:

a dexterous extensible nozzle assembly configured to be pivotally coupled to a conduit: and

a controllable actuator configured for manipulating the position of the nozzle assembly;

wherein the elevation and location of said nozzle assembly can be precisely adjusted: and

wherein said dexterous nozzle assembly further comprises a universal joint capable of coupling said nozzle assembly to a conduit.

39. An apparatus as recited in claim **38**, wherein said universal joint comprises:

an upper tray configured for mounting to a conduit;

said upper tray having an annular channel;

a lower tray mounted to said nozzle assembly;

said lower tray coupled to said upper tray; and

a plurality of flexible bearings evenly disposed with in said annular channel of said upper tray;

wherein said nozzle assembly can rotate axially.

40. An apparatus as recited in claim **39**, wherein said extensible nozzle assembly further comprises:

means for causing the axial rotation of said nozzle assembly.

41. An apparatus as recited in claim **40**, wherein said means for causing axial rotation of said nozzle assembly comprises:

a set of teeth extending radially from said upper tray; and

a motor with a sprocket configured to engage said teeth;

wherein actuation of the motor caused the axial rotation of said nozzle assembly.

42. A particulate matter moving apparatus, comprising:

a dexterous extensible nozzle assembly configured to be pivotally coupled to a conduit; and

a controllable actuator configured for manipulating the position of the nozzle assembly;

wherein the elevation and location of said nozzle assembly can be precisely adjusted; and

wherein said extensible nozzle assembly comprises:

a cylindrical base;

a fly slidably coupled to said base;

a nozzle tip coupled to said fly; and

means for manipulating the position of the nozzle assembly.

43. An apparatus as recited in claim **42**, wherein said nozzle tip further comprises:

a flexible tube coupled to said fly and having an open end; and

means for changing the direction of said open end of said flexible tube.

44. An apparatus as recited in claim **43**, wherein said means for changing the direction of the nozzle tip comprises:

a nozzle bracket pivotally mounted to said fly;

said bracket coupled to a flexible tube mounted to a distal end of said fly;

said flexible tube having a nozzle mouth; and

at least one pair of long stroke cylinders having first and second ends;

said first ends mounted to said base and said second ends mounted to said nozzle bracket.

45. An apparatus as recited in claim **42**, wherein said nozzle assembly further comprises a bracket pivotally connected to said fly and said nozzle tip.

46. An apparatus as recited in claim **42**, wherein said means for manipulating the position of the nozzle assembly comprises:

means for pivotally rotating said nozzle assembly with respect to said conduit

means for extending and rending said fly longitudinally from said base; and

means for changing the direction of said nozzle tip.

47. An apparatus as recited in claim **46**, wherein said means for manipulating the position of the nozzle assembly further comprises:

means for causing the axial rotation of said nozzle assembly.

48. An apparatus as recited in claim **46**, wherein said means for pivoting said nozzle assembly comprises a controllable actuator and flange.

49. An apparatus as recited in **46**, wherein said means for extending and retracting said fly longitudinally from said base comprises:

at least one pair of long stroke cylinders having first and second ends;

said first ends mounted to said base and said second ends mounted to said fly.

50. An apparatus as recited in claim **46**, wherein said means for changing the direction of the nozzle tip comprises:

a nozzle bracket pivotally mounted to said fly;

said bracket coupled to a flexible tube mounted to a distal end of said fly;

said flexible tube having a nozzle mouth; and

at least one pair of long stroke cylinders having first and second ends;

said first ends mounted to a universal joint and said second ends mounted to said nozzle bracket.

51. A nozzle assembly, comprising:

an outer cylinder;

said outer cylinder having a universal joint capable of coupling said outer cylinder with a conduit;

wherein said universal joint is configured to dampen and reduce shear forces;

an inner cylinder disposed within the outer cylinder on a plurality of support rails;

means for extending and retracting said inner cylinder with respect to said outer cylinder; and

a dexterous nozzle tip coupled to said inner cylinder.

52. A nozzle assembly as recited in claim **51**, wherein said universal joint further comprises:

an upper tray configured for mounting to a conduit; and

a lower tray mounted to said upper tray with a plurality of spring tensioned fasteners disposed radially around the periphery of said upper tray and said lower tray;

said lower tray pivotally coupled to said outer cylinder.

53. A nozzle assembly as recited in claim **51**, wherein said means for extending and retracting said inner cylinder from said outer cylinder comprises:

at least one pair of long stroke cylinders having first and second ends;

said first ends mounted to said outer cylinder and said second ends mounted to said inner cylinder.

54. A nozzle assembly as recited in claim **51**, wherein said dexterous nozzle tip comprises:

a nozzle bracket pivotally mounted to said fly;

said bracket coupled to a flexible tube mounted to a distal end of said inner cylinder;

said flexible tube having a nozzle mouth; and

at least one pair of long stroke cylinders mounted to said nozzle bracket;

wherein differential actuation of said long stroke cylinders pivots said nozzle bracket.

55. A nozzle assembly as recited in claim **51**, wherein said means for extending and retracting said inner cylinder with respect to said outer cylinder comprises a controllable actuator.

56. A nozzle assembly, comprising:

an outer cylinder;

said outer cylinder having a universal joint capable of coupling said outer cylinder with a conduit;

wherein said universal joint is configured to dampen and reduce shear forces;

an inner cylinder disposed within the outer cylinder on a plurality of support rails;

a controllable actuator configured for extending and retracting said inner cylinder with respect to said outer cylinder; and

a dexterous nozzle tip coupled to said inner cylinder.

57. A nozzle assembly as recited in claim **56**, wherein said universal joint further comprises:

an upper tray configured for mounting to a conduit; and

a lower tray mounted to said upper tray with a plurality of spring tensioned fasteners disposed radially around the periphery of said upper tray and said lower tray;

said lower tray pivotally coupled to said outer cylinder.

58. A nozzle assembly as recited in claim **57**, wherein said universal joint further comprises:

a plurality of flexible bearings evenly disposed within a annular channel of said upper tray;

wherein said nozzle assembly can rotate axially.

59. An apparatus as recited in claim **58**, wherein said nozzle assembly further comprises:

means for causing the axial rotation of said nozzle assembly.

60. An apparatus as recited in claim **59**, wherein said means for causing axial rotation of said nozzle assembly comprises:

a set of teeth extending radially from said upper tray; and

a motor with a sprocket configured to engage said teeth;

wherein actuation of the motor caused the axial rotation of said nozzle assembly.

61. A nozzle assembly as recited in claim **56**, wherein said controllable actuator for extending and retracting said inner cylinder from said outer cylinder comprises:

at least one pair of long stroke cylinders having first and second ends;

said first ends mounted to said outer cylinder and said second ends mounted to said inner cylinder.

62. A nozzle assembly as recited in claim **56**, wherein said dexterous nozzle tip comprises:

a nozzle bracket pivotally mounted to said fly;

said bracket coupled to a flexible tube mounted to a distal end of said inner cylinder;

said flexible tube having a nozzle mouth; and

at least one pair of long stroke cylinders mounted to said nozzle bracket;

wherein differential actuation of said long stroke cylinders pivots said nozzle bracket.

63. A vacuum nozzle assembly, comprising:

a cylindrical base;

a universal joint configured for coupling said cylindrical base to an intake conduit;

said universal joint having an upper tray configured for mounting to said intake conduit;

said upper tray having an annular channel;

said upper tray having a plurality of teeth;

a motor having a gear operably engaging said teeth of said upper tray;

a lower tray mounted to said cylindrical base;

a plurality of flexible bearings evenly disposed within said annular channel of said upper tray;

a plurality of spring tensioned fasteners disposed radially around the periphery of said upper tray tube and said lower tray;

a fly slidably coupled to said cylindrical base;

said fly disposed within the cylindrical base on a plurality of support rails;

a nozzle bracket pivotally mounted to said fly;

said bracket coupled to a flexible tube mounted to a distal end of said inner cylinder;

said flexible tube having a nozzle mouth; and

at least one pair of long stroke cylinders having first and second ends;

said first ends mounted to said cylindrical base and said second ends mounted to said nozzle bracket;

said long stroke cylinders configured for actuation by a user.

* * * * *