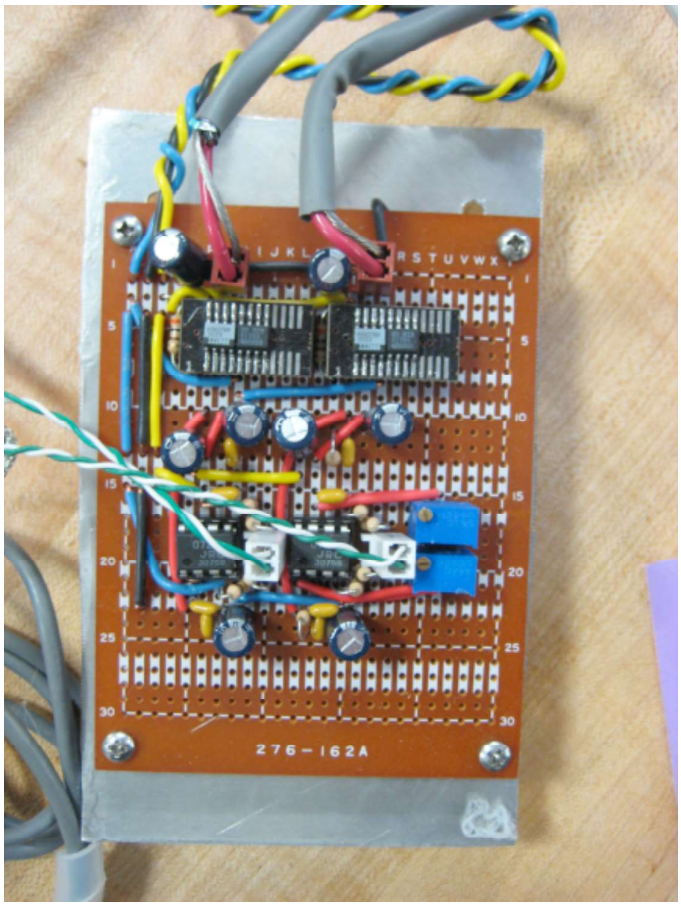

Figure 3-15: Filtration and amplification circuit for instrumentation

Because the amplification stages are not exact due to slight variances in component values of the electronics, it was necessary to calibrate the load and torque sensors. This was done through the National Instruments Measurement and Automation Explorer application using known masses for the load cell, and a calibrated torque wrench for the torque sensor.

3.3.1.8. Software

A LabVIEW virtual instrument (VI) was used to control the motor's motion, read the data from the sensors, and to parse the data into smaller, similar chunks and determine

Copyright 2011, AHMCT Research Center, UC Davis

average values for several key characteristics. The code for the VI can be found in Appendix B: LabVIEW VI.

The VI was written such that the user could easily configure it to the desired speed, angular distance traveled per half-cycle, and number of cycles (defined as one complete back-and-forth rotation) to perform. The speed was set by altering the peak-to-peak amplitude of the output to the motor, and the angular distance traveled was set by altering the frequency. The number of cycles was set by entering the desired number of cycles, dividing this number by the product of the desired frequency and the loop rate (which remained constant at 50 ms), and setting the result as the number of times the acquisition loop should run.

Each sensor was polled by the VI, and a value taken. The value of the encoder at each step had the previous encoder value subtracted from it, which resulted in the change in angle (θ) between successive runs of the loop $(\Delta\theta)$. This was divided by the difference in time between each successive run, which resulted in $\Delta\theta / \Delta t$, which is the instantaneous angular speed of the motor shaft. The speed, torque and load values were then filtered and, along with time data, put into a 2-D array. This array was then passed to another loop that divided each element into successive half-cycles. Each half-cycle was examined for four specific key values: for the torque, the mean value of each half-cycle was taken; for the speed, the max of each half-cycle was taken; and for the load, both the mean load and the max load for each half-cycle were taken. Each was used to build a 1-D array of each value, so that at the end of the loop there were four arrays of the mean torque, mean and max loads, and max speed, with one value taken from each half-cycle.

Copyright 2011, AHMCT Research Center, UC Davis

Finally, the mean values of each array, along with their widths and standard deviations, were taken and written to a measurement file.

3.3.1.9. Test Procedure

The test began by first opening the VI and turning on the DAQ. Doing these steps first prevented the motor from turning itself on. Next, the power to the sensors and instrumentation amplifiers was turned on, followed by the motor signal amplifier and motor power. All equipment was left on for roughly 10 minutes before beginning the test in order to allow everything to come to steady-state, if needed.

Next, the chart displaying the factor levels corresponding to the run number was consulted for the proper configuration. For example, if run 10 was to be performed, then the proper configuration was high speed, low mass, bristle brush, and 1160 film present. The proper sign type was then loaded onto the test bed, and the graffiti remover chemical was applied to the sign. Next, the proper brush was attached to the motor and the proper speed was set in the VI. Finally, the proper amount of mass was added to the cord attached to the handle of the test fixture. The test was not begun until a minute or so after the graffiti removing chemicals were applied to the sign in order to allow most of the carrier solvent to evaporate (the chemical would take on a dull appearance). This was done in order to ensure that there was no solvent acting as an additional lubricant between the brush and sign interface, which would show up as an increasing (and thus inaccurate) level of torque for the duration of the run. Once the solvent evaporated sufficiently, the brush was lowered onto the sign, and the run was started.

After each run was completed, data from the measurement file was copied into an Excel spreadsheet, and the sign was removed from the test bed, given an initial wipe-

Copyright 2011, AHMCT Research Center, UC Davis

down with a dry paper towel to remove excess chemical, and then (in accordance with the chemical manufacturer's instructions) rinsed off with water and wiped dry. Finally, each sign was labeled with the replication number, date, run number, factor levels and number of cycles.

Once all replicates of the test were run, the resulting coefficients of retroreflectivity (R_A) were measured for each sign, to be later compared against control values. The R_A values were taken using a Model 920L field retroreflectometer manufactured by Advanced Retro Technology, Inc. First, the retroreflectometer was calibrated using two different materials of known R_A, by using the two knobs on the end of the retroreflectometer (Figure 3-16). The first material was a flat black felt surface with an R_A of zero, by which the retroreflectometer was zeroed out. The other material was a small piece of encapsulated glass bead retroreflective film with a known R_A of 308.

Figure 3-16: Retroreflectometer; Detail of calibration knobs and readout

Copyright 2011, AHMCT Research Center, UC Davis

Once the retroreflectometer was calibrated, the R_A values of the control samples were taken. The standard method for taking the readings, as dictated by the manufacturer, was to take a measurement at roughly 0° orientation, another at the same spot but with the retroreflectometer rotated roughly 90°, and then to average these two measurements. This average value counts as one reading.

A similar method was used to obtain the R_A for the signs under test, with the exception of the reading at the center of the sign. This was not taken because of the different geometries of the brushes; the scouring pad contacted the center of the sign, while the bristle brush did not. Thus the two points read were located at the center top of the sign and the center right of the sign (Figure 3-3), and the R_A value for the sign was taken as the average between the two. The results were then recorded in an Excel spreadsheet and statistical analysis was performed on them.

3.4. Results

This section covers the results of the testing performed on the signs. First, the control values of the untouched signs will be given. These values were used as the baseline from which a drop in R_A is calculated for the 2^4 factorial experiment. Then, the results from this experiment will be examined, and the effects and interactions of the factors will be revealed. These aspects will then be used to create a rough regression model, which will suggest the direction that further experimentation should take.

3.4.1. Control Values

Table 3-2 shows the values obtained from the control samples. For the signs with the 1160 film, the control R_A is 626.0 ± 11.0, and for the signs without the 1160 film the R_A is 578 ± 25.9. Note that there is a fairly large amount of variation in the values, even on

Copyright 2011, AHMCT Research Center, UC Davis

the same sign. It is believed that the reason for this variation is that the orientation of the corner-cube retroreflective structures in the reflective layer alternate between 0° and 90° in 1 cm stripes. These stripes can be clearly seen in Figure 3-2. Since the area of the lens of the retroreflectometer is only 5.1 cm^2, it is likely that with each reading it will overlap these stripes differently, which will affect the reading. However, the method of averaging across all of the readings makes the final values less sensitive to these variations.

Copyright 2011, AHMCT Research Center, UC Davis

w/ 1160	0 deg	90 deg	avg	0 deg	90 deg	avg	0 deg	90 deg	avg		
con1	625.6	608.4	617.0	626.4	621.1	623.8	629.8	623.0	626.4		
con2	614.6	600.6	607.6	622.2	606.4	614.3	638.3	626.2	632.3		
con3	634.0	640.8	637.4	630.8	640.0	635.4	650.9	642.4	646.7		
con4	641.3	625.4	633.4	637.7	628.7	633.2	620.4	599.8	610.1		
con5	631.2	606.2	618.7	630.8	614.8	622.8	648.1	614.1	631.1	grand mean	std dev
										626.0	11.0
w/o 1160	0 deg	90 deg	avg	0 deg	90 deg	avg	0 deg	90 deg	avg		
con1	586.2	585.0	585.6	536.5	540.2	538.4	577.3	570.7	574.0		
con2	584.2	568.3	576.3	638.4	616.1	627.3	573.4	557.5	565.5		
con3	567.1	561.0	564.1	586.8	591.5	589.2	579.2	573.1	576.2		
con4	599.9	605.0	602.5	588.3	581.4	584.9	607.3	598.8	603.1		
con5	550.4	543.2	546.8	611.4	600.3	605.9	539.8	531.3	535.6	grand mean	std dev
										578.3	25.9

Table 3-2: Control values used in factorial experiment

3.4.2. Results of 2^4 Factorial Experiment — Retroreflectivity

Table 3-3 shows the contrast coefficients used in determining the effects and interactions of the factors under study, along with the raw and averaged drops in R_A from each run. The amount by which the R_A was reduced was calculated by subtracting the average R_A of the sign after cleaning from the average R_A indicated by the control value for that type of sign. For this reason, it appears that some of the values actually increased when cleaned, but what most likely happened is that the initial R_A of the sign was higher than the average value and the sign was damaged very little by the cleaning. The averaged values were used to estimate the effects and interactions of the factors.

Copyright 2011, AHMCT Research Center, UC Davis

																Drop in R_A			
Key:	1	2	3	4	12	13	14	23	24	34	123	124	134	234	1234	R1	R2	R3	AVG
1: Axial Load	-	-	-	-	+	+	+	+	+	+	-	-	-	-	+	-106.7	-206.1	-148.9	-153.9
2: Speed	+	-	-	-	-	-	-	+	+	+	+	+	+	-	-	-133.4	-263.6	-161.7	-186.2
3: Brush Type	-	+	-	-	-	+	+	-	-	+	+	+	-	+	-	-83.8	-141.8	-131.8	-119.1
4: 1160 Film	+	+	-	-	+	-	-	-	-	+	-	-	+	+	+	-165.1	-264.8	-228.9	-219.6
	-	-	+	-	+	-	+	-	+	-	+	-	+	+	-	-39.1	23.3	-40.8	-18.9
	+	-	+	-	-	+	-	-	+	-	-	+	-	+	+	-19.1	-21.3	-81.9	-40.8
	-	+	+	-	-	-	+	+	-	-	-	+	+	-	+	-58.1	-72.0	27.9	-34.1
	+	+	+	-	+	+	-	+	-	-	+	-	-	-	-	-31.6	-20.8	-44.2	-32.2
	-	-	-	+	+	+	-	+	-	-	-	+	+	+	-	-371.6	-356.7	-423.5	-383.9
	+	-	-	+	-	-	+	+	-	-	+	-	-	+	+	-391.0	-481.2	-391.0	-421.1
	-	+	-	+	-	+	-	-	+	-	+	-	+	-	+	-356.5	-385.0	-454.5	-398.7
	+	+	-	+	+	-	+	-	+	-	-	+	-	-	-	-431.4	-440.9	-409.4	-427.2
	-	-	+	+	+	-	-	-	-	+	+	+	-	-	+	-62.5	-73.0	-80.1	-71.9
	+	-	+	+	-	+	+	-	-	+	-	-	+	-	-	-51.9	-26.2	-98.2	-58.8
	-	+	+	+	-	-	-	+	+	+	-	-	-	+	-	-176.9	-199.3	-63.3	-146.5
	+	+	+	+	+	+	+	+	+	+	+	+	+	+	+	-180.9	-32.4	-68.5	-93.9
Divisor	8	8	8	8	8	8	8	8	8	8	8	8	8	8	8			Grand mean	-175.4

Table 3-3: Contrast coefficients, raw and averaged data for R_A

In order to show that the data are distributed normally, thus making this analysis relevant, the residuals were calculated and used to generate a normal probability plot. The residuals are calculated by

$$\overline{y} - y \tag{3.2}$$

which is the difference between the actual data point and the grand mean over all data points. Figure 3-17 shows the plot. Although the data are somewhat spread out, they appear to be normally distributed, and so the following analysis methods are most likely relevant.

Copyright 2011, AHMCT Research Center, UC Davis

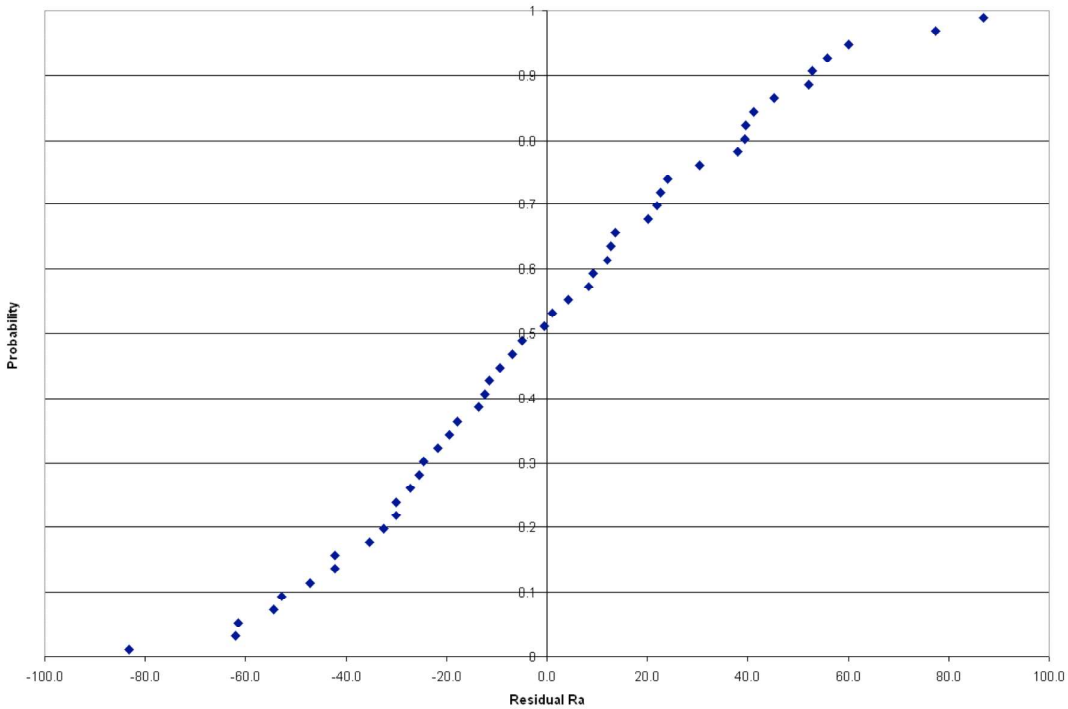

Figure 3-17: Probability plot of residuals for R_A data

The effects and interactions of the factors were calculated by multiplying the average R_A's for a given run by the signs indicated in the column of the factor of interest. Then these values were summed and divided by the divisor shown in that column. This results in the difference between the two averages of the "positive" values and the "negative" values (for more clarification on the calculations see Appendix C: Sample Statistical Calculations). For instance, to calculate the interactions between factors 1 and 2, the values in the AVG column are multiplied by the signs in the 12 column, then summed and divided by 8 (Table 3-3). The values obtained from this process are shown in Table 3-4 along with the standard error. These values were ordered and put into a normal probability plot (Figure 3-18), where it becomes apparent that the effects from 3, 4 and 34 (in bold) are likely to be significant because they lie well off the "error line" and are almost certainly not due to noise. Recall that factors 3 and 4 are the brush type and the

Copyright 2011, AHMCT Research Center, UC Davis

presence of the 1160 protective film. Thus, it would appear that any drop in R_A is dependent on these two factors and to a lesser extent their interaction with one another.

Factor	Estimated E&I ± SE
1	-19.1 ± 27.4
2	-17.0 ± 27.4
3	**226.6 ± 27.4**
4	**-149.6 ± 27.4**
12	0.5 ± 27.4
13	30.5 ± 27.4
14	19.1 ± 27.4
23	-12.1 ± 27.4
24	-15.7 ± 27.4
34	**88.4 ± 27.4**
123	15.4 ± 27.4
124	11.5 ± 27.4
134	2.3 ± 27.4
234	-10.1 ± 27.4
1234	-7.6 ± 27.4

Table 3-4: Calculated effects and interactions, and standard errors

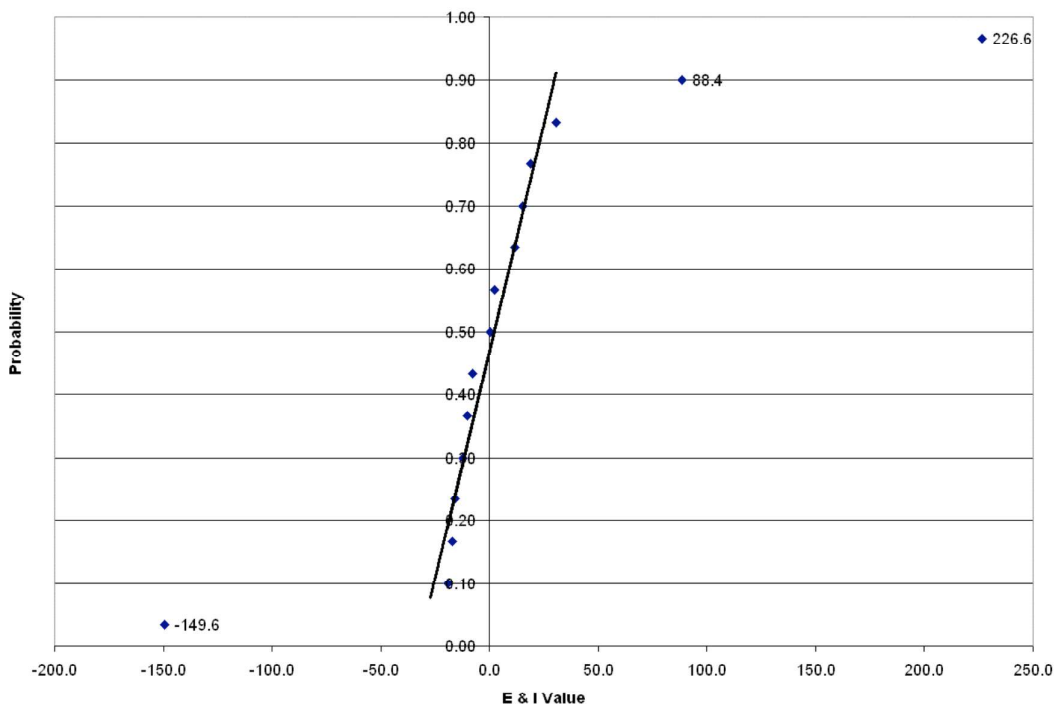

Figure 3-18: Probability plot of ordered effects and interactions

Copyright 2011, AHMCT Research Center, UC Davis

Knowing the factors that influence the amount of damage caused to the sign, a fitted model can be created from the calculated effects, as follows:

$$\hat{y} = -175.4 + \left(\frac{226.6}{2}\right)x_3 - \left(\frac{149.6}{2}\right)x_4 + \left(\frac{88.4}{2}\right)x_3x_4 \qquad (3.3)$$

where x_3 and x_4 take the value -1 or +1 according to the columns of signs in Table 3-3. Using this model, the reduction in R_A can be predicted as shown in Table 3-5, which would indicate that, in order to avoid substantial damage, the use of the bristle brush should be avoided on signs with the 1160 protective film. On inspection of those sign samples that had the 1160 film and were cleaned with the bristle brush, it appeared that the reason for the drop in R_A was indeed due to the bristles' scratching the film.

x_3	x_4	Predicted Drop in R_A
-	-	-169.7
+	-	-31.5
-	+	-407.7
+	+	-92.8

Table 3-5: Predicted reduction in R_A from fitted model

Also of importance is the fact that neither the axial force applied to the sign nor the speed at which the brush rotated had any apparent effect on the R_A. This is useful because it allows further testing to use a high load and high speed without worry of damage, so long as they are kept within the ranges used in the test. Additionally, all damage appears to have been caused only to the films that overlay the retroreflective structure, and not to the structure itself. This would seem to indicate that the microprismatic structure is more robust than had been thought, or is sufficiently protected from harm by the overlying layers.

3.4.3. Results of 2^4 Factorial Experiment — Torque

Table 3-6 shows the raw and averaged torque values from each run in the experiment.

Copyright 2011, AHMCT Research Center, UC Davis

Run	T1	T2	T3	Avg T
1	0.16	0.19	0.19	0.18
2	0.38	0.45	0.44	0.42
3	0.18	0.17	0.18	0.18
4	0.45	0.50	0.48	0.48
5	0.26	0.29	0.24	0.26
6	0.55	0.60	0.54	0.56
7	0.27	0.28	0.28	0.27
8	0.60	0.67	0.67	0.65
9	0.13	0.19	0.18	0.16
10	0.41	0.47	0.45	0.44
11	0.18	0.18	0.19	0.18
12	0.45	0.45	0.47	0.46
13	0.31	0.32	0.37	0.33
14	0.87	0.97	0.74	0.86
15	0.25	0.34	0.39	0.33
16	0.71	0.97	1.06	0.91
			Grand Mean	0.42

Table 3-6: Raw and averaged torque values, in N-m

However, if the residuals are calculated and plotted in a fashion similar to Figure 3-17, the result is Figure 3-19. Note that the residuals do not appear to be distributed normally about the mean, which indicates that further investigation of the effects and interactions of the factors may not be accurate. However, it should be enough, looking at the raw data, to notice that the highest levels of torque appear in the runs which used the scouring pad on the 1160 film at high load (runs 14 and 16). The next highest levels of torque appear in the runs which used the scouring pad without the 1160 film at high load (runs 6 and 8). This may be enough information to suggest a motor size, given a particular brush choice and axial load.

Copyright 2011, AHMCT Research Center, UC Davis

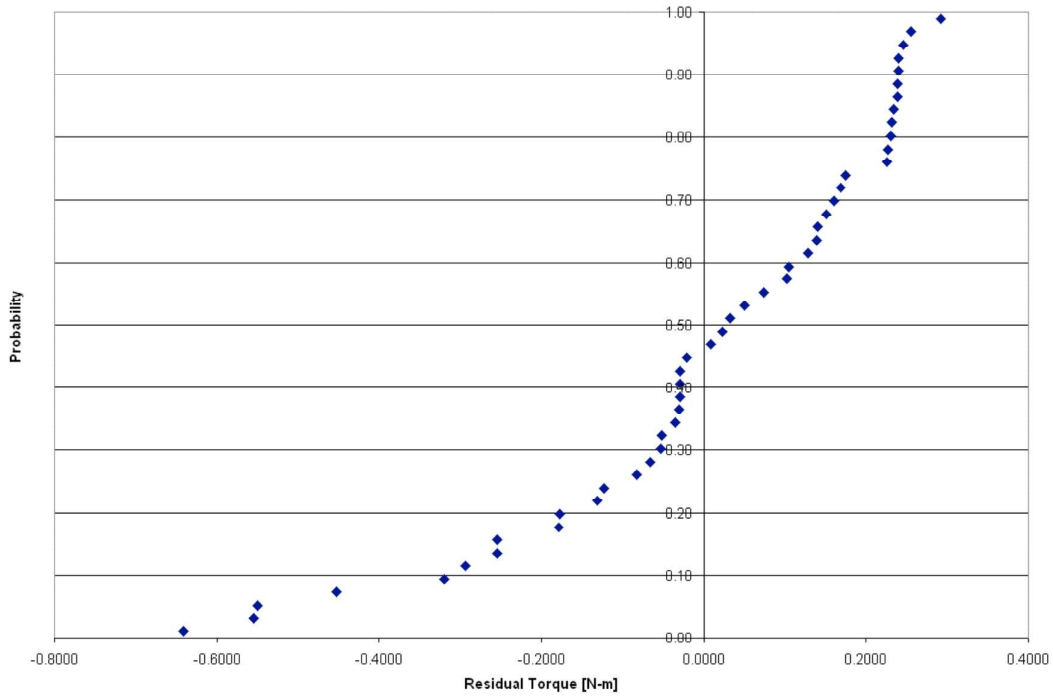

Figure 3-19: Probability plot of torque residuals

3.4.4. Further Testing

Because the results of the factorial experiment seemed to indicate that degradation of a sign's reflectivity is not affected by the load or speed of the cleaning implement, all further testing used high levels for both of these values. However, the brush type and presence of the 1160 film were still varied. First, a test using a polystyrene brush was conducted. Next, both the polystyrene brush and scouring pad were used to clean painted signs. Then, multiple cleanings on the same sign were investigated, followed by multiple cleanings on painted signs.

3.4.4.1. Polystyrene Brush

This test was run similarly to the factorial experiment; however, it only used one type of brush, so the only variable was the presence of the 1160 film. The polystyrene brush

Copyright 2011, AHMCT Research Center, UC Davis

used had softer bristles than the polypropylene brush, and it was believed that it might produce less damage to the sign. Table 3-7 shows the results from the test.

		Drop in Ra		
Run	1160	R1	R2	AVG
1	-	-7.42	-62.87	-35.1
2	+	-275	-225.6	-250

Table 3-7: Results from polystyrene brush test

From these results it would appear that, as in the factorial experiment, the use of the brush on the 1160 film seems to cause a significant amount of damage to the sign, which seemed on visual inspection to be due to scratching on the protective film.

3.4.4.2. Painted Signs — Single Run

For this test, the sign samples were painted with a layer of flat black spray paint such that the film on the surface of the sign was no longer visible and allowed to cure for 48 hours. The variables for the test were the brush type (polystyrene and scouring pad) and the presence of the 1160 film. This resulted in 4 runs, which were duplicated once. The tests ran for 40 cycles, just as they had in the previous experiments, and the cleaning fluid was applied in the same manner. Table 3-8 shows the results from this test.

	Brush	1160?	Drop in Ra		
Run	1	2	R1	R2	Avg Y
1	-	-	-89.0	-65.6	-77.3
2	+	-	-57.0	-48.5	-52.8
3	-	+	-263.0	-164.6	-213.8
4	+	+	-23.3	-121.3	-72.3

Table 3-8: Results of single run test on painted signs

Again it would appear that the most damage to the sign was caused by the use of the brush on the signs with the 1160 film. However, there was quite a bit of difference between the duplicate runs with the film present (runs 3&4). Upon inspection of the signs, this appeared to be caused by a layer of residue on the sign left over from the

Copyright 2011, AHMCT Research Center, UC Davis

cleaning fluid, which could not be removed even with vigorous rubbing. This residue can be seen in Figure 3-20 as a mottled appearance in the cleaned area. Initially this was thought to be due to the paint adhering to signs with the 1160 film better than to those without, but further testing revealed that this was probably not the case. Instead, it was probably due to a lack of sufficient cleaner being used to remove the paint. Also, it appeared partway through the test that the paint seemed to be removed from the sign before the 40 cycles had passed, meaning that the runs could be of a much shorter duration. Thus, for future tests, the number of cycles was reduced from 40 to 20.

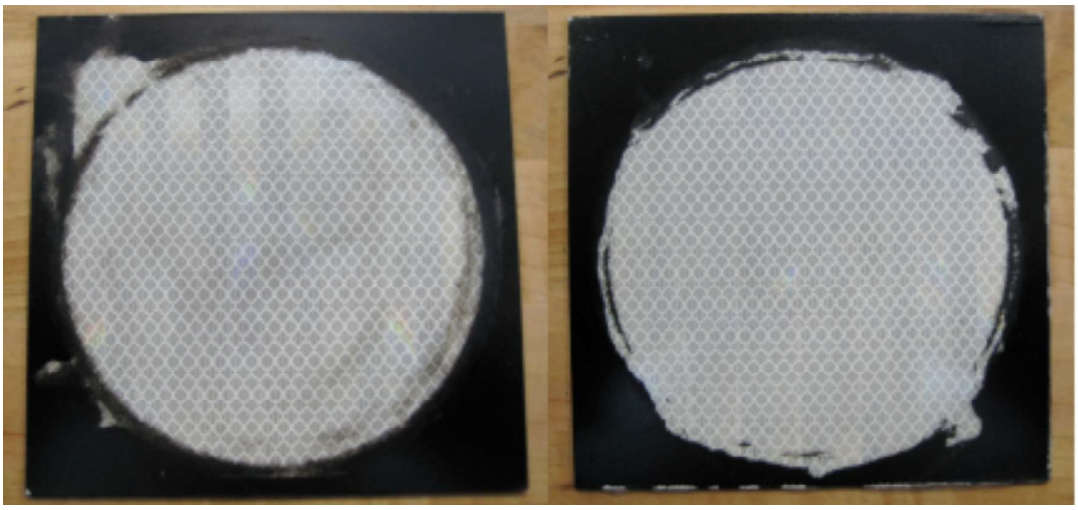

Figure 3-20: Comparison of cleaned signs; Left with 1160, Right without.

3.4.4.3. Multiple Cleanings on One Unpainted Sign

For this test six signs—three with 1160 film, and three without—were subjected to a total of five cleanings each. Only the scouring pad was used, as by this point it had become apparent that bristle brushes tended to damage the sign more. Additionally, a brand-new scouring pad was used in order to determine if pad wear had an effect on the outcome. The decision to do this was based on the perception that a new pad felt much

Copyright 2011, AHMCT Research Center, UC Davis

rougher than a used one. Figure 3-21 shows the change in R_A for the signs without the 1160 film, and Figure 3-22 shows the change for those signs with the film.

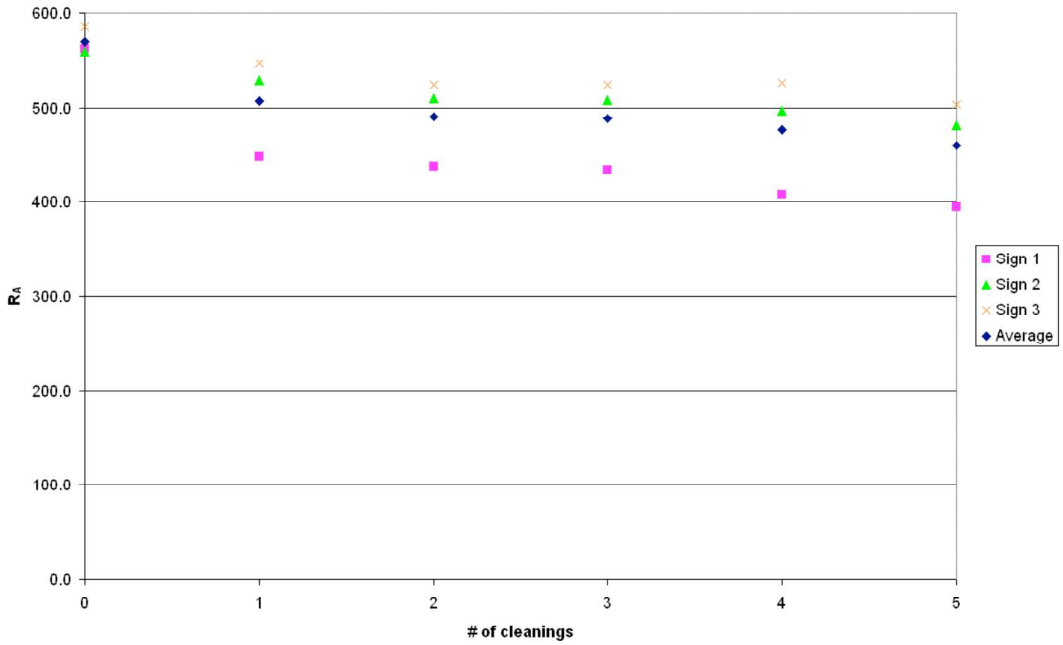

Figure 3-21: Results from multiple runs w/o 1160 film

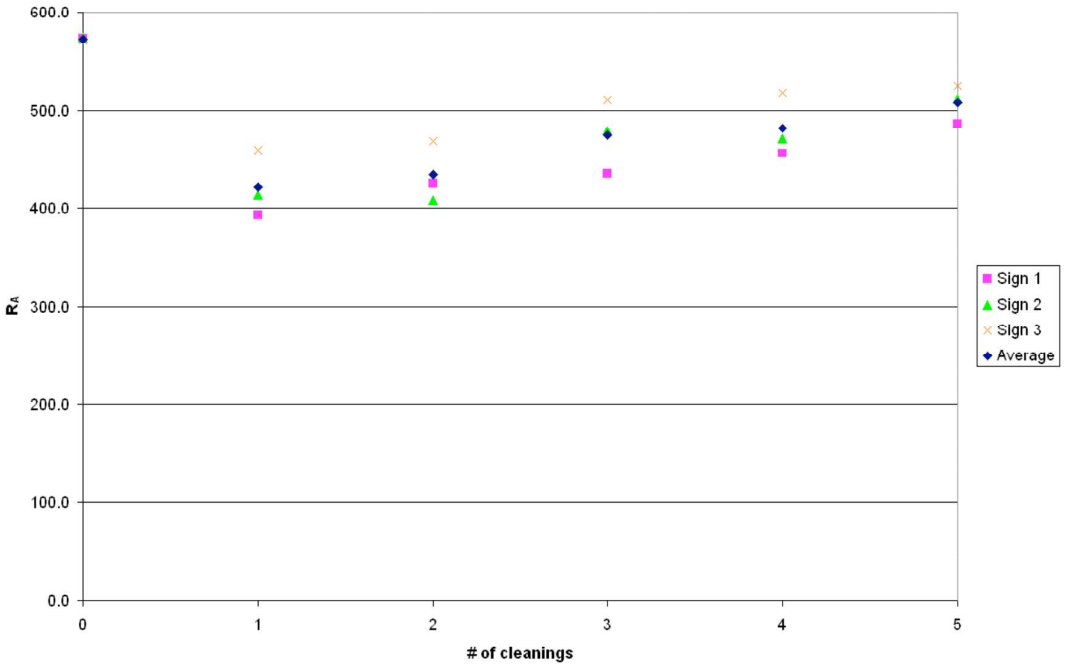

Figure 3-22: Results from multiple runs with 1160 film

Copyright 2011, AHMCT Research Center, UC Davis

These results were somewhat surprising. With the results from the factorial experiment, it was thought that the R_A would degrade steadily over several cleanings. Instead, what happened is the reduction in RA leveled off, and in the case of the signs with the 1160 film actually began to improve dramatically. Visual inspection of the signs after the initial tests showed a fair amount of scratching on the surface from the new pad, but over time the samples began to regain a shiny surface again. It is thought that the reason for these results was probably a combination of pad wear and the characteristics of the cleaner. After the first few uses, the surface of the pad took on a noticeably softer feel which seemed to reduce its abrasive qualities. Additionally, once the SEI Graffiti Remover was applied and the solvent allowed to evaporate, the cleaner that was left behind had a waxy consistency which may have aided in "polishing" the sign. At any rate, it appeared that it was possible to clean the signs multiple times without significant damage, as the R_A levels never approached the minimum levels mandated by the FHWA.

3.4.4.4. Multiple Cleanings on One Painted Sign

For the last test in the series, attempts were made to simulate a situation likely to be faced by maintenance workers: cleaning a sign that has been painted multiple times. The paint used was the same flat black spray paint used in the single-run test, was applied the same way and allowed to cure for at least 48 hours each time. Due to time constraints, only four cleanings were possible. Again, both signs with and without the 1160 film were tested, and the tests were run for 20 cycles. The pad used was the same one from the previous test, indicating that initial damage should not be a problem. Figure 3-23 shows the results from the signs without the 1160 film, and Figure 3-24 shows the results from those with the film.

Copyright 2011, AHMCT Research Center, UC Davis

Vermeer Manufacturing Company – Ex. 2044
Kubota v. Vermeer
IPR2025-00169
Page 101 of 124

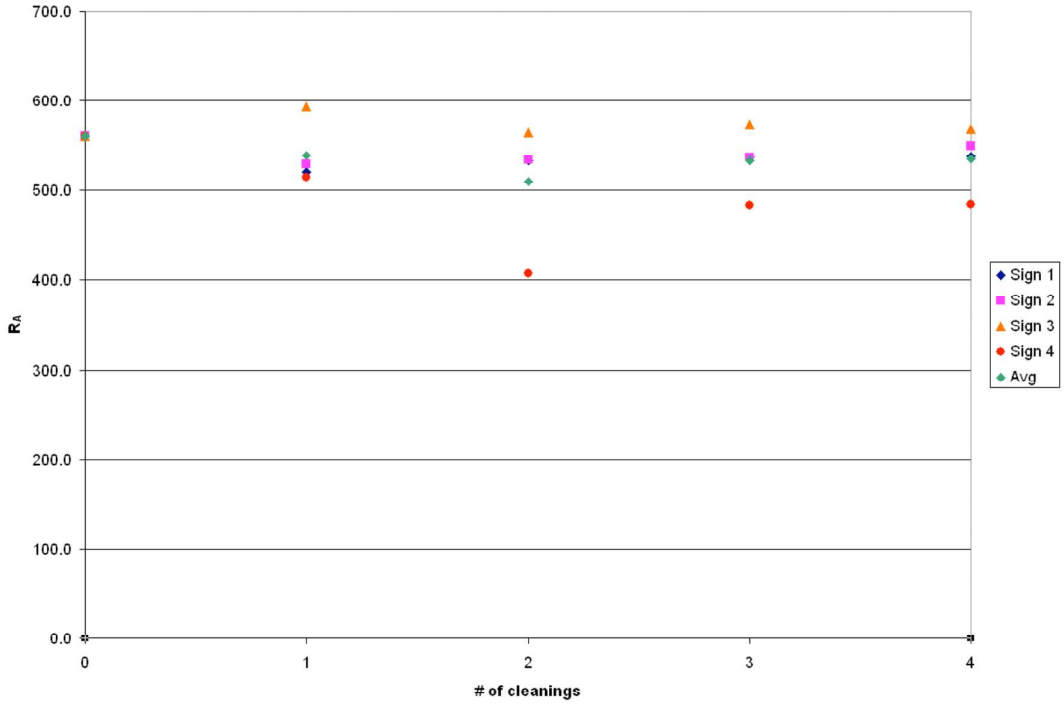

Figure 3-23: Multiple cleanings on painted signs w/o 1160

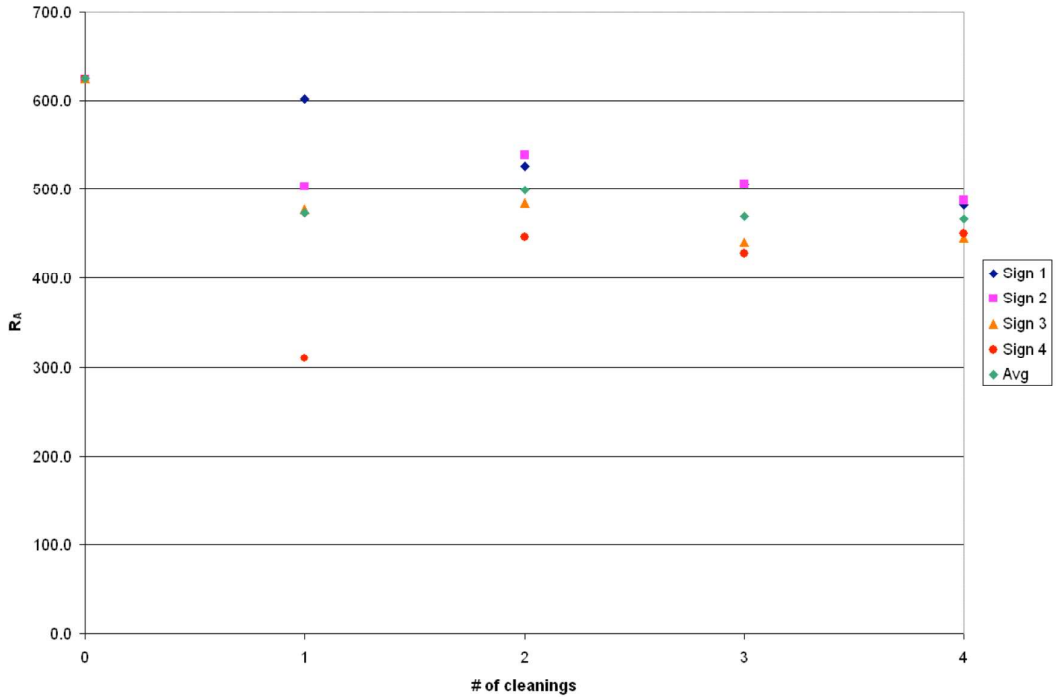

Figure 3-24: Multiple cleanings on painted signs with 1160

Copyright 2011, AHMCT Research Center, UC Davis

While these results are not as dramatic as those from the previous test since none of the signs improved over several cleanings, it is notable that the R_A never really got close to the FHWA minimum levels. This indicates that it is probably possible to use the proposed design of a motorized pad and chemicals to clean a sign.

3.5. Conclusion

This chapter began by describing the concept of the end effector of the sign cleaning tool, and illustrated the need to determine the behavior between it and the sign surface. Next, a 2^4 factorial experiment to determine the effects and interactions of certain factors on the R_A of the sign was developed, and its setup and procedure described. Then the results of the experiment were revealed, indicating a direction for further testing and development. Finally, more tests using both a different brush and multiple cleanings were described, and their results explained.

Copyright 2011, AHMCT Research Center, UC Davis

Vermeer Manufacturing Company – Ex. 2044
Kubota v. Vermeer
IPR2025-00169
Page 103 of 124

Chapter 4. Conclusions and Recommendations

4.1. Introduction

This chapter will use the results of the tests in the previous chapter to make recommendations about the end effector of the sign cleaning tool. First, the feasibility of the proposed design for the end effector will be discussed. Then, the torque data will be examined, and a recommendation made. Next, some recommendations about the use of cleaning fluid will be made. Finally, some recommendations for further testing will be made, with the purpose of more closely simulating actual sign conditions.

4.2. Feasibility of Proposed Design of the End Effector

From the tests performed on the signs, it appears that using an end effector with a soft scouring pad and oscillating motion is a feasible idea, as far as damage to a sign is concerned. The feature of having a disposable pad that attaches to a permanent base by a hook-and-loop structure is a bonus because it reduces the amount of waste and cost associated with the tool, and also allows both sides of the pad to be used, effectively doubling its life and further reducing waste and cost. The concern of having a new pad damage the sign, as indicated in the test in Section 3.4.4.3, is not a major concern because the amount of damage was relatively low and did not cause the reflectivity to approach the minimum FHWA mandated levels. However, that test used a new pad on a new sign; if it is determined that there is a concern of a new pad causing too much damage to a sign whose R_A is already reduced, then it may be necessary to "pre-wear" the pad on a scrap sign before it is actually used to clean.

Copyright 2011, AHMCT Research Center, UC Davis

4.3. Recommendations from Torque Data

The maximum levels of torque recorded were around 1 N-m (8.85 in-lb) for the scouring pad at high load on the 1160 film. Since this configuration most closely resembles that of the tool as designed, this value for the torque should be used when selecting a motor. However, note that this value is for only one pad, and the proposed design uses three pads, which results in a total torque requirement of 3 N-m (26.6 in-lb). Depending on the final configuration of the drive system for the pads, this is an achievable value.

4.4. Amount of Cleaning Fluid Used

It became apparent over the course of the paint-removal tests that a large amount of cleaner could be used, since this seemed to improve the amount of paint removed. However, to use the cleaner only once could be too costly, since it tends to be expensive and must be disposed of properly as hazardous waste. Therefore, the idea of circulating and filtering the paint particles from the cleaning fluid should be investigated. Alternatively, the fluid recovered from the surface could later be allowed to sit and the paint solids allowed to settle at the bottom. Then, the cleaning fluid could be decanted off the top and used again, and the sludge of particles at the bottom removed for disposal. However, this results in more contact with the fluid by the worker, as well as increasing the risk for spills.

4.5. Opportunity for Further Testing

More tests could be performed to more closely simulate the conditions a sign would face on the roadside. Caltrans has developed a test, CT684 [33], which is used to determine the effectiveness of graffiti removal products for inclusion in the Qualified Products List. It consists of reflective sign panels which are inked with different colors,

Copyright 2011, AHMCT Research Center, UC Davis

Vermeer Manufacturing Company – Ex. 2044
Kubota v. Vermeer
IPR2025-00169
Page 105 of 124

and half of which are also coated with a protective film like the 1160. These samples are then painted and artificially weathered by being placed under a xenon arc lamp for a certain number of hours, occasionally being sprayed with water. Performing tests on samples such as these using the test fixture from the previous experiments would determine with even greater accuracy whether the end effector is a feasible design.

4.6. Conclusion

This report began the initial stages of development of a tool that could be used to clean graffiti off of signs. Research was done into the current best practices of graffiti removal, both by performing extensive literature searches and by interviewing persons who work in the field of graffiti removal. It was determined that, with the exception of signs, most methods of graffiti removal are well established and well developed. It was learned that signs present a particular problem due to their surfaces being sensitive to damage, as well as their awkward location for cleaning. As a result, most removal from signs is done by hand by maintenance personnel, which can expose them to hazards in the form of falls or stress injuries. Thus, a need was identified, and work began on a product that would fulfill that need.

The development of the tool began by interviewing maintenance personnel who often have to clean signs about their current methods, likes and dislikes. These statements were translated into a set of needs, which formed the basis for the function of the tool. A set of metrics was also developed by which certain aspects of the tool could be judged successful. Then, a set of target specifications was elicited, which would determine qualitatively the level of success of the metrics. Finally, several possible key aspects of the tool were discussed along with their pros and cons, and a final design was proposed.

Copyright 2011, AHMCT Research Center, UC Davis

Vermeer Manufacturing Company – Ex. 2044
Kubota v. Vermeer
IPR2025-00169
Page 106 of 124

At this point, the report switched from an overall development of the tool to a more specific development of the end effector of the tool. This was due to the unknown interaction between the end effector and the sign surface, which is arguably the most critical aspect of the design. A factorial experiment was developed to test the effects of load, speed, brush type and sign surface material on the retroreflectivity levels of the sign. The setup and procedure for this experiment was described, and then the results of both the experiment and further tests were revealed. It was determined that in order not to damage the surfaces of all types of sign, a soft scouring pad should be used. Further tests showed that this pad was also effective at removing paint, even over several painting cycles, without damaging the sign beyond an unacceptable level.

Finally, the recommendations based on these results were made, along with suggestions regarding cleaning fluid use and even further testing. From the research done in this report, it appears that a tool for cleaning signs is both feasible and desirable, and will enhance the speed and comfort related to removing graffiti from signs along the roadways.

Copyright 2011, AHMCT Research Center, UC Davis

References

1. California-Assembly, *"Tag, You're It!" Act*. 2006-2007 reg. sess. AB 528. Sacramento: OES, 2007. Web. 1 Jan. 2010.
2. Caltrans, *Maintenance Division Expenditures Fiscal Year-to-Date. IMMS Database. Section D60000-Graffiti.* Dec 2009.
3. Schweitzer, P., *Paint and Coatings - Applications and Corrosion Resistance*. 2006: Taylor & Francis Group, LLC.
4. Gommans, L.H.P., *Polysiloxane Coatings – A Mature Technology*, in *Corrosion & Prevention*. 2000.
5. Kruss, G. *Selected literature values for surface free energy of solids*. 2009 [cited; Available from: http://www.kruss.de/en/theory/substance-properties/solids.html.
6. Scheerder, J., N. Visscher, T. Nabuurs, and A. Overbeek, *Novel, Water-Based Fluorinated Polymers with Excellent Antigraffiti Properties.* Journal of Coatings Technology Research, 2005. **Vol 2 No 8**: p. 617-625.
7. Whitford, M.J., *Getting Rid of Graffiti: a practical guide to graffiti removal and anti-graffiti protection*. 1992, London: E & FN Spon.
8. Weisel, D.L., *Graffiti*, USDOJ, Editor. 2004.
9. Weaver, M.E., *Removing Graffiti from Historic Masonry*, N.P. Service, Editor. 1995.
10. Young, E., *Paint fight.* RIBA Journal, 2001. **Vol 108, No. 9**: p. P. 73-75.
11. Mowrer, N.R., *Polysiloxanes*. 2003, Ameron International.
12. Adhvaryu, K., *Maintenance Resident Engineer, Queens/Manhattan counties, New York*. Personal Communication, 2008.
13. Mack, R.C. and A. Grimmer, *The Cleaning and Waterproof Coating of Masonry Buildings*, N.P. Service, Editor. 2000.
14. Spur, G., E. Uhlmann, and F. Elbing, *Dry-ice blasting for cleaning: process, optimization and application.* Wear, 1999. **233-235**: p. 402-411.
15. Flaws, B., *Statewide Graffiti Coordinator*. Personal Communication, 2008.
16. Liu, K. and E. Garmire, *Paint removal using lasers.* Applied Optics, 1995. **34**(21): p. 4409-4415.
17. Salimbeni, R., R. Pini, and S. Siano, *A variable pulse width Nd:YAG laser for conservation.* Journal of Cultural Heritage, 2003. **4**: p. 72s–76s.
18. Freiwald, J. and D.A. Freiwald, *Commercialization PIan Laser-Based Decoating Systems*. 1998, US Department of Energy.
19. Garmire, E. and M. Hibben, *Laser Removal of Graffiti, Advanced Highway Sign Testing.* UCDARR-95-09-08-01. 1995, AHMCT, UC Davis: Davis, CA.
20. Tenbroek, G., *Maintenance Personnel, Oakland Sign Shop, Caltrans Dist. 4*. Personal Communication, 2008.
21. Dobeck, L., *Associate Chemical Testing Engineer, METS, Caltrans*. Personal Communication, 2008.
22. FHWA, *FHWA-SA-03-027 -- Maintaining Traffic Sign Retroreflectivity*. 2003.
23. Austin, R., *What are your measurements?* Roads & Bridges, 2004. **42**(2).
24. Ulrich, K.T. and S.D. Eppinger, *Product design and development*. 3rd ed. 2008, Boston: McGraw-Hill Higher Education.

Copyright 2011, AHMCT Research Center, UC Davis

25. Waters, T.R., V. Putz-Anderson, and A. Garg, *Applications Manual for the Revised NIOSH Lifting Equation*, NIOSH, Editor. 1994, US Dept. of Health and Human Services.
26. OSHA, *Occupational Noise Exposure - 1910.95*, Occupational Safety and Health Administration.
27. FHWA, *Traffic Noise Model Version 2.5 Look-Up Tables*. 2007.
28. Paysant, J., C. Beyaert, A.-M. Datié, N. Martinet, and J.-M. André, *Influence of terrain on metabolic and temporal gait characteristics of unilateral transtibial amputees.* Journal of Rehabilitation Research and Development, 2006. **43**(2): p. 153-160.
29. FHWA, *Standard Highway Signs*. 2004.
30. Blau, P.J., *Static and Kinetic Friction Coefficients for Selected Materials*, in *Friction, Lubrication, and Wear Technology*. 2002, ASM International.
31. Budynas, R. and K. Nisbett, *Shigley's Mechanical Engineering Design (Mcgraw-Hill Series in Mechanical Engineering)*. 8th ed. 2006: McGraw-Hill Science/Engineering/Math.
32. Caltrans, *Pre-Qualified Products List for Graffiti Removal and Preventative Products*. 2009.
33. Caltrans, *CT684: Method of Test for Anti-Graffiti Materials on Retroreflective Sheeting for HIghway Signs*. Nov 2006.
34. Box, G., J.S. Hunter, and W.G. Hunter, Statistics for Experimenters: Design, Discovery and Innovation. 2nd ed. 2005, Hoboken, NJ: John Wiley & Sons, Inc.

Copyright 2011, AHMCT Research Center, UC Davis

Appendix A: Results of Interviews

The following is a copy of the questionnaire used for the interviews, followed by the results of the interviews.

Name:_____
Position:_____

Graffiti Removal Methods Questionnaire

1. What does your department currently do for graffiti removal from the following?
    - Unpainted concrete
    - Painted concrete
    - Murals
    - Retroreflective signage
    - Galvanized steel
    - Painted metal

2. How does each of these methods work well, and why does your department use that method as opposed to another? For example, why paint instead of pressure wash or sandblast? Is it cost, speed, effectiveness?

3. What are the drawbacks or limitations of each of these methods? How do they not work well?

4. Is there anything you have tried that didn't work at all?

5. Is there anything you have tried that worked well but was too slow or expensive?

6. How much graffiti do you remove in your jurisdiction?

7. Contact info for other people in other departments?

Results of Interviews

PennDOT District 6-0 Roadside Specialist Supervisor
Interview date: 8/28/8
Reports that 80% of their removal method is overpainting, due to low cost and speed.
Surfaces:
- Unpainted concrete: High pressure wash, or paint over
- Painted concrete: Same
- Murals: N/A
- Retroreflective signage: High pressure wash
- Galvanized steel: Paint

Copyright 2011, AHMCT Research Center, UC Davis

- Painted metal: Paint

Benefits of methods, reason for using one over another: There is a high potential for lead paint to exist on structures from which graffiti is removed. Testing can be time consuming, so overpainting is the best choice. It is also less harmful to the environment.

Drawbacks of methods: Aesthetics of overpainting can be unsightly, pressure washing may leave ghosting.

Method tried that didn't work? Tried anti-graffiti coatings, both sac and non-sac. Both were cost prohibitive/ ineffective

Method that worked, but too slow or expensive?

Amount of graffiti removed? 240-250 yd^2/day

Highway Maintenance Engineer, Wisconsin DOT, SE district
Interview date: 8/28/8
Surfaces:

- Unpainted concrete: Paint over
- Painted concrete: Same
- Murals: N/A
- Retroreflective signage: Solvent-based cleaner
- Galvanized steel: Paint over
- Painted metal: Paint over

Benefits of methods, reason for using one over another: Uses overpainting due to time and convenience. Paint is color-matched at a paint store.

Drawbacks of methods: Expensive to purchase and match paint

Method tried that didn't work?

Method that worked, but too slow or expensive? Non-sac coating, too time-consuming

Amount of graffiti removed? Unknown

Maintenance Resident Engineer, Queens/Manhattan counties, New York
Surfaces:

- Unpainted concrete: Paint over old concrete, for new concrete (or new surfaces) they use a sacrificial coating, a hot wax that is spray applied. When tagged, it is power washed with hot water, then reapplied
- Painted concrete: Paint over
- Murals: N/A
- Retroreflective signage: Solvent-based cleaner

Copyright 2011, AHMCT Research Center, UC Davis

- Galvanized steel: Solvent
- Painted metal: Solvent

Benefits of methods, reason for using one over another: Sac coating is very easy to use and is quite effective. Painting is cheap and easy.

Drawbacks of methods: Sac coating must be immediately reapplied

Method tried that didn't work? Non-sac coating was only good for 3-4 removals before it started peeling off with power wash. It is also difficult to reapply the coating over previously coated surfaces because it doesn't stick

Method that worked, but too slow or expensive? Solvents are slow

Amount of graffiti removed? Unknown

Head of Graffiti Rangers, Seattle, WA
Surfaces:

- Unpainted concrete: Pressure wash or sandblast
- Painted concrete: Repaint, either with prematched city, county, state color scheme, or matched paint
- Murals: N/A
- Retroreflective signage: N/A (different jurisdiction)
- Galvanized steel: Solvents, from citrus based to paint strippers
- Painted metal: Repaint

Benefits of methods, reason for using one over another: Uses a wide range of methods, so each is used because it works the best. Choices made by trial and error, working from weakest method toward strongest.

Drawbacks of methods: None

Method tried that didn't work? Lots of chemicals don't work. Non-sac coating didn't work.

Method that worked, but too slow or expensive? Lots of chemicals are too slow

Amount of graffiti removed? In 2007, 336000 ft^2, 106000 tags removed

Graffiti Abatement Coordinator, Portland OR
Surfaces:

- Unpainted concrete: Pressure wash or paint with recycled paint that is close in color to concrete
- Painted concrete: Repaint with recycled paint, or with customer-supplied paint

Copyright 2011, AHMCT Research Center, UC Davis

Vermeer Manufacturing Company – Ex. 2044
Kubota v. Vermeer
IPR2025-00169
Page 112 of 124

- Murals: Contracts out—non-profits pressure wash or repaint mural, for-profit company (Goodbye Graffiti) uses their methods. Once, a non-sac coating was applied over a mural that worked well.
- Retroreflective signage: State highway jurisdiction; David Smith (ODOT) reports using chemicals on signs and aluminum colored paint on the backs of signs. Says that removal from uncoated silkscreened signs (e.g. stop) is a problem, since solvents remove screened graphics as well.
- Galvanized steel: Solvents
- Painted metal: Solvents

Benefits of methods, reason for using one over another: Repainting is cheap, generally they try for the best process they can find

Drawbacks of methods: With powerwashing, the unit has to hook up to water, so if there's no water close by, crew can't powerwash. Lots of graffiti on unpainted wooden fences, and powerwashing quickly degrades the fence. Reds and blues don't come out with PW (ghosting)

Method tried that didn't work? Tried sandblasting on one soft brick surface—destroyed the surface. If it's a historic building, they just contract with Goodbye Graffiti.

Method that worked, but too slow or expensive?

Amount of graffiti removed? Unknown, but reports indicate that incidents are increasing. Not sure if it's due to more graffiti, or just more awareness.

Community Service Officer, Graffiti Enforcement, Reno NV
Surfaces:

- Unpainted Concrete: Pressure wash or paint over with grey
- Painted concrete: Paint over. No matching, they use spray equipment with long hoses, so color changes are not possible, other than the 4 basic colors they have.
- Murals: Don't touch murals, it is up to the owner to touch it up.
- Retroreflective signage: Don't touch signs, that is the street department's jurisdiction. Believes they may be changing to signs with anti-graff coatings
- Galvanized steel: solvent wipes
- Painted metal: solvent wipes, or owner's responsibility to repaint to their color

Benefits of methods, reason for using one over another: Depends on surface—best method chosen for that particular surface. Ex: Can't use strong power wash surface of old fence, it gets destroyed. Needs to be painted or replaced. Can't sandblast porous surface, it etches the paint into the surface.

Drawbacks of methods: Sometimes removal is incomplete. Ex: Power wash on old fence doesn't get it off, must replace.

Copyright 2011, AHMCT Research Center, UC Davis

Method tried that didn't work? None, because they get rid of it, even if they have to replace the surface it is on (e.g. fence, sign)

Method that worked, but too slow or expensive? Coatings are expensive, but owners may use them if they wish (maintenance becomes their job). Many solvents are too slow/don't work.

Amount of graffiti removed? 1300 incidents/mo

District 7 Graffiti Coordinator, Caltrans
Surfaces:

- Unpainted Concrete: Paint over, unless it is around waterways, storm control, then it is left up
- Painted concrete: A chemical is sprayed on, which causes non-tar-based paints to blister up. It is then removed, and fresh paint is applied.
- Murals: Up to the artist to remove, generally using conservation methods. If graffiti is not removed, mural is removed and painted out
- Retroreflective signage: Since signs are coated with 3M film, solvent removers are used (wipes)
- Galvanized steel: Solvent removal
- Painted metal: Solvent removal

Benefits of methods, reason for using one over another: Use what works, especially in a given area. If a location is perpetually and heavily hit, painting is fastest and easiest, since they know they'll be back. Don't sandblast, because it can only be done once (degrades the surface badly)

Drawbacks of methods: Lots of paints can be hard to go over, especially if additives have been put in (e.g. silicone, graphite), so overpainting is sometimes ineffective without complete removal

Method tried that didn't work? Most citrus-based chemicals don't work, even if they do say they are reformulated. Physical barriers, are effective deterrents for a short while, but are eventually overcome (bent, broken)

Method that worked, but too slow or expensive? Farrow system—low pressure blast mix of ash, pumice and hot water. Worked, but too expensive.

Amount of graffiti removed? 3 million ft^2, $5.5 million per year

Civil Engineer, PennDOT district 11
Surfaces:

- Unpainted Concrete: Sandblast in high-visibility areas, frequently targeted areas get painted

Copyright 2011, AHMCT Research Center, UC Davis

Vermeer Manufacturing Company – Ex. 2044
Kubota v. Vermeer
IPR2025-00169
Page 114 of 124

- Painted concrete: Paint over, attempts to match with samples from Home Depot that are 2 shades darker than what is present. Does not use technical procedure
- Murals: don't touch (responsibility of owner)
- Retroreflective signage: Solvents, sometimes paint backs
- Galvanized steel:
- Painted metal:

Benefits of methods, reason for using one over another: Paint is simple to apply, quick, no mess. Can be done with one man, as opposed to sandblasting.

Drawbacks of methods: Difficult to blend paint on concrete. Sandblasting machine sometimes clogs, needs replacements

Method tried that didn't work? None, has never tried coatings

Method that worked, but too slow or expensive? none

Amount of graffiti removed? 160 hours painting, 300 hours blasting, both over 3 years

Operations Supervisor, Graffiti Removal Unit, SF DPW, San Francisco, CA
Surfaces:

- Unpainted Concrete: Use chemical remover, Heritage: apply and let sit, then power wash it off. Reapply if necessary.
- Painted concrete: Paint over. They have a van with a power washer, paint sprayer and computerized matching system
- Murals: Not allowed to touch them. Finds that most taggers respect the murals.
- Retroreflective signage: Solvent removers
- Galvanized steel: Solvents
- Painted metal: Paint over

Benefits of methods, reason for using one over another: Painting is fast and pretty effective, Heritage works on a wide range of surfaces and is also effective. Power washing is slow and time consuming, many methods (e.g. blasting) require extensive training, but painting does not.

Drawbacks of methods: Painting looks pretty crappy on awnings of businesses, since they are often custom colors and designs. None of the methods of removal work on acid-etched windows (which they don't deal with anyway—they are the owner's responsibility)

Method tried that didn't work? None really, except for awnings and glass. Tried non-sac coatings, but they started to wear off after a few removals.

Copyright 2011, AHMCT Research Center, UC Davis

Method that worked, but too slow or expensive? Heritage is expensive, but it works, so they use it.

Amount of graffiti removed? Roughly 700 incidents a month. Roving crews are assigned to a certain area, and try to be proactive in removal.

Program Coordinator, Denver Partners Against Graffiti, Denver CO
Surfaces:

- Unpainted Concrete: Gel stripper and power wash
- Painted concrete: Paint over with nearest matching color (they have 7 standard colors)
- Murals: Contact owner or artist to try and repaint or remove. They don't do it.
- Retroreflective signage: Soy-based solvent
- Galvanized steel: Soy, maybe stripper with PW if needed
- Painted metal: repaint

Benefits of methods, reason for using one over another: Cheap and work fairly well. Blasting would damage surface

Drawbacks of methods: Soy-based solvent removes graphics from older, non-coated signs. Sometimes people will try to do removal themselves, and graffiti ghosts, which is difficult to remove (e.g. black paint on blond brick)

Method tried that didn't work? They have chemical products shopped to them that often don't work

Method that worked, but too slow or expensive? No, haven't tried any kind of coatings

Amount of graffiti removed? 2.5M ft^2 last year, moving towards ~4M this year

Caltrans Maintenance Supervisor, District 4, Unit 712 (east bay)
Surfaces:

- Unpainted Concrete: Paint over. Uses recycled paint, have 10 colors but uses 4-5 often. Tried to get a color matching system, but it fell through. For overhead work: guy in a cherry picker with spray equipment.
- Painted concrete: Paint over
- Murals: Don't touch
- Retroreflective signage: Don't touch (sometimes paint backs)
- Galvanized steel: Paint
- Painted metal: Paint

Benefits of methods, reason for using one over another: Painting is cheap, fast and effective. Growing evergreen ivy on wall works well; only two incidents in ~25 years of taggers removing vegetation.

Copyright 2011, AHMCT Research Center, UC Davis

Vermeer Manufacturing Company – Ex. 2044
Kubota v. Vermeer
IPR2025-00169
Page 116 of 124

Drawbacks of methods: Getting to the surfaces (dangerous shoulder work), protecting pretty sound walls, cost of crew operation

Method tried that didn't work? Sacrificial coatings violated NPDES.

Method that worked, but too slow or expensive? Soda blasting took forever to use. Hot pressure washing has very high maintenance costs, along with burn danger to operator.

Amount of graffiti removed? Unknown, as he is head of crew, not in an office.

Eradication Component Supervisor, San Jose Anti-Graffiti Program, San Jose, CA
Surfaces:

- Unpainted Concrete: Power wash
- Painted concrete: Paint over—have a flatbed truck with power washer and 4 paint sprayers (standard scheme for city)
- Murals: don't touch
- Retroreflective signage: Graffiti wipes (Omega), weaker than solvent they use
- Galvanized steel: Solvent followed by P/W
- Painted metal: Paint over

Benefits of methods, reason for using one over another: Easy, convenient

Drawbacks of methods: Some ghosting on very porous masonry

Method tried that didn't work? None known. Current system in place for 10 years

Method that worked, but too slow or expensive? Non-sacrificial coatings—worked but turned white ("Drew alkali out of the masonry"), wore down after several cleanings

Amount of graffiti removed? 1990: 72000 tags. 2006: 2600 tags. Credits swift removal policies with steady decrease (within 24(gang) to 48(other) hours). 2007: 13000 tags

Copyright 2011, AHMCT Research Center, UC Davis

Vermeer Manufacturing Company – Ex. 2044
Kubota v. Vermeer
IPR2025-00169
Page 117 of 124

Appendix B: LabVIEW VI

The following images show the LabVIEW Virtual Instrument that was written for the factorial experiment. The images should be tiled from left to right to obtain an image of the entire program. The final image shows the front panel of the VI.

Copyright 2011, AHMCT Research Center, UC Davis

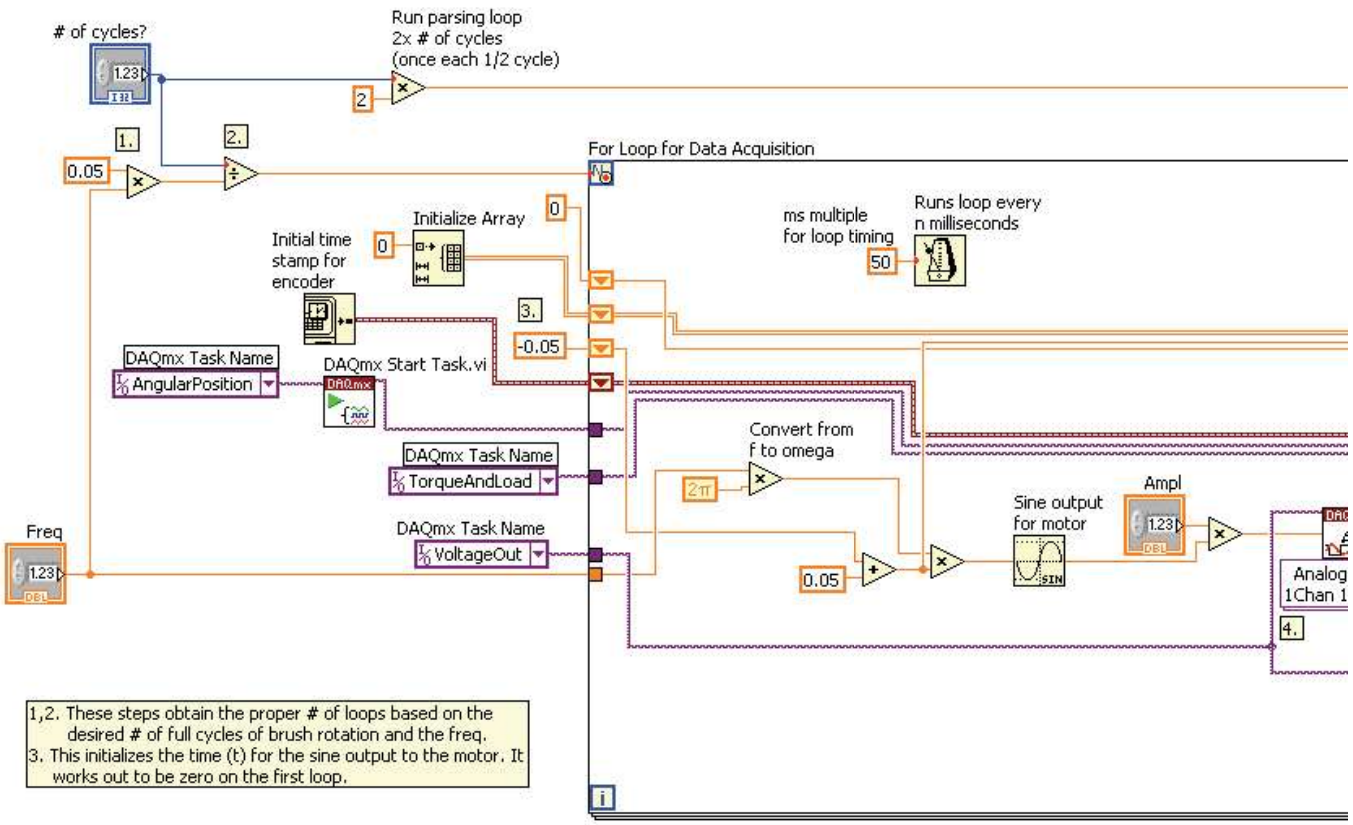

Figure 0-1

Copyright 2011, AHMCT Research Center, UC Davis

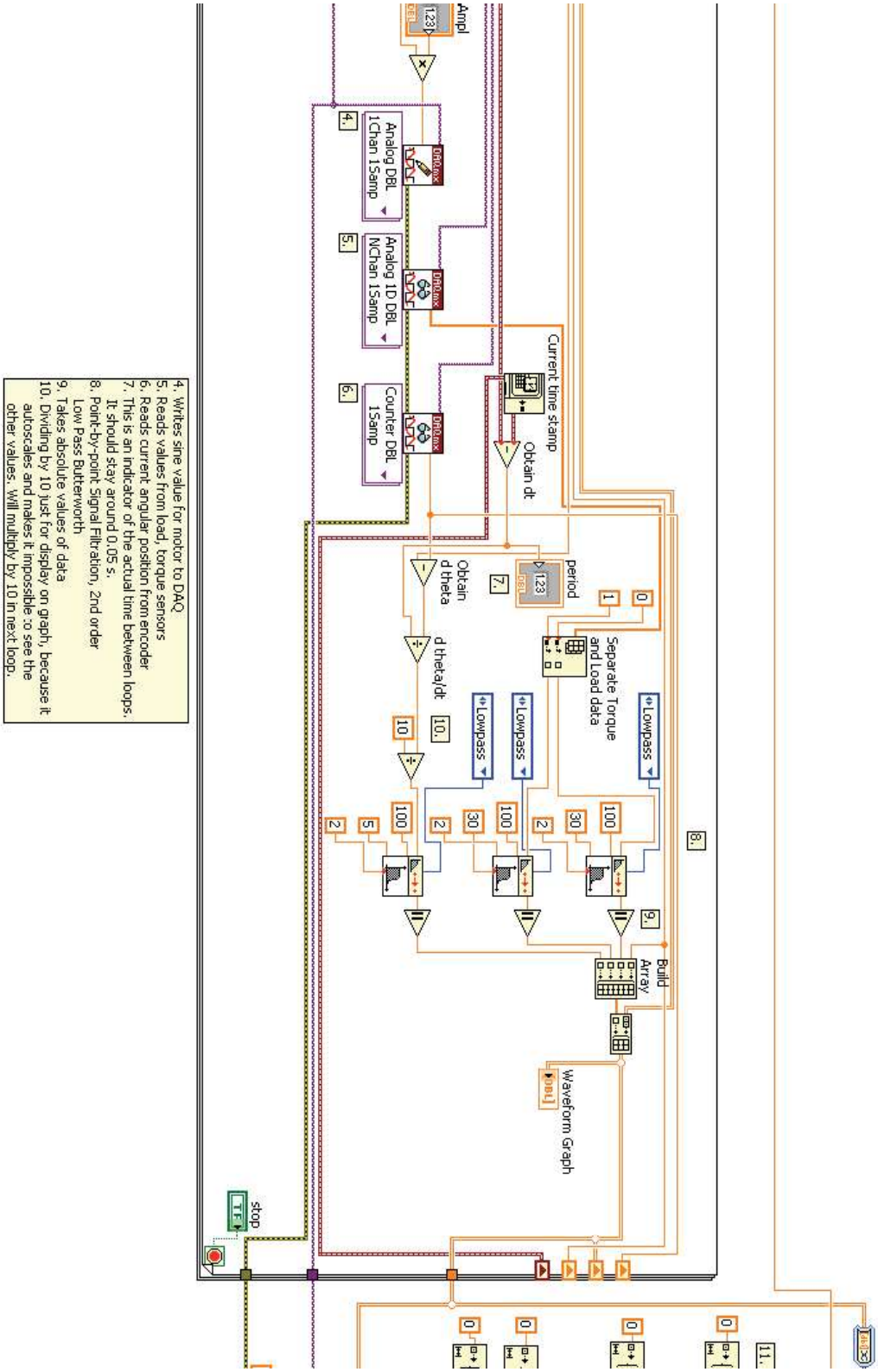

Copyright 2011, AHMCT Research Center, UC Davis

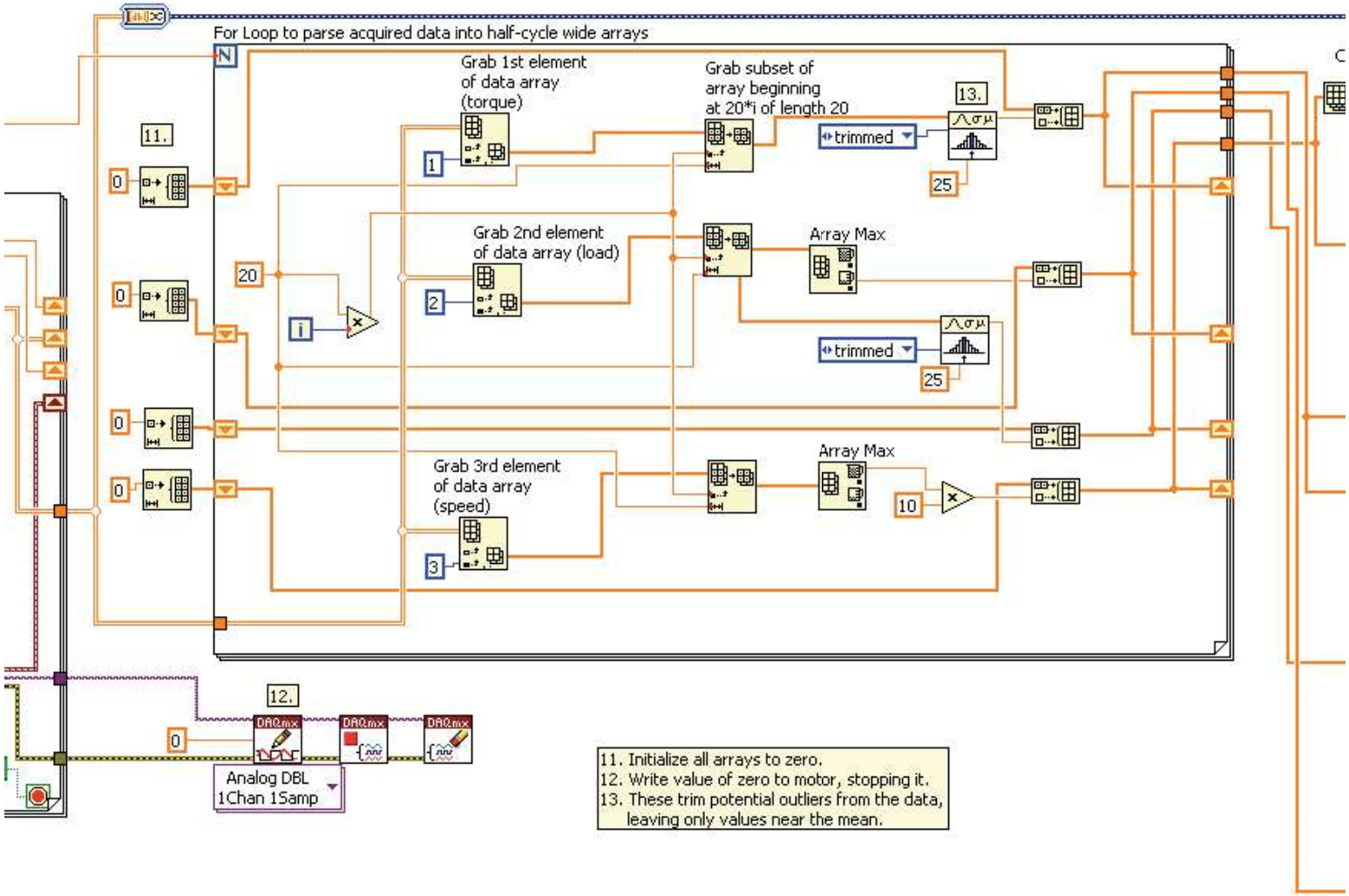

Copyright 2011, AHMCT Research Center, UC Davis

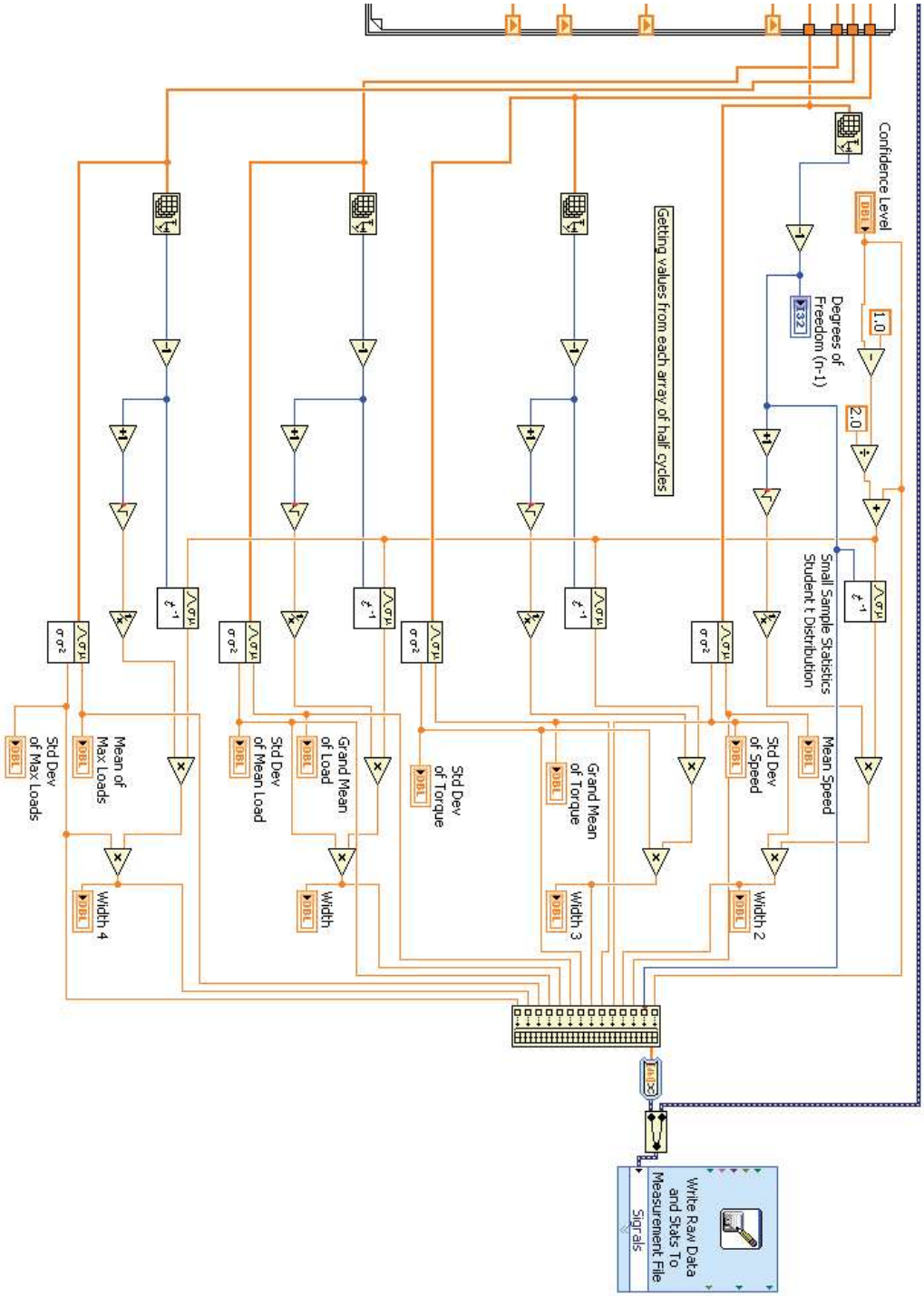

Copyright 2011, AHMCT Research Center, UC Davis

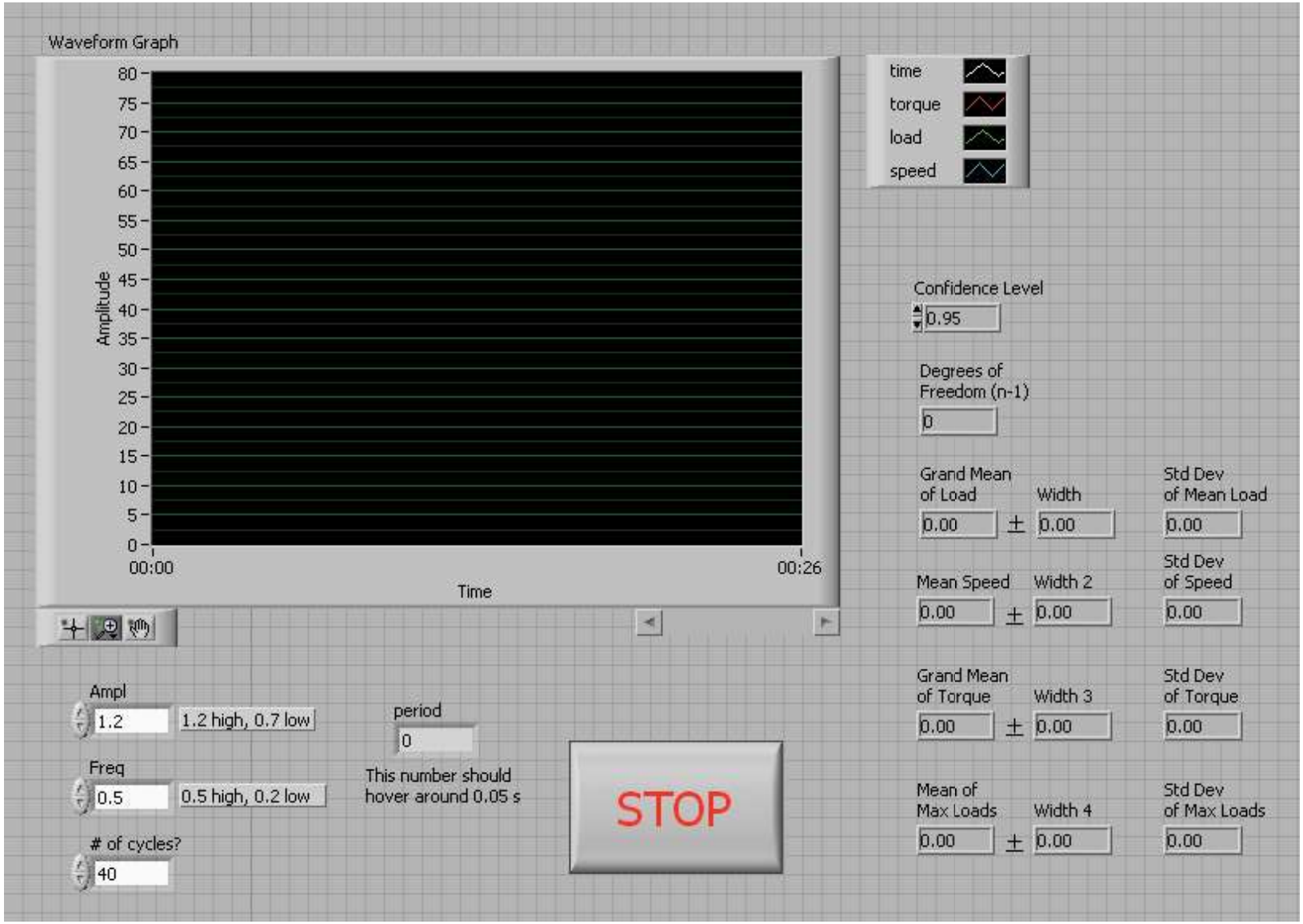

Copyright 2011, AHMCT Research Center, UC Davis

Appendix C: Sample Statistical Calculations

This appendix highlights the methods used to obtain the statistical results of the factorial experiment. These methods are taken from [34].

Effects

The effects are basically calculated by finding the difference between the two averages

$$\bar{y}_+ - \bar{y}_- \tag{C.1}$$

as follows: Given a column from the table of contrasts, e.g. column 12, the signs (+ - - + + - - + + - - + + - - +) are multiplied by the average values of the reduction in RA. This is then summed and divided by half the number of values, since half of the values are "positive" and half are "negative." The result is the effect.

Standard Error of Effects

The standard error of effects is a measure of the overall confidence interval for the data from the replicates of each run. It begins by estimating the variance at each *i*th set of conditions, by

$$s_i^2 = \frac{(\max - \min)^2}{2} \tag{C.2}$$

Then a pooled estimate of the experimental run variance from *g* factor combinations at *n* degrees of freedom for each replicate would be

$$s^2 = \frac{s_1^2 + s_2^2 + \ldots + s_g^2}{n} \tag{C.3}$$

Because each estimated effect is a difference between three averages of 16 observations, the variance of an effect is given as

$$V(\text{effect}) = \left(\frac{1}{16} + \frac{1}{16} + \frac{1}{16}\right) s^2 \tag{C.4}$$

Its square root is the standard error of an effect, SE(effect).

Copyright 2011, AHMCT Research Center, UC Davis

Vermeer Manufacturing Company – Ex. 2044
Kubota v. Vermeer
IPR2025-00169
Page 124 of 124