US 20160244937A1

(19) United States

(12) Patent Application Publication

Azure et al.

(10) Pub. No.: US 2016/0244937 A1

(43) Pub. Date: Aug. 25, 2016

(54) **UTILITY LOADER WITH HIGH LIFT LOADER ARMS AND UNIFYING HAND GRIP FOR DUAL TRACTION CONTROL LEVERS**

(71) Applicant: **The Toro Company**, Bloomington, MN (US)

(72) Inventors: **John P. Azure**, Bloomington, MN (US); **Joseph C. Knipp**, Elko, MN (US); **James A. Kuemper**, New Hope, MN (US); **David A. Murray**, Eagan, MN (US)

(21) Appl. No.: **15/047,061**

(22) Filed: **Feb. 18, 2016**

Related U.S. Application Data

(60) Provisional application No. 62/118,854, filed on Feb. 20, 2015.

Publication Classification

(51) **Int. Cl.**

E02F 3/34 (2006.01)

E02F 9/20 (2006.01)

(52) **U.S. Cl.**

CPC ***E02F 3/3414*** (2013.01); ***E02F 9/2004*** (2013.01)

(57) **ABSTRACT**

A compact utility loader is operated by a standing operator at the rear of a frame. A loader arm assembly comprises a scissors linkage on either side of the frame nesting around the prime mover. Each scissors linkage has an upper loader arm that is pivoted at its rear end to rears ends of a pair of lower loader arms such that the pivot connections to the upper loader arm move upwardly and forwardly relative to the frame during elevation of the loader arm assembly to provide a high lift capability. The frame is self-propelled by a differential drive and steering system that is operated by dual levers. A hand grip extends between and unifies the operation of the levers to permit the operator to more easily move the levers in the ways that are needed to provide either straight motion of the frame or turns of the frame.

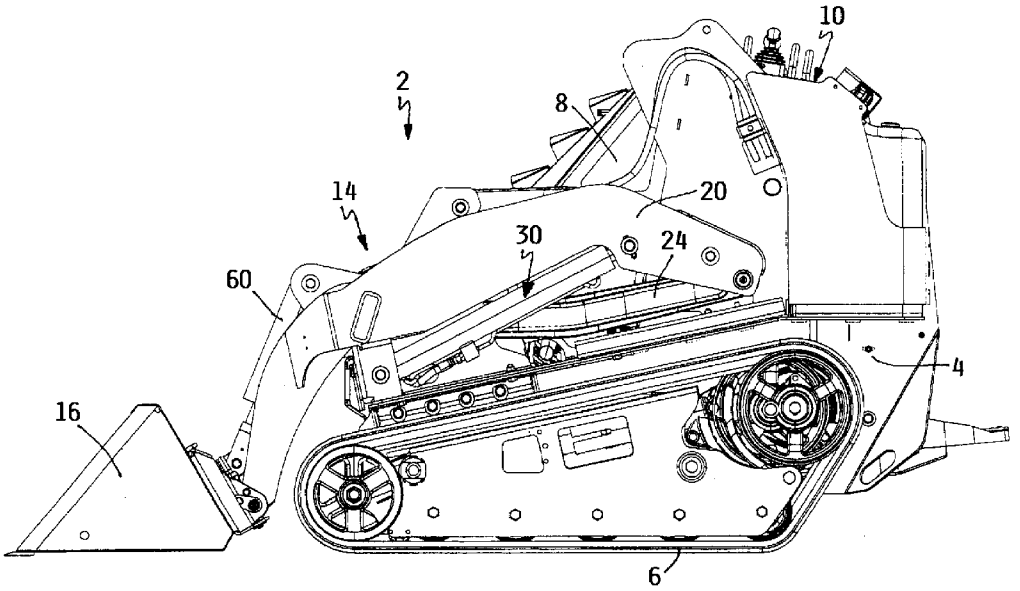

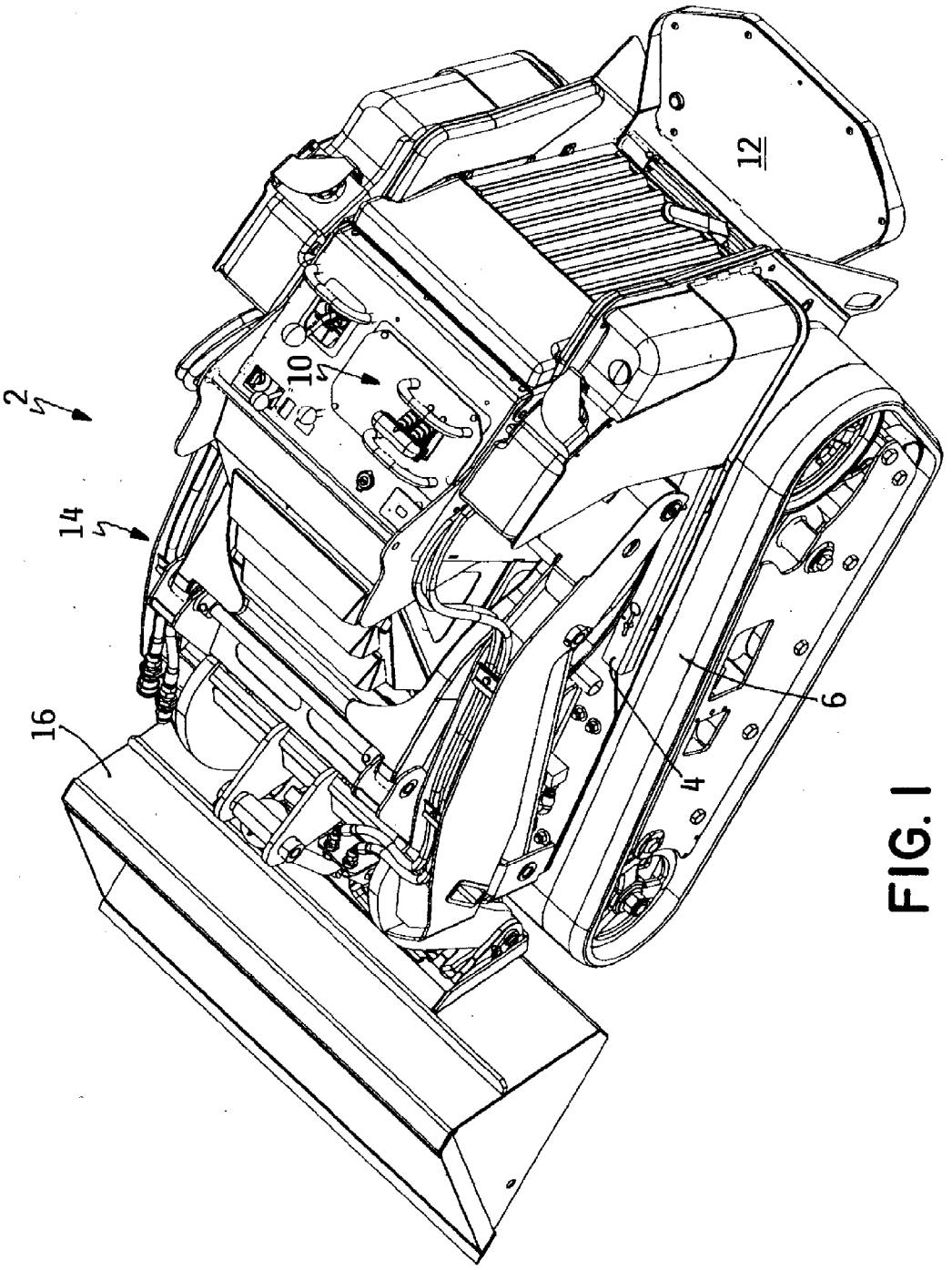

FIG. I

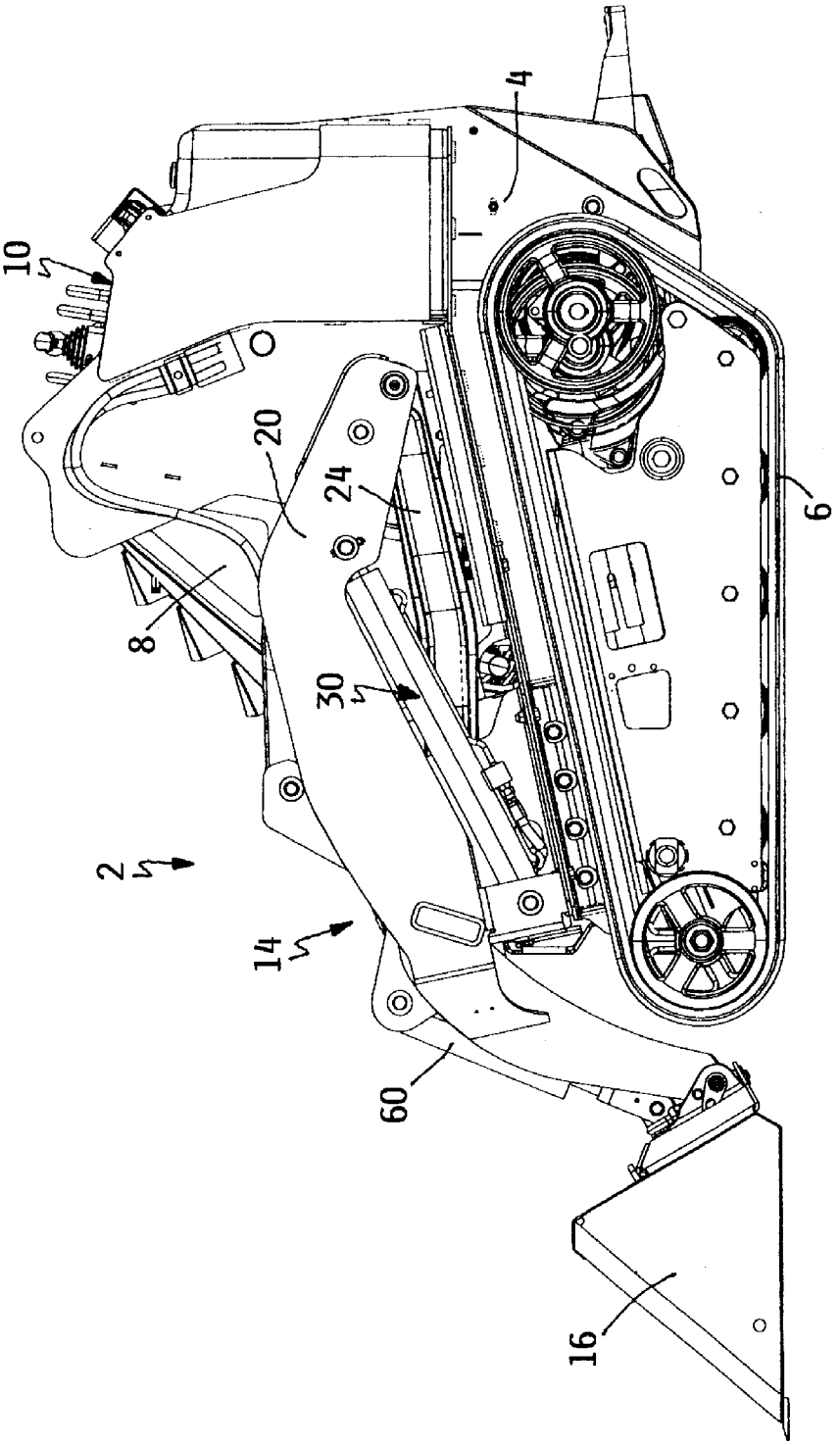

FIG. 2

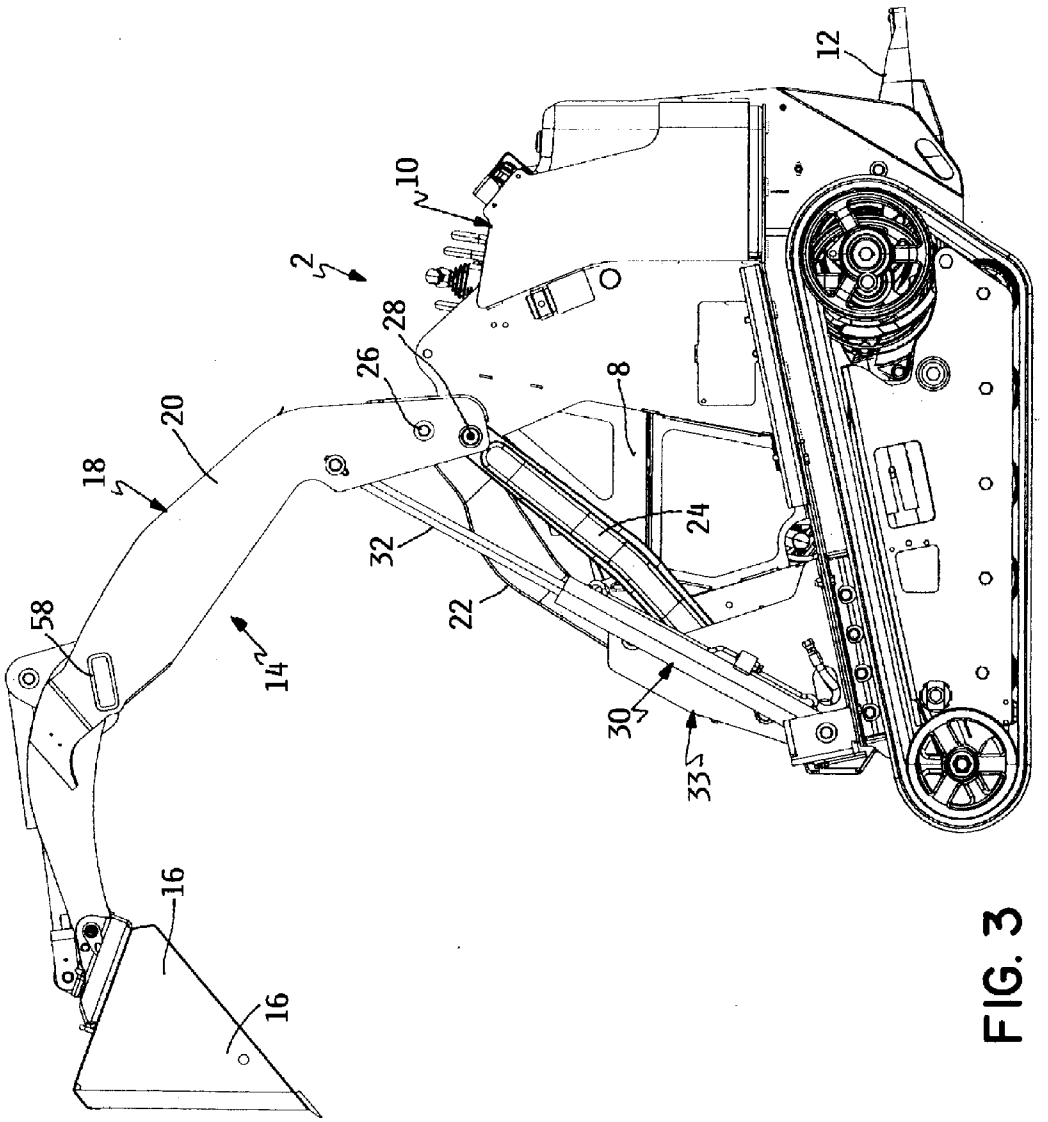

FIG. 3

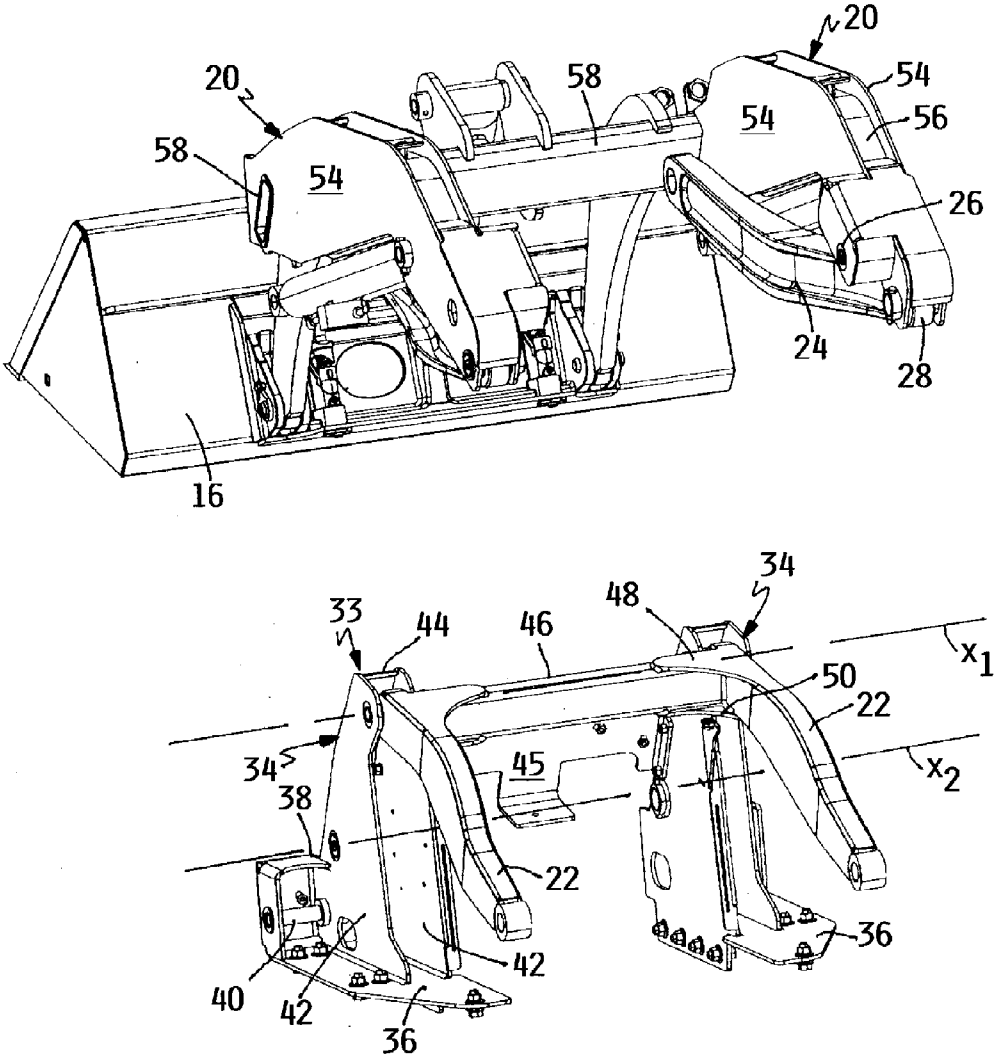
20
20
58
58
54
54
54
56
26
24
28
16
34
33
44
46
48
50
22
x_1
x_2
34
38
45
22
36
42
40
42
36

FIG. 4

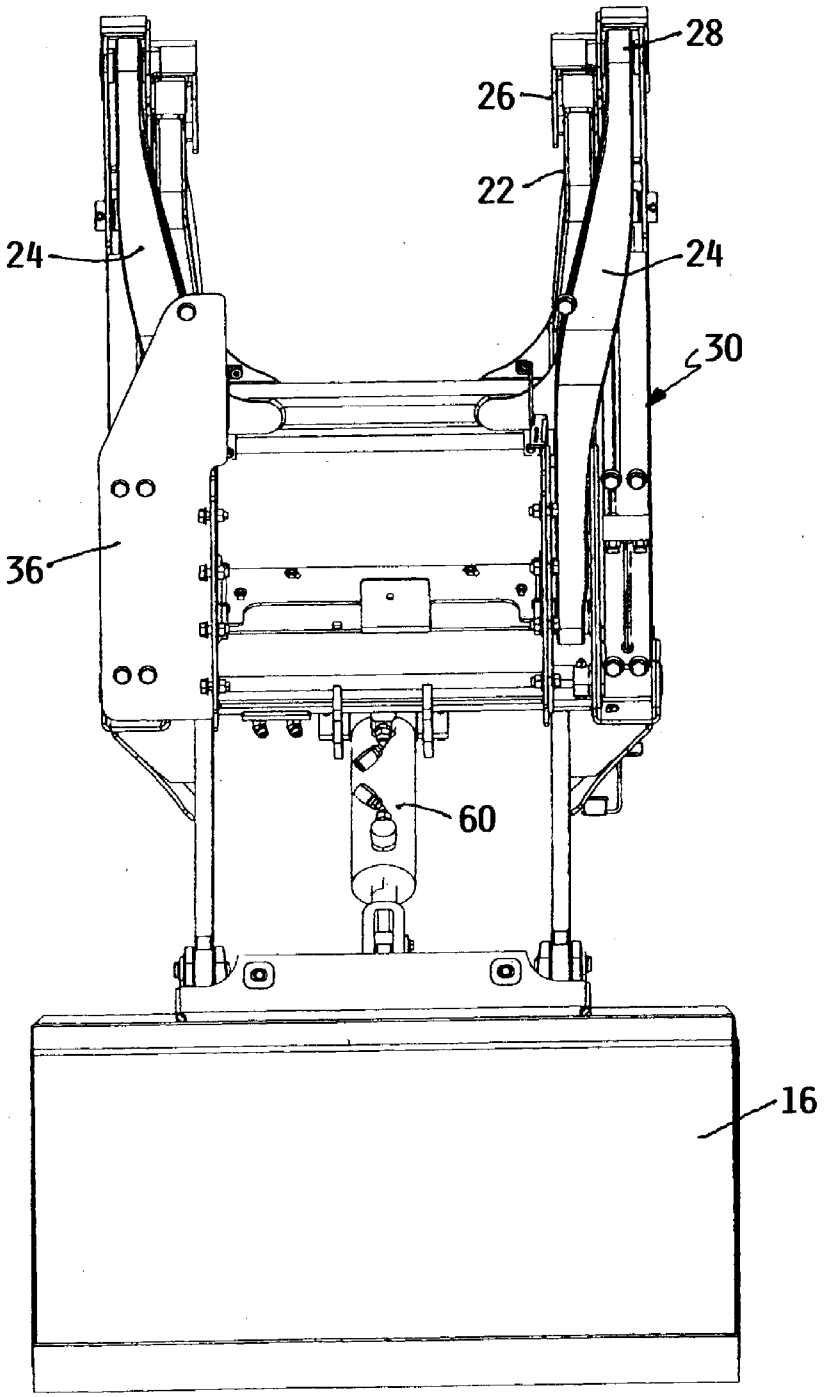

FIG. 5

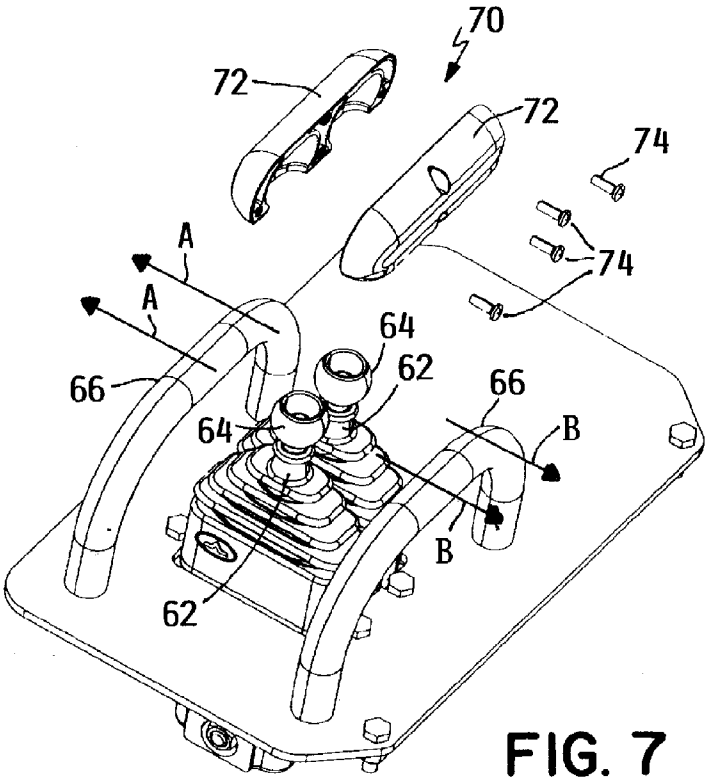

FIG. 7

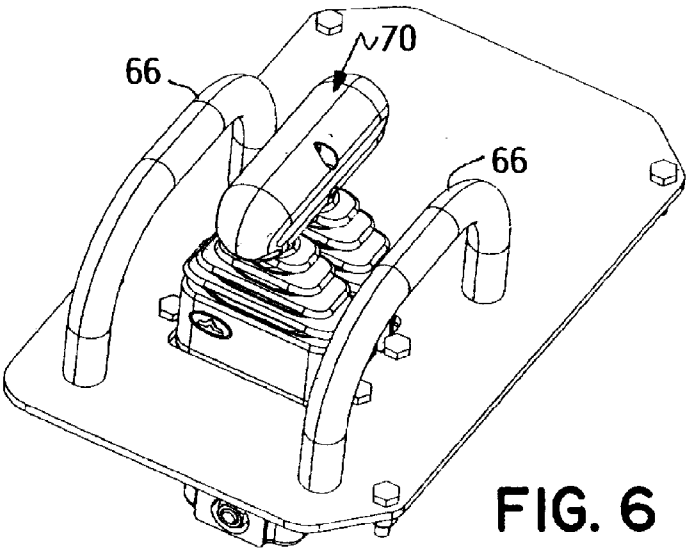

FIG. 6

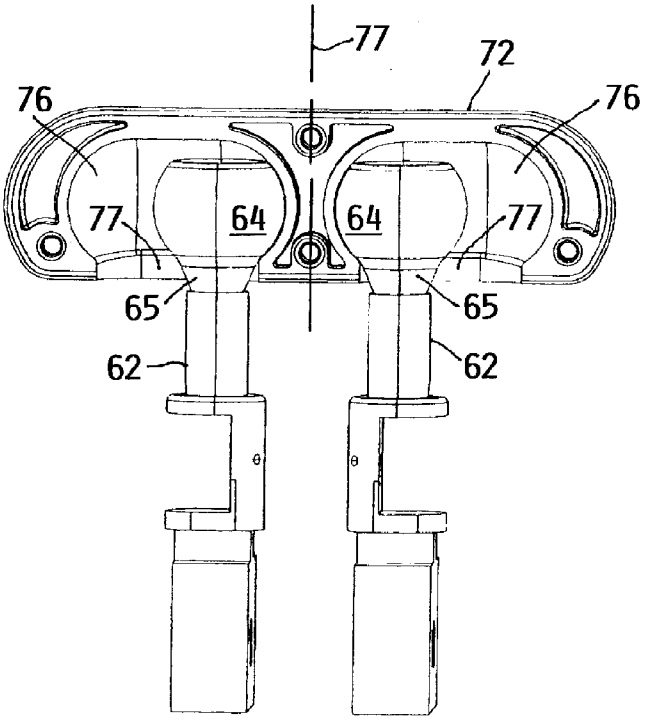

FIG. 8

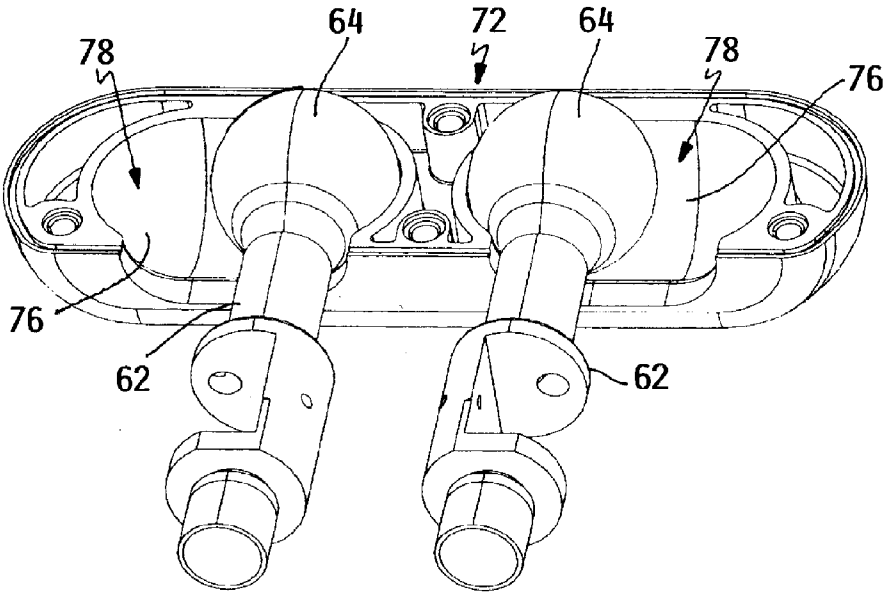

FIG. 9

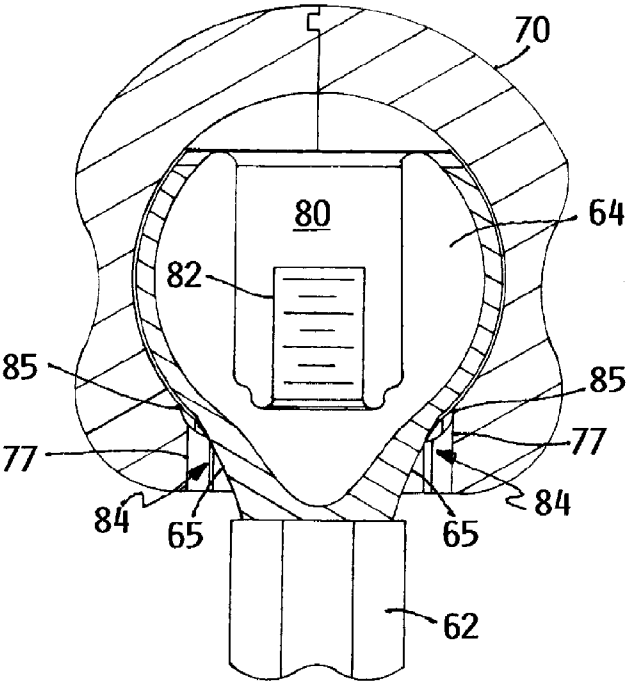

FIG. 10

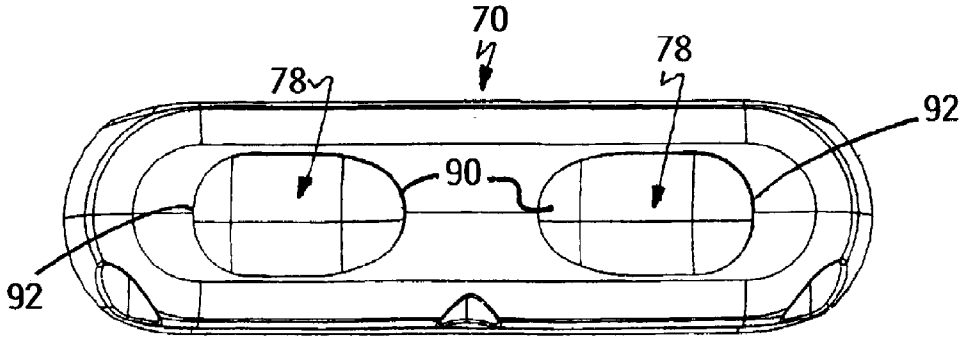

FIG. 11

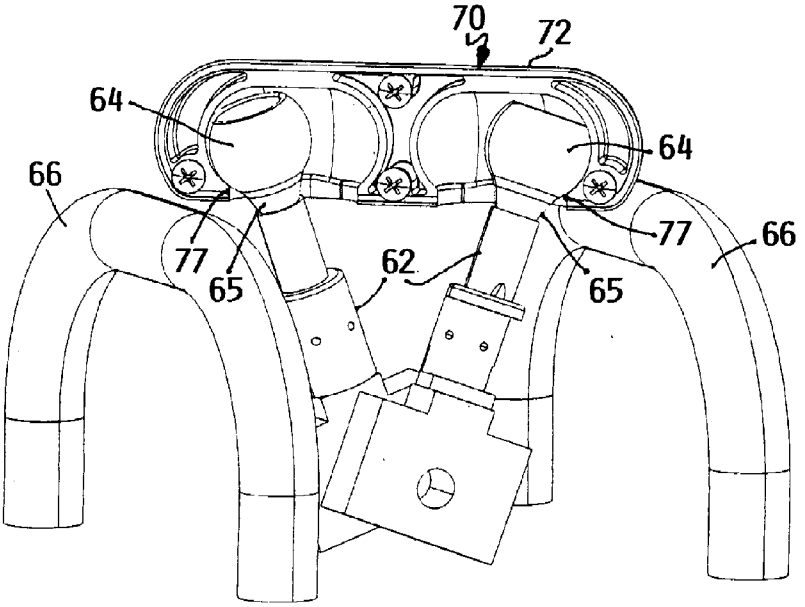

FIG. 12

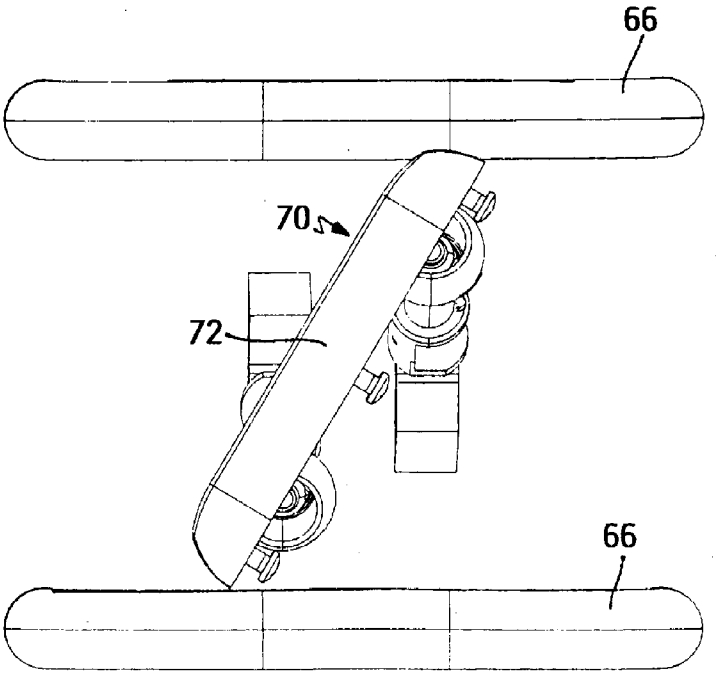

FIG. 13

UTILITY LOADER WITH HIGH LIFT LOADER ARMS AND UNIFYING HAND GRIP FOR DUAL TRACTION CONTROL LEVERS

TECHNICAL FIELD

[0001] This invention relates to a compact utility loader for performing various outdoor maintenance or working operations.

BACKGROUND OF THE INVENTION

[0002] Compact utility loaders are well known for performing various types of work in an outdoor environment. Such utility loaders perform work of the type often done by skid steer loaders, but are considerably smaller than skid steer loaders. Such compact utility loaders do not generally carry an operator in a seated position on the loader as do skid steer loaders. Instead, compact utility loaders most often are operated by an operator who walks on the ground behind the loader or, in some cases, who stands on a platform at the rear of the loader.

[0003] Compact utility loaders employ a differential or skid steer drive and steering system in which drive members on opposite sides of the loader, i.e. wheels or tracks, are driven at different speeds and/or opposite directions. When the drive members are driven at different speeds and in the same direction, the loader will execute a turn towards the side having the slowest drive member. When the drive members are driven at the same speed but in opposite directions, the loader will execute a very sharp spin or zero radius turn about a vertical axis located between the drive members. This is accomplished using independent traction drives, often individual hydrostatic drives, to independently power the drive members on the opposite sides of the loader.

[0004] Dual levers have long been used on compact utility loaders to independently control the traction drives on opposite sides of the loader. These traction control levers are pivotal in fore-and-aft directions from a neutral position in which the traction drives are unpowered and the loader is stationary. If the levers are equally pushed forwardly from neutral, then the loader will move forwardly in a straight line at a speed determined by how far the levers have been pushed ahead of the neutral position. If the levers are equally pulled rearwardly from neutral, then the loader will move rearwardly in a straight line at a speed determined by how far the levers have been pulled behind the neutral position. The levers are placed side-by-side on a compact utility loader to be capable of being operated by one hand of the operator since the other hand of the operator is often needed for operating other controls on the loader.

[0005] To make a left turn when traveling forwardly, the operator has to nudge or feather the right hand lever further away from neutral than the left hand lever whose position is either unchanged or is even moved back towards neutral by feathering both levers at the same time. This causes a left turn as the speed of the right hand traction drive is increased while the speed of the left hand traction drive either remains the same or is slowed. The controls are operated the same way to make a right hand except that it is the left hand lever that is moved further away from neutral than the right hand lever. The same differential movement between the traction control levers is also used to make turns when the loader is being propelled in reverse, i.e. the lever controlling the drive on the inside of the turn is moved back towards neutral or remains unchanged while the lever controlling the drive on the outside of the turn is moved further away from neutral.

[0006] The traction control levers on compact utility loaders are often topped by at least partially spherical balls or knobs such that they resemble joysticks. However, each such control lever only moves fore and aft along a single longitudinal axis of motion rather than along two orthogonal axes as would a true joystick. Even when the control levers are placed directly side by side such that the operator can rest a single hand on the dual knobs when operating the control levers, it is somewhat challenging for an operator to learn or master the art of nudging or feathering one control lever ahead of or behind the other lever to accomplish differential steering. This is particularly true given the uneven terrain on which a loader may be operating and the consequent jostling or rocking of the loader during operation. Accordingly, it would be an advance in the art to provide an operator with a better way of manipulating such dual lever traction controls on a compact utility loader.

[0007] Finally, the vertical reach of the loader arms on compact utility loaders is somewhat limited. While high lift loader arms are known on full size skid steer loaders as disclosed in U.S. Pat. No. 5,542,814, the use of such high lift loader arms on a compact utility loader has been considered difficult if not impossible due to size and durability constraints. Accordingly, it would be a further advance in the art to provide a way of safely and durably providing high lift loader arms on compact utility loaders to extend the vertical reach of such loaders. For example, this would allow a compact utility loader to dump debris or materials at higher elevations than previously, thus allowing the use of larger trucks to accept such debris or materials for transport.

SUMMARY OF THE INVENTION

[0008] One aspect of this invention relates to a compact utility loader which comprises a frame carrying a prime mover. Ground engaging members are provided on opposite sides of the frame with at least one ground engaging member on each side of the frame being powered to self-propel the frame. A control console is located at a rear end of the frame carrying controls that are manipulated to operate the loader by a standing operator. A loader arm assembly has a pair of scissor linkages on opposite sides of the frame outboard of the prime mover with the linkages nesting around the prime mover when the loader arm assembly is in a lowermost, fully retracted position. Each scissor linkage comprises an upper loader arm having a front end and a rear end and first and second lower loader arms with each lower loader arm also having a front end and a rear end. The front ends of the lower loader arms are pivotally connected to a front support assembly that is fixed to a front portion of the frame. The rear ends of the lower loader arms are pivotally connected by separate pivots to the rear end of the upper loader arm with the rear end of the upper loader arm being free to move upwardly and forwardly relative to the frame as the upper loader arm scissors away from the lower loader arms as the loader arm assembly is elevated between the lowermost, fully retracted position thereof and an uppermost, fully extended position. Finally, an outdoor work operation tool or implement is pivotally carried on the front ends of the upper loader arms ahead of a front end of the frame.

[0009] Another aspect of this invention relates to an outdoor work vehicle which comprises a frame having an outdoor maintenance or work implement carried on the frame. A

differential drive and steering system is carried on the frame, wherein the drive and steering system comprises independent traction drives on opposite sides of the frame. Dual levers are carried on the frame to independently control the traction drives on the opposite sides of the frame. The levers are equally pivoted in fore-and-aft directions from a neutral position to cause straight motion of the frame with the levers being unequally pivoted in fore-and-aft directions from the neutral position to cause turning motion of the frame. A hand grip extends between and unites the levers for causing conjoint motion of the levers through motion of the hand grip in the following manner. Motion of the hand grip along a fore-and-aft axis with the hand grip being perpendicular to the fore-and-aft axis results in the levers being equally pivoted to produce the straight motion of the frame. Motion of the hand grip along the fore-and-aft axis with the hand grip being cocked to one side of the fore-and-aft axis results in the levers being unequally pivoted to produce the turning motion of the frame towards the one side to which the hand grip is cocked.

BRIEF DESCRIPTION OF THE DRAWINGS

[0010] This invention will be described more specifically in the following Detailed Description, when taken in conjunction with the following drawings, in which like reference numerals refer to like elements throughout.

[0011] FIG. **1** is a perspective view of a compact utility loader according to this invention;

[0012] FIG. **2** is a side elevational view of the loader of FIG. **1**, particularly illustrating the high lift loader arms in their lowermost, fully retracted position;

[0013] FIG. **3** is a side elevational view similar to FIG. **2**, particularly illustrating the high lift loader arms in their uppermost, fully extended position;

[0014] FIG. **4** is an exploded perspective view of various portions of the high lift loader arm assembly of the loader of FIG. **1**;

[0015] FIG. **5** is a bottom plan view of the portions of the high lift loader arm assembly shown in FIG. **4**, particularly illustrating the loader arm assembly portions in an assembled condition with one mounting plate thereof having been removed for the purpose of clarity;

[0016] FIG. **6** is a perspective view of the traction control levers and the unifying hand grip portion of the loader of FIG. **1**, particularly illustrating the unifying hand grip in an assembled condition atop the traction control levers;

[0017] FIG. **7** is a perspective view similar to FIG. **6**, but showing the hand grip in an exploded and disassembled form relative to the traction control levers;

[0018] FIG. **8** is a side elevation view of one of the halves of the hand grip in engagement with the spherical balls or knobs of the traction control levers, particularly illustrating the slots on either side of the hand grip which receive the knobs of the traction control levers;

[0019] FIG. **9** is a perspective view of what is shown in FIG. **8**;

[0020] FIG. **10** is a cross-sectional side elevation view of the slot configuration in the hand grip as it is received on the knob of one of the traction control levers;

[0021] FIG. **11** is a bottom plan view of the hand grip showing the asymmetric shape of the laterally extending slots therein;

[0022] FIG. **12** is a perspective view of the hand grip being used to execute a spin or zero radius turn to the left with one half of the hand grip having been removed for the sake of clarity; and

[0023] FIG. **13** is a top plan view of the hand grip as depicted in FIG. **12**.

DETAILED DESCRIPTION

[0024] Referring first to FIGS. **1** and **2**, one embodiment of a compact utility loader according to this invention is illustrated generally as **2**. Loader **2** comprises a small chassis or frame **4** that mounts a pair of driven, ground engaging endless tracks **6** on opposite sides thereof. Tracks **6** may be replaced by pairs of driven ground engaging wheels on opposite sides of frame **4** if so desired.

[0025] Whether the ground engaging traction members of loader **2** are endless tracks or wheels, they are powered by a prime mover **8**, such as but not limited to an internal combustion gasoline or diesel engine, which is carried on frame **4**. Prime mover **8** is located substantially over a central portion of frame **4** immediately ahead of an operator's control console **10** located at the rear of frame **4**. Control console **10** is directly in front of a foot platform **12** that allows the operator to ride on loader **2** in a standing position at the rear of loader **2**. Alternatively, the foot platform **12** may be deleted from loader **2** if so desired in which case the operator would walk on the ground behind loader **2** rather than riding on loader **2**. In this alternative walk behind configuration control console **10** would be located at a convenient height relative to the ground to allow the controls to be easily reached by an operator who walks on the ground behind loader **2** rather than riding on an elevated foot platform. Loaders **2** of the general type shown herein are manufactured and sold by The Toro Company, in both wheeled and tracked versions as well as ride on and walk behind versions, under the Dingo® brand name.

[0026] Loader **2** has a loader arm assembly **14** that in a lowermost, fully retracted position nests around prime mover **8** as shown in FIG. **2**. A tool or implement for performing some type of outdoor maintenance or work operation is carried on the front end of loader **2** arm assembly in advance of frame **4** of loader **2**. In the embodiment of loader **2** shown herein, the implement comprises a pivotal dump bucket **16** for scooping up dirt, mulch or other materials and for then subsequently dumping the materials at another location, such as into a dump truck. Many other outdoor maintenance or work implements, such as trenchers, augers, chippers, fork lifts, etc., could be interchangeably used on the front end of loader arm assembly **14** in place of dump bucket **16**.

[0027] An aspect of this invention is the use of a high lift loader arm assembly that accommodates the small form of loader **2**. Referring now to FIG. **3**, loader arm assembly **14** comprises a pair of scissor shaped loader arm linkages **18** positioned on opposite sides of loader frame **4** directly outboard of prime mover **8**. Linkages **18** are identical to one another so a description of one linkage **18** will suffice to describe the other. FIG. **3** illustrates linkage **18** in the uppermost, fully extended, high lift position of loader arm assembly **14**. In this position, dump bucket **16** has been elevated a considerable distance above the ground.

[0028] As shown in FIG. **3**, each linkage **18** comprises an upper loader arm **20** and two lower loader arms **22**, **24** that are pivotally connected by pivots **26**, **28** to the rear portion of upper loader arm **20**. A hydraulic cylinder **30** has its piston rod

32 pivotally connected to upper loader arm **20** somewhat forwardly of pivots **26**, **28** for lower loader arms **22**, **24**. Hydraulic cylinder **30** is the actuator that lifts and lowers loader arm assembly **14** between its FIG. **2** and FIG. **3** positions and any desired position in between. Other actuators, such as electrical actuators, could be used in placed of hydraulic cylinders **30** used in linkages **18**.

[0029] Pivots **26**, **28** in each linkage **18** are not attached to loader frame **4**, but only serve to pivotally connect the two lower loader arms **22**, **24** to upper loader arm **20**. This permits the rear end of linkage **18** to elevate and move forwardly as loader arm assembly **14** is elevated by hydraulic cylinder **30**. Compare FIG. **2** to FIG. **3**. In FIG. **2**, loader arm pivots **26**, **28** are low and rearwardly located relative to loader frame **4**. In the high lift position of FIG. **3**, loader arm pivots **26**, **28** have significantly risen and moved somewhat more forwardly than the position they occupied in FIG. **2**. It is this ability of linkages **18** to elevate and move forwardly as upper loader arm **20** scissors away from lower loader arms **22**, **24** that provides the high lift function.

[0030] Loader arm assembly **14** of this invention has sufficient strength to provide high lift even when elevating a fully loaded dump bucket to significantly higher distances above the ground than is typical for a normal loader arm assembly. Referring now to FIG. **4**, loader arm assembly **14** includes a squat, robust support assembly **33** that is fixed to loader frame **4** generally at the front of frame **4** and which nests around the front of prime mover **8**. Support assembly **33** includes spaced left and right U-shaped support beams **34** that are fixed to loader frame **4** by mounting plates **36**. Each mounting plate **36** carries outboard of its support beam **34** an enclosed pocket **38** that is open towards the rear and carries a pivot pin **40** therein. Pivot pins **40** in pockets **38** pivotally journal the base ends of hydraulic cylinders **30** used for lifting and lowering linkages **18**.

[0031] Referring further to FIG. **4**, each support beam **34** comprises spaced side walls **42** connected together by a front wall **44** to provide strength. The rear ends of support beams **34** are open for receiving therebetween and pivotally mounting the front ends of the two lower loader arms **22**, **24**. Support beams **34** are united by a top cross rod **42** shown in FIG. **1** and by a partial front cross wall **45** shown in FIG. **4**. The ends of cross rod **42** extend into the interior of the tops of support beams **34** and pivotally journal the front ends of lower loader arms **22** for rotation about the horizontal axis x_1. The front ends of the other pair of lower loader arms **24** also extend into the interior of support beams **34** and are pivotally journalled therein for rotation about the horizontal axis x_2.

[0032] In addition to the strength provided by support assembly **33**, the lower loader **22** arms that pivot around axis x_1 comprises cast steel arms that are welded to a rectangular cross beam **46**. Top and bottom gussets **48** and **50** are further welded between the front ends of lower loader arms **22** and the tops and bottoms of cross beam **46** at each end thereof. This provides very high strength to the pair of lower loader arms **22** particularly given the mounting of lower loader arms **22** inside the U-shaped support beams **34** of support assembly **33**. Moreover, the other pair of lower loader arms **24** also comprises cast steel arms and also pivotally mounts inside the U-shaped support beams **34** of support assembly **33** to pivot around axis x_2 in FIG. **4**. Note that the other pair of lower loader arms **24** is not shown connected in FIG. **4** to support assembly **33**, but have bores **52** at the front ends thereof that would be pivotally journalled on pivot pins (not shown) provided in support beams **34** on axis x_2.

[0033] Looking at the exploded portion of loader arm assembly **14** that is shown in FIG. **4** above the fixed support assembly **33**, it can be seen that upper loader arms **20** also have a box-shaped beam configuration formed by side walls **54** connected together by a top wall **56**. The bottom of each upper loader arm **20** is open to receive therein the end of piston rod **32** and the rear ends of lower loader arms **22**, **24** for pivotal attachment thereto. The strength of upper loader arms **20** is increased by a rectangular box beam **58** of substantial size that connects upper loader arms **20** towards the front thereof. This box beam also serves to mount a hydraulic cylinder **60** that pivots dump bucket **16** at the front of upper loader arms **20**.

[0034] Together, the configuration of support assembly **33**, the configuration of the pairs of lower loader arms **22**, **24** and how they are pivotally journalled at their front ends inside the U-shaped support beams **34** of support assembly **33** and at their rear ends inside the U-shaped upper loader arms **20**, and the box shaped beam configuration used to form upper loader arms **20** along with box beam **58** that unites such loader arms **20**, provide a loader arm assembly **14** having sufficient strength and durability to withstand the loads and stresses involved in high lift operations of heavy loads. This is all accomplished in a loader arm assembly **14** that neatly and compactly nests around prime mover **8** in its lowermost, fully retracted position shown in FIG. **2**. In this regard, hydraulic cylinders **30** extend straight rearwardly as they connect between the side pockets **38** of support assembly **33** and the undersides of upper loader arms **20**. To avoid hitting or interfering with such hydraulic cylinders **30**, the lower of the two pairs of lower loader arms, namely loader arms **24** that pivot about the axis x_2, are curved to the side to miss hydraulic cylinders **30** as best shown in FIG. **5**. Thus, loader arm assembly **14** is well adapted to the loads it must carry during high lift operations while being tailored to the small form of a compact utility loader **2**. In addition, high lift loader arm assembly **14** maintains the forward reach of the loader arms **20** and dump bucket **16** carried thereon far better than radial loader arms which move somewhat rearwardly as they rise.

[0035] Turning now to FIGS. **6-13**, another aspect of this invention relates to the traction control levers **62** that cause differential and spin steering of the traction drive of loader **2**. As is well known in skid steer and compact utility loaders, individual drives, such as but not limited to hydrostatic drives, are provided on each side of loader **2** to effect both propulsion and steering of loader **2**. This is done by differentially actuating the drives to each side of loader **2**, namely causing one drive to rotate faster than the other, to create turns to the side of the slowest drive. Spin or zero radius turns are accomplished by causing one drive to rotate forwardly at a given speed while causing the other drive to rotate rearwardly at approximately the same speed. As noted above, such differential drives are in themselves well known for use on compact utility loaders.

[0036] As best seen in FIG. **7**, known differential drives are often controlled by the operator by using side-by-side control levers **62** that may be operated along fore and aft axes to be pushed forwardly out of neutral or pulled rearwardly out of neutral. Levers **62** often have a partially spherical ball or knob **64** on the top thereof. Levers **62** are shown in neutral in FIG. **7**. When they are pushed forwardly as indicated by the arrows A in FIG. **7**, loader **2** is propelled forwardly. When they are

pulled rearwardly as indicated by the arrows B in FIG. **7**, loader **2** is propelled in reverse. If levers **62** are advanced or retarded unequally as they are pushed forwardly or pulled rearwardly, this differential action between levers **62** causes turns to one side. The operator normally rests one hand on such levers **62** when driving loader **2** and uses the fingers of his or her hand to feather one lever **62** more forward or rearward of the other lever **62** when turning. Grab bars **66** are provided in front of and in back of levers **62** for allowing the user to rest portions of his or her hand or fingers on grab bars **66** when operating levers **62**.

[0037] This invention further provides a unifying hand grip **70** that sits atop levers **62** and effectively unites levers **62** when hand grip **70** is installed. As shown in FIG. **7**, hand grip **70** is provided in two halves **72** that may be separated from one another for installation of hand grip **70**. Various threaded screws **74** are provided for allowing halves **72** to be joined to another. When halves **72** are installed around the front and rear sides of knobs **64** of levers **62** such that the parting lines of halves **72** are abutted with one another, screws **74** may be installed and tightened to finish the installation of hand grip **70** atop levers **62**. The installed hand grip **70** is shown in FIG. **6**.

[0038] Referring now to FIGS. **8** and **9**, halves **72** define two laterally extending slot halves **76** on either side of the centerline **77** of hand grip **70**. When halves **72** are united together, slot halves **76** form laterally extending slots **78** on either side of hand grip centerline **77**. The front and rear sides of slots **78** are curved to mate with the spherical curvature of the front and rear sides of knobs **64** of levers **62**. Once assembled, knobs **64** of levers **62** are received in slots **78** but cannot be pulled downwardly out of slots **78** as the spherical shapes of knobs **64** are larger than the bottom openings of slots **78** through which the very lowermost portions of knobs **64** extend. Thus, once halves **72** are assembled around knobs **64** of levers **62**, hand grip **70** formed thereby cannot be removed from knobs **64** except by disassembling the same into halves **72** thereof.

[0039] As shown in FIG. **10**, the top of each knob **64** is cut away or truncated to expose a hollow central cavity **80** of knob **64** to allow knob **64** to be attached to a threaded upper end **82** of its corresponding lever **62**. A nut (not shown) is received on threaded upper end **82** and screwed downwardly to secure knob **64** to lever **62**. Preferably, the nut bottoms out in cavity **80** at a point at which knob **64** has no substantial vertical movement relative to lever **62** but before knob **64** is immovably or completely clamped or tightened to lever **62**. Some degree of relative rotation or spinning of knob **64** atop lever **62** is preferred since such relative rotary motion has been found to reduce friction and wear as knob **64** traverses the length of slot **78** in which it is received with the caveat that knob **64** should not be so loose atop lever **62** that it moves up and down in any significant fashion on lever **62**. While such relative rotary motion is preferred, knob **64** could be made fast with lever **62** so as to preclude such relative rotary motion if so desired.

[0040] In addition as further shown both in FIG. **8** and FIG. **10**, while most of the surface of knob **64** is spherical in shape, the lower portion of knob **64** has a conical collar **65** leading to its bottom surface. This conical collar **65** is opposed by an approximately vertical wall **77** at the bottom of the front and rear sides of slot **78** which wall **77** is located below and cuts off the curved front and rear sides of slot **78** which match to the spherical portion of knob **64**. Thus, a triangular gap **84** is located between the front and rear sides of slot **78** at the bottom thereof and the front and rear sides of conical collar **65**. This triangular gap **84** has an apex **85** that forms a relatively sharp break or line of contact between conical collar **65** and walls **77** that ensures that hand grip **70** will not rock back and forth atop knobs **64** when it is pushed straight forwardly or pulled back straight rearwardly for straight line forward or reverse travel. This helps hand grip **70** remain stable and firm atop knobs **64** without having a tendency to itself rotate around the spherical surfaces of knobs **64**.

[0041] Hand grip **70** eases the task of manipulating levers **62**. To go forwardly, the operator simply pushes forwardly on hand grip **70**. To go rearwardly, the operator simply pulls back on hand grip **70**. To steer to the left when traveling forwardly, the operator simply rotates or cocks his or her hand to the left to cause the right side of hand grip **70** to move forwardly and the left side of hand grip **70** to move rearwardly. This automatically creates the proper differential action between levers **62** to cause a left turn. Slots **78** in hand grip **70** permit hand grip **70** to slide and pivot as need be around knobs **64** of levers **62** to accommodate this hand grip twisting or cocking to one side or the other. Put another way, since levers **62** and their knobs **64** can only move fore and aft in straight lines, slots **78** are needed to effectively allow hand grip **70** to have lateral motion relative to knobs **64** when hand grip **70** is being used to execute turns.

[0042] FIGS. **12** and **13** show hand grip **70** being used to execute a spin or zero radius turn towards the left. Hand grip **70** will have moved from the position shown in FIG. **9** where knobs **64** are located on the inner ends of slots **78** in each side of hand grip **70** to the positions shown in FIGS. **12** and **13** where knobs **64** will have moved to the outer ends of slots **78**. Note in FIG. **12** that the same conical collar **65** and vertical wall **77** is used at the outer ends of slots **78** to allow knobs **64** to move into the outer ends of slots **78** without levers **62** being obstructed or hitting the outer ends of slots **78**. As shown in FIG. **11**, Applicants have found it useful to shape each slot **78** in an egg-shaped form where the inner end **90** of each slot **78** is somewhat smaller than the outer end **92** of each slot. The increase in size in outer end **92** of each slot **78** permits knobs **64** to more easily move the entire length of the slots when doing spin or zero radius turns without binding.

[0043] Using a hand grip **70** of the type shown in FIGS. **6-9** is far easier than trying to control both traction control levers with the fingers of the user's hand. Accordingly, hand grip **70** significantly increases the ease by which the operator is able to control the traction drive system of loader **2**. This in turn increases safety and makes it less likely for the operator to have imprecise turns or to lose any steering control.

[0044] Various modifications of this invention will be apparent to those skilled in the art. For example, unifying hand grip **70** would be useful on outdoor work vehicles other than compact utility loaders as long as such work vehicles have a differential drive and steering system operated by dual traction control levers. Accordingly, the scope of this invention is to be limited only by the appended claims.

1. A compact utility loader, which comprises:

(a) a frame carrying a prime mover;

(b) ground engaging members on opposite sides of the frame with at least one ground engaging member on each side of the frame being powered to self-propel the frame;

(c) a control console at a rear end of the frame carrying controls that are manipulated to operate the loader by a standing operator;

(d) a loader arm assembly having a pair of scissor linkages on opposite sides of the frame outboard of the prime mover with the linkages nesting around the prime mover when the loader arm assembly is in a lowermost, fully retracted position, wherein each scissor linkage comprises:

(i) an upper loader arm having a front end and a rear end; and

(ii) first and second lower loader arms, wherein each lower loader arm has a front end and a rear end, wherein the front ends of the lower loader arms are pivotally connected to a front support assembly that is fixed to a front portion of the frame, and wherein the rear ends of the lower loader arms are pivotally connected by separate pivots to the rear end of the upper loader arm with the rear end of the upper loader arm being free to move upwardly and forwardly relative to the frame as the upper loader arm scissors away from the lower loader arms as the loader arm assembly is elevated between the lowermost, fully retracted position thereof and an uppermost, fully extended position; and

(e) an outdoor work operation tool or implement pivotally carried on the front ends of the upper loader arms ahead of a front end of the frame.

2. The loader of claim **1**, wherein the front support assembly comprises laterally spaced support beams, wherein each support beam extends vertically upwardly relative to the frame and has a U-shaped cross-section with an open side, wherein the open side of the U-shaped cross-section of each support beam faces rearwardly, and wherein the front ends of the lower loader arms of each scissors linkage extend into and are pivotally journalled within the U-shaped cross- section of a different one of the support beams to pivotally couple the loader arm assembly to the frame.

3. The loader of claim **2**, wherein the support beams have interior side walls that are further joined together by at least a partial front wall extending laterally between and joining the support beams.

4. The loader of claim **2**, wherein the lower loader arms of each scissors linkage comprise cast steel arms.

5. The loader of claim **2**, wherein top ones of the lower loader arms are welded to a rectangular cross beam that extends laterally between and further joins the top ones of the lower loader arms to each other.

6. The loader of claim **2**, wherein the support beams have exterior side walls that mount an outwardly extending pivot pin that is located outside of the U-shaped cross-sections of the side walls, the pivot pin pivotally mounting one end of an actuator that is part of each scissors linkage with the actuator extending rearwardly from the pivot pin to an opposite end that is pivotally journalled on the upper loader arm ahead of the pivots that journal the lower loader arms to the upper loader arm.

7. The loader of claim **6**, wherein the pivot pins are located within substantially enclosed pockets extending laterally from the exterior side walls of the support beams with the pockets being open only at a rear side thereof.

8. The loader of claim **6**, wherein the actuators extend substantially straight rearwardly as the actuators extend between the support beams of the front support assembly and the upper loader arms of the scissors linkages, and wherein bottom ones of the lower loader arms of the scissors linkages have portions that curve inwardly to avoid hitting or interfering with the actuators.

9. The loader of claim **1**, further including a rear foot platform on the frame for permitting the standing operator to stand on the frame during operation of the loader.

10. An outdoor work vehicle, which comprises:

(a) a frame;

(b) an outdoor maintenance or work implement carried on the frame;

(c) a differential drive and steering system carried on the frame, wherein the drive and steering system comprises independent traction drives on opposite sides of the frame;

(d) dual levers carried on the frame to independently control the traction drives on the opposite sides of the frame, the levers being equally pivoted in fore-and-aft directions from a neutral position to cause straight motion of the frame, the levers being unequally pivoted in fore-and-aft directions from the neutral position to cause turning motion of the frame; and

(e) a hand grip extending between and uniting the levers for causing conjoint motion of the levers through motion of the hand grip in the following manner:

(i) motion of the hand grip along a fore-and-aft axis with the hand grip being perpendicular to the fore-and-aft axis resulting in the levers being equally pivoted to produce the straight motion of the frame; and

(ii) motion of the hand grip along the fore-and-aft axis with the hand grip being cocked to one side of the fore-and-aft axis resulting in the levers being unequally pivoted to produce the turning motion of the frame towards the one side to which the hand grip is cocked.

11. The work vehicle of claim **10**, wherein the levers have upper ends, and wherein the hand grip when uniting the levers is coupled to the upper ends of the levers.

12. The work vehicle of claim **11**, wherein the hand grip when uniting the levers overlies and covers the upper ends of the levers.

13. The work vehicle of claim **11**, wherein the hand grip when uniting the levers is laterally movable relative to the upper ends of the levers to allow the hand grip to be cocked to one side to initiate a turn.

14. The work vehicle of claim **11**, wherein the hand grip has a pair of laterally extending slots that are laterally spaced apart from one another on either side of a centerline of the hand grip, wherein the upper end of one lever is received within one hand grip slot and the upper end of the other lever is received within the other hand grip slot, the slots permitting the hand grip to have lateral motion relative to the upper ends of the levers to allow the hand grip to be cocked to one side to initiate a turn.

15. The work vehicle of claim **14**, wherein the upper ends of the levers comprise generally spherical knobs, and wherein the slots are curved to mate with the spherical knobs.

16. The work vehicle of claim **15**, wherein the knob of each lever is separate from the lever to which it is attached, and wherein each knob is rotatably carried on the lever to which it is attached such that the lateral motion of the slot in which the

knob is received induces the knob to rotate on the lever to which is attached to thereby decrease friction between the knob and the slot.

17. The work vehicle of claim **10**, wherein the work vehicle comprises a compact utility loader.

* * * * *