UNITED STATES PATENT AND TRADEMARK OFFICE

UNITED STATES DEPARTMENT OF COMMERCE
United States Patent and Trademark Office
Address: COMMISSIONER FOR PATENTS
P.O. Box 1450
Alexandria, Virginia 22313-1450
www.uspto.gov

APPLICATION NO.	ISSUE DATE	PATENT NO.	ATTORNEY DOCKET NO.	CONFIRMATION NO.
14/691,649	04/26/2016	9321386	31681-31	7913

76656 7590 04/06/2016
Patent Docket Department
Armstrong Teasdale LLP
7700 Forsyth Boulevard
Suite 1800
St. Louis, MO 63105

ISSUE NOTIFICATION

The projected patent number and issue date are specified above.

Determination of Patent Term Adjustment under 35 U.S.C. 154 (b)
(application filed on or after May 29, 2000)

The Patent Term Adjustment is 0 day(s). Any patent to issue from the above-identified application will include an indication of the adjustment on the front page.

If a Continued Prosecution Application (CPA) was filed in the above-identified application, the filing date that determines Patent Term Adjustment is the filing date of the most recent CPA.

Applicant will be able to obtain more detailed information by accessing the Patent Application Information Retrieval (PAIR) WEB site (http://pair.uspto.gov).

Any questions regarding the Patent Term Extension or Adjustment determination should be directed to the Office of Patent Legal Administration at (571)-272-7702. Questions relating to issue and publication fee payments should be directed to the Application Assistance Unit (AAU) of the Office of Data Management (ODM) at (571)-272-4200.

APPLICANT(s) (Please see PAIR WEB site http://pair.uspto.gov for additional applicants):

Brad Thomas, Pleasant Hill, IA;
Vermeer Manufacturing Company, Pella, IA
Louis Hartke, Pella, IA;
Greg Langenfeld, Bettendorf, IA;
Matt Hutchinson, Pella, IA;

The United States represents the largest, most dynamic marketplace in the world and is an unparalleled location for business investment, innovation, and commercialization of new technologies. The USA offers tremendous resources and advantages for those who invest and manufacture goods here. Through SelectUSA, our nation works to encourage and facilitate business investment. To learn more about why the USA is the best country in the world to develop technology, manufacture products, and grow your business, visit SelectUSA.gov.

IR103 (Rev. 10/09)

PART B - FEE(S) TRANSMITTAL

Complete and send this form, together with applicable fee(s), to: Mail **Mail Stop ISSUE FEE**
Commissioner for Patents
P.O. Box 1450
Alexandria, Virginia 22313-1450
or Fax (571)-273-2885

INSTRUCTIONS: This form should be used for transmitting the ISSUE FEE and PUBLICATION FEE (if required). Blocks 1 through 5 should be completed where appropriate. All further correspondence including the Patent, advance orders and notification of maintenance fees will be mailed to the current correspondence address as indicated unless corrected below or directed otherwise in Block 1, by (a) specifying a new correspondence address; and/or (b) indicating a separate "FEE ADDRESS" for maintenance fee notifications.

CURRENT CORRESPONDENCE ADDRESS (Note: Use Block 1 for any change of address)

76656 7590 02/17/2016
Patent Docket Department
Armstrong Teasdale LLP
7700 Forsyth Boulevard
Suite 1800
St. Louis, MO 63105

Note: A certificate of mailing can only be used for domestic mailings of the Fee(s) Transmittal. This certificate cannot be used for any other accompanying papers. Each additional paper, such as an assignment or formal drawing, must have its own certificate of mailing or transmission.

Certificate of Mailing or Transmission
I hereby certify that this Fee(s) Transmittal is being deposited with the United States Postal Service with sufficient postage for first class mail in an envelope addressed to the Mail Stop ISSUE FEE address above, or being facsimile transmitted to the USPTO (571) 273-2885, on the date indicated below.

(Depositor's name)
(Signature)
(Date)

APPLICATION NO.	FILING DATE	FIRST NAMED INVENTOR	ATTORNEY DOCKET NO.	CONFIRMATION NO.
14/691,649	04/21/2015	Brad Thomas	31681-31	7913

TITLE OF INVENTION: LOW PROFILE COMPACT TOOL CARRIERS

APPLN. TYPE	ENTITY STATUS	ISSUE FEE DUE	PUBLICATION FEE DUE	PREV. PAID ISSUE FEE	TOTAL FEE(S) DUE	DATE DUE
nonprovisional	UNDISCOUNTED	$960	$0	$0	$960	05/17/2016

EXAMINER	ART UNIT	CLASS-SUBCLASS
KRAMER, DEAN J	3652	414-722000

1. Change of correspondence address or indication of "Fee Address" (37 CFR 1.363).
- ☐ Change of correspondence address (or Change of Correspondence Address form PTO/SB/122) attached.
- ☐ "Fee Address" indication (or "Fee Address" Indication form PTO/SB/47; Rev 03-02 or more recent) attached. **Use of a Customer Number is required.**

2. For printing on the patent front page, list
(1) The names of up to 3 registered patent attorneys or agents OR, alternatively,
(2) The name of a single firm (having as a member a registered attorney or agent) and the names of up to 2 registered patent attorneys or agents. If no name is listed, no name will be printed.

1 Armstrong Teasdale LLP
2
3

3. ASSIGNEE NAME AND RESIDENCE DATA TO BE PRINTED ON THE PATENT (print or type)

PLEASE NOTE: Unless an assignee is identified below, no assignee data will appear on the patent. If an assignee is identified below, the document has been filed for recordation as set forth in 37 CFR 3.11. Completion of this form is NOT a substitute for filing an assignment.

(A) NAME OF ASSIGNEE: Vermeer Manufacturing Company
(B) RESIDENCE: (CITY and STATE OR COUNTRY): Pella, Iowa

Please check the appropriate assignee category or categories (will not be printed on the patent) : ☐ Individual ☑ Corporation or other private group entity ☐ Government

4a. The following fee(s) are submitted:
- ☑ Issue Fee
- ☐ Publication Fee (No small entity discount permitted)
- ☐ Advance Order - # of Copies _____

4b. Payment of Fee(s): (**Please first reapply any previously paid issue fee shown above**)
- ☐ A check is enclosed.
- ☐ Payment by credit card. Form PTO-2038 is attached.
- ☑ The director is hereby authorized to charge the required fee(s), any deficiency, or credits any overpayment, to Deposit Account Number 012384 (enclose an extra copy of this form).

5. **Change in Entity Status** (from status indicated above)
- ☐ Applicant certifying micro entity status. See 37 CFR 1.29 — NOTE: Absent a valid certification of Micro Entity Status (see forms PTO/SB/15A and 15B), issue fee payment in the micro entity amount will not be accepted at the risk of application abandonment.
- ☐ Applicant asserting small entity status. See 37 CFR 1.27 — NOTE: If the application was previously under micro entity status, checking this box will be taken to be a notification of loss of entitlement to micro entity status.
- ☐ Applicant changing to regular undiscounted fee status. — NOTE: Checking this box will be taken to be a notification of loss of entitlement to small or micro entity status, as applicable.

NOTE: This form must be signed in accordance with 37 CFR 1.31 and 1.33. See 37 CFR 1.4 for signature requirements and certifications.

Authorized Signature /Michael J. Vander Molen/ Date 3/22/2016

Typed or printed name Michael J. Vander Molen Registration No. 57,274

PTOL-85 Part B (10-13) Approved for use through 10/31/2013. OMB 0651-0033 U.S. Patent and Trademark Office; U.S. DEPARTMENT OF COMMERCE

UNITED STATES PATENT AND TRADEMARK OFFICE

UNITED STATES DEPARTMENT OF COMMERCE
United States Patent and Trademark Office
Address: COMMISSIONER FOR PATENTS
P.O. Box 1450
Alexandria, Virginia 22313-1450
www.uspto.gov

NOTICE OF ALLOWANCE AND FEE(S) DUE

76656 7590 02/17/2016
Patent Docket Department
Armstrong Teasdale LLP
7700 Forsyth Boulevard
Suite 1800
St. Louis, MO 63105

EXAMINER
KRAMER, DEAN J

ART UNIT	PAPER NUMBER
3652	

DATE MAILED: 02/17/2016

APPLICATION NO.	FILING DATE	FIRST NAMED INVENTOR	ATTORNEY DOCKET NO.	CONFIRMATION NO.
14/691,649	04/21/2015	Brad Thomas	31681-31	7913

TITLE OF INVENTION: LOW PROFILE COMPACT TOOL CARRIERS

APPLN. TYPE	ENTITY STATUS	ISSUE FEE DUE	PUBLICATION FEE DUE	PREV. PAID ISSUE FEE	TOTAL FEE(S) DUE	DATE DUE
nonprovisional	UNDISCOUNTED	$960	$0	$0	$960	05/17/2016

THE APPLICATION IDENTIFIED ABOVE HAS BEEN EXAMINED AND IS ALLOWED FOR ISSUANCE AS A PATENT. PROSECUTION ON THE MERITS IS CLOSED. THIS NOTICE OF ALLOWANCE IS NOT A GRANT OF PATENT RIGHTS. THIS APPLICATION IS SUBJECT TO WITHDRAWAL FROM ISSUE AT THE INITIATIVE OF THE OFFICE OR UPON PETITION BY THE APPLICANT. SEE 37 CFR 1.313 AND MPEP 1308.

THE ISSUE FEE AND PUBLICATION FEE (IF REQUIRED) MUST BE PAID WITHIN THREE MONTHS FROM THE MAILING DATE OF THIS NOTICE OR THIS APPLICATION SHALL BE REGARDED AS ABANDONED. THIS STATUTORY PERIOD CANNOT BE EXTENDED. SEE 35 U.S.C. 151. THE ISSUE FEE DUE INDICATED ABOVE DOES NOT REFLECT A CREDIT FOR ANY PREVIOUSLY PAID ISSUE FEE IN THIS APPLICATION. IF AN ISSUE FEE HAS PREVIOUSLY BEEN PAID IN THIS APPLICATION (AS SHOWN ABOVE), THE RETURN OF PART B OF THIS FORM WILL BE CONSIDERED A REQUEST TO REAPPLY THE PREVIOUSLY PAID ISSUE FEE TOWARD THE ISSUE FEE NOW DUE.

HOW TO REPLY TO THIS NOTICE:

I. Review the ENTITY STATUS shown above. If the ENTITY STATUS is shown as SMALL or MICRO, verify whether entitlement to that entity status still applies.

If the ENTITY STATUS is the same as shown above, pay the TOTAL FEE(S) DUE shown above.

If the ENTITY STATUS is changed from that shown above, on PART B - FEE(S) TRANSMITTAL, complete section number 5 titled "Change in Entity Status (from status indicated above)".

For purposes of this notice, small entity fees are 1/2 the amount of undiscounted fees, and micro entity fees are 1/2 the amount of small entity fees.

II. PART B - FEE(S) TRANSMITTAL, or its equivalent, must be completed and returned to the United States Patent and Trademark Office (USPTO) with your ISSUE FEE and PUBLICATION FEE (if required). If you are charging the fee(s) to your deposit account, section "4b" of Part B - Fee(s) Transmittal should be completed and an extra copy of the form should be submitted. If an equivalent of Part B is filed, a request to reapply a previously paid issue fee must be clearly made, and delays in processing may occur due to the difficulty in recognizing the paper as an equivalent of Part B.

III. All communications regarding this application must give the application number. Please direct all communications prior to issuance to Mail Stop ISSUE FEE unless advised to the contrary.

IMPORTANT REMINDER: Utility patents issuing on applications filed on or after Dec. 12, 1980 may require payment of maintenance fees. It is patentee's responsibility to ensure timely payment of maintenance fees when due.

PTOL-85 (Rev. 02/11)

UNITED STATES PATENT AND TRADEMARK OFFICE

UNITED STATES DEPARTMENT OF COMMERCE
United States Patent and Trademark Office
Address: COMMISSIONER FOR PATENTS
P.O. Box 1450
Alexandria, Virginia 22313-1450
www.uspto.gov

APPLICATION NO.	FILING DATE	FIRST NAMED INVENTOR	ATTORNEY DOCKET NO.	CONFIRMATION NO.
14/691,649	04/21/2015	Brad Thomas	31681-31	7913

76656 7590 02/17/2016
Patent Docket Department
Armstrong Teasdale LLP
7700 Forsyth Boulevard
Suite 1800
St. Louis, MO 63105

EXAMINER
KRAMER, DEAN J

ART UNIT	PAPER NUMBER
3652	

DATE MAILED: 02/17/2016

Determination of Patent Term Adjustment under 35 U.S.C. 154 (b)
(Applications filed on or after May 29, 2000)

The Office has discontinued providing a Patent Term Adjustment (PTA) calculation with the Notice of Allowance.

Section 1(h)(2) of the AIA Technical Corrections Act amended 35 U.S.C. 154(b)(3)(B)(i) to eliminate the requirement that the Office provide a patent term adjustment determination with the notice of allowance. See Revisions to Patent Term Adjustment, 78 Fed. Reg. 19416, 19417 (Apr. 1, 2013). Therefore, the Office is no longer providing an initial patent term adjustment determination with the notice of allowance. The Office will continue to provide a patent term adjustment determination with the Issue Notification Letter that is mailed to applicant approximately three weeks prior to the issue date of the patent, and will include the patent term adjustment on the patent. Any request for reconsideration of the patent term adjustment determination (or reinstatement of patent term adjustment) should follow the process outlined in 37 CFR 1.705.

Any questions regarding the Patent Term Extension or Adjustment determination should be directed to the Office of Patent Legal Administration at (571)-272-7702. Questions relating to issue and publication fee payments should be directed to the Customer Service Center of the Office of Patent Publication at 1-(888)-786-0101 or (571)-272-4200.

PTOL-85 (Rev. 02/11)

Notice of Allowability	Application No. 14/691,649	Applicant(s) THOMAS ET AL.	
	Examiner DEAN KRAMER	Art Unit 3652	AIA (First Inventor to File) Status Yes

-- The MAILING DATE of this communication appears on the cover sheet with the correspondence address--

All claims being allowable, PROSECUTION ON THE MERITS IS (OR REMAINS) CLOSED in this application. If not included herewith (or previously mailed), a Notice of Allowance (PTOL-85) or other appropriate communication will be mailed in due course. **THIS NOTICE OF ALLOWABILITY IS NOT A GRANT OF PATENT RIGHTS.** This application is subject to withdrawal from issue at the initiative of the Office or upon petition by the applicant. See 37 CFR 1.313 and MPEP 1308.

1. ☒ This communication is responsive to *the amendment filed 1/21/16.*
   ☐ A declaration(s)/affidavit(s) under **37 CFR 1.130(b)** was/were filed on_____.
2. ☐ An election was made by the applicant in response to a restriction requirement set forth during the interview on _____; the restriction requirement and election have been incorporated into this action.
3. ☒ The allowed claim(s) is/are *1,3-14,16-19 and 21-23.* As a result of the allowed claim(s), you may be eligible to benefit from the **Patent Prosecution Highway** program at a participating intellectual property office for the corresponding application. For more information, please see http://www.uspto.gov/patents/init_events/pph/index.jsp or send an inquiry to PPHfeedback@uspto.gov .
4. ☐ Acknowledgment is made of a claim for foreign priority under 35 U.S.C. § 119(a)-(d) or (f).

   Certified copies:

   a) ☐ All b) ☐ Some *c) ☐ None of the:
   1. ☐ Certified copies of the priority documents have been received.
   2. ☐ Certified copies of the priority documents have been received in Application No. _____ .
   3. ☐ Copies of the certified copies of the priority documents have been received in this national stage application from the International Bureau (PCT Rule 17.2(a)).

   * Certified copies not received: _____.

Applicant has THREE MONTHS FROM THE "MAILING DATE" of this communication to file a reply complying with the requirements noted below. Failure to timely comply will result in ABANDONMENT of this application.
THIS THREE-MONTH PERIOD IS NOT EXTENDABLE.

5. ☐ CORRECTED DRAWINGS (as "replacement sheets") must be submitted.
   ☐ including changes required by the attached Examiner's Amendment / Comment or in the Office action of Paper No./Mail Date _____.

   Identifying indicia such as the application number (see 37 CFR 1.84(c)) should be written on the drawings in the front (not the back) of each sheet. Replacement sheet(s) should be labeled as such in the header according to 37 CFR 1.121(d).
6. ☐ DEPOSIT OF and/or INFORMATION about the deposit of BIOLOGICAL MATERIAL must be submitted. Note the attached Examiner's comment regarding REQUIREMENT FOR THE DEPOSIT OF BIOLOGICAL MATERIAL.

Attachment(s)

1. ☐ Notice of References Cited (PTO-892)
2. ☐ Information Disclosure Statements (PTO/SB/08), Paper No./Mail Date _____
3. ☐ Examiner's Comment Regarding Requirement for Deposit of Biological Material
4. ☐ Interview Summary (PTO-413), Paper No./Mail Date _____ .
5. ☐ Examiner's Amendment/Comment
6. ☐ Examiner's Statement of Reasons for Allowance
7. ☐ Other _____.

/DEAN KRAMER/ Primary Examiner, Art Unit 3652	

UNITED STATES PATENT AND TRADEMARK OFFICE

UNITED STATES DEPARTMENT OF COMMERCE
United States Patent and Trademark Office
Address: COMMISSIONER FOR PATENTS
P.O. Box 1450
Alexandria, Virginia 22313-1450
www.uspto.gov

BIB DATA SHEET

CONFIRMATION NO. 7913

SERIAL NUMBER	FILING or 371(c) DATE	CLASS	GROUP ART UNIT	ATTORNEY DOCKET NO.
14/691,649	04/21/2015 RULE	414	3652	31681-31

APPLICANTS
Vermeer Manufacturing Company, Pella, IA

INVENTORS
Brad Thomas, Pleasant Hill, IA;
Louis Hartke, Pella, IA;
Greg Langenfeld, Bettendorf, IA;
Matt Hutchinson, Pella, IA;

**** CONTINUING DATA ****************************
This appln claims benefit of 62/118,860 02/20/2015

**** FOREIGN APPLICATIONS ****************************

**** IF REQUIRED, FOREIGN FILING LICENSE GRANTED ****
04/30/2015

Foreign Priority claimed	☐ Yes ☑ No	☐ Met after Allowance	STATE OR COUNTRY	SHEETS DRAWINGS	TOTAL CLAIMS	INDEPENDENT CLAIMS
35 USC 119(a-d) conditions met	☐ Yes ☑ No		IA	7	20	2
Verified and Acknowledged	/DEAN J KRAMER/ Examiner's Signature	Initials				

ADDRESS
Patent Docket Department
Armstrong Teasdale LLP
7700 Forsyth Boulevard
Suite 1800
St. Louis, MO 63105
UNITED STATES

TITLE
LOW PROFILE COMPACT TOOL CARRIERS

FILING FEE RECEIVED		
1740	FEES: Authority has been given in Paper No._____ to charge/credit DEPOSIT ACCOUNT No._____ for following:	☐ All Fees ☐ 1.16 Fees (Filing) ☐ 1.17 Fees (Processing Ext. of time) ☐ 1.18 Fees (Issue) ☐ Other _____ ☐ Credit

BIB (Rev. 05/07).

UNITED STATES PATENT AND TRADEMARK OFFICE

UNITED STATES DEPARTMENT OF COMMERCE
United States Patent and Trademark Office
Address: COMMISSIONER FOR PATENTS
P.O. Box 1450
Alexandria, Virginia 22313-1450
www.uspto.gov

APPLICATION NO.	FILING DATE	FIRST NAMED INVENTOR	ATTORNEY DOCKET NO.	CONFIRMATION NO.
14/691,649	04/21/2015	Brad Thomas	31681-31	7913

76656 7590 01/22/2016
Patent Docket Department
Armstrong Teasdale LLP
7700 Forsyth Boulevard
Suite 1800
St. Louis, MO 63105

EXAMINER
KRAMER, DEAN J

ART UNIT	PAPER NUMBER
3652	

NOTIFICATION DATE	DELIVERY MODE
01/22/2016	ELECTRONIC

Please find below and/or attached an Office communication concerning this application or proceeding.

The time period for reply, if any, is set in the attached communication.

Notice of the Office communication was sent electronically on above-indicated "Notification Date" to the following e-mail address(es):

USpatents@armstrongteasdale.com

PTOL-90A (Rev. 04/07)

Applicant-Initiated Interview Summary	Application No.	Applicant(s)	
	14/691,649	THOMAS ET AL.	
	Examiner	Art Unit	
	DEAN KRAMER	3652	

All participants (applicant, applicant's representative, PTO personnel):

(1) *DEAN KRAMER*.

(2) *Michael Vander Molen*.

(3) *Jeff Knapp*.

(4) *Scott Rempe*.

Date of Interview: *15 January 2016*.

Type: ☒ Telephonic ☐ Video Conference
☐ Personal [copy given to: ☐ applicant ☐ applicant's representative]

Exhibit shown or demonstration conducted: ☐ Yes ☒ No.
If Yes, brief description: _____.

Issues Discussed ☐101 ☐112 ☐102 ☒103 ☐Others
(For each of the checked box(es) above, please describe below the issue and detailed description of the discussion)

Claim(s) discussed: *1*.

Identification of prior art discussed: *all of record*.

Substance of Interview
(For each issue discussed, provide a detailed description and indicate if agreement was reached. Some topics may include: identification or clarification of a reference or a portion thereof, claim interpretation, proposed amendments, arguments of any applied references etc...)

Discussed the rejections set forth in the Final Office action dated 10/23/15. Mr. Vander Molen described the industry standard difference between a "compact tool carrier" and a small or compact "skid steer". The Yasuda et al. patent (8,821,104) that was used as the base reference in the 35 U.S.C. 103 final rejection is directed to a skid steer containing an enclosed cabin (4) that is shielded from the heat produced by the rear mounted engine (101) (see column 27, lines 38-49). In contrast, the tool carrier of the instant invention has a walk-behind operator control disposed at the rear of the carrier. An amendment to claim 1 further defining an engine bracket that is spaced from the rear end of the mainframe (see bracket 60 in Figure 6 of the drawings) would define over the Yasuda et al. patent which requires its engine to be located at the rear of the mainframe away from the cabin (4). .

Applicant recordation instructions: The formal written reply to the last Office action must include the substance of the interview. (See MPEP section 713.04). If a reply to the last Office action has already been filed, applicant is given a non-extendable period of the longer of one month or thirty days from this interview date, or the mailing date of this interview summary form, whichever is later, to file a statement of the substance of the interview

Examiner recordation instructions: Examiners must summarize the substance of any interview of record. A complete and proper recordation of the substance of an interview should include the items listed in MPEP 713.04 for complete and proper recordation including the identification of the general thrust of each argument or issue discussed, a general indication of any other pertinent matters discussed regarding patentability and the general results or outcome of the interview, to include an indication as to whether or not agreement was reached on the issues raised.

☐ Attachment

/DEAN KRAMER/
Primary Examiner, Art Unit 3652

Summary of Record of Interview Requirements

Manual of Patent Examining Procedure (MPEP), Section 713.04, Substance of Interview Must be Made of Record
A complete written statement as to the substance of any face-to-face, video conference, or telephone interview with regard to an application must be made of record in the application whether or not an agreement with the examiner was reached at the interview.

Title 37 Code of Federal Regulations (CFR) § 1.133 Interviews
Paragraph (b)

In every instance where reconsideration is requested in view of an interview with an examiner, a complete written statement of the reasons presented at the interview as warranting favorable action must be filed by the applicant. An interview does not remove the necessity for reply to Office action as specified in §§ 1.111, 1.135. (35 U.S.C. 132)

37 CFR §1.2 Business to be transacted in writing.
All business with the Patent or Trademark Office should be transacted in writing. The personal attendance of applicants or their attorneys or agents at the Patent and Trademark Office is unnecessary. The action of the Patent and Trademark Office will be based exclusively on the written record in the Office. No attention will be paid to any alleged oral promise, stipulation, or understanding in relation to which there is disagreement or doubt.

The action of the Patent and Trademark Office cannot be based exclusively on the written record in the Office if that record is itself incomplete through the failure to record the substance of interviews.

It is the responsibility of the applicant or the attorney or agent to make the substance of an interview of record in the application file, unless the examiner indicates he or she will do so. It is the examiner's responsibility to see that such a record is made and to correct material inaccuracies which bear directly on the question of patentability.

Examiners must complete an Interview Summary Form for each interview held where a matter of substance has been discussed during the interview by checking the appropriate boxes and filling in the blanks. Discussions regarding only procedural matters, directed solely to restriction requirements for which interview recordation is otherwise provided for in Section 812.01 of the Manual of Patent Examining Procedure, or pointing out typographical errors or unreadable script in Office actions or the like, are excluded from the interview recordation procedures below. Where the substance of an interview is completely recorded in an Examiners Amendment, no separate Interview Summary Record is required.

The Interview Summary Form shall be given an appropriate Paper No., placed in the right hand portion of the file, and listed on the "Contents" section of the file wrapper. In a personal interview, a duplicate of the Form is given to the applicant (or attorney or agent) at the conclusion of the interview. In the case of a telephone or video-conference interview, the copy is mailed to the applicant's correspondence address either with or prior to the next official communication. If additional correspondence from the examiner is not likely before an allowance or if other circumstances dictate, the Form should be mailed promptly after the interview rather than with the next official communication.

The Form provides for recordation of the following information:
- Application Number (Series Code and Serial Number)
- Name of applicant
- Name of examiner
- Date of interview
- Type of interview (telephonic, video-conference, or personal)
- Name of participant(s) (applicant, attorney or agent, examiner, other PTO personnel, etc.)
- An indication whether or not an exhibit was shown or a demonstration conducted
- An identification of the specific prior art discussed
- An indication whether an agreement was reached and if so, a description of the general nature of the agreement (may be by attachment of a copy of amendments or claims agreed as being allowable). Note: Agreement as to allowability is tentative and does not restrict further action by the examiner to the contrary.
- The signature of the examiner who conducted the interview (if Form is not an attachment to a signed Office action)

It is desirable that the examiner orally remind the applicant of his or her obligation to record the substance of the interview of each case. It should be noted, however, that the Interview Summary Form will not normally be considered a complete and proper recordation of the interview unless it includes, or is supplemented by the applicant or the examiner to include, all of the applicable items required below concerning the substance of the interview.

A complete and proper recordation of the substance of any interview should include at least the following applicable items:
1) A brief description of the nature of any exhibit shown or any demonstration conducted,
2) an identification of the claims discussed,
3) an identification of the specific prior art discussed,
4) an identification of the principal proposed amendments of a substantive nature discussed, unless these are already described on the Interview Summary Form completed by the Examiner,
5) a brief identification of the general thrust of the principal arguments presented to the examiner,
   (The identification of arguments need not be lengthy or elaborate. A verbatim or highly detailed description of the arguments is not required. The identification of the arguments is sufficient if the general nature or thrust of the principal arguments made to the examiner can be understood in the context of the application file. Of course, the applicant may desire to emphasize and fully describe those arguments which he or she feels were or might be persuasive to the examiner.)
6) a general indication of any other pertinent matters discussed, and
7) if appropriate, the general results or outcome of the interview unless already described in the Interview Summary Form completed by the examiner.

Examiners are expected to carefully review the applicant's record of the substance of an interview. If the record is not complete and accurate, the examiner will give the applicant an extendable one month time period to correct the record.

Examiner to Check for Accuracy

If the claims are allowable for other reasons of record, the examiner should send a letter setting forth the examiner's version of the statement attributed to him or her. If the record is complete and accurate, the examiner should place the indication, "Interview Record OK" on the paper recording the substance of the interview along with the date and the examiner's initials.

PTO/SB/30EFS (07-14)
Approved for use through 07/31/2016. OMB 0651-0031
U.S. Patent and Trademark Office; U.S. DEPARTMENT OF COMMERCE

Under the Paperwork Reduction Act of 1995, no persons are required to respond to a collection of information unless it contains a valid OMB control number.

REQUEST FOR CONTINUED EXAMINATION(RCE)TRANSMITTAL
(Submitted Only via EFS-Web)

Application Number	14691649	Filing Date	2015-04-21	Docket Number (if applicable)	31681-31	Art Unit	3652
First Named Inventor	Brad Thomas			Examiner Name	Dean J. Kramer		

This is a Request for Continued Examination (RCE) under 37 CFR 1.114 of the above-identified application.
Request for Continued Examination (RCE) practice under 37 CFR 1.114 does not apply to any utility or plant application filed prior to June 8, 1995, to any international application that does not comply with the requirements of 35 U.S.C. 371, or to any design application. The Instruction Sheet for this form is located at WWW.USPTO.GOV.

SUBMISSION REQUIRED UNDER 37 CFR 1.114

Note: If the RCE is proper, any previously filed unentered amendments and amendments enclosed with the RCE will be entered in the order in which they were filed unless applicant instructs otherwise. If applicant does not wish to have any previously filed unentered amendment(s) entered, applicant must request non-entry of such amendment(s).

☐ Previously submitted. If a final Office action is outstanding, any amendments filed after the final Office action may be considered as a submission even if this box is not checked.

- ☐ Consider the arguments in the Appeal Brief or Reply Brief previously filed on _____
- ☐ Other _____

☒ Enclosed

- ☒ Amendment/Reply
- ☐ Information Disclosure Statement (IDS)
- ☐ Affidavit(s)/ Declaration(s)
- ☐ Other _____

MISCELLANEOUS

☐ Suspension of action on the above-identified application is requested under 37 CFR 1.103(c) for a period of months _____
(Period of suspension shall not exceed 3 months; Fee under 37 CFR 1.17(i) required)

☐ Other _____

FEES

☒ **The RCE fee under 37 CFR 1.17(e) is required by 37 CFR 1.114 when the RCE is filed.**
The Director is hereby authorized to charge any underpayment of fees, or credit any overpayments, to Deposit Account No 012384

SIGNATURE OF APPLICANT, ATTORNEY, OR AGENT REQUIRED

☒ Patent Practitioner Signature
Applicant Signature

PTO/SB/30EFS (07-14)
Approved for use through 07/31/2016. OMB 0651-0031
U.S. Patent and Trademark Office; U.S. DEPARTMENT OF COMMERCE
Under the Paperwork Reduction Act of 1995, no persons are required to respond to a collection of information unless it contains a valid OMB control number.

Signature of Registered U.S. Patent Practitioner			
Signature	/Michael J. Vander Molen/	Date (YYYY-MM-DD)	2016-01-21
Name	Michael J. Vander Molen	Registration Number	57274

This collection of information is required by 37 CFR 1.114. The information is required to obtain or retain a benefit by the public which is to file (and by the USPTO to process) an application. Confidentiality is governed by 35 U.S.C. 122 and 37 CFR 1.11 and 1.14. This collection is estimated to take 12 minutes to complete, including gathering, preparing, and submitting the completed application form to the USPTO. Time will vary depending upon the individual case. Any comments on the amount of time you require to complete this form and/or suggestions for reducing this burden, should be sent to the Chief Information Officer, U.S. Patent and Trademark Office, U.S. Department of Commerce, P.O. Box 1450, Alexandria, VA 22313-1450.

If you need assistance in completing the form, call 1-800-PTO-9199 and select option 2.

IN THE UNITED STATES PATENT AND TRADEMARK OFFICE

Application of: Brad Thomas Art Unit: 3652
Serial No.: 14/691,649
Filed On: April 21, 2015
Confirmation No.: 7913
For: LOW PROFILE COMPACT TOOL CARRIERS
Examiner: Dean J. Kramer

January 21, 2016

AMENDMENT C

TO THE COMMISSIONER FOR PATENTS,

SIR:

In response to the final Office Action dated October 23, 2015 and the Advisory Action dated December 14, 2015, please enter the following amendments and consider the following remarks submitted concurrently with a Request for Continued Examination:

Amendments to the Claims are reflected in the Listing of Clams which begins on page 2; and

Remarks begin on page 8.

AMENDMENTS TO THE CLAIMS

The following listing of claims will replace all prior versions and listings of claims in the application.

Listing of Claims

1. (Currently amended) A compact tool carrier configured for standing or walk-behind operator control and having a **longitudinal axis and a** mass of less than about 1500 kg, the compact tool carrier comprising:

a loader having an arm, the loader being adapted to carry a tool;

a mainframe for supporting the loader, the mainframe having a first side and a second side, **and having a front end and a rear end relative to the longitudinal axis, the mainframe comprising an engine bracket that extends from the first side toward the second side for mounting an engine to the mainframe, the engine bracket being spaced from the rear end of the mainframe,** the loader arm not being directly attached to the mainframe;

a linkage pivotally attached to the first side of the mainframe and pivotally attached to the loader arm;

an actuator pivotally attached to the first side of the mainframe and pivotally attached to the loader arm; and

a control station having operator controls for propelling the compact tool carrier forward and for raising and lowering the loader, the control station ~~being configured for~~

~~**remote operation or**~~ being mounted toward the rear of the compact tool carrier and adapted to allow for standing or walk-behind operation.

2. (Cancelled)

3. (Currently amended) The compact tool carrier as set forth in claim **1** **[[2]]** wherein the mainframe incorporates a single weldment.

4. (Previously presented) The compact tool carrier as set forth in claim 1 wherein the loader arm is a first loader arm and the linkage is a first linkage, the loader comprising a second loader arm and the compact tool carrier comprising a second linkage pivotally attached to the second side of the mainframe and pivotally attached to the second loader arm.

5. (Previously presented) The compact tool carrier as set forth in claim 4 wherein the actuator is a first actuator, the compact tool carrier comprising a second actuator, the second actuator being pivotally attached to the second side of the mainframe and pivotally attached to the second loader arm.

6. (Previously presented) The compact tool carrier as set forth in claim 1 comprising a drive mechanism comprising tracks or wheels, the drive mechanism being attached to the mainframe.

7. (Currently amended) The compact tool carrier as set forth in claim 1 comprising an engine to propel a drive mechanism, the engine being attached to the **engine bracket** ~~**mainframe**~~.

8. (Original) The compact tool carrier as set forth in claim 1 wherein the actuator is a hydraulic cylinder.

9. (Original) The compact tool carrier as set forth in claim 1 wherein each loader arm incorporates a single weldment.

10. (Original) The compact tool carrier as set forth in claim 1 wherein the control station is mounted toward the rear of the compact tool carrier, the compact tool carrier comprising an operator platform for standing operation of the compact tool carrier, the difference between the height of the control station and the height of the platform being at least 90 cm.

11. (Original) The compact tool carrier as set forth in claim 1 wherein the control station is mounted toward the rear of the compact tool carrier, and the height of the control station from a surface supporting the compact tool carrier is at least 90 cm.

12. (Original) A method for operating the compact tool carrier as set forth in claim 1, the method comprising standing behind the compact tool carrier and operating the control station to propel the compact tool carrier forward and/or raise or lower the loader.

13. (Original) The method as set forth in claim 12 wherein the control station is operated while standing on an operator platform or while standing on a surface supporting the compact tool carrier.

14. (Currently amended) A compact tool carrier comprising:

a loader adapted to carry a tool;

a mainframe for supporting the loader, the mainframe having a first side and a second side, **and having a front end and a rear end relative to the longitudinal axis, the mainframe comprising an engine bracket that extends from the first side toward the second side for mounting an engine to the mainframe, the engine bracket being spaced from the rear end of the mainframe,** each side having a top and a bottom, the first side of the mainframe having at least two pivot points relative to the loader, the loader not being directly attached to the mainframe;

a linkage pivotally attached to the first side of the mainframe at a pivot point and pivotally attached to the loader;

an actuator pivotally attached to the first side of the mainframe at a pivot point and pivotally attached to the loader;

a drive mechanism comprising tracks or wheels for propelling the compact tool carrier over a supporting surface, the drive mechanism being attached to the mainframe about a rotational axis, the compact tool carrier having a bottom at which the drive mechanism contacts the supporting surface, the rotational axis and bottom of the compact tool carrier being separated by a vertical distance D1, the rotational axis and each pivot point being separated by a vertical distance, each

vertical distance between the rotational axis and a pivot point being less than 1.5 times D1; and

a control station having operator controls for propelling the compact tool carrier forward and for raising and/or lowering the loader, the control station being mounted toward the rear of the compact tool carrier and adapted to allow for standing or walk-behind operation.

15. (Cancelled)

16. (Previously presented) The compact tool carrier as set forth in claim 14 wherein the rotational axis and the pivot point at which the linkage is attached are separated by a vertical distance D2, the rotational axis and the pivot point at which the actuator is attached are separated by a vertical distance D3, both D2 and D3 being less than 1.5 times D1.

17. (Original) The compact tool carrier as set forth in claim 16 wherein the second side of the mainframe comprises two pivot points, each vertical distance between the rotational axis and a pivot point being less than 1.5 times D1.

18. (Original) The compact tool carrier as set forth in claim 16 wherein the rotational axis and the bottom of the first side of the mainframe are separated by a vertical distance D5, both D2 and D3 being less than twice D5.

19. (Original) The compact tool carrier as set forth in claim 18 wherein the first side of the mainframe comprises a top most pivot point, the top most pivot point and the top of

the first side of the mainframe being separated by a vertical distance D6, D6 being less than about 1.5 times D5.

20. (Cancelled)

21. (Previously presented) The compact tool carrier as set forth in claim 1 further comprising a tool attached to the loader, the tool being selected from the group consisting of a bucket, auger, fork, stump grinder, tiller and roller.

22. (Previously presented) The compact tool carrier as set forth in claim 14 further comprising a tool attached to the loader, the tool being selected from the group consisting of a bucket, auger, fork, stump grinder, tiller and roller.

23. (New) The compact tool carrier as set forth in claim 1 wherein a single linkage is attached to the first side of the mainframe and pivotally attached to the loader arm.

REMARKS

Applicant respectfully requests reconsideration and allowance of all pending claims.

Status of the Claims

Applicant has amended claims 1, 3, 7 and 14 and added claim 23. Claims 1, 3-14, 16-19 and 21-23 will be pending upon entry of this Amendment C.

As the claim amendments submitted in Amendment B dated December 3, 2015 were not entered by the Examiner, the present Listing of Claims shows the claims as marked-up from the Listing of Claims submitted in Amendment A dated October 12, 2015.

Interview Summary

The undersigned attorney of record thanks the Examiner for the courteous telephone interview of January 15. The Examiner, the undersigned attorney, Jeff Knapp (Reg. No. 45,384) and Scott Rempe (Reg. No. 47,018) agents for Applicant, took part in the interview. The pending claims and prior art of record (e.g., Yasuda, Bares) were discussed. Potential amendments that would overcome the outstanding rejections were also discussed. The Examiner indicated that the present amendment to claim 1[1] would overcome the outstanding rejection of claim 1 under 35 U.S.C. §103(a) over Yasuda in view of Bares; however, an additional prior art search would be performed. Applicant agreed to present the amendment and further arguments in a response filed

[1] Applicant notes that claim 1 has also been amended herein by removing the phrase "configured for remote operation".

with a Request for Continued Examination for consideration by the Examiner.

Rejections under 35 U.S.C. §112(b)

The Office has rejected claim 3 under 35 U.S.C. §112(b) for being indefinite as claim 3 depends from cancelled claim 2. Applicant has amended claim 3 by changing its dependency from claim 2 to claim 1, thereby obviating the rejection of the Office.

Rejections under 35 U.S.C. §103

The Office has rejected claims 1, 3-9, 11, 12, 14, 16-19, 21 and 22 under 35 U.S.C. §103 as being obvious over U.S. Patent No. 8,821,104 to Yasuda et al. ("Yasuda") in view of U.S. Patent No. 6,695,568 to Bares et al. ("Bares"). Claims 10 and 13 are rejected under 35 U.S.C. §103 as being obvious over Yasuda in view of Bares and in further view of U.S. Pat. Pub. No. 2009/0116943 to Valere ("Valere"). Applicant submits that the pending claims are patentable over the cited references in view to the amendment to claim 1.

The Office indicates on pages 3-4 of the Office action that the basis for its obviousness rationale is that it would be obvious "to form a control station at the rear of the Yasuda et al. carrier, similar to that shown in the Bares et al. patent, so that an operator could walk behind the resulting vehicle while controlling its movement. This rear-mounted control station would result in a more compact and lighter weight assembly (e.g. having a mass less than 1500 kg.) enabling better maneuverability over certain terrain and in congested spaces."

As amended independent claims 1 and 14 require a control station having operator controls for propelling the compact tool carrier forward and for raising and lowering the loader, the control station being mounted toward the rear of the compact carrier and further wherein the mainframe includes an engine bracket that is spaced from the rear of the mainframe. The rationale of the Office does not hold as one of skill in the art would not modify the standard sized skid steer of Yasuda as suggested by the Office as putting the operator controls at the rear of the skid steer would require that the engine configuration of Yasuda be moved toward the center of the mainframe and require that the operator be positioned outside of the protective cage.

With reference to Figure 1 of the present application reproduced below, the compact tool carrier comprises a control station 36 mounted toward the rear of the apparatus.

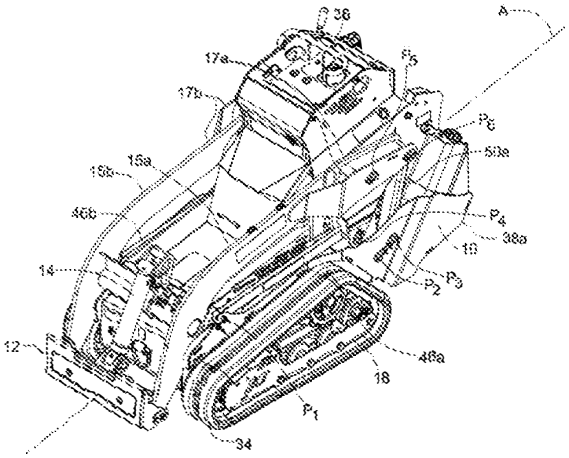

Fig. 1 of the Present Application

As shown in Figure 6 reproduced below, the mainframe 10 includes an engine bracket 60 spaced from the rear end of the mainframe to allow the engine to be spaced from the operator.

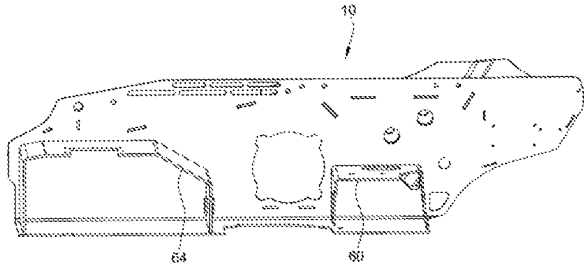

Fig. 6 of the Present Application

With reference to Figure 1 of Yasuda, the skid steer includes a "cabin (driver protector) 4" **towards the front** of the skid steer within which the operator controls are positioned.

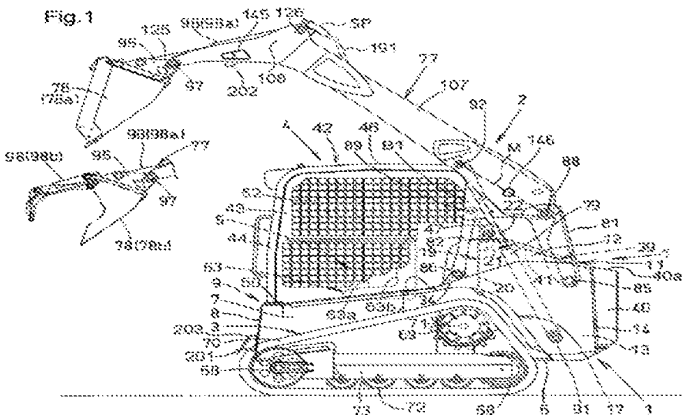

Fig. 1 of Yasuda

As shown in Figure 6 of Yasuda, the engine 101 is mounted to an elongate member 28 **at the rear** of the "frame main body 9". A

partition plate 80, bottom wall body 58, and back wall body 51 shield the operator from the heat of the engine 101.

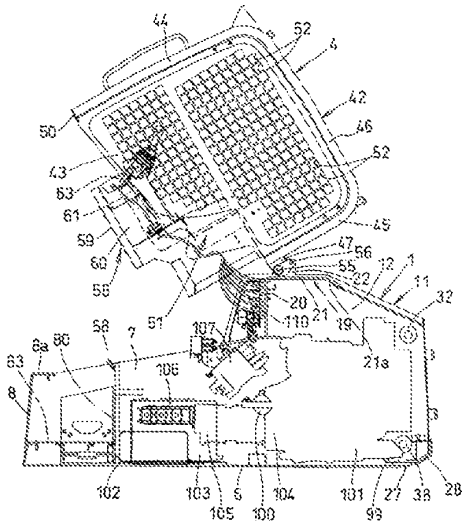

Fig. 21 of Yasuda

One of skill in the art would not modify Yasuda by placing the operator controls toward the rear of the apparatus as this arrangement would place the operator near the engine 101. As stated in Yasuda, it is critically important to isolate the operator from the engine:

> [0236] By the partition plate 80 and the bottom wall body 58 and back wall body 51 of the cabin 4, the portions frontward of the back wall body 51 of the cabin 4 and the front portion of the body frame 1 are **shielded from the rear portion of the body frame 1 on which the engine 101 is mounted**. Therefore, **heated air from the engine 101** in the rear portion of the body

> frame 1 **can be surely blocked by the partition plate 80 and the bottom wall body 8 and back wall body 51** of the cabin 4. Accordingly, the **heated air from the engine 101 never reach the driver in the cabin 4** who is seated on the driver's seat 63 or driver's legs or the like extending in the body frame 1, and the driver can be **surely protected from the heat of the engine**.

To move the control station as suggested by the Office would cause the operator to be exposed to the heat of the engine which would be a change in the principle of operation of the apparatus. MPEP 2143.01(VI))

Further, to move the engine mount (i.e., the elongate member) of the apparatus from the rear of the body frame 1 of Yasuda as recited in claim 1 would require a significant redesign of the apparatus and would also fundamentally change its mode of operation. Moving the engine mount from the rear of the apparatus would cause the engine to be mounted closer to the operator and would change the weight distribution of the apparatus which may cause the apparatus to become unsteady and more prone to tip.

For at least these reasons claims 1 and 14 as amended and claims depending therefrom are patentable over Yasuda in view of Bares. In regard to Valere which is cited by the Office to reject several of the dependent claims, Valere does not cure the deficiencies of Yasuda in view of Bares noted above.

Applicant respectfully requests allowance of this application. Applicant authorizes the Commissioner to charge

any fees due in connection with this Amendment C including the fees for filing of a Request for Continued Examination, to Deposit Account No. 012384 in the name of Armstrong Teasdale LLP.

Respectfully submitted,

/Michael J. Vander Molen/

Michael J. Vander Molen
Reg. No. 57,274
Armstrong Teasdale, LLP
7700 Forsyth Blvd, Suite 1800
St. Louis, Missouri 63105
(314) 621-5070

MJV/dlb

UNITED STATES PATENT AND TRADEMARK OFFICE

UNITED STATES DEPARTMENT OF COMMERCE
United States Patent and Trademark Office
Address: COMMISSIONER FOR PATENTS
P.O. Box 1450
Alexandria, Virginia 22313-1450
www.uspto.gov

APPLICATION NO.	FILING DATE	FIRST NAMED INVENTOR	ATTORNEY DOCKET NO.	CONFIRMATION NO.
14/691,649	04/21/2015	Brad Thomas	31681-31	7913

76656 7590 12/14/2015
Patent Docket Department
Armstrong Teasdale LLP
7700 Forsyth Boulevard
Suite 1800
St. Louis, MO 63105

EXAMINER
KRAMER, DEAN J

ART UNIT	PAPER NUMBER
3652	

NOTIFICATION DATE	DELIVERY MODE
12/14/2015	ELECTRONIC

Please find below and/or attached an Office communication concerning this application or proceeding.

The time period for reply, if any, is set in the attached communication.

Notice of the Office communication was sent electronically on above-indicated "Notification Date" to the following e-mail address(es):

USpatents@armstrongteasdale.com

PTOL-90A (Rev. 04/07)

Advisory Action Before the Filing of an Appeal Brief	**Application No.** *14/691,649*	**Applicant(*s*)** THOMAS ET AL.	
	Examiner DEAN KRAMER	**Art Unit** 3652	**AIA (First Inventor to File) Status** Yes

--The MAILING DATE of this communication appears on the cover sheet with the correspondence address --

THE REPLY FILED 03 December 2015 FAILS TO PLACE THIS APPLICATION IN CONDITION FOR ALLOWANCE.

NO NOTICE OF APPEAL FILED

1. ☒ The reply was filed after a final rejection. No Notice of Appeal has been filed. To avoid abandonment of this application, applicant must timely file one of the following replies: (1) an amendment, affidavit, or other evidence, which places the application in condition for allowance; (2) a Notice of Appeal (with appeal fee) in compliance with 37 CFR 41.31; or (3) a Request for Continued Examination (RCE) in compliance with 37 CFR 1.114 if this is a utility or plant application. Note that RCEs are not permitted in design applications. The reply must be filed within one of the following time periods:
   a) ☐ The period for reply expires ____months from the mailing date of the final rejection.
   b) ☒ The period for reply expires on: (1) the mailing date of this Advisory Action; or (2) the date set forth in the final rejection, whichever is later. In no event, however, will the statutory period for reply expire later than SIX MONTHS from the mailing date of the final rejection.
   c) ☐ A prior Advisory Action was mailed more than 3 months after the mailing date of the final rejection in response to a first after-final reply filed within 2 months of the mailing date of the final rejection. The current period for reply expires months from the mailing date of *the prior Advisory Action* or SIX MONTHS from the mailing date of the final rejection, whichever is earlier.
   Examiner Note: If box 1 is checked, check either box (a), (b) or (c). ONLY CHECK BOX (b) WHEN THIS ADVISORY ACTION IS THE FIRST RESPONSE TO APPLICANT'S FIRST AFTER-FINAL REPLY WHICH WAS FILED WITHIN TWO MONTHS OF THE FINAL REJECTION. ONLY CHECK BOX (c) IN THE LIMITED SITUATION SET FORTH UNDER BOX (c). See MPEP 706.07(f).

Extensions of time may be obtained under 37 CFR 1.136(a). The date on which the petition under 37 CFR 1.136(a) and the appropriate extension fee have been filed is the date for purposes of determining the period of extension and the corresponding amount of the fee. The appropriate extension fee under 37 CFR 1.17(a) is calculated from: (1) the expiration date of the shortened statutory period for reply originally set in the final Office action; or (2) as set forth in (b) or (c) above, if checked. Any reply received by the Office later than three months after the mailing date of the final rejection, even if timely filed, may reduce any earned patent term adjustment. See 37 CFR 1.704(b).

NOTICE OF APPEAL

2. ☐ The Notice of Appeal was filed on ____. A brief in compliance with 37 CFR 41.37 must be filed within two months of the date of filing the Notice of Appeal (37 CFR 41.37(a)), or any extension thereof (37 CFR 41.37(e)), to avoid dismissal of the appeal. Since a Notice of Appeal has been filed, any reply must be filed within the time period set forth in 37 CFR 41.37(a).

AMENDMENTS

3. ☒ The proposed amendments filed after a final rejection, but prior to the date of filing a brief, will not be entered because
   a) ☐ They raise new issues that would require further consideration and/or search (see NOTE below);
   b) ☐ They raise the issue of new matter (see NOTE below);
   c) ☐ They are not deemed to place the application in better form for appeal by materially reducing or simplifying the issues for appeal; and/or
   d) ☒ They present additional claims without canceling a corresponding number of finally rejected claims.
   NOTE: *See Continuation Sheet.* (See 37 CFR 1.116 and 41.33(a)).
4. ☐ The amendments are not in compliance with 37 CFR 1.121. See attached Notice of Non-Compliant Amendment (PTOL-324).
5. ☐ Applicant's reply has overcome the following rejection(s): _____.
6. ☐ Newly proposed or amended claim(s) _____ would be allowable if submitted in a separate, timely filed amendment canceling the non-allowable claim(s).
7. ☐ For purposes of appeal, the proposed amendment(s): (a) ☐ will not be entered, or (b) ☐ will be entered, and an explanation of how the new or amended claims would be rejected is provided below or appended.

AFFIDAVIT OR OTHER EVIDENCE

8. ☐ A declaration(s)/affidavit(s) under **37 CFR 1.130(b)** was/were filed on _____.
9. ☐ The affidavit or other evidence filed after final action, but before or on the date of filing a Notice of Appeal will not be entered because applicant failed to provide a showing of good and sufficient reasons why the affidavit or other evidence is necessary and was not earlier presented. See 37 CFR 1.116(e).
10. ☐ The affidavit or other evidence filed after the date of filing the Notice of Appeal, but prior to the date of filing a brief, will not be entered because the affidavit or other evidence failed to overcome all rejections under appeal and/or appellant fails to provide a showing of good and sufficient reasons why it is necessary and was not earlier presented. See 37 CFR 41.33(d)(1).
11. ☐ The affidavit or other evidence is entered. An explanation of the status of the claims after entry is below or attached.

REQUEST FOR RECONSIDERATION/OTHER

12. ☐ The request for reconsideration has been considered but does NOT place the application in condition for allowance because: _____.
13. ☐ Note the attached Information *Disclosure Statement*(s). (PTO/SB/08) Paper No(s). _____
14. ☐ Other: _____.

STATUS OF CLAIMS

15. The status of the claim(s) is (or will be) as follows:
   Claim(s) allowed: .
   Claim(s) objected to: .
   Claim(s) rejected: 1,3-14,16-19,21 and 22.
   Claim(s) withdrawn from consideration: .

/DEAN KRAMER/
Primary Examiner, Art Unit 3652

Continuation of 3. NOTE: newly proposed claim 23 would require a further consideration of the prior art. The arguments submitted with the proposed amendment have been carefully considered but are not deemed to overcome the rejections set forth in the Final Office action of 10/23/15.

AMENDMENTS TO THE CLAIMS

The following listing of claims will replace all prior versions and listings of claims in the application.

Listing of Claims

1. (Previously presented) A compact tool carrier configured for standing or walk-behind operator control and having a mass of less than about 1500 kg, the compact tool carrier comprising:

a loader having an arm, the loader being adapted to carry a tool;

a mainframe for supporting the loader, the mainframe having a first side and a second side, the loader arm not being directly attached to the mainframe;

a linkage pivotally attached to the first side of the mainframe and pivotally attached to the loader arm;

an actuator pivotally attached to the first side of the mainframe and pivotally attached to the loader arm; and

a control station having operator controls for propelling the compact tool carrier forward and for raising and lowering the loader, the control station being configured for remote operation or being mounted toward the rear of the compact tool carrier and adapted to allow for standing or walk-behind operation.

2. (Cancelled)

3. (Currently amended) The compact tool carrier as set forth in claim **1** **[[2]]** wherein the mainframe incorporates a single weldment.

4. (Previously presented) The compact tool carrier as set forth in claim 1 wherein the loader arm is a first loader arm and the linkage is a first linkage, the loader comprising a second loader arm and the compact tool carrier comprising a second linkage pivotally attached to the second side of the mainframe and pivotally attached to the second loader arm.

5. (Previously presented) The compact tool carrier as set forth in claim 4 wherein the actuator is a first actuator, the compact tool carrier comprising a second actuator, the second actuator being pivotally attached to the second side of the mainframe and pivotally attached to the second loader arm.

6. (Previously presented) The compact tool carrier as set forth in claim 1 comprising a drive mechanism comprising tracks or wheels, the drive mechanism being attached to the mainframe.

7. (Previously presented) The compact tool carrier as set forth in claim 1 comprising an engine to propel a drive mechanism, the engine being attached to the mainframe.

8. (Original) The compact tool carrier as set forth in claim 1 wherein the actuator is a hydraulic cylinder.

9. (Original) The compact tool carrier as set forth in claim 1 wherein each loader arm incorporates a single weldment.

10. (Original) The compact tool carrier as set forth in claim 1 wherein the control station is mounted toward the rear of the compact tool carrier, the compact tool carrier comprising an operator platform for standing operation of the compact tool carrier, the difference between the height of the control station and the height of the platform being at least 90 cm.

11. (Original) The compact tool carrier as set forth in claim 1 wherein the control station is mounted toward the rear of the compact tool carrier, and the height of the control station from a surface supporting the compact tool carrier is at least 90 cm.

12. (Original) A method for operating the compact tool carrier as set forth in claim 1, the method comprising standing behind the compact tool carrier and operating the control station to propel the compact tool carrier forward and/or raise or lower the loader.

13. (Original) The method as set forth in claim 12 wherein the control station is operated while standing on an operator platform or while standing on a surface supporting the compact tool carrier.

14. (Previously presented) A compact tool carrier comprising:

a loader adapted to carry a tool;

a mainframe for supporting the loader, the mainframe having a first side and a second side, each side having a top

and a bottom, the first side of the mainframe having at least two pivot points relative to the loader, the loader not being directly attached to the mainframe;

a linkage pivotally attached to the first side of the mainframe at a pivot point and pivotally attached to the loader;

an actuator pivotally attached to the first side of the mainframe at a pivot point and pivotally attached to the loader;

a drive mechanism comprising tracks or wheels for propelling the compact tool carrier over a supporting surface, the drive mechanism being attached to the mainframe about a rotational axis, the compact tool carrier having a bottom at which the drive mechanism contacts the supporting surface, the rotational axis and bottom of the compact tool carrier being separated by a vertical distance D1, the rotational axis and each pivot point being separated by a vertical distance, each vertical distance between the rotational axis and a pivot point being less than 1.5 times D1; and

a control station having operator controls for propelling the compact tool carrier forward and for raising and/or lowering the loader, the control station being mounted toward the rear of the compact tool carrier and adapted to allow for standing or walk-behind operation.

15. (Cancelled)

16. (Previously presented) The compact tool carrier as set forth in claim 14 wherein the rotational axis and the

pivot point at which the linkage is attached are separated by a vertical distance D2, the rotational axis and the pivot point at which the actuator is attached are separated by a vertical distance D3, both D2 and D3 being less than 1.5 times D1.

17. (Original) The compact tool carrier as set forth in claim 16 wherein the second side of the mainframe comprises two pivot points, each vertical distance between the rotational axis and a pivot point being less than 1.5 times D1.

18. (Original) The compact tool carrier as set forth in claim 16 wherein the rotational axis and the bottom of the first side of the mainframe are separated by a vertical distance D5, both D2 and D3 being less than twice D5.

19. (Original) The compact tool carrier as set forth in claim 18 wherein the first side of the mainframe comprises a top most pivot point, the top most pivot point and the top of the first side of the mainframe being separated by a vertical distance D6, D6 being less than about 1.5 times D5.

20. (Cancelled)

21. (Previously presented) The compact tool carrier as set forth in claim 1 further comprising a tool attached to the loader, the tool being selected from the group consisting of a bucket, auger, fork, stump grinder, tiller and roller.

22. (Previously presented) The compact tool carrier as set forth in claim 14 further comprising a tool attached to the loader, the tool being selected from the group consisting of a bucket, auger, fork, stump grinder, tiller and roller.

23. (New) The compact tool carrier as set forth in claim 1 wherein a single linkage is attached to the first side of the mainframe and pivotally attached to the loader arm.

IN THE UNITED STATES PATENT AND TRADEMARK OFFICE

Application of: Brad Thomas Art Unit: 3652
Serial No.: 14/691,649
Filed On: April 21, 2015
Confirmation No.: 7913
For: LOW PROFILE COMPACT TOOL CARRIERS
Examiner: Dean J. Kramer

December 3, 2015

AMENDMENT B

TO THE COMMISSIONER FOR PATENTS,

SIR:

In response to the final Office Action dated October 23, 2015, please enter the following amendments and consider the following remarks:

Amendments to the Claims are reflected in the Listing of Clams which begins on page 2; and

Remarks begin on page 8.

AMENDMENTS TO THE CLAIMS

The following listing of claims will replace all prior versions and listings of claims in the application.

Listing of Claims

1. (Previously presented) A compact tool carrier configured for standing or walk-behind operator control and having a mass of less than about 1500 kg, the compact tool carrier comprising:

a loader having an arm, the loader being adapted to carry a tool;

a mainframe for supporting the loader, the mainframe having a first side and a second side, the loader arm not being directly attached to the mainframe;

a linkage pivotally attached to the first side of the mainframe and pivotally attached to the loader arm;

an actuator pivotally attached to the first side of the mainframe and pivotally attached to the loader arm; and

a control station having operator controls for propelling the compact tool carrier forward and for raising and lowering the loader, the control station being configured for remote operation or being mounted toward the rear of the compact tool carrier and adapted to allow for standing or walk-behind operation.

2. (Cancelled)

3. (Currently amended) The compact tool carrier as set forth in claim **1** **[[2]]** wherein the mainframe incorporates a single weldment.

4. (Previously presented) The compact tool carrier as set forth in claim 1 wherein the loader arm is a first loader arm and the linkage is a first linkage, the loader comprising a second loader arm and the compact tool carrier comprising a second linkage pivotally attached to the second side of the mainframe and pivotally attached to the second loader arm.

5. (Previously presented) The compact tool carrier as set forth in claim 4 wherein the actuator is a first actuator, the compact tool carrier comprising a second actuator, the second actuator being pivotally attached to the second side of the mainframe and pivotally attached to the second loader arm.

6. (Previously presented) The compact tool carrier as set forth in claim 1 comprising a drive mechanism comprising tracks or wheels, the drive mechanism being attached to the mainframe.

7. (Previously presented) The compact tool carrier as set forth in claim 1 comprising an engine to propel a drive mechanism, the engine being attached to the mainframe.

8. (Original) The compact tool carrier as set forth in claim 1 wherein the actuator is a hydraulic cylinder.

9. (Original) The compact tool carrier as set forth in claim 1 wherein each loader arm incorporates a single weldment.

10. (Original) The compact tool carrier as set forth in claim 1 wherein the control station is mounted toward the rear of the compact tool carrier, the compact tool carrier comprising an operator platform for standing operation of the compact tool carrier, the difference between the height of the control station and the height of the platform being at least 90 cm.

11. (Original) The compact tool carrier as set forth in claim 1 wherein the control station is mounted toward the rear of the compact tool carrier, and the height of the control station from a surface supporting the compact tool carrier is at least 90 cm.

12. (Original) A method for operating the compact tool carrier as set forth in claim 1, the method comprising standing behind the compact tool carrier and operating the control station to propel the compact tool carrier forward and/or raise or lower the loader.

13. (Original) The method as set forth in claim 12 wherein the control station is operated while standing on an operator platform or while standing on a surface supporting the compact tool carrier.

14. (Previously presented) A compact tool carrier comprising:

a loader adapted to carry a tool;

a mainframe for supporting the loader, the mainframe having a first side and a second side, each side having a top

and a bottom, the first side of the mainframe having at least two pivot points relative to the loader, the loader not being directly attached to the mainframe;

a linkage pivotally attached to the first side of the mainframe at a pivot point and pivotally attached to the loader;

an actuator pivotally attached to the first side of the mainframe at a pivot point and pivotally attached to the loader;

a drive mechanism comprising tracks or wheels for propelling the compact tool carrier over a supporting surface, the drive mechanism being attached to the mainframe about a rotational axis, the compact tool carrier having a bottom at which the drive mechanism contacts the supporting surface, the rotational axis and bottom of the compact tool carrier being separated by a vertical distance D1, the rotational axis and each pivot point being separated by a vertical distance, each vertical distance between the rotational axis and a pivot point being less than 1.5 times D1; and

a control station having operator controls for propelling the compact tool carrier forward and for raising and/or lowering the loader, the control station being mounted toward the rear of the compact tool carrier and adapted to allow for standing or walk-behind operation.

15. (Cancelled)

16. (Previously presented) The compact tool carrier as set forth in claim 14 wherein the rotational axis and the

pivot point at which the linkage is attached are separated by a vertical distance D2, the rotational axis and the pivot point at which the actuator is attached are separated by a vertical distance D3, both D2 and D3 being less than 1.5 times D1.

17. (Original) The compact tool carrier as set forth in claim 16 wherein the second side of the mainframe comprises two pivot points, each vertical distance between the rotational axis and a pivot point being less than 1.5 times D1.

18. (Original) The compact tool carrier as set forth in claim 16 wherein the rotational axis and the bottom of the first side of the mainframe are separated by a vertical distance D5, both D2 and D3 being less than twice D5.

19. (Original) The compact tool carrier as set forth in claim 18 wherein the first side of the mainframe comprises a top most pivot point, the top most pivot point and the top of the first side of the mainframe being separated by a vertical distance D6, D6 being less than about 1.5 times D5.

20. (Cancelled)

21. (Previously presented) The compact tool carrier as set forth in claim 1 further comprising a tool attached to the loader, the tool being selected from the group consisting of a bucket, auger, fork, stump grinder, tiller and roller.

22. (Previously presented) The compact tool carrier as set forth in claim 14 further comprising a tool attached to the loader, the tool being selected from the group consisting of a bucket, auger, fork, stump grinder, tiller and roller.

23. (New) The compact tool carrier as set forth in claim 1 wherein a single linkage is attached to the first side of the mainframe and pivotally attached to the loader arm.

REMARKS

Applicant respectfully requests reconsideration and allowance of all pending claims.

Status of the Claims

Applicant has amended claim 3 and added claim 23. Claims 1, 3-14, 16-19 and 21-23 will be pending upon entry of this Amendment B.

Rejections under 35 U.S.C. §112(b)

The Office has rejected claim 3 under 35 U.S.C. §112(b) for being indefinite as claim 3 depends from cancelled claim 2. Applicant has amended claim 3 by changing its dependency from claim 2 to claim 1, thereby obviating the rejection of the Office.

Rejections under 35 U.S.C. §103

The Office has rejected claims 1, 3-9, 11, 12, 14, 16-19, 21 and 22 under 35 U.S.C. §103 as being obvious over U.S. Patent No. 8,821,104 to Yasuda et al. ("Yasuda") in view of U.S. Patent No. 6,695,568 to Bares et al. ("Bares"). Claims 10 and 13 are rejected under 35 U.S.C. §103 as being obvious over Yasuda in view of Bares and in further view of U.S. Pat. Pub. No. 2009/0116943 to Valere ("Valere"). Applicant submits that the pending claims are patentable over the cited references for the reasons set forth below.

Independent claims 1 and 14 are directed to compact tool carriers. The compact tool carrier of claim 1 includes an

advantageous loader arrangement in which the loader arm is not directly attached to the mainframe and includes a linkage and actuator that are both pivotally attached to the first side of the mainframe and pivotally attached to the loader arm. The compact tool carrier of independent claim 14, in part, advantageously requires the distances between the pivot points of the linkage and actuator and the rotational axis at which a drive mechanism is attached to the mainframe to be less than 1.5 times the distance between the rotational axis and the bottom of the compact tool carrier.

The compact tool carriers of independent claims 1 and 14 are not obvious over Yasuda with or without resort to Bares. The Office's basis for obviousness of the pending claims is that the compact tool carrier of Bares is "substantially similar" to the Yasuda device (see page 3 of the Office action). Applicant submits that the machines of Bares and Yasuda are not "substantially similar" and one of skill in the art would not use the loading mechanism of a standard skid loader as in Yasuda in a compact tool carrier apparatus as disclosed by Bares.

Compact tool carriers such as the compact tool carriers of Bares and of independent claims 1 and 14 are significantly different than standard skid loaders such as the loader of Yasuda. In fact, compact tool carriers are recognized by those of skill in the art to be a completely separate category of machine. Indeed, the International Organization for Standardization (ISO) has assigned Compact Tool Carriers to a distinct class of earth moving machines (See ISO 6165 (2012) entitled "Earth-moving Machinery – Basic Types – Identification and Terms and Definitions"). Further, both the Society of

Automotive Engineers (SAE) and International Organization for Standardization (ISO) has assigned compact tool carriers to separate design standards such as standards for personal protection (see SAE J2752 entitled "Personal Protection – Compact Tool Carriers" and ISO/NP 20474-15 entitled "Earth-moving machinery – Safety – Part 15: Requirement of Compact Tool Carriers")[1].

As stated in these standards, compact tool carriers are "a self-propelled crawler or wheeled machine having an operating mass of less than 1500 kg with a rigid frame, having either a pedestrian operating position or a standing operator platform at the rear of the machine and either front-mounted interchangeable equipment or lift arms with an attachment bracket capable of coupling to interchangeable, front-mounted attachments." Compact tool carriers are so small (less than 1500 kg) that they are less than a third of the weight of what is referred to in the art as a "compact machine" for moving material (defined as 4500 kg or less in ISO 6165 (2012)).

The significance of the difference between standard loaders and compact tool carriers is also recognized by Bares itself which is cited by the Office. Bares indicates the importance of allowing the operator to be at the rear of the loader and maneuverability of the device in small areas:

[1] Please advise if you would like a courtesy copy of ISO 6165:2012 (propriety), SAE J2752 (propriety) or ISO/NP 20474-15 (propriety). These references are considered to be favorable toward patentability of the pending claims.

> The present invention relates to a small loader that is manually operated by a standing operator at the rear of the loader. The loader has a low lift arm profile, so that an operator standing at the rear of the loader can see the work area. The low profile lift arms aid side-to-side visibility.
>
> Various small self-propelled loaders have been advanced, where an **operator will either stand or walk on the ground behind the loader or stand on a platform on the loader frame to manipulate the work element** that is attached to the forward ends of pivoting lift arms.
>
> These loaders find utility in **small load applications**, where loads that are too heavy for a person to lift can be hoisted. The ability of the loaders to be **operated in small areas** is important. Ease of manipulation of the bucket or work tool, as well as the ability to see the work that is being carried out is also important. (col. 1, lines 6-22; emphasis added)

One of skill in the art would not resort to conversion of a standard size loader, as per Yasuda, into a compact skid steer, like Bares, or, alternatively, modify the compact skid steer of Bares to include a loading mechanism such as that provided with Yasuda due to the variations in the weight, complexity, size, and intended use of each of these apparatus types (see paragraph [0004] of the application.

It is worth considering the construction of Yasuda as a compact machine, complete with a cabin for the operator. Yasuda (col. 7, lines 22-27) sets forth for a "driving part 5" that "is provided above the body frame 1, with a driver's seat 63 …, control levers etc. mounted thereon. On a front portion of the body frame 1, a cabin (driver protector) 4 surrounding the driving part 5 is mounted. …" One of the principles of operation of Yasuda et al., thus, is to have the driver's seat 63 and the control levers to be located with the driving part 5 and for the driving part 5 to be surrounded by the "cabin (driver protector) 4". Therefore, moving the control levers of Yasuda to the back of the machine and, accordingly, outside the protection offered by the cabin 4 would constitute a change in principle of operation (MPEP 2143.01(VI)) of Yasuda, thus pointing to the non-obviousness of the proposed modification.

Applicant also submits that one of skill in the art would not resort to conversion of the particular loading apparatus of Yasuda into a compact tool carrier or, alternatively, using the loading mechanism thereof with a compact tool carrier. Compact tool carriers may be characterized by an already relatively high center of gravity, particularly during loading. Those of skill in the art would consider the vertical lift profile of the loader of Yasuda to <u>raise</u> the center of gravity of the compact tool carrier when the loader is raised, which would <u>increase the likelihood of the tool carrier to tip.</u> The general weight distribution in a standard carrier such as that of Yasuda can accommodate a higher lift profile that might otherwise pose a concern in a lighter weight compact tool carrier like that of Bares. Applicant found that such design obstacles could be

overcome by using a loader with linkages and actuators with relatively low pivot points relative to the mainframe (see, for example, paragraphs [0030] and [0034]; and claims 14 and 18 in which features related to the low-profile nature of the loader are provided).

For sake of argument, even if Bares were made to be the primary reference and Yasuda the secondary reference, Applicant notes that Bares would still teach away from use of the loading arrangement of Yasuda. Bares teaches that the pivot points of the loader relative to the mainframe should be as high as possible:

> While it is desirable to have the pivot points for the boom near the rear of the small loader, **and relatively high so that the reach is adequate for operation**, conventional, straight lift arms tend to block vision to the side, as they are raised. (col. 1, lines 23-26; emphasis added)
>
> * * * * *
>
> The lift arms are **pivoted at the uppermost**, rear portion of the frame, and extend forwardly to support a bucket, or other work implement at the forward ends of the arms. Hydraulic actuators are utilized for raising and lowering the lift arms, in a normal manner. (col. 1, lines 42-44; emphasis added)

Clearly, between the above passage and the illustrated embodiment (e.g., Figs. 2 & 3), Bares teaches toward having higher pivot points (including the advantages thereof) and,

thus, teaches away from its modification to use a loader assembly in which the pivot points are positioned lower on the frame, as in Yasuda (Fig. 1; first link shaft 85). A prior art reference must be considered in its entirety, i.e., as a whole, including portions that would lead away from the claimed invention. MPEP §2141.02. A prior art reference that "teaches away" from the claimed invention is a significant factor to be considered in determining obviousness. MPEP §2145(X)(D)(1).

For at least these reasons independent claims 1 and 14 and claims 3-13, 16-19 and 21-23 depending therefrom are patentable over Yasuda in view of Bares. In regard to Valere which is cited by the Office to reject several of the dependent claims, Valere does not cure the deficiencies noted above relating to Yasuda and Bares.

Applicant respectfully requests allowance of this application. While no fees are believed to be due, Applicant authorizes the Commissioner to charge any fees due in connection with this Amendment B, to Deposit Account No. 012384 in the name of Armstrong Teasdale LLP.

Respectfully submitted,

/Michael J. Vander Molen/

Michael J. Vander Molen
Reg. No. 57,274
Armstrong Teasdale, LLP
7700 Forsyth Blvd, Suite 1800
St. Louis, Missouri 63105
(314) 621-5070

MJV/dlb

UNITED STATES PATENT AND TRADEMARK OFFICE

UNITED STATES DEPARTMENT OF COMMERCE
United States Patent and Trademark Office
Address: COMMISSIONER FOR PATENTS
P.O. Box 1450
Alexandria, Virginia 22313-1450
www.uspto.gov

APPLICATION NO.	FILING DATE	FIRST NAMED INVENTOR	ATTORNEY DOCKET NO.	CONFIRMATION NO.
14/691,649	04/21/2015	Brad Thomas	31681-31	7913

76656 7590 10/23/2015
Patent Docket Department
Armstrong Teasdale LLP
7700 Forsyth Boulevard
Suite 1800
St. Louis, MO 63105

EXAMINER
KRAMER, DEAN J

ART UNIT	PAPER NUMBER
3652	

NOTIFICATION DATE	DELIVERY MODE
10/23/2015	ELECTRONIC

Please find below and/or attached an Office communication concerning this application or proceeding.

The time period for reply, if any, is set in the attached communication.

Notice of the Office communication was sent electronically on above-indicated "Notification Date" to the following e-mail address(es):

USpatents@armstrongteasdale.com

PTOL-90A (Rev. 04/07)

Office Action Summary	Application No. 14/691,649	Applicant(s) THOMAS ET AL.	
	Examiner DEAN KRAMER	Art Unit 3652	AIA (First Inventor to File) Status Yes

-- The MAILING DATE of this communication appears on the cover sheet with the correspondence address --

Period for Reply

A SHORTENED STATUTORY PERIOD FOR REPLY IS SET TO EXPIRE 3 MONTHS FROM THE MAILING DATE OF THIS COMMUNICATION.

- Extensions of time may be available under the provisions of 37 CFR 1.136(a). In no event, however, may a reply be timely filed after SIX (6) MONTHS from the mailing date of this communication.
- If NO period for reply is specified above, the maximum statutory period will apply and will expire SIX (6) MONTHS from the mailing date of this communication.
- Failure to reply within the set or extended period for reply will, by statute, cause the application to become ABANDONED (35 U.S.C. § 133). Any reply received by the Office later than three months after the mailing date of this communication, even if timely filed, may reduce any earned patent term adjustment. See 37 CFR 1.704(b).

Status

1)☒ Responsive to communication(s) filed on 10/12/15.

☐ A declaration(s)/affidavit(s) under **37 CFR 1.130(b)** was/were filed on _____.

2a)☒ This action is **FINAL**. 2b)☐ This action is non-final.

3)☐ An election was made by the applicant in response to a restriction requirement set forth during the interview on _____; the restriction requirement and election have been incorporated into this action.

4)☐ Since this application is in condition for allowance except for formal matters, prosecution as to the merits is closed in accordance with the practice under *Ex parte Quayle*, 1935 C.D. 11, 453 O.G. 213.

Disposition of Claims*

5)☒ Claim(s) 1,3-14,16-19,21 and 22 is/are pending in the application.

5a) Of the above claim(s) _____ is/are withdrawn from consideration.

6)☐ Claim(s) _____ is/are allowed.

7)☒ Claim(s) 1,3-14,16-19,21 and 22 is/are rejected.

8)☐ Claim(s) _____ is/are objected to.

9)☐ Claim(s) _____ are subject to restriction and/or election requirement.

* If any claims have been determined allowable, you may be eligible to benefit from the **Patent Prosecution Highway** program at a participating intellectual property office for the corresponding application. For more information, please see http://www.uspto.gov/patents/init_events/pph/index.jsp or send an inquiry to PPHfeedback@uspto.gov.

Application Papers

10)☐ The specification is objected to by the Examiner.

11)☐ The drawing(s) filed on _____ is/are: a)☐ accepted or b)☐ objected to by the Examiner.

Applicant may not request that any objection to the drawing(s) be held in abeyance. See 37 CFR 1.85(a).

Replacement drawing sheet(s) including the correction is required if the drawing(s) is objected to. See 37 CFR 1.121(d).

Priority under 35 U.S.C. § 119

12)☐ Acknowledgment is made of a claim for foreign priority under 35 U.S.C. § 119(a)-(d) or (f).

Certified copies:

a)☐ All b)☐ Some** c)☐ None of the:

1.☐ Certified copies of the priority documents have been received.

2.☐ Certified copies of the priority documents have been received in Application No. _____.

3.☐ Copies of the certified copies of the priority documents have been received in this National Stage application from the International Bureau (PCT Rule 17.2(a)).

** See the attached detailed Office action for a list of the certified copies not received.

Attachment(s)

1) ☐ Notice of References Cited (PTO-892)

2) ☐ Information Disclosure Statement(s) (PTO/SB/08a and/or PTO/SB/08b) Paper No(s)/Mail Date _____.

3) ☐ Interview Summary (PTO-413) Paper No(s)/Mail Date. _____ .

4) ☐ Other: _____.

DETAILED ACTION

The amendment filed October 12, 2015 and the remarks presented therewith have been carefully considered. However, they are not deemed to be fully persuasive. The present application, filed on or after March 16, 2013, is being examined under the first inventor to file provisions of the AIA.

Claim Rejections - 35 USC § 112

1. The following is a quotation of 35 U.S.C. 112(b):

> (b) CONCLUSION.—The specification shall conclude with one or more claims particularly pointing out and distinctly claiming the subject matter which the inventor or a joint inventor regards as the invention.

The following is a quotation of 35 U.S.C. 112 (pre-AIA), second paragraph:

> The specification shall conclude with one or more claims particularly pointing out and distinctly claiming the subject matter which the applicant regards as his invention.

2. Claim 3 is rejected under 35 U.S.C. 112(b) or 35 U.S.C. 112 (pre-AIA), second paragraph, as being indefinite for failing to particularly point out and distinctly claim the subject matter which the inventor or a joint inventor, or for pre-AIA the applicant regards as the invention.

Claim 3 improperly depends from cancelled claim 2.

Claim Rejections - 35 USC § 103

3. In the event the determination of the status of the application as subject to AIA 35 U.S.C. 102 and 103 (or as subject to pre-AIA 35 U.S.C. 102 and 103) is incorrect, any correction of the statutory basis for the rejection will not be considered a new ground of rejection if the prior art relied upon, and the rationale supporting the rejection, would be the same under either status.

4. The following is a quotation of 35 U.S.C. 103 which forms the basis for all obviousness rejections set forth in this Office action:

> A patent for a claimed invention may not be obtained, notwithstanding that the claimed invention is not identically disclosed as set forth in section 102 of this title, if the differences between the claimed invention and the prior art are such that the claimed invention as a whole would have been obvious before the effective filing date of the claimed invention to a person having ordinary skill in the art to which the claimed invention pertains. Patentability shall not be negated by the manner in which the invention was made.

5. Claims 1, 3-9, 11, 12, 14, 16-19, 21, and 22, as understood, are rejected under 35 U.S.C. 103 as being unpatentable over Yasuda et al. (8,821,104) in view of Bares et al. (6,695,568).

The patent to Yasuda et al. shows a compact tool carrier comprising a loader (2,77,78), a mainframe (1), a drive wheel (69) attached to the mainframe about a rotational axis (71), an actuator (79) pivoted to the mainframe at point (91), and linkage (81,82) pivoted to the mainframe at points (85,86). The Yasuda et al. loader arms (77) are not directly attached to the mainframe. The Yasuda et al. carrier does not show its control station mounted to the rear of the mainframe for walk-behind operation as is called for in the above claims.

However, the patent to Bares et al. shows a low profile carrier substantially similar to the Yasuda et al. device, but the Bares et al. carrier includes a control station (20) at the rear portion of its mainframe for allowing an operator to walk behind during use.

It would have been obvious to one of ordinary skill in the art before the effective filing date of the claimed invention to form a control station at the rear of the Yasuda et al. carrier, similar to that shown in the Bares et al. patent, so that an operator could walk

behind the resulting vehicle while controlling its movement. This rear-mounted control station would result in a more compact and lighter weight assembly (e.g. having a mass less than 1500 kg.) enabling better maneuverability over certain terrain and in congested spaces.

Regarding claims 3 and 9, it would have been a matter of obvious engineering design choice to form the mainframe or loader arms as a one-piece construction. *In re Larson*, 340 F.2d 965, 968, 144 USPQ 347, 349(CCPA 1965) (A claim to a fluid transporting vehicle was rejected as obvious over a prior art reference which differed from the prior art in claiming a brake drum integral with a clamping means, whereas the brake disc and clamp of the prior art comprise several parts rigidly secured together as a single unit. The court affirmed the rejection holding, among other reasons, "that the use of a one piece construction instead of the structure disclosed in [the prior art] would be merely a matter of obvious engineering choice.")

In regard to claims 21 and 22, the Yasuda et al. patent discloses a bucket (78a) attached to its loader arm assembly.

6. Claims 10 and 13 are rejected under 35 U.S.C. 103 as being unpatentable over Yasuda et al. in view of Bares et al. as applied to claims 1, 3-9, 11, 12, 14, 16-19, 21, and 22 above, and further in view of Valere (2009/0116943).

Valere shows a compact tool carrier having a platform (4) mounted at the rear of the carrier on which a user can stand during operation.

It would have been obvious to a person having ordinary skill in the art to mount a platform below the control station of the modified Yasuda et al. device, as was presented above in section 5, similar to that shown in the Valere publication so that an operator would not have to laboriously walk behind the carrier during use.

Conclusion

7. Applicant's amendment necessitated the new ground(s) of rejection presented in this Office action. Accordingly, **THIS ACTION IS MADE FINAL**. See MPEP § 706.07(a). Applicant is reminded of the extension of time policy as set forth in 37 CFR 1.136(a).

A shortened statutory period for reply to this final action is set to expire THREE MONTHS from the mailing date of this action. In the event a first reply is filed within TWO MONTHS of the mailing date of this final action and the advisory action is not mailed until after the end of the THREE-MONTH shortened statutory period, then the shortened statutory period will expire on the date the advisory action is mailed, and any extension fee pursuant to 37 CFR 1.136(a) will be calculated from the mailing date of the advisory action. In no event, however, will the statutory period for reply expire later than SIX MONTHS from the date of this final action.

Any inquiry concerning this communication or earlier communications from the examiner should be directed to DEAN KRAMER whose telephone number is (571)272-6926. The examiner can normally be reached on Monday-Friday.

If attempts to reach the examiner by telephone are unsuccessful, the examiner's supervisor, Saul Rodriguez can be reached on (571) 272-7097. The fax phone number for the organization where this application or proceeding is assigned is 571-273-8300.

Information regarding the status of an application may be obtained from the Patent Application Information Retrieval (PAIR) system. Status information for published applications may be obtained from either Private PAIR or Public PAIR. Status information for unpublished applications is available through Private PAIR only. For more information about the PAIR system, see http://pair-direct.uspto.gov. Should you have questions on access to the Private PAIR system, contact the Electronic Business Center (EBC) at 866-217-9197 (toll-free). If you would like assistance from a USPTO Customer Service Representative or access to the automated information system, call 800-786-9199 (IN USA OR CANADA) or 571-272-1000.

/DEAN KRAMER/
Primary Examiner, Art Unit 3652

Djk
10/16/15

IN THE UNITED STATES PATENT AND TRADEMARK OFFICE

Application of: Brad Thomas Art Unit: 3652
Serial No.: 14/691,649
Filed On: April 21, 2015
Confirmation No.: 7913
For: LOW PROFILE COMPACT TOOL CARRIERS
Examiner: Dean J. Kramer

October 12, 2015

AMENDMENT A

TO THE COMMISSIONER FOR PATENTS,

SIR:

In response to the non-final Office Action dated September 1, 2015, please enter the following amendments and consider the following remarks:

Amendments to the Claims are reflected in the Listing of Clams which begins on page 2;

Amendments to the Specification begin on page 8; and

Remarks begin on page 9.

AMENDMENTS TO THE CLAIMS

The following listing of claims will replace all prior versions and listings of claims in the application.

Listing of Claims

1. (Currently amended) A compact tool carrier configured for standing or walk-behind operator control and having a mass of less than about 1500 kg, the compact tool carrier comprising:

a loader having an arm**, the loader being adapted to carry a tool**;

a mainframe for supporting the loader, the mainframe having a first side and a second side, the loader arm not being directly attached to the mainframe;

a linkage **pivotally attached to the first side of the mainframe and** pivotally attached to the loader arm;

an actuator **pivotally attached to the first side of the mainframe and** pivotally attached to the loader arm; and

a control station having operator controls for propelling the compact tool carrier forward and for raising and lowering the loader, the control station being configured for remote operation or being mounted toward the rear of the compact tool carrier and adapted to allow for standing or walk-behind operation.

2. (Cancelled)

3. (Currently amended) The compact tool carrier as set forth in **claim** 2 wherein the mainframe incorporates a single weldment.

4. (Currently amended) The compact tool carrier as set forth in claim **1** **[[2]]** wherein the loader arm is a first loader arm and the linkage is a first linkage, the loader comprising a second loader arm and the compact tool carrier comprising a second linkage pivotally attached to the second **side** ~~end~~ of the mainframe and pivotally attached to the second loader arm.

5. (Currently amended) The compact tool carrier as set forth in claim 4 wherein the actuator is a first actuator, the compact tool carrier comprising a second actuator, the second actuator being pivotally attached to the second **side** ~~end~~ of the mainframe and pivotally attached to the second loader arm.

6. (Currently amended) The compact tool carrier as set forth in claim **1** **[[2]]** comprising a drive mechanism comprising tracks or wheels, the drive mechanism being attached to the mainframe.

7. (Currently amended) The compact tool carrier as set forth in claim **1** **[[2]]** comprising an engine to propel a drive mechanism, the engine being attached to the mainframe.

8. (Original) The compact tool carrier as set forth in claim 1 wherein the actuator is a hydraulic cylinder.

9. (Original) The compact tool carrier as set forth in claim 1 wherein each loader arm incorporates a single weldment.

10. (Original) The compact tool carrier as set forth in claim 1 wherein the control station is mounted toward the rear of the compact tool carrier, the compact tool carrier comprising an operator platform for standing operation of the compact tool carrier, the difference between the height of the control station and the height of the platform being at least 90 cm.

11. (Original) The compact tool carrier as set forth in claim 1 wherein the control station is mounted toward the rear of the compact tool carrier, and the height of the control station from a surface supporting the compact tool carrier is at least 90 cm.

12. (Original) A method for operating the compact tool carrier as set forth in claim 1, the method comprising standing behind the compact tool carrier and operating the control station to propel the compact tool carrier forward and/or raise or lower the loader.

13. (Original) The method as set forth in claim 12 wherein the control station is operated while standing on an operator platform or while standing on a surface supporting the compact tool carrier.

14. (Currently amended) A compact tool carrier comprising:

a loader **adapted to carry a tool**;

a mainframe for supporting the loader, the mainframe having a first side and a second side, each side having a top and a bottom, the first side of the mainframe having at least two pivot points relative to the loader**, the loader not being directly attached to the mainframe**; **[[and]]**

a linkage pivotally attached to the first side of the mainframe at a pivot point and pivotally attached to the loader;

an actuator pivotally attached to the first side of the mainframe at a pivot point and pivotally attached to the loader;

a drive mechanism comprising tracks or wheels for propelling the **compact tool carrier ~~apparatus~~** over a supporting surface, the drive mechanism being attached to the mainframe about a rotational axis, the compact tool carrier having a bottom at which the drive mechanism contacts the supporting surface, the rotational axis and bottom of the compact tool carrier being separated by a vertical distance D1, the rotational axis and each pivot point being separated by a vertical distance, each vertical distance between the rotational axis and a pivot point being less than 1.5 times D1**; and**

a control station having operator controls for propelling the compact tool carrier forward and for raising and/or lowering the loader, the control station being mounted toward the rear of the compact tool carrier and adapted to allow for standing or walk-behind operation.

15. (Cancelled)

16. (Currently amended) The compact tool carrier as set forth in claim **14 wherein** **[[15]]** ~~**comprising a linkage pivotally attached to the mainframe at one of the pivot points and being pivotally attached to the loader, the mainframe comprising a pivot point at which the linkage is attached and a pivot point at which the actuator is attached,**~~ the rotational axis and the pivot point at which the linkage is attached **are** **[[being]]** separated by a vertical distance D2, the rotational axis and the pivot point at which the actuator is attached **are** **[[being]]** separated by a vertical distance D3, both D2 and D3 being less than 1.5 times D1.

17. (Original) The compact tool carrier as set forth in claim 16 wherein the second side of the mainframe comprises two pivot points, each vertical distance between the rotational axis and a pivot point being less than 1.5 times D1.

18. (Original) The compact tool carrier as set forth in claim 16 wherein the rotational axis and the bottom of the first side of the mainframe are separated by a vertical distance D5, both D2 and D3 being less than twice D5.

19. (Original) The compact tool carrier as set forth in claim 18 wherein the first side of the mainframe comprises a top most pivot point, the top most pivot point and the top of the first side of the mainframe being separated by a vertical distance D6, D6 being less than about 1.5 times D5.

20. (Cancelled)

21. (New) The compact tool carrier as set forth in claim 1 further comprising a tool attached to the loader, the

tool being selected from the group consisting of a bucket, auger, fork, stump grinder, tiller and roller.

22. (New) The compact tool carrier as set forth in claim 14 further comprising a tool attached to the loader, the tool being selected from the group consisting of a bucket, auger, fork, stump grinder, tiller and roller.

AMENDMENTS TO THE SPECIFICATION

Please replace the abstract of the application with the following rewritten abstract:

ABSTRACT

Compact tool carriers having a loader mounted to a low-profile mainframe are disclosed. In some embodiments, the pivot points of the mainframe about which the loader is pivoted are low relative to the mainframe to reduce the mainframe size **and to lower the center of gravity to improve the stability of the compact tool carrier during use.**

* * * * * * *

Please replace paragraph [0025] of the application with the following rewritten paragraph:

[0025] The mainframe 10 includes a first side 38a and a second side 38b generally opposite the first side 38a. As used herein, the term "mainframe" generally refers to a single weldment to which the loader 8 is attached, optionally through one or more pivotal linkages. The mainframe 10 includes bracket portions 40a, 40b (Fig. 4) through which various pivot linkages are attached. In the illustrated embodiment, the engine (not shown) and the drive mechanism **18** **[[10]]** comprising tracks or wheels are directly connected to the mainframe 10.

REMARKS

Applicant respectfully requests reconsideration and allowance of all pending claims.

Status of the Claims

Applicant has amended claims 1, 3-5, 6-7, 14 and 16 and added claims 21 and 22. Claims 2, 15 and 20 are cancelled. Claims 1, 3-14, 16-19 and 21-22 will be pending upon entry of this Amendment A.

Interview Summary

The undersigned attorney of record thanks the Examiner for the courteous telephone interview of September 25. The Examiner, the undersigned attorney and Jeff Knapp (Reg. No. 45,384), agent for Applicant, took part in the interview. The pending claims and prior art of record (e.g., Yasuda, Green) were discussed. Potential amendments that would overcome the outstanding rejections were also discussed. The Examiner indicated that the present amendment to claim 1 may overcome the outstanding rejections under 35 U.S.C. §103(a); however, an additional prior art search would be performed. Applicant agreed to present the amendment and further arguments in a response for consideration by the Examiner.

Objection to the Specification

Applicant has amended the abstract to be at least 50 words in length as requested by the Office. Applicant has also changed reference number "10" to "18" as requested by the Office.

Claim Objections

Applicant has amended claim 3 by including the term "claim" as requested by the Office.

Rejections under 35 U.S.C. §112, Second Paragraph

Applicant has amended claim 14 to refer to the "compact tool carrier" and has removed the term "apparatus," thereby obviating the rejection of the Office.

Rejections under 35 U.S.C. §102(a)(1)

The Office has rejected claims 14-19 under 35 U.S.C. §102(a)(1) as being anticipated by U.S. Patent No. 8,821,104 to Yasuda et al. ("Yasuda"). Claims 14-16 and 18-20 are rejected under 35 U.S.C. §102(a)(1) as being anticipated by U.S. Patent No. 7,695,236 to Green ("Green").

Yasuda

Independent claim 14 is directed to a compact tool carrier. The claim has been amended by incorporating the requirement of claim 20 that the compact tool carrier include a control station having operator controls for propelling the compact tool carrier forward and for raising and/or lowering the loader. The control station is mounted toward the rear of the compact tool carrier and is adapted to allow for standing or walk-behind operation. In view that the recitations of claim 20 have been incorporated into independent claim 14 and that the Office indicated that claim 20 is novel of Yasuda, the rejection should be withdrawn.

Green

Independent claim 14 has been amended to recite, in part, that the loader be adapted to carry a tool and that the loader is not directly attached to the mainframe. In addition, the claim has been amended to include:

- a linkage pivotally attached to the first side of the mainframe at a pivot point, the linkage being pivotally attached to the loader; and

- an actuator pivotally attached to the first side of the mainframe at a pivot point, the actuator being pivotally attached to the loader.

The Office references Figure 8 of Green, reproduced below, in support of the anticipation rejection.

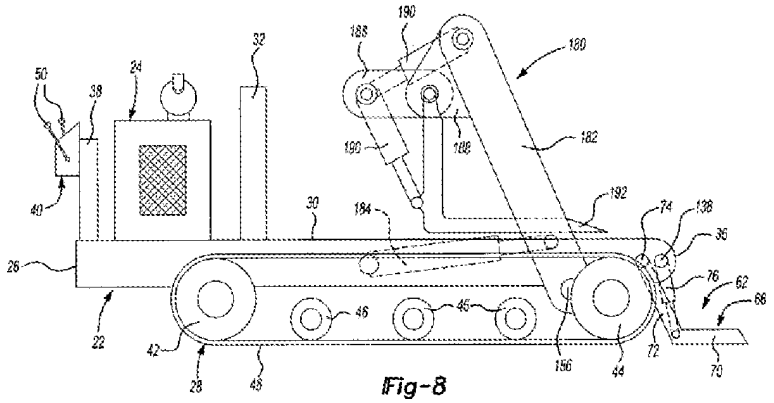

Fig. 8 of Greene

The Office considers the fork member 192 to be the equivalent of the loader of independent claim 14. However, claim 14 has been amended to indicate that the loader be adapted to carry a tool. Under the Office's interpretation, the loader would be the tool

itself (i.e., the fork), not the structure used to carry the tool.

As shown in Figure 8, the fork 192 is carried by link member 188. The link member 188 cannot be the loader of claim 14 as the link member 188 is not pivotally attached to a linkage and to an actuator that are both in turn pivotally attached to the mainframe.

Cylinder 184 of the embodiment of Figure 8 is attached to the frame 22 to pivot the arm member 182. The cylinder 184 cannot be the equivalent of the claimed actuator as Green does not indicate that the cylinder 184 is "pivotally attached" to the frame 22. Further, the cylinder 184 is attached to the arm member 182 which cannot be the claimed loader, as the arm member is attached to the frame 22. Claim 14 expressly states that the loader is not directly attached to the mainframe.

Applicant respectfully submits that the anticipation rejection must be withdrawn. The MPEP and the case law make clear that to anticipate a claim, a single reference must contain all of the elements of the claim. MPEP §2131. As Green does not disclose a compact tool carrier having a loader adapted to carry a tool and not attached to the mainframe and does not disclose a linkage and actuator that are both pivotally attached to the loader and to the mainframe, independent claim 14 is novel over Green.

Claims 16-19 incorporate the elements of independent claim 14 by way of their claim dependency from claim 14 and are novel over Green for the reasons set forth above.

Rejections under 35 U.S.C. §103

The Office has rejected claims 1-13 and 17 under 35 U.S.C. §103 as being obvious over Green in view of U.S. Patent Pub. No. 2009/0116943 to Valere ("Valere"). Applicant submits that the pending claims are patentable over the cited references for the reasons set forth below.

Independent claim 1 has been amended to include a mainframe and to require that the linkage and actuator be pivotally attached to the mainframe. The loader is adapted to carry a tool and is not attached to the mainframe. The arrangement of the loader, mainframe, actuator and linkage in the compact tool carrier of independent claim 1 allows the loader to travel over a vertical path rather than a radial path which is more effective relative to conventional travel paths as the compact tool carrier may operate closer to other structures (see para. [0034]).

As stated above with regard to the rejection of claim 14 under 35 U.S.C. §102(a)(1), Green does not disclose a compact tool carrier having a loader adapted to carry a tool and not attached to the mainframe and does not disclose a linkage and actuator that are both pivotally attached to the loader and to the mainframe. Neither Green nor Valere provide any suggestion to modify the arrangement of the loader, linkage, actuator and mainframe in the apparatus of Green. Applicant submits that the independent claim 1 and claims depending therefrom are patentable over Green and Valere in view of the amendment to independent claim 1.

Applicant respectfully requests allowance of this application. While no fees are believed to be due, Applicant

authorizes the Commissioner to charge any fees due in connection with this Amendment A, to Deposit Account No. 012384 in the name of Armstrong Teasdale LLP.

Respectfully submitted,

/Michael J. Vander Molen/

Michael J. Vander Molen
Reg. No. 57,274
Armstrong Teasdale, LLP
7700 Forsyth Blvd, Suite 1800
St. Louis, Missouri 63105
(314) 621-5070

MJV/dlb

UNITED STATES PATENT AND TRADEMARK OFFICE

UNITED STATES DEPARTMENT OF COMMERCE
United States Patent and Trademark Office
Address: COMMISSIONER FOR PATENTS
P.O. Box 1450
Alexandria, Virginia 22313-1450
www.uspto.gov

APPLICATION NO.	FILING DATE	FIRST NAMED INVENTOR	ATTORNEY DOCKET NO.	CONFIRMATION NO.
14/691,649	04/21/2015	Brad Thomas	31681-31	7913

76656 7590 10/01/2015
Patent Docket Department
Armstrong Teasdale LLP
7700 Forsyth Boulevard
Suite 1800
St. Louis, MO 63105

EXAMINER
KRAMER, DEAN J

ART UNIT	PAPER NUMBER
3652	

NOTIFICATION DATE	DELIVERY MODE
10/01/2015	ELECTRONIC

Please find below and/or attached an Office communication concerning this application or proceeding.

The time period for reply, if any, is set in the attached communication.

Notice of the Office communication was sent electronically on above-indicated "Notification Date" to the following e-mail address(es):

USpatents@armstrongteasdale.com

PTOL-90A (Rev. 04/07)

Applicant-Initiated Interview Summary	Application No.	Applicant(s)	
	14/691,649	THOMAS ET AL.	
	Examiner	Art Unit	
	DEAN KRAMER	3652	

All participants (applicant, applicant's representative, PTO personnel):

(1) *DEAN KRAMER.* (3)*Jeff Knapp.*

(2) *Michael Vander Molen.* (4)_____.

Date of Interview: *25 September 2015.*

Type: ☐ Telephonic ☒ Video Conference
☐ Personal [copy given to: ☐ applicant ☐ applicant's representative]

Exhibit shown or demonstration conducted: ☐ Yes ☒ No.
If Yes, brief description: _____.

Issues Discussed ☐101 ☐112 ☒102 ☒103 ☐Others
(For each of the checked box(es) above, please describe below the issue and detailed description of the discussion)

Claim(s) discussed: *1 and 14.*

Identification of prior art discussed: *all of record (generally).*

Substance of Interview
(For each issue discussed, provide a detailed description and indicate if agreement was reached. Some topics may include: identification or clarification of a reference or a portion thereof, claim interpretation, proposed amendments, arguments of any applied references etc…)

Discussed proposed amendments to claims 1 and 14 further defining the linkage and actuator as being pivotally attached to the first side of the main frame. The examiner pointed to the Figure 8 embodiment of the Green patent (7,695,236) as a potential base reference in a 35 U.S.C. 103 rejection over such a limitation. While no specific agreement was reach as to the allowability of the claims, the examiner clarified his interpretation of the Green Figure 8 embodiment.

Applicant recordation instructions: The formal written reply to the last Office action must include the substance of the interview. (See MPEP section 713.04). If a reply to the last Office action has already been filed, applicant is given a non-extendable period of the longer of one month or thirty days from this interview date, or the mailing date of this interview summary form, whichever is later, to file a statement of the substance of the interview

Examiner recordation instructions: Examiners must summarize the substance of any interview of record. A complete and proper recordation of the substance of an interview should include the items listed in MPEP 713.04 for complete and proper recordation including the identification of the general thrust of each argument or issue discussed, a general indication of any other pertinent matters discussed regarding patentability and the general results or outcome of the interview, to include an indication as to whether or not agreement was reached on the issues raised.

☐ Attachment

/DEAN KRAMER/ Primary Examiner, Art Unit 3652	

Summary of Record of Interview Requirements

Manual of Patent Examining Procedure (MPEP), Section 713.04, Substance of Interview Must be Made of Record
A complete written statement as to the substance of any face-to-face, video conference, or telephone interview with regard to an application must be made of record in the application whether or not an agreement with the examiner was reached at the interview.

Title 37 Code of Federal Regulations (CFR) § 1.133 Interviews
Paragraph (b)

In every instance where reconsideration is requested in view of an interview with an examiner, a complete written statement of the reasons presented at the interview as warranting favorable action must be filed by the applicant. An interview does not remove the necessity for reply to Office action as specified in §§ 1.111, 1.135. (35 U.S.C. 132)

37 CFR §1.2 Business to be transacted in writing.
All business with the Patent or Trademark Office should be transacted in writing. The personal attendance of applicants or their attorneys or agents at the Patent and Trademark Office is unnecessary. The action of the Patent and Trademark Office will be based exclusively on the written record in the Office. No attention will be paid to any alleged oral promise, stipulation, or understanding in relation to which there is disagreement or doubt.

The action of the Patent and Trademark Office cannot be based exclusively on the written record in the Office if that record is itself incomplete through the failure to record the substance of interviews.

It is the responsibility of the applicant or the attorney or agent to make the substance of an interview of record in the application file, unless the examiner indicates he or she will do so. It is the examiner's responsibility to see that such a record is made and to correct material inaccuracies which bear directly on the question of patentability.

Examiners must complete an Interview Summary Form for each interview held where a matter of substance has been discussed during the interview by checking the appropriate boxes and filling in the blanks. Discussions regarding only procedural matters, directed solely to restriction requirements for which interview recordation is otherwise provided for in Section 812.01 of the Manual of Patent Examining Procedure, or pointing out typographical errors or unreadable script in Office actions or the like, are excluded from the interview recordation procedures below. Where the substance of an interview is completely recorded in an Examiners Amendment, no separate Interview Summary Record is required.

The Interview Summary Form shall be given an appropriate Paper No., placed in the right hand portion of the file, and listed on the "Contents" section of the file wrapper. In a personal interview, a duplicate of the Form is given to the applicant (or attorney or agent) at the conclusion of the interview. In the case of a telephone or video-conference interview, the copy is mailed to the applicant's correspondence address either with or prior to the next official communication. If additional correspondence from the examiner is not likely before an allowance or if other circumstances dictate, the Form should be mailed promptly after the interview rather than with the next official communication.

The Form provides for recordation of the following information:
- Application Number (Series Code and Serial Number)
- Name of applicant
- Name of examiner
- Date of interview
- Type of interview (telephonic, video-conference, or personal)
- Name of participant(s) (applicant, attorney or agent, examiner, other PTO personnel, etc.)
- An indication whether or not an exhibit was shown or a demonstration conducted
- An identification of the specific prior art discussed
- An indication whether an agreement was reached and if so, a description of the general nature of the agreement (may be by attachment of a copy of amendments or claims agreed as being allowable). Note: Agreement as to allowability is tentative and does not restrict further action by the examiner to the contrary.
- The signature of the examiner who conducted the interview (if Form is not an attachment to a signed Office action)

It is desirable that the examiner orally remind the applicant of his or her obligation to record the substance of the interview of each case. It should be noted, however, that the Interview Summary Form will not normally be considered a complete and proper recordation of the interview unless it includes, or is supplemented by the applicant or the examiner to include, all of the applicable items required below concerning the substance of the interview.

A complete and proper recordation of the substance of any interview should include at least the following applicable items:
1) A brief description of the nature of any exhibit shown or any demonstration conducted,
2) an identification of the claims discussed,
3) an identification of the specific prior art discussed,
4) an identification of the principal proposed amendments of a substantive nature discussed, unless these are already described on the Interview Summary Form completed by the Examiner,
5) a brief identification of the general thrust of the principal arguments presented to the examiner,
   (The identification of arguments need not be lengthy or elaborate. A verbatim or highly detailed description of the arguments is not required. The identification of the arguments is sufficient if the general nature or thrust of the principal arguments made to the examiner can be understood in the context of the application file. Of course, the applicant may desire to emphasize and fully describe those arguments which he or she feels were or might be persuasive to the examiner.)
6) a general indication of any other pertinent matters discussed, and
7) if appropriate, the general results or outcome of the interview unless already described in the Interview Summary Form completed by the examiner.

Examiners are expected to carefully review the applicant's record of the substance of an interview. If the record is not complete and accurate, the examiner will give the applicant an extendable one month time period to correct the record.

Examiner to Check for Accuracy

If the claims are allowable for other reasons of record, the examiner should send a letter setting forth the examiner's version of the statement attributed to him or her. If the record is complete and accurate, the examiner should place the indication, "Interview Record OK" on the paper recording the substance of the interview along with the date and the examiner's initials.

UNITED STATES PATENT AND TRADEMARK OFFICE

UNITED STATES DEPARTMENT OF COMMERCE
United States Patent and Trademark Office
Address: COMMISSIONER FOR PATENTS
P.O. Box 1450
Alexandria, Virginia 22313-1450
www.uspto.gov

APPLICATION NO.	FILING DATE	FIRST NAMED INVENTOR	ATTORNEY DOCKET NO.	CONFIRMATION NO.
14/691,649	04/21/2015	Brad Thomas	31681-31	7913

76656 7590 09/01/2015
Patent Docket Department
Armstrong Teasdale LLP
7700 Forsyth Boulevard
Suite 1800
St. Louis, MO 63105

EXAMINER
KRAMER, DEAN J

ART UNIT	PAPER NUMBER
3652	

NOTIFICATION DATE	DELIVERY MODE
09/01/2015	ELECTRONIC

Please find below and/or attached an Office communication concerning this application or proceeding.

The time period for reply, if any, is set in the attached communication.

Notice of the Office communication was sent electronically on above-indicated "Notification Date" to the following e-mail address(es):

USpatents@armstrongteasdale.com

PTOL-90A (Rev. 04/07)

Office Action Summary	Application No. 14/691,649	Applicant(s) THOMAS ET AL.	
	Examiner DEAN KRAMER	Art Unit 3652	AIA (First Inventor to File) Status Yes

-- The MAILING DATE of this communication appears on the cover sheet with the correspondence address --

Period for Reply

A SHORTENED STATUTORY PERIOD FOR REPLY IS SET TO EXPIRE 3 MONTHS FROM THE MAILING DATE OF THIS COMMUNICATION.

- Extensions of time may be available under the provisions of 37 CFR 1.136(a). In no event, however, may a reply be timely filed after SIX (6) MONTHS from the mailing date of this communication.
- If NO period for reply is specified above, the maximum statutory period will apply and will expire SIX (6) MONTHS from the mailing date of this communication.
- Failure to reply within the set or extended period for reply will, by statute, cause the application to become ABANDONED (35 U.S.C. § 133). Any reply received by the Office later than three months after the mailing date of this communication, even if timely filed, may reduce any earned patent term adjustment. See 37 CFR 1.704(b).

Status

1)☐ Responsive to communication(s) filed on _____.

☐ A declaration(s)/affidavit(s) under **37 CFR 1.130(b)** was/were filed on _____.

2a)☐ This action is **FINAL**. 2b)☒ This action is non-final.

3)☐ An election was made by the applicant in response to a restriction requirement set forth during the interview on _____; the restriction requirement and election have been incorporated into this action.

4)☐ Since this application is in condition for allowance except for formal matters, prosecution as to the merits is closed in accordance with the practice under *Ex parte Quayle*, 1935 C.D. 11, 453 O.G. 213.

Disposition of Claims*

5)☒ Claim(s) 1-20 is/are pending in the application.

5a) Of the above claim(s) _____ is/are withdrawn from consideration.

6)☐ Claim(s) _____ is/are allowed.

7)☒ Claim(s) 1-20 is/are rejected.

8)☒ Claim(s) 3 is/are objected to.

9)☐ Claim(s) _____ are subject to restriction and/or election requirement.

* If any claims have been determined allowable, you may be eligible to benefit from the **Patent Prosecution Highway** program at a participating intellectual property office for the corresponding application. For more information, please see http://www.uspto.gov/patents/init_events/pph/index.jsp or send an inquiry to PPHfeedback@uspto.gov.

Application Papers

10)☒ The specification is objected to by the Examiner.

11)☐ The drawing(s) filed on _____ is/are: a)☐ accepted or b)☐ objected to by the Examiner.

Applicant may not request that any objection to the drawing(s) be held in abeyance. See 37 CFR 1.85(a).

Replacement drawing sheet(s) including the correction is required if the drawing(s) is objected to. See 37 CFR 1.121(d).

Priority under 35 U.S.C. § 119

12)☐ Acknowledgment is made of a claim for foreign priority under 35 U.S.C. § 119(a)-(d) or (f).

Certified copies:

a)☐ All b)☐ Some** c)☐ None of the:

1.☐ Certified copies of the priority documents have been received.

2.☐ Certified copies of the priority documents have been received in Application No. _____.

3.☐ Copies of the certified copies of the priority documents have been received in this National Stage application from the International Bureau (PCT Rule 17.2(a)).

** See the attached detailed Office action for a list of the certified copies not received.

Attachment(s)

1) ☒ Notice of References Cited (PTO-892)

2) ☒ Information Disclosure Statement(s) (PTO/SB/08a and/or PTO/SB/08b) Paper No(s)/Mail Date _____.

3) ☐ Interview Summary (PTO-413) Paper No(s)/Mail Date. _____ .

4) ☐ Other: _____.

DETAILED ACTION

The present application, filed on or after March 16, 2013, is being examined under the first inventor to file provisions of the AIA.

Claim Objections

1. Claim 3 is objected to because of the following informalities: In line 1 of claim 3, it appears that the word –claim—should be inserted immediately after the word "in". Appropriate correction is required.

Claim Rejections - 35 USC § 112

2. The following is a quotation of 35 U.S.C. 112(b):

> (b) CONCLUSION.—The specification shall conclude with one or more claims particularly pointing out and distinctly claiming the subject matter which the inventor or a joint inventor regards as the invention.

The following is a quotation of 35 U.S.C. 112 (pre-AIA), second paragraph:

> The specification shall conclude with one or more claims particularly pointing out and distinctly claiming the subject matter which the applicant regards as his invention.

3. Claims 14-20 are rejected under 35 U.S.C. 112(b) or 35 U.S.C. 112 (pre-AIA), second paragraph, as being indefinite for failing to particularly point out and distinctly claim the subject matter which the inventor or a joint inventor, or for pre-AIA the applicant regards as the invention.

There is no clear antecedent basis for "the apparatus" as recited in line 9 of claim 14.

Claim Rejections - 35 USC § 102

4. In the event the determination of the status of the application as subject to AIA 35 U.S.C. 102 and 103 (or as subject to pre-AIA 35 U.S.C. 102 and 103) is incorrect, any

correction of the statutory basis for the rejection will not be considered a new ground of rejection if the prior art relied upon, and the rationale supporting the rejection, would be the same under either status.

5. The following is a quotation of the appropriate paragraphs of 35 U.S.C. 102 that form the basis for the rejections under this section made in this Office action:

> A person shall be entitled to a patent unless –
>
> (a)(1) the claimed invention was patented, described in a printed publication, or in public use, on sale or otherwise available to the public before the effective filing date of the claimed invention.

6. Claims 14-19, as understood, are rejected under 35 U.S.C. 102(a)(1) as being anticipated by Yasuda et al. (8,821,104).

The patent to Yasuda et al. shows a compact tool carrier comprising a loader (2,77,78), a mainframe (1), a drive wheel (69) attached to the mainframe about a rotational axis (71), an actuator (79) pivoted to the mainframe at point (91), and linkage (81,82) pivoted to the mainframe at points (85,86).

7. Claims 14-16 and 18-20, as understood, are rejected under 35 U.S.C. 102(a)(1) as being anticipated by Green (7,695,236).

Green shows an embodiment of a compact tool carrier in Figure 8 configured for walk-behind operator control comprising a mainframe (22), a loader arm (192), linkage (182,188), an actuator (184), a control station (40), an engine (24), and a drive wheel (42).

Claim Rejections - 35 USC § 103

8. The following is a quotation of 35 U.S.C. 103 which forms the basis for all obviousness rejections set forth in this Office action:

> A patent for a claimed invention may not be obtained, notwithstanding that the claimed invention is not identically disclosed as set forth in section 102 of this title, if the differences between the claimed invention and the prior art are such that the claimed invention as a whole would have been obvious before the effective filing date of the claimed invention to a person having ordinary skill in the art to which the claimed invention pertains. Patentability shall not be negated by the manner in which the invention was made.

9. Claims 1-13 and 17, as understood, are rejected under 35 U.S.C. 103 as being unpatentable over Green (7,695,236) in view of Valere (2009/0116943).

Green's Figure 8 embodiment was presented above in section 7 and substantially shows the invention as set forth in the above claims except for a specific recitation of its mass being less than about 1500 kg. and a platform for an operator to stand on.

However, Valere shows a compact tool carrier having a platform (4) on which a user stand during operation of the vehicle. Valere also shows it old and well known to form its loader assembly (3) with two spaced apart arms (see Figure 2) for stable connection to a bucket or the like.

It would have been obvious to one of ordinary skill in the art before the effective filing date of the claimed invention to provide Green's control station with a platform on which a user could stand, similar to that shown in the Valere patent, so that the user would not have to laboriously walk behind the device while operating. It also would have been obvious to form Green loader assembly as a two-armed loader, as taught by Valere, in order to establish a more stable connection with a bucket, fork or leg

assembly. Further, it would have been an obvious choice of mechanical design to construct the resulting device as light as possible (note: Green broadly discloses its vehicle as “light weight” in col. 9, line 30) for better maneuverability over certain terrain.

Specification

10. The abstract of the disclosure is objected to because it is less than fifty words in length. Correction is required. See MPEP § 608.01(b).

11. The disclosure is objected to because of the following informalities: In paragraph [0025], line 9, it appears that the number “10” should be changed to –18--.

Appropriate correction is required.

Conclusion

12. The prior art made of record and not relied upon is considered pertinent to applicant's disclosure. Schmelzer (4,239,444) and Yates (4,117,610) show “compact” vehicles with linkages and actuators pivoted near the same height as the drive wheel.

Any inquiry concerning this communication or earlier communications from the examiner should be directed to DEAN KRAMER whose telephone number is (571)272-6926. The examiner can normally be reached on Monday-Friday.

If attempts to reach the examiner by telephone are unsuccessful, the examiner’s supervisor, Saul Rodriguez can be reached on (571) 272-7097. The fax phone number for the organization where this application or proceeding is assigned is 571-273-8300.

Information regarding the status of an application may be obtained from the Patent Application Information Retrieval (PAIR) system. Status information for published applications may be obtained from either Private PAIR or Public PAIR. Status information for unpublished applications is available through Private PAIR only. For more information about the PAIR system, see http://pair-direct.uspto.gov. Should you have questions on access to the Private PAIR system, contact the Electronic Business Center (EBC) at 866-217-9197 (toll-free). If you would like assistance from a USPTO Customer Service Representative or access to the automated information system, call 800-786-9199 (IN USA OR CANADA) or 571-272-1000.

/DEAN KRAMER/
Primary Examiner, Art Unit 3652

djk
8/25/15

UNITED STATES PATENT AND TRADEMARK OFFICE

UNITED STATES DEPARTMENT OF COMMERCE
United States Patent and Trademark Office
Address: COMMISSIONER FOR PATENTS
P.O. Box 1450
Alexandria, Virginia 22313-1450
www.uspto.gov

APPLICATION NUMBER	FILING OR 371(C) DATE	FIRST NAMED APPLICANT	ATTY. DOCKET NO./TITLE
14/691,649	04/21/2015	Brad Thomas	31681-31

CONFIRMATION NO. 7913

POA ACCEPTANCE LETTER

OC000000075499649

76656
Patent Docket Department
Armstrong Teasdale LLP
7700 Forsyth Boulevard
Suite 1800
St. Louis, MO 63105

Date Mailed: 06/03/2015

NOTICE OF ACCEPTANCE OF POWER OF ATTORNEY

This is in response to the Power of Attorney filed 05/28/2015.

The Power of Attorney in this application is accepted. Correspondence in this application will be mailed to the above address as provided by 37 CFR 1.33.

Questions about the contents of this notice and the requirements it sets forth should be directed to the Office of Data Management, Application Assistance Unit, at **(571) 272-4000** or **(571) 272-4200** or **1-888-786-0101**.

/ltaba/

Doc Code: PA..
Document Description: Power of Attorney

PTO/AIA/82A (07-13)
Approved for use through 11/30/2014. OMB 0651-0051
U.S. Patent and Trademark Office; U.S. DEPARTMENT OF COMMERCE
Under the Paperwork Reduction Act of 1995, no persons are required to respond to a collection of information unless it displays a valid OMB control number.

TRANSMITTAL FOR POWER OF ATTORNEY TO ONE OR MORE REGISTERED PRACTITIONERS

NOTE: This form is to be submitted with the Power of Attorney by Applicant form (PTO/AIA/82B) to identify the application to which the Power of Attorney is directed, in accordance with 37 CFR 1.5, unless the application number and filing date are identified in the Power of Attorney by Applicant form. If neither form PTO/AIA/82A nor form PTO/AIA82B identifies the application to which the Power of Attorney is directed, the Power of Attorney will not be recognized in the application.

Application Number	14/691,649
Filing Date	April 21, 2015
First Named Inventor	Brad Thomas
Title	LOW PROFILE COMPACT TOOL CARRIERS
Art Unit	3652
Examiner Name	Not Yet Assigned
Attorney Docket Number	31681-31 (RDI2013-40)

SIGNATURE of Applicant or Patent Practitioner

Signature	/Michael J. Vander Molen/	Date (Optional)	05/28/2015
Name	Michael J. Vander Molen	Registration Number	57,274
Title (if Applicant is a juristic entity)	Attorney for Applicant		
Applicant Name (if Applicant is a juristic entity)	Vermeer Manufacturing Company		

NOTE: This form must be signed in accordance with 37 CFR 1.33. See 37 CFR 1.4(d) for signature requirements and certifications. If more than one applicant, use multiple forms.

☐ *Total of _____ forms are submitted.

This collection of information is required by 37 CFR 1.131, 1.32, and 1.33. The information is required to obtain or retain a benefit by the public which is to file (and by the USPTO to process) an application. Confidentiality is governed by 35 U.S.C. 122 and 37 CFR 1.11 and 1.14. This collection is estimated to take 3 minutes to complete, including gathering, preparing, and submitting the completed application form to the USPTO. Time will vary depending upon the individual case. Any comments on the amount of time you require to complete this form and/or suggestions for reducing this burden, should be sent to the Chief Information Officer, U.S. Patent and Trademark Office, U.S. Department of Commerce, P.O. Box 1450, Alexandria, VA 22313-1450. DO NOT SEND FEES OR COMPLETED FORMS TO THIS ADDRESS. **SEND TO: Commissioner for Patents, P.O. Box 1450, Alexandria, VA 22313-1450.**

If you need assistance in completing the form, call 1-800-PTO-9199 and select option 2.

Doc Code: PA..
Document Description: Power of Attorney

PTO/AIA/82B (07-13)
Approved for use through 11/30/2014. OMB 0651-0051
U.S. Patent and Trademark Office; U.S. DEPARTMENT OF COMMERCE
Under the Paperwork Reduction Act of 1995, no persons are required to respond to a collection of information unless it displays a valid OMB control number

POWER OF ATTORNEY BY APPLICANT

I hereby revoke all previous powers of attorney given in the application identified in either the attached transmittal letter or the boxes below.

Application Number	Filing Date

(Note: The boxes above may be left blank if information is provided on form PTO/AIA/82A.)

☑ I hereby appoint the Patent Practitioner(s) associated with the following Customer Number as my/our attorney(s) or agent(s), and to transact all business in the United States Patent and Trademark Office connected therewith for the application referenced in the attached transmittal letter (form PTO/AIA/82A) or identified above: 76656

OR

☐ I hereby appoint Practitioner(s) named in the attached list (form PTO/AIA/82C) as my/our attorney(s) or agent(s), and to transact all business in the United States Patent and Trademark Office connected therewith for the patent application referenced in the attached transmittal letter (form PTO/AIA/82A) or identified above. (Note: Complete form PTO/AIA/82C.)

Please recognize or change the correspondence address for the application identified in the attached transmittal letter to:

☑ The address associated with the above-mentioned Customer Number

OR

☐ The address associated with Customer Number:

OR

Firm or Individual Name					
Address					
City		State		Zip	
Country					
Telephone		Email			

I am the Applicant (if the Applicant is a juristic entity, list the Applicant name in the box):

☐ Inventor or Joint Inventor (title not required below)

☐ Legal Representative of a Deceased or Legally Incapacitated Inventor (title not required below)

☑ Assignee or Person to Whom the Inventor is Under an Obligation to Assign (provide signer's title if applicant is a juristic entity)

☐ Person Who Otherwise Shows Sufficient Proprietary Interest (e.g., a petition under 37 CFR 1.46(b)(2) was granted in the application or is concurrently being filed with this document) (provide signer's title if applicant is a juristic entity)

SIGNATURE of Applicant for Patent

The undersigned (whose title is supplied below) is authorized to act on behalf of the applicant (e.g., where the applicant is a juristic entity).

Signature		Date (Optional)	15 AUGUST 2013
Name	Bob Smith		
Title	General Counsel Vermeer Manufacturing Company		

NOTE: Signature - This form must be signed by the applicant in accordance with 37 CFR 1.33. See 37 CFR 1.4 for signature requirements and certifications. If more than one applicant, use multiple forms.

☐ Total of forms are submitted.

This collection of information is required by 37 CFR 1.131, 1.32, and 1.33. The information is required to obtain or retain a benefit by the public which is to file (and by the USPTO to process) an application. Confidentiality is governed by 35 U.S.C. 122 and 37 CFR 1.11 and 1.14. This collection is estimated to take 3 minutes to complete, including gathering, preparing, and submitting the completed application form to the USPTO. Time will vary depending upon the individual case. Any comments on the amount of time you require to complete this form and/or suggestions for reducing this burden, should be sent to the Chief Information Officer, U.S. Patent and Trademark Office, U.S. Department of Commerce, P.O. Box 1450, Alexandria, VA 22313-1450. DO NOT SEND FEES OR COMPLETED FORMS TO THIS ADDRESS. **SEND TO: Commissioner for Patents, P.O. Box 1450, Alexandria, VA 22313-1450.**

If you need assistance in completing the form, call 1-800-PTO-9199 and select option 2.

PTO/AIA/96 (08-12)
Approved for use through 01/31/2013. OMB 0651-0031
U.S. Patent and Trademark Office;U.S. DEPARTMENT OF COMMERCE
Under the Paperwork Reduction Act of1995, no persons arerequired to respond to a collection of information unless it displays a valid OMB control number.

STATEMENT UNDER 37 CFR 3.73(c)

Applicant/Patent Owner: Vermeer Manufacturing Company

Application No./Patent No.: 14/691,649 Filed/Issue Date: April 21, 2015

Titled: LOW PROFILE COMPACT TOOL CARRIERS

Vermeer Manufacturing Company, a Corporation

(Name of Assignee) (Type of Assignee, e.g., corporation, partnership, university, government agency, etc.)

states that, for the patent application/patent identified above, it is (choose **one** of options 1, 2, 3 or 4 below):

1. ☑ The assignee of the entire right, title, and interest.

2. ☐ An assignee of less than the entire right, title, and interest (check applicable box):

☐ The extent (by percentage) of its ownership interest is _____%. Additional Statement(s) by the owners holding the balance of the interest must be submitted to account for 100% of the ownership interest.

☐ There are unspecified percentages of ownership. The other parties, including inventors, who together own the entire right, title and interest are:

Additional Statement(s) by the owner(s) holding the balance of the interest must be submitted to account for the entire right, title, and interest.

3. ☐ The assignee of an undivided interest in the entirety (a complete assignment from one of the joint inventors was made). The other parties, including inventors, who together own the entire right, title, and interest are:

Additional Statement(s) by the owner(s) holding the balance of the interest must be submitted to account for the entire right, title, and interest.

4. ☐ The recipient, via a court proceeding or the like (*e.g.*, bankruptcy, probate), of an undivided interest in the entirety (a complete transfer of ownership interest was made). The certified document(s) showing the transfer is attached.

The interest identified in option 1, 2 or 3 above (not option 4) is evidenced by either (choose **one** of options A or B below):

A. ☑ An assignment from the inventor(s) of the patent application/patent identified above. The assignment was recorded in the United States Patent and Trademark Office at Reel 035676, Frame 0246, or for which a copy thereof is attached.

B. ☐ A chain of title from the inventor(s), of the patent application/patent identified above, to the current assignee as follows:

1. From: _____ To: _____

The document was recorded in the United States Patent and Trademark Office at

Reel _____, Frame _____, or for which a copy thereof is attached.

2. From: _____ To: _____

The document was recorded in the United States Patent and Trademark Office at

Reel _____, Frame _____, or for which a copy thereof is attached.

This collection of information is required by37 CFR3.73(b). The information is required toobtain or retain a benefit by the public which is to file (and by the USPTO to process) an application. Confidentialityis governed by35 U.S.C. 122and 37 CFR1.11 and1.14. Thiscollection is estimated to take 12 minutes to complete, including gathering, preparing, and submittingthe completed application form to the USPTO.Time will vary depending upon the individual case. Any comments on the amount of time you require to complete this form and/or suggestions for reducing this burden, should be sent tothe Chief Information Officer, U.S. Patent and Trademark Office, U.S. Department of Commerce, P.O. Box 1450, Alexandria, VA 22313-1450. DO NOT SEND FEES OR COMPLETED FORMS TO THIS ADDRESS.**SEND TO: Commissioner for Patents, P.O. Box 1450, Alexandria, VA 22313-1450**

If you need assistance in completing the form, call 1-800-PTO-9199 and select option 2.

Under the Paperwork Reduction Act of 1995, no persons are required to respond to a collection of information unless it displays a valid OMB control number.

STATEMENT UNDER 37 CFR 3.73(c)

3. From: _____ To: _____

The document was recorded in the United States Patent and Trademark Office at

Reel _____, Frame _____, or for which a copy thereof is attached.

4. From: _____ To: _____

The document was recorded in the United States Patent and Trademark Office at

Reel _____, Frame _____, or for which a copy thereof is attached.

5. From: _____ To: _____

The document was recorded in the United States Patent and Trademark Office at

Reel _____, Frame _____, or for which a copy thereof is attached.

6. From: _____ To: _____

The document was recorded in the United States Patent and Trademark Office at

Reel _____, Frame _____, or for which a copy thereof is attached.

☐ Additional documents in the chain of title are listed on a supplemental sheet(s).

☐ As required by 37 CFR 3.73(c)(1)(i), the documentary evidence of the chain of title from the original owner to the assignee was, or concurrently is being, submitted for recordation pursuant to 37 CFR 3.11.

[NOTE: A separate copy (i.e., a true copy of the original assignment document(s)) must be submitted to Assignment Division in accordance with 37 CFR Part 3, to record the assignment in the records of the USPTO. See MPEP 302.08]

The undersigned (whose title is supplied below) is authorized to act on behalf of the assignee.

/Michael J. Vander Molen/	05/28/2015
Signature	Date
Michael J. Vander Molen	57,274
Printed or Typed Name	Title or Registration Number

UNITED STATES PATENT AND TRADEMARK OFFICE

Commissioner for Patents
United States Patent and Trademark Office
P.O. Box 1450
Alexandria, VA 22313-1450
www.uspto.gov

Patent Docket Department
Armstrong Teasdale LLP
7700 Forsyth Boulevard
Suite 1800
St. Louis MO 63105

MAILED
MAY 27 2015
OFFICE OF PETITIONS

Doc Code: TRACK1.GRANT

Decision Granting Request for Prioritized Examination (Track I or After RCE)	Application No.: 14/691,649

1. THE REQUEST FILED April 21, 2015 IS **GRANTED.**

The above-identified application has met the requirements for prioritized examination

A. ☒ for an original nonprovisional application (Track I).
B. ☐ for an application undergoing continued examination (RCE).

2. **The above-identified application will undergo prioritized examination.** The application will be accorded special status throughout its entire course of prosecution until one of the following occurs:

A. filing a **petition for extension of time** to extend the time period for filing a reply;
B. filing an **amendment to amend the application to contain more than four independent claims, more than thirty total claims**, or a multiple dependent claim;
C. filing a **request for continued examination**;
D. filing a notice of appeal;
E. filing a request for suspension of action;
F. mailing of a notice of allowance;
G. mailing of a final Office action;
H. completion of examination as defined in 37 CFR 41.102; or
I. abandonment of the application.

Telephone inquiries with regard to this decision should be directed to Brian W. Brown at 571-272-5338.

/Brian W. Brown/
[*Signature*]

Petitions Examiner, Office of Petitions
(Title)

U.S. Patent and Trademark Office
PTO-2298 (Rev. 02-2012)

UNITED STATES PATENT AND TRADEMARK OFFICE

UNITED STATES DEPARTMENT OF COMMERCE
United States Patent and Trademark Office
Address: COMMISSIONER FOR PATENTS
P.O. Box 1450
Alexandria, Virginia 22313-1450
www.uspto.gov

APPLICATION NUMBER	FILING or 371(c) DATE	GRP ART UNIT	FIL FEE REC'D	ATTY.DOCKET.NO	TOT CLAIMS	IND CLAIMS
14/691,649	04/21/2015	3652	1740	31681-31	20	2

CONFIRMATION NO. 7913

UPDATED FILING RECEIPT

76656
Patent Docket Department
Armstrong Teasdale LLP
7700 Forsyth Boulevard
Suite 1800
St. Louis, MO 63105

Date Mailed: 05/26/2015

Receipt is acknowledged of this non-provisional patent application. The application will be taken up for examination in due course. Applicant will be notified as to the results of the examination. Any correspondence concerning the application must include the following identification information: the U.S. APPLICATION NUMBER, FILING DATE, NAME OF APPLICANT, and TITLE OF INVENTION. Fees transmitted by check or draft are subject to collection. Please verify the accuracy of the data presented on this receipt. **If an error is noted on this Filing Receipt, please submit a written request for a Filing Receipt Correction. Please provide a copy of this Filing Receipt with the changes noted thereon. If you received a "Notice to File Missing Parts" for this application, please submit any corrections to this Filing Receipt with your reply to the Notice. When the USPTO processes the reply to the Notice, the USPTO will generate another Filing Receipt incorporating the requested corrections**

Inventor(s)

Brad Thomas, Pleasant Hill, IA;
Louis Hartke, Pella, IA;
Greg Langenfeld, Bettendorf, IA;
Matt Hutchinson, Pella, IA;

Applicant(s)

Vermeer Manufacturing Company, Pella, IA

Assignment For Published Patent Application

VERMEER MANUFACTURING COMPANY, Pella, IA

Power of Attorney: None

Domestic Priority data as claimed by applicant

This appln claims benefit of 62/118,860 02/20/2015

Foreign Applications for which priority is claimed (You may be eligible to benefit from the **Patent Prosecution Highway** program at the USPTO. Please see http://www.uspto.gov for more information.) - None.
Foreign application information must be provided in an Application Data Sheet in order to constitute a claim to foreign priority. See 37 CFR 1.55 and 1.76.

Permission to Access - A proper **Authorization to Permit Access to Application by Participating Offices** (PTO/SB/39 or its equivalent) has been received by the USPTO.

If Required, Foreign Filing License Granted: 04/30/2015
The country code and number of your priority application, to be used for filing abroad under the Paris Convention, is **US 14/691,649**

Projected Publication Date: 08/25/2016

Non-Publication Request: No

Early Publication Request: No
Title

LOW PROFILE COMPACT TOOL CARRIERS

Preliminary Class

414

Statement under 37 CFR 1.55 or 1.78 for AIA (First Inventor to File) Transition Applications: No

PROTECTING YOUR INVENTION OUTSIDE THE UNITED STATES

Since the rights granted by a U.S. patent extend only throughout the territory of the United States and have no effect in a foreign country, an inventor who wishes patent protection in another country must apply for a patent in a specific country or in regional patent offices. Applicants may wish to consider the filing of an international application under the Patent Cooperation Treaty (PCT). An international (PCT) application generally has the same effect as a regular national patent application in each PCT-member country. The PCT process **simplifies** the filing of patent applications on the same invention in member countries, but **does not result** in a grant of "an international patent" and does not eliminate the need of applicants to file additional documents and fees in countries where patent protection is desired.

Almost every country has its own patent law, and a person desiring a patent in a particular country must make an application for patent in that country in accordance with its particular laws. Since the laws of many countries differ in various respects from the patent law of the United States, applicants are advised to seek guidance from specific foreign countries to ensure that patent rights are not lost prematurely.

Applicants also are advised that in the case of inventions made in the United States, the Director of the USPTO must issue a license before applicants can apply for a patent in a foreign country. The filing of a U.S. patent application serves as a request for a foreign filing license. The application's filing receipt contains further information and guidance as to the status of applicant's license for foreign filing.

Applicants may wish to consult the USPTO booklet, "General Information Concerning Patents" (specifically, the section entitled "Treaties and Foreign Patents") for more information on timeframes and deadlines for filing foreign patent applications. The guide is available either by contacting the USPTO Contact Center at 800-786-9199, or it can be viewed on the USPTO website at http://www.uspto.gov/web/offices/pac/doc/general/index.html.

For information on preventing theft of your intellectual property (patents, trademarks and copyrights), you may wish to consult the U.S. Government website, http://www.stopfakes.gov. Part of a Department of Commerce initiative, this website includes self-help "toolkits" giving innovators guidance on how to protect intellectual property in specific countries such as China, Korea and Mexico. For questions regarding patent enforcement issues, applicants may call the U.S. Government hotline at 1-866-999-HALT (1-866-999-4258).

LICENSE FOR FOREIGN FILING UNDER

Title 35, United States Code, Section 184

Title 37, Code of Federal Regulations, 5.11 & 5.15

GRANTED

The applicant has been granted a license under 35 U.S.C. 184, if the phrase "IF REQUIRED, FOREIGN FILING LICENSE GRANTED" followed by a date appears on this form. Such licenses are issued in all applications where the conditions for issuance of a license have been met, regardless of whether or not a license may be required as set forth in 37 CFR 5.15. The scope and limitations of this license are set forth in 37 CFR 5.15(a) unless an earlier license has been issued under 37 CFR 5.15(b). The license is subject to revocation upon written notification. The date indicated is the effective date of the license, unless an earlier license of similar scope has been granted under 37 CFR 5.13 or 5.14.

This license is to be retained by the licensee and may be used at any time on or after the effective date thereof unless it is revoked. This license is automatically transferred to any related applications(s) filed under 37 CFR 1.53(d). This license is not retroactive.

The grant of a license does not in any way lessen the responsibility of a licensee for the security of the subject matter as imposed by any Government contract or the provisions of existing laws relating to espionage and the national security or the export of technical data. Licensees should apprise themselves of current regulations especially with respect to certain countries, of other agencies, particularly the Office of Defense Trade Controls, Department of State (with respect to Arms, Munitions and Implements of War (22 CFR 121-128)); the Bureau of Industry and Security, Department of Commerce (15 CFR parts 730-774); the Office of Foreign AssetsControl, Department of Treasury (31 CFR Parts 500+) and the Department of Energy.

NOT GRANTED

No license under 35 U.S.C. 184 has been granted at this time, if the phrase "IF REQUIRED, FOREIGN FILING LICENSE GRANTED" DOES NOT appear on this form. Applicant may still petition for a license under 37 CFR 5.12, if a license is desired before the expiration of 6 months from the filing date of the application. If 6 months has lapsed from the filing date of this application and the licensee has not received any indication of a secrecy order under 35 U.S.C. 181, the licensee may foreign file the application pursuant to 37 CFR 5.15(b).

SelectUSA

The United States represents the largest, most dynamic marketplace in the world and is an unparalleled location for business investment, innovation, and commercialization of new technologies. The U.S. offers tremendous resources and advantages for those who invest and manufacture goods here. Through SelectUSA, our nation works to promote and facilitate business investment. SelectUSA provides information assistance to the international investor community; serves as an ombudsman for existing and potential investors; advocates on behalf of U.S. cities, states, and regions competing for global investment; and counsels U.S. economic development organizations on investment attraction best practices. To learn more about why the United States is the best country in the world to develop technology, manufacture products, deliver services, and grow your business, visit http://www.SelectUSA.gov or call +1-202-482-6800.

First Named Inventor: Brad Thomas
Application Number: 14/691,649
Filing Date: April 21, 2015
Art Unit: To Be Determined
Confirmation No.: 7913

DECLARATION AND ASSIGNMENT FOR UTILITY OR DESIGN APPLICATION

As a below named inventor, I hereby declare that:

My residence, post office address and country of residence are as stated below next to my name.

I believe I am the original and sole inventor (if only one name is listed below) or an original and joint inventor (if plural names are listed below) of the subject matter which is claimed and for which a patent is sought on the invention entitled:

LOW PROFILE COMPACT TOOL CARRIERS

the specification of which: (check one)

☐ is attached hereto

☒ was filed on April 21, 2015 as Application Serial No. 14/691,649.

We hereby authorize and request our attorneys and agents, and the assignee or its delegated attorneys or agents, to insert above the application number and filing date of the application when known.

I hereby state that I have reviewed and understand the contents of the above identified specification, including the claims and any claims amended by any amendment made prior to the date of this Declaration.

I acknowledge my duty to disclose all information which is material to patentability of this application in accordance with 37 CFR §1.56.

The above-identified application was made or was authorized to be made by me.

ASSIGNMENT

WHEREAS, the undersigned have invented improvements described in the above-identified application.

AND, WHEREAS, Vermeer Manufacturing Company of 1210 Vermeer Road East, Pella, Iowa 50219, a corporation of the State of Iowa (hereinafter referred to as "ASSIGNEE") is desirous of acquiring certain rights thereunder;

Priority Claimed

COUNTRY	APPLICATION NUMBER	DATE OF FILING (day, month, year)	PRIORITY NOT CLAIMED	CERTIFIED COPY ATTACHED
				☐ Yes ☐ No
				☐ Yes ☐ No

CLAIM FOR BENEFIT OF PROVISIONAL APPLICATION(S)

I hereby claim the benefit under 35 U.S.C. §119(e) of any United States provisional application(s) listed below.

APPLICATION NUMBER(S)	FILING DATE (day, month, year)
62/118,860	20 February 2015

CLAIM FOR BENEFIT OF EARLIER U.S. APPLICATION(S) UNDER 35 U.S.C. §120

(complete this part only if this is a divisional, continuation or CIP application)

I hereby claim the benefit under 35 U.S.C. §120 of any United States application(s), or 365(c) of any PCT International application designating the United States of America, listed below and, insofar as the subject matter of each of the claims of this application is not disclosed in the prior United States application in the manner provided by the first paragraph of 35 U.S.C. §112, I acknowledge the duty to disclose material information as defined in 37 CFR §1.56 which occurred between the filing date of the prior application and the national or PCT international filing date of this application:

U.S. PARENT APPLICATION OR PCT PARENT NUMBER	PARENT FILING DATE (day, month, year)	STATUS (patent and number, pending, abandoned)

I hereby declare that all statements made herein of my own knowledge are true and that all statements made on information and belief are believed to be true; and further that these statements were made with the knowledge that willful false statements and the like so made are punishable by fine or imprisonment of not more than five (5) years, or both, under Section 1001 of Title 18 of the United States Code and that such willful false statements may jeopardize the validity of the application or any patent issued thereon.

Full name of sole or first inventor Brad Thomas

Inventor's signature Brad Thomas Date 5/8/15

Residence Pleasant Hill, Iowa Country of Residence US

Post Office address 465 Hillside Court

Pleasant Hill, Iowa 50327

STATE OF Iowa

COUNTY OF Marion ss.

This 8th day of May, 2015 before me personally came the above-named **Brad Thomas**, to me personally known as the individual who executed the foregoing assignment, who acknowledged to me that he/she executed the same of his/her own free will for the purposes therein set forth.

Seal

VALERIE LINDENMAN
Commission Number 768349
My Commission Expires
6-7-2017

Valerie Lindenman
(Notary Public)

Full name of second joint inventor Louis Hartke

Inventor's signature Louis Hartke Date 5/5/15

Residence Pella, Iowa Country of Residence US

Post Office address 2005 Highway 163

Pella, Iowa 50219

STATE OF

ss.

COUNTY OF

This 5th day of May, _____ before me personally came the above-named **Louis Hartke**, to me personally known as the individual who executed the foregoing assignment, who acknowledged to me that he/she executed the same of his/her own free will for the purposes therein set forth.

Seal

VALERIE LINDENMAN
Commission Number 766349
My Commission Expires
6-7-2017
IOWA

Valerie Lindenman
(Notary Public)

Full name of third joint inventor Greg Langenfeld

Inventor's signature Greg Langenfeld Date 5/18/2015

Residence Bettendorf, Iowa Country of Residence US

Post Office address 2425 Baron Court

Bettendorf, Iowa 52722

STATE OF Iowa

ss.

COUNTY OF Marion

This 18th day of May, 2015 before me personally came the above-named **Greg Langenfeld**, to me personally known as the individual who executed the foregoing assignment, who acknowledged to me that he/she executed the same of his/her own free will for the purposes therein set forth.

Seal

VALERIE LINDENMAN
Commission Number 768349
My Commission Expires
6-7-2017

Valerie Lindenman
(Notary Public)

Full name of fourth joint inventor: Matt Hutchinson

Inventor's signature: Date 5/4/15

Residence: Pella, Iowa Country of Residence: US

Post Office address: 410 Highway T14

Pella, Iowa 50219

STATE OF Iowa

COUNTY OF Marion ss.

This 4th day of May, 2015 before me personally came the above-named **Matt Hutchinson**, to me personally known as the individual who executed the foregoing assignment, who acknowledged to me that he/she executed the same of his/her own free will for the purposes therein set forth.

Seal

VALERIE LINDENMAN
Commission Number 768349
My Commission Expires
6-1-2017

(Notary Public)

EXPLANATION OF ACKNOWLEDGEMENT

By signing the declaration, you acknowledge your duty to disclose to the U.S. Patent and Trademark Office information which is material to the examination of this application in accordance with Title 37, Code of Federal Regulations, 1.56. Material information includes any information concerning whether:

The subject matter of this application was known or used by others in the United States before your invention thereof; or

The subject matter of this application was patented or described in any printed publication in any country before your invention thereof or more than one year prior to the date of this application; or

The subject matter of this application was in public use, offered for sale or on sale in the United States more than one year prior to the filing date of this application; or

The subject matter of this application was first patented or made the subject of an inventor's certificate issued in any country foreign to the United States as an application filed by you or your representatives or assigns more than twelve months prior to the date of this application; or

any application for patent or inventor's certificate on the subject matter of this application has been filed by your representatives or assigns in any foreign country.

In addition, you must advise us of the closest prior art (including your own patents and publications) of which you are aware so that we may bring it to the attention of the U.S. Patent and Trademark Office.

This duty to disclose material information continues after the application is filed. During the pendency of this patent application, each person substantially involved in the preparation or prosecution of this patent application, including each inventor, has a duty to disclose to the U.S. Patent and Trademark Office all known information which would be material to patentability. Failure to meet this duty can result in an unenforceable and/or invalid patent.

Any of the above information should be brought to the attention of the U.S. Patent and Trademark Office within three months of filing of this application, or within three months of acquiring such information, whichever is later. Accordingly, please promptly advise us of any of the above information, or any other information that may be material to patentability and is either presently known to you or later becomes known to you during the pendency of this application.

PATENT ASSIGNMENT COVER SHEET

Electronic Version v1.1
Stylesheet Version v1.2

EPAS ID: PAT3360946

SUBMISSION TYPE:	NEW ASSIGNMENT
NATURE OF CONVEYANCE:	ASSIGNMENT

CONVEYING PARTY DATA

Name	Execution Date
BRAD THOMAS	05/08/2015
LOUIS HARTKE	05/05/2015
GREG LANGENFELD	05/18/2015
MATT HUTCHINSON	05/04/2015

RECEIVING PARTY DATA

Name:	VERMEER MANUFACTURING COMPANY
Street Address:	1210 VERMEER ROAD EAST
City:	PELLA
State/Country:	IOWA
Postal Code:	50219

PROPERTY NUMBERS Total: 1

Property Type	Number
Application Number:	14691649

CORRESPONDENCE DATA

Fax Number: (314)612-2307

Correspondence will be sent to the e-mail address first; if that is unsuccessful, it will be sent using a fax number, if provided; if that is unsuccessful, it will be sent via US Mail.

Phone: 314-621-5070
Email: USpatents@armstrongteasdale.com
Correspondent Name: PATENT DOCKET DEPARTMENT ARMSTRONG TEASD
Address Line 1: 7700 FORSYTH BOULEVARD
Address Line 2: SUITE 1800
Address Line 4: ST. LOUIS, MISSOURI 63105

ATTORNEY DOCKET NUMBER:	RDI2013-40
NAME OF SUBMITTER:	MICHAEL J. VANDER MOLEN
SIGNATURE:	/Michael J. Vander Molen/
DATE SIGNED:	05/20/2015
	This document serves as an Oath/Declaration (37 CFR 1.63).

Total Attachments: 8

source=RDI2013-40_Executed_Combined_Declaration_and_Assignment_20MAY2015#page1.tif
source=RDI2013-40_Executed_Combined_Declaration_and_Assignment_20MAY2015#page2.tif
source=RDI2013-40_Executed_Combined_Declaration_and_Assignment_20MAY2015#page3.tif
source=RDI2013-40_Executed_Combined_Declaration_and_Assignment_20MAY2015#page4.tif
source=RDI2013-40_Executed_Combined_Declaration_and_Assignment_20MAY2015#page5.tif
source=RDI2013-40_Executed_Combined_Declaration_and_Assignment_20MAY2015#page6.tif
source=RDI2013-40_Executed_Combined_Declaration_and_Assignment_20MAY2015#page7.tif
source=RDI2013-40_Executed_Combined_Declaration_and_Assignment_20MAY2015#page8.tif

First Named Inventor: Brad Thomas
Application Number: 14/691,649
Filing Date: April 21, 2015
Art Unit: To Be Determined
Confirmation No.: 7913

DECLARATION AND ASSIGNMENT FOR UTILITY OR DESIGN APPLICATION

As a below named inventor, I hereby declare that:

My residence, post office address and country of residence are as stated below next to my name.

I believe I am the original and sole inventor (if only one name is listed below) or an original and joint inventor (if plural names are listed below) of the subject matter which is claimed and for which a patent is sought on the invention entitled:

LOW PROFILE COMPACT TOOL CARRIERS

the specification of which: (check one)

☐ is attached hereto

☒ was filed on April 21, 2015 as Application Serial No. 14/691,649.

We hereby authorize and request our attorneys and agents, and the assignee or its delegated attorneys or agents, to insert above the application number and filing date of the application when known.

I hereby state that I have reviewed and understand the contents of the above identified specification, including the claims and any claims amended by any amendment made prior to the date of this Declaration.

I acknowledge my duty to disclose all information which is material to patentability of this application in accordance with 37 CFR §1.56.

The above-identified application was made or was authorized to be made by me.

ASSIGNMENT

WHEREAS, the undersigned have invented improvements described in the above-identified application.

AND, WHEREAS, Vermeer Manufacturing Company of 1210 Vermeer Road East, Pella, Iowa 50219, a corporation of the State of Iowa (hereinafter referred to as "ASSIGNEE") is desirous of acquiring certain rights thereunder;

NOW, THEREFORE, for one dollar and other good and valuable consideration, receipt of all of which is hereby acknowledged, I have agreed to and do hereby sell, assign and transfer unto said ASSIGNEE the entire right, title and interest in and throughout the United States of America (including its territories and dependencies) and all countries foreign thereto in and to said invention, said United States application, any other United States applications (including provisional, non-provisional, divisional, continuing, or reissue applications) based in whole or in part on said United States application or in whole or in part on said invention, any foreign applications based in whole or in part on any of the aforesaid United States applications or in whole or in part on said invention, and any and all patents (including extensions thereof) of any country which have been or may be granted on any of the aforesaid applications or on said invention or any part thereof;

TO BE HELD AND ENJOYED by said ASSIGNEE, its successors and assigns, as fully and entirely as the same would have been held and enjoyed by me had no sale and assignment of said interest been made;

AND I hereby authorize and request the Commissioner of Patents of the United States of America to issue any and all United States patents which may be granted upon said United States applications or any of them, or upon said invention or any part thereof, to said ASSIGNEE;

AND I hereby agree for myself and for my heirs, executors and administrators, to execute without further consideration any further lawful documents and any further assurances, and any provisional, non-provisional, divisional, continuing, reissue, or other applications for patents of any country, that may be deemed necessary by said ASSIGNEE fully to secure to said ASSIGNEE its interest as aforesaid in and to said invention or any part thereof, and in and to said several patents or any of them;

AND I hereby covenant for myself and my legal representatives that I have granted no right or license to make, use or sell said invention, to anyone except said ASSIGNEE, that prior to the execution of this deed my right, title and interest in said invention had not been otherwise encumbered, and that I have not executed and will not execute any instrument in conflict herewith.

PRIORITY CLAIM

I hereby claim foreign priority benefits under 35 U.S.C. §119 (a)-(d) or (f) or 365(b) of any foreign application(s) for patent or inventor's or plant breeder's rights certificate(s), or 365(a) of any PCT international application which designated at least one country other than the United States of America, listed below, and have also identified below, by checking the box, any foreign application for patent, inventor's or plant breeder's rights certificate(s), or any PCT international application having a filing date before that of the application on which priority is claimed:

Priority Claimed

COUNTRY	APPLICATION NUMBER	DATE OF FILING (day, month, year)	PRIORITY NOT CLAIMED	CERTIFIED COPY ATTACHED
				☐ Yes ☐ No
				☐ Yes ☐ No

CLAIM FOR BENEFIT OF PROVISIONAL APPLICATION(S)

I hereby claim the benefit under 35 U.S.C. §119(e) of any United States provisional application(s) listed below.

APPLICATION NUMBER(S)	FILING DATE (day, month, year)
62/118,860	20 February 2015

CLAIM FOR BENEFIT OF EARLIER U.S. APPLICATION(S) UNDER 35 U.S.C. §120

(complete this part only if this is a divisional, continuation or CIP application)

I hereby claim the benefit under 35 U.S.C. §120 of any United States application(s), or 365(c) of any PCT International application designating the United States of America, listed below and, insofar as the subject matter of each of the claims of this application is not disclosed in the prior United States application in the manner provided by the first paragraph of 35 U.S.C. §112, I acknowledge the duty to disclose material information as defined in 37 CFR §1.56 which occurred between the filing date of the prior application and the national or PCT international filing date of this application:

U.S. PARENT APPLICATION OR PCT PARENT NUMBER	PARENT FILING DATE (day, month, year)	STATUS (patent and number, pending, abandoned)

I hereby declare that all statements made herein of my own knowledge are true and that all statements made on information and belief are believed to be true; and further that these statements were made with the knowledge that willful false statements and the like so made are punishable by fine or imprisonment of not more than five (5) years, or both, under Section 1001 of Title 18 of the United States Code and that such willful false statements may jeopardize the validity of the application or any patent issued thereon.

Full name of sole or first inventor Brad Thomas

Inventor's signature Brad Thomas Date 5/8/15

Residence Pleasant Hill, Iowa Country of Residence US

Post Office address 465 Hillside Court

Pleasant Hill, Iowa 50327

STATE OF Iowa

COUNTY OF Marion ss.

This 8th day of May, 2015 before me personally came the above-named **Brad Thomas**, to me personally known as the individual who executed the foregoing assignment, who acknowledged to me that he/she executed the same of his/her own free will for the purposes therein set forth.

Seal

VALERIE LINDENMAN
Commission Number 768349
My Commission Expires
6-1-2017

Valerie Lindenman
(Notary Public)

Full name of second joint inventor Louis Hartke

Inventor's signature Louis Hartke Date 5/5/15

Residence Pella, Iowa Country of Residence US

Post Office address 2005 Highway 163

Pella, Iowa 50219

STATE OF

ss.

COUNTY OF

This 5th day of May, _____ before me personally came the above-named **Louis Hartke**, to me personally known as the individual who executed the foregoing assignment, who acknowledged to me that he/she executed the same of his/her own free will for the purposes therein set forth.

Seal

VALERIE LINDENMAN
Commission Number 788349
My Commission Expires
6-7-2017

Valerie Lindenman
(Notary Public)

Full name of third joint inventor Greg Langenfeld

Inventor's signature Greg Langenfeld Date 5/18/2015

Residence Bettendorf, Iowa Country of Residence US

Post Office address 2425 Baron Court

Bettendorf, Iowa 52722

STATE OF Iowa

ss.

COUNTY OF Marion

This 18th day of May, 2015 before me personally came the above-named **Greg Langenfeld**, to me personally known as the individual who executed the foregoing assignment, who acknowledged to me that he/she executed the same of his/her own free will for the purposes therein set forth.

Seal

Valerie Lindenman
(Notary Public)

VALERIE LINDENMAN
Commission Number 768349
My Commission Expires
6-3-2017

Full name of fourth joint inventor: Matt Hutchinson

Inventor's signature: Date 5/14/15

Residence: Pella, Iowa Country of Residence: US

Post Office address: 410 Highway T14

Pella, Iowa 50219

STATE OF Iowa

COUNTY OF Marion ss.

This 4th day of May, 2015 before me personally came the above-named **Matt Hutchinson**, to me personally known as the individual who executed the foregoing assignment, who acknowledged to me that he/she executed the same of his/her own free will for the purposes therein set forth.

Seal

VALERIE LINDENMAN
Commission Number 768349
My Commission Expires
6-7-2017

(Notary Public)

EXPLANATION OF ACKNOWLEDGEMENT

By signing the declaration, you acknowledge your duty to disclose to the U.S. Patent and Trademark Office information which is material to the examination of this application in accordance with Title 37, Code of Federal Regulations, 1.56. Material information includes any information concerning whether:

The subject matter of this application was known or used by others in the United States before your invention thereof; or

The subject matter of this application was patented or described in any printed publication in any country before your invention thereof or more than one year prior to the date of this application; or

The subject matter of this application was in public use, offered for sale or on sale in the United States more than one year prior to the filing date of this application; or

The subject matter of this application was first patented or made the subject of an inventor's certificate issued in any country foreign to the United States as an application filed by you or your representatives or assigns more than twelve months prior to the date of this application; or

any application for patent or inventor's certificate on the subject matter of this application has been filed by your representatives or assigns in any foreign country.

In addition, you must advise us of the closest prior art (including your own patents and publications) of which you are aware so that we may bring it to the attention of the U.S. Patent and Trademark Office.

This duty to disclose material information continues after the application is filed. During the pendency of this patent application, each person substantially involved in the preparation or prosecution of this patent application, including each inventor, has a duty to disclose to the U.S. Patent and Trademark Office all known information which would be material to patentability. Failure to meet this duty can result in an unenforceable and/or invalid patent.

Any of the above information should be brought to the attention of the U.S. Patent and Trademark Office within three months of filing of this application, or within three months of acquiring such information, whichever is later. Accordingly, please promptly advise us of any of the above information, or any other information that may be material to patentability and is either presently known to you or later becomes known to you during the pendency of this application.

UNITED STATES PATENT AND TRADEMARK OFFICE

UNITED STATES DEPARTMENT OF COMMERCE
United States Patent and Trademark Office
Address: COMMISSIONER FOR PATENTS
P.O. Box 1450
Alexandria, Virginia 22313-1450
www.uspto.gov

APPLICATION NUMBER	FILING or 371(c) DATE	GRP ART UNIT	FIL FEE REC'D	ATTY.DOCKET.NO	TOT CLAIMS	IND CLAIMS
14/691,649	04/21/2015	3652	1600	31681-31	20	2

CONFIRMATION NO. 7913

FILING RECEIPT

OC000000074928485

76656
Patent Docket Department
Armstrong Teasdale LLP
7700 Forsyth Boulevard
Suite 1800
St. Louis, MO 63105

Date Mailed: 05/04/2015

Receipt is acknowledged of this non-provisional patent application. The application will be taken up for examination in due course. Applicant will be notified as to the results of the examination. Any correspondence concerning the application must include the following identification information: the U.S. APPLICATION NUMBER, FILING DATE, NAME OF APPLICANT, and TITLE OF INVENTION. Fees transmitted by check or draft are subject to collection. Please verify the accuracy of the data presented on this receipt. **If an error is noted on this Filing Receipt, please submit a written request for a Filing Receipt Correction. Please provide a copy of this Filing Receipt with the changes noted thereon. If you received a "Notice to File Missing Parts" for this application, please submit any corrections to this Filing Receipt with your reply to the Notice. When the USPTO processes the reply to the Notice, the USPTO will generate another Filing Receipt incorporating the requested corrections**

Inventor(s)

Brad Thomas, Pleasant Hill, IA;
Louis Hartke, Pella, IA;
Greg Langenfeld, Bettendorf, IA;
Matt Hutchinson, Pella, IA;

Applicant(s)

Vermeer Manufacturing Company, Pella, IA

Assignment For Published Patent Application

VERMEER MANUFACTURING COMPANY, Pella, IA

Power of Attorney: None

Domestic Priority data as claimed by applicant

This appln claims benefit of 62/118,860 02/20/2015

Foreign Applications for which priority is claimed (You may be eligible to benefit from the **Patent Prosecution Highway** program at the USPTO. Please see http://www.uspto.gov for more information.) - None.
Foreign application information must be provided in an Application Data Sheet in order to constitute a claim to foreign priority. See 37 CFR 1.55 and 1.76.

Permission to Access - A proper **Authorization to Permit Access to Application by Participating Offices** (PTO/SB/39 or its equivalent) has been received by the USPTO.

If Required, Foreign Filing License Granted: 04/30/2015
The country code and number of your priority application, to be used for filing abroad under the Paris Convention, is **US 14/691,649**

UNITED STATES PATENT AND TRADEMARK OFFICE

UNITED STATES DEPARTMENT OF COMMERCE
United States Patent and Trademark Office
Address: COMMISSIONER FOR PATENTS
P.O. Box 1450
Alexandria, Virginia 22313-1450
www.uspto.gov

APPLICATION NUMBER	FILING OR 371(C) DATE	FIRST NAMED APPLICANT	ATTY. DOCKET NO./TITLE
14/691,649	04/21/2015	Brad Thomas	31681-31

CONFIRMATION NO. 7913

FORMALITIES LETTER

OC000000074928486

76656
Patent Docket Department
Armstrong Teasdale LLP
7700 Forsyth Boulevard
Suite 1800
St. Louis, MO 63105

Date Mailed: 05/04/2015

NOTICE TO FILE MISSING PARTS OF NONPROVISIONAL APPLICATION

FILED UNDER 37 CFR 1.53(b)

Filing Date Granted

Items Required To Avoid Abandonment:

An application number and filing date have been accorded to this application. The item(s) indicated below, however, are missing.

Applicant is given **TWO MONTHS** from the date of this Notice within which to file all required items below to avoid abandonment. Extensions of time may be obtained by filing a petition accompanied by the extension fee under the provisions of 37 CFR 1.136(a).

- Surcharge as set forth in 37 CFR 1.16(f) must be submitted.
  The surcharge is due for any one of:
  - late submission of the basic filing fee, search fee, or examination fee,
  - late submission of inventor's oath or declaration,
  - filing an application that does not contain at least one claim on filing, or
  - submission of an application filed by reference to a previously filed application.

SUMMARY OF FEES DUE:

The fee(s) required within **TWO MONTHS** from the date of this Notice to avoid abandonment is/are itemized below. No entity status discount is in effect. If applicant is qualified for small entity status, a written assertion of small entity status must be submitted to establish small entity status. (See 37 CFR 1.27). If applicant is qualified for micro entity status, an acceptable Certification of Micro Entity Status must be submitted to establish micro entity status. (See 37 CFR 1.29 and forms PTO/SB/15A and 15B.)

- $ **140** surcharge.
- $(**0**) previous unapplied payment amount.
- $ **140** TOTAL FEE BALANCE DUE.

Items Required To Avoid Processing Delays:

Applicant is notified that the above-identified application contains the deficiencies noted below. No period for reply is set forth in this notice for correction of these deficiencies. However, if a deficiency relates to the inventor's oath or declaration, the applicant must file an oath or declaration in compliance with 37 CFR 1.63, or a substitute statement in compliance with 37 CFR 1.64, executed by or with respect to each actual inventor no later than the expiration of the time period set in the "Notice of Allowability" to avoid abandonment. See 37 CFR 1.53(f).

- A properly executed inventor's oath or declaration has not been received for the following inventor(s):
  Brad Thomas
  Louis Hartke
  Greg Langenfeld
  Matt Hutchinson

Replies must be received in the USPTO within the set time period or must include a proper Certificate of Mailing or Transmission under 37 CFR 1.8 with a mailing or transmission date within the set time period. For more information and a suggested format, see Form PTO/SB/92 and MPEP 512.

Replies should be mailed to:

Mail Stop Missing Parts
Commissioner for Patents
P.O. Box 1450
Alexandria VA 22313-1450

Registered users of EFS-Web may alternatively submit their reply to this notice via EFS-Web, including a copy of this Notice and selecting the document description "Applicant response to Pre-Exam Formalities Notice". https://sportal.uspto.gov/authenticate/AuthenticateUserLocalEPF.html

For more information about EFS-Web please call the USPTO Electronic Business Center at **1-866-217-9197** or visit our website at http://www.uspto.gov/ebc.

If you are not using EFS-Web to submit your reply, you must include a copy of this notice.

/hngo/

Office of Data Management, Application Assistance Unit (571) 272-4000, or (571) 272-4200, or 1-888-786-0101

CERTIFICATION AND REQUEST FOR PRIORITIZED EXAMINATION UNDER 37 CFR 1.102(e) (Page 1 of 1)

First Named Inventor:	Brad Thomas	Nonprovisional Application Number (if known):	
Title of Invention:	LOW PROFILE COMPACT TOOL CARRIERS		

APPLICANT HEREBY CERTIFIES THE FOLLOWING AND REQUESTS PRIORITIZED EXAMINATION FOR THE ABOVE-IDENTIFIED APPLICATION.

1. The processing fee set forth in 37 CFR 1.17(i)(1) and the prioritized examination fee set forth in 37 CFR 1.17(c) have been filed with the request. The publication fee requirement is met because that fee, set forth in 37 CFR 1.18(d), is currently $0. The basic filing fee, search fee, and examination fee are filed with the request or have been already been paid. I understand that any required excess claims fees or application size fee must be paid for the application.
2. I understand that the application may not contain, or be amended to contain, more than four independent claims, more than thirty total claims, or any multiple dependent claims, and that any request for an extension of time will cause an outstanding Track I request to be dismissed.
3. The applicable box is checked below:

I. ☑ Original Application (Track One) - Prioritized Examination under § 1.102(e)(1)

i. (a) The application is an original nonprovisional utility application filed under 35 U.S.C. 111(a). This certification and request is being filed with the utility application via EFS-Web.

---OR---

(b) The application is an original nonprovisional plant application filed under 35 U.S.C. 111(a). This certification and request is being filed with the plant application in paper.

ii. An executed inventor's oath or declaration under 37 CFR 1.63 or 37 CFR 1.64 for each inventor, **or** the application data sheet meeting the conditions specified in 37 CFR 1.53(f)(3)(i) is filed with the application.

II. ☐ Request for Continued Examination - Prioritized Examination under § 1.102(e)(2)

i. A request for continued examination has been filed with, or prior to, this form.
ii. If the application is a utility application, this certification and request is being filed via EFS-Web.
iii. The application is an original nonprovisional utility application filed under 35 U.S.C. 111(a), or is a national stage entry under 35 U.S.C. 371.
iv. This certification and request is being filed prior to the mailing of a first Office action responsive to the request for continued examination.
v. No prior request for continued examination has been granted prioritized examination status under 37 CFR 1.102(e)(2).

Signature /Michael J. Vander Molen/	Date 04/21/2015
Name (Print/Typed) Michael J. Vander Molen	Practitioner Registration Number 57,274

Note: *This form must be signed in accordance with 37 CFR 1.33. See 37 CFR 1.4(d) for signature requirements and certifications. Submit multiple forms if more than one signature is required.**

☐ *Total of _____ forms are submitted.

Under the Paperwork Reduction Act of 1995, no persons are required to respond to a collection of information unless it contains a valid OMB control number.

Application Data Sheet 37 CFR 1.76	Attorney Docket Number	31681-31
	Application Number	
Title of Invention	LOW PROFILE COMPACT TOOL CARRIERS	

The application data sheet is part of the provisional or nonprovisional application for which it is being submitted. The following form contains the bibliographic data arranged in a format specified by the United States Patent and Trademark Office as outlined in 37 CFR 1.76.
This document may be completed electronically and submitted to the Office in electronic format using the Electronic Filing System (EFS) or the document may be printed and included in a paper filed application.

Secrecy Order 37 CFR 5.2

☐ Portions or all of the application associated with this Application Data Sheet may fall under a Secrecy Order pursuant to 37 CFR 5.2 (Paper filers only. Applications that fall under Secrecy Order may not be filed electronically.)

Inventor Information:

Inventor 1 Remove

Legal Name

Prefix	Given Name	Middle Name	Family Name	Suffix
	Brad		Thomas	

Residence Information (Select One) ◉ US Residency ◯ Non US Residency ◯ Active US Military Service

City	Pleasant Hill	State/Province	IA	Country of Residence i	US

Mailing Address of Inventor:

Address 1	465 Hillside Court		
Address 2			
City	Pleasant Hill	State/Province	IA
Postal Code	50327	Country i	US

Inventor 2 Remove

Legal Name

Prefix	Given Name	Middle Name	Family Name	Suffix
	Louis		Hartke	

Residence Information (Select One) ◉ US Residency ◯ Non US Residency ◯ Active US Military Service

City	Pella	State/Province	IA	Country of Residence i	US

Mailing Address of Inventor:

Address 1	2005 Highway 163		
Address 2			
City	Pella	State/Province	IA
Postal Code	50219	Country i	US

Inventor 3 Remove

Legal Name

Prefix	Given Name	Middle Name	Family Name	Suffix
	Greg		Langenfeld	

Residence Information (Select One) ◉ US Residency ◯ Non US Residency ◯ Active US Military Service

Under the Paperwork Reduction Act of 1995, no persons are required to respond to a collection of information unless it contains a valid OMB control number.

Application Data Sheet 37 CFR 1.76	Attorney Docket Number	31681-31
	Application Number	
Title of Invention	LOW PROFILE COMPACT TOOL CARRIERS	

City	Bettendorf	**State/Province**	IA	**Country of Residence** i	US

Mailing Address of Inventor:

Address 1	2425 Baron Court		
Address 2			
City	Bettendorf	**State/Province**	IA
Postal Code	52722	**Country** i	US

Inventor 4 Remove

Legal Name

Prefix	Given Name	Middle Name	Family Name	Suffix
	Matt		Hutchinson	

Residence Information (Select One) ◉ US Residency ◯ Non US Residency ◯ Active US Military Service

City	Pella	**State/Province**	IA	**Country of Residence** i	US

Mailing Address of Inventor:

Address 1	410 Highway T14		
Address 2			
City	Pella	**State/Province**	IA
Postal Code	50219	**Country** i	US

All Inventors Must Be Listed - Additional Inventor Information blocks may be generated within this form by selecting the **Add** button. Add

Correspondence Information:

Enter either Customer Number or complete the Correspondence Information section below.
For further information see 37 CFR 1.33(a).

☐ **An Address is being provided for the correspondence Information of this application.**

Customer Number	76656		
Email Address	uspatents@armstrongteasdale.com	Add Email	Remove Email

Application Information:

Title of the Invention	LOW PROFILE COMPACT TOOL CARRIERS		
Attorney Docket Number	31681-31	**Small Entity Status Claimed**	☐
Application Type	Nonprovisional		
Subject Matter	Utility		
Total Number of Drawing Sheets (if any)	7	**Suggested Figure for Publication (if any)**	1

Filing By Reference :

Under the Paperwork Reduction Act of 1995, no persons are required to respond to a collection of information unless it contains a valid OMB control number.

Application Data Sheet 37 CFR 1.76	Attorney Docket Number	31681-31
	Application Number	
Title of Invention	LOW PROFILE COMPACT TOOL CARRIERS	

Only complete this section when filing an application by reference under 35 U.S.C. 111(c) and 37 CFR 1.57(a). Do not complete this section if application papers including a specification and any drawings are being filed. Any domestic benefit or foreign priority information must be provided in the appropriate section(s) below (i.e., "Domestic Benefit/National Stage Information" and "Foreign Priority Information").

For the purposes of a filing date under 37 CFR 1.53(b), the description and any drawings of the present application are replaced by this reference to the previously filed application, subject to conditions and requirements of 37 CFR 1.57(a).

Application number of the previously filed application	Filing date (YYYY-MM-DD)	Intellectual Property Authority or Country

Publication Information:

☐ Request Early Publication (Fee required at time of Request 37 CFR 1.219)

☐ **Request Not to Publish.** I hereby request that the attached application not be published under 35 U.S.C. 122(b) and certify that the invention disclosed in the attached application **has not and will not** be the subject of an application filed in another country, or under a multilateral international agreement, that requires publication at eighteen months after filing.

Representative Information:

Representative information should be provided for all practitioners having a power of attorney in the application. Providing this information in the Application Data Sheet does not constitute a power of attorney in the application (see 37 CFR 1.32).
Either enter Customer Number or complete the Representative Name section below. If both sections are completed the customer Number will be used for the Representative Information during processing.

Please Select One:	◉ Customer Number	○ US Patent Practitioner	○ Limited Recognition (37 CFR 11.9)
Customer Number	76656		

Domestic Benefit/National Stage Information:

This section allows for the applicant to either claim benefit under 35 U.S.C. 119(e), 120, 121, or 365(c) or indicate National Stage entry from a PCT application. Providing this information in the application data sheet constitutes the specific reference required by 35 U.S.C. 119(e) or 120, and 37 CFR 1.78.
When referring to the current application, please leave the application number blank.

Prior Application Status	Pending		Remove
Application Number	Continuity Type	Prior Application Number	Filing Date (YYYY-MM-DD)
	Claims benefit of provisional	62118860	2015-02-20

Additional Domestic Benefit/National Stage Data may be generated within this form by selecting the **Add** button. Add

Foreign Priority Information:

Application Data Sheet 37 CFR 1.76	Attorney Docket Number	31681-31
	Application Number	
Title of Invention	LOW PROFILE COMPACT TOOL CARRIERS	

This section allows for the applicant to claim priority to a foreign application. Providing this information in the application data sheet constitutes the claim for priority as required by 35 U.S.C. 119(b) and 37 CFR 1.55(d). When priority is claimed to a foreign application that is eligible for retrieval under the priority document exchange program (PDX) [i] the information will be used by the Office to automatically attempt retrieval pursuant to 37 CFR 1.55(h)(1) and (2). Under the PDX program, applicant bears the ultimate responsibility for ensuring that a copy of the foreign application is received by the Office from the participating foreign intellectual property office, or a certified copy of the foreign priority application is filed, within the time period specified in 37 CFR 1.55(g)(1).

Remove

Application Number	Country [i]	Filing Date (YYYY-MM-DD)	Access Code [i] (if applicable)

Additional Foreign Priority Data may be generated within this form by selecting the **Add** button. Add

Statement under 37 CFR 1.55 or 1.78 for AIA (First Inventor to File) Transition Applications

☐ This application (1) claims priority to or the benefit of an application filed before March 16, 2013 and (2) also contains, or contained at any time, a claim to a claimed invention that has an effective filing date on or after March 16, 2013.
NOTE: By providing this statement under 37 CFR 1.55 or 1.78, this application, with a filing date on or after March 16, 2013, will be examined under the first inventor to file provisions of the AIA.

Authorization to Permit Access:

☒ Authorization to Permit Access to the Instant Application by the Participating Offices

Under the Paperwork Reduction Act of 1995, no persons are required to respond to a collection of information unless it contains a valid OMB control number.

Application Data Sheet 37 CFR 1.76	Attorney Docket Number	31681-31
	Application Number	
Title of Invention	LOW PROFILE COMPACT TOOL CARRIERS	

If checked, the undersigned hereby grants the USPTO authority to provide the European Patent Office (EPO), the Japan Patent Office (JPO), the Korean Intellectual Property Office (KIPO), the World Intellectual Property Office (WIPO), and any other intellectual property offices in which a foreign application claiming priority to the instant patent application is filed access to the instant patent application. See 37 CFR 1.14(c) and (h). This box should not be checked if the applicant does not wish the EPO, JPO, KIPO, WIPO, or other intellectual property office in which a foreign application claiming priority to the instant patent application is filed to have access to the instant patent application.

In accordance with 37 CFR 1.14(h)(3), access will be provided to a copy of the instant patent application with respect to: 1) the instant patent application-as-filed; 2) any foreign application to which the instant patent application claims priority under 35 U.S.C. 119(a)-(d) if a copy of the foreign application that satisfies the certified copy requirement of 37 CFR 1.55 has been filed in the instant patent application; and 3) any U.S. application-as-filed from which benefit is sought in the instant patent application.

In accordance with 37 CFR 1.14(c), access may be provided to information concerning the date of filing this Authorization.

Applicant Information:

Providing assignment information in this section does not substitute for compliance with any requirement of part 3 of Title 37 of CFR to have an assignment recorded by the Office.

Applicant 1 Remove

If the applicant is the inventor (or the remaining joint inventor or inventors under 37 CFR 1.45), this section should not be completed. The information to be provided in this section is the name and address of the legal representative who is the applicant under 37 CFR 1.43; or the name and address of the assignee, person to whom the inventor is under an obligation to assign the invention, or person who otherwise shows sufficient proprietary interest in the matter who is the applicant under 37 CFR 1.46. If the applicant is an applicant under 37 CFR 1.46 (assignee, person to whom the inventor is obligated to assign, or person who otherwise shows sufficient proprietary interest) together with one or more joint inventors, then the joint inventor or inventors who are also the applicant should be identified in this section.

Clear

○ Assignee ○ Legal Representative under 35 U.S.C. 117 ○ Joint Inventor

◉ Person to whom the inventor is obligated to assign. ○ Person who shows sufficient proprietary interest

If applicant is the legal representative, indicate the authority to file the patent application, the inventor is:

Name of the Deceased or Legally Incapacitated Inventor :

If the Applicant is an Organization check here. ☒

Organization Name	Vermeer Manufacturing Company		
Mailing Address Information:			
Address 1	1210 Vermeer Road East		
Address 2			
City	Pella	**State/Province**	IA
Country i	US	Postal Code	50219
Phone Number		Fax Number	

Under the Paperwork Reduction Act of 1995, no persons are required to respond to a collection of information unless it contains a valid OMB control number.

Application Data Sheet 37 CFR 1.76	Attorney Docket Number	31681-31
	Application Number	
Title of Invention	LOW PROFILE COMPACT TOOL CARRIERS	

Email Address	

Additional Applicant Data may be generated within this form by selecting the Add button. Add

Assignee Information including Non-Applicant Assignee Information:

Providing assignment information in this section does not subsitute for compliance with any requirement of part 3 of Title 37 of CFR to have an assignment recorded by the Office.

Assignee 1

Complete this section if assignee information, including non-applicant assignee information, is desired to be included on the patent application publication . An assignee-applicant identified in the "Applicant Information" section will appear on the patent application publication as an applicant. For an assignee-applicant, complete this section only if identification as an assignee is also desired on the patent application publication.

Remove

If the Assignee or Non-Applicant Assignee is an Organization check here. ☒

Organization Name	Vermeer Manufacturing Company

Mailing Address Information For Assignee including Non-Applicant Assignee:

Address 1	1210 Vermeer Road East		
Address 2			
City	Pella	**State/Province**	IA
Country i	US	Postal Code	50219
Phone Number		Fax Number	
Email Address			

Additional Assignee or Non-Applicant Assignee Data may be generated within this form by selecting the Add button. Add

Signature:

Remove

NOTE: This form must be signed in accordance with 37 CFR 1.33. See 37 CFR 1.4 for signature requirements and certifications

Signature	/Michael J. Vander Molen/			Date (YYYY-MM-DD)	2015-04-21
First Name	Michael J.	Last Name	Vander Molen	Registration Number	57274

Additional Signature may be generated within this form by selecting the Add button. Add

Application Data Sheet 37 CFR 1.76	Attorney Docket Number	31681-31
	Application Number	
Title of Invention	LOW PROFILE COMPACT TOOL CARRIERS	

This collection of information is required by 37 CFR 1.76. The information is required to obtain or retain a benefit by the public which is to file (and by the USPTO to process) an application. Confidentiality is governed by 35 U.S.C. 122 and 37 CFR 1.14. This collection is estimated to take 23 minutes to complete, including gathering, preparing, and submitting the completed application data sheet form to the USPTO. Time will vary depending upon the individual case. Any comments on the amount of time you require to complete this form and/or suggestions for reducing this burden, should be sent to the Chief Information Officer, U.S. Patent and Trademark Office, U.S. Department of Commerce, P.O. Box 1450, Alexandria, VA 22313-1450. DO NOT SEND FEES OR COMPLETED FORMS TO THIS ADDRESS. **SEND TO: Commissioner for Patents, P.O. Box 1450, Alexandria, VA 22313-1450.**

LOW PROFILE COMPACT TOOL CARRIERS

CROSS-REFERENCE TO RELATED APPLICATION

[0001] This application claims the benefit of U.S. Provisional Patent Application No. 62/118,860, filed February 20, 2015, which is incorporated herein by reference in its entirety.

FIELD OF THE DISCLOSURE

[0002] The field of the disclosure relates to compact tool carriers having a loader mounted to a low-profile mainframe.

BACKGROUND

[0003] Compact tool carriers are tool-mounted machines that are capable of working in tight spaces for utility or do-it-yourself home projects. Compact tool carriers are walk-behind units or include a platform on which the operator may stand during use. Compact tool carriers are generally defined (e.g., ISO 6165 (2012) and SAE J2752) as "a self-propelled crawler or wheeled machine having an operating mass of less than 1500 kg with a rigid frame, having either a pedestrian operating position or a standing operator platform at the rear of the machine and either front-mounted interchangeable equipment or lift arms with an attachment

bracket capable of coupling to interchangeable, front-mounted attachments." The tool carriers may be attached to a variety of interchangeable tools such as buckets, augers, forks, stump grinders, tillers, rollers and the like.

[0004] Compact tool carriers may be distinguished from much larger conventional skid steers in which an operator is seated in the operating position. Compact tool carriers pose difficulty in design relative to full-size skid steers due to variation in weight, complexity and size.

[0005] A continuing need exists for compact tool carriers with a relatively low-profile, compact design and/or that are characterized by a more effective loader lifting profile.

[0006] This section is intended to introduce the reader to various aspects of art that may be related to various aspects of the disclosure, which are described and/or claimed below. This discussion is believed to be helpful in providing the reader with background information to facilitate a better understanding of the various aspects of the present disclosure. Accordingly, it should be understood that these statements are to be read in this light, and not as admissions of prior art.

SUMMARY

[0007] One aspect of the present disclosure is directed to a compact tool carrier configured for

standing or walk-behind operator control. The carrier has a mass of less than about 1500 kg and includes a loader having an arm and a linkage pivotally attached to the loader arm. An actuator is pivotally attached to the loader arm. The carrier includes a control station having operator controls for propelling the compact tool carrier forward and for raising and lowering the loader. The control station is configured for remote operation or is mounted toward the rear of the compact tool carrier and is adapted to allow for standing or walk-behind operation.

[0008] Another aspect of the present disclosure is directed to a compact tool carrier. The carrier comprises a loader and a mainframe for supporting the loader. The mainframe has a first side and a second side with each side having a top and a bottom. The first side of the mainframe has at least two pivot points relative to the loader. The carrier includes a drive mechanism comprising tracks or wheels for propelling the apparatus over a supporting surface. The drive mechanism is attached to the mainframe about a rotational axis. The compact tool carrier has a bottom at which the drive mechanism contacts the supporting surface. The rotational axis and bottom of the compact tool carrier are separated by a vertical distance D1. The rotational axis and each pivot point are separated by a vertical distance. Each vertical distance between the rotational axis and a pivot point is less than 1.5 times D1.

[0009] Various refinements exist of the features noted in relation to the above-mentioned aspects

of the present disclosure. Further features may also be incorporated in the above-mentioned aspects of the present disclosure as well. These refinements and additional features may exist individually or in any combination. For instance, various features discussed below in relation to any of the illustrated embodiments of the present disclosure may be incorporated into any of the above-described aspects of the present disclosure, alone or in any combination.

BRIEF DESCRIPTION OF THE DRAWINGS

[0010] Figure 1 is a perspective view of a compact tool carrier with the loader in a down position;

[0011] Figure 2 is a side view of the compact tool carrier with the loader in a down position;

[0012] Figure 3 is a side view of the compact tool carrier with the loader in a raised position;

[0013] Figure 4 is a perspective view of a mainframe of the compact tool carrier;

[0014] Figure 5 is a side view of the mainframe and loader of the compact tool carrier;

[0015] Figure 6 is a cross-section side view of the mainframe; and

[0016] Figure 7 is an exploded perspective view of the mainframe and an upper frame of the compact tool carrier.

[0017] Corresponding reference characters indicate corresponding parts throughout the drawings.

DETAILED DESCRIPTION

[0018] An embodiment of a compact tool carrier is generally referred as "5" in Figure 1. The compact tool carrier 5 includes a loader 8 supported by a mainframe 10. The loader 8 includes an attachment plate 12 for interchangeably attaching any one of a number of tools (not shown). In this regard, such interchangeable tools do not form part of the compact tool carrier 5 unless stated otherwise. The attachment plate 12 is connected to an actuator 14 for tilting of tools connected to the attachment plate 12. The loader 8 has a first arm 15a and a second arm 15b generally opposite the first arm 15a. Each arm 15a, 15b may be a single weldment or may include various components attached by fasteners (e.g., nuts and bolts). The first and second arms 15a, 15b each include a bracket portion 17a, 17b (Fig. 1) for fastening various linkages.

[0019] As used herein, "compact tool carrier" refers to machines that are self-propelled and are capable of carrying interchangeable equipment and that generally have a mass (not including the interchangeable tool) of less than about 1500 kg (about 3307 lb). Use of the term "compact tool carrier" herein

is intended to exclude full size skid steers (e.g., seat-operated units) due to a large variation in weight, complexity and size. In some embodiments, the compact tool carrier 5 meets the definition of a compact tool carrier provided in ISO 6165 (2012) and SAE J2752 set forth above, both standards being incorporated herein by reference for all relevant and consistent purposes.

[0020] The compact tool carrier 5 includes a longitudinal axis A that is parallel to the direction of travel of the carrier (i.e., parallel to its length). The compact tool carrier 5 is generally longitudinally symmetrical (i.e., relative to the longitudinal axis A) in that several components have a corresponding component with the same function opposite the component (i.e., across the axis A). Corresponding components of the pair may be indicated herein by use of a reference number followed by "A" and "B" and may be referred to as a "first" component and a "second" component, respectively. While the compact tool carrier 5 may be described herein with reference to the components of one side of the compact tool carrier 5, any component designated by "A" or "B" herein or shown in Figures 1-7 includes a corresponding component with the same function opposite the component.

[0021] The compact tool carrier 5 includes a drive mechanism 18 attached to the mainframe 10. In the illustrated embodiment, the drive mechanism 18 is directly mounted (i.e., connected without intermediary parts) to the mainframe 10 by way of drive sprocket 22 connected to a hub 26 (Fig. 2). The hub 26 is attached

to a shaft (not shown) that extends through a drive opening 30 (Fig. 4) of the mainframe 10. The sprocket 22, hub 26 and shaft (not shown) rotate about a rotational axis R (Fig. 5). As shown, the drive mechanism 18 includes tracks 34. In other embodiments, the drive mechanism 10 includes wheels.

[0022] The compact tool carrier 5 includes a control station 36 (Fig. 1) which may include controls (not all controls being shown) for propelling the compact tool carrier 5 forward and/or for raising and lowering the loader 8. The control station 36 may be mounted toward the rear of the compact tool carrier 5 (i.e., opposite the attachment plate 12) and is generally adapted to allow for standing or walk-behind operation. As used herein, "standing operation" generally refers to operation in which the operator stands on a platform attached to the compact tool carrier while "walk-behind operation" generally refers to operation in which the operator stands on the surface supporting the compact tool carrier 5. In the illustrated embodiment, the compact tool carrier 5 includes an operator platform 37 (Fig. 2).

[0023] In embodiments in which the compact tool carrier 5 includes an operator platform 37 for standing operation, the difference between the height of the control station 36 (e.g., as measured from the highest control for operating the loader or propelling the apparatus forward) and the platform 37 may be at least about 90 cm (e.g., from about 90 cm to about 130 cm). In embodiments in which the operator walks behind

the compact tool carrier 5, the control station 36 may be at least about 90 cm (e.g., from about 90 cm to about 130 cm) from the surface supporting the compact tool carrier. Such a range generally complies with the zones of comfort and reach for controls in earth-moving equipment set forth in ISO 6682 (2008) as determined from the physical dimensions of operators and minimum operator space envelope as set forth in ISO 3411 (2007), both of which are incorporated herein by reference for all relevant and consistent purposes.

[0024] In the illustrated embodiment, the control station 36 is attached to an upper frame 39 (Fig. 7) that is attached and supported by the mainframe 10. In other embodiments, rather than being integrated as one unit in the compact tool carrier 5, the control station 36 is separate from the body (e.g., mainframe) of the carrier and is operated remotely. In such embodiments, the control station 36 may be wired or may operate wirelessly to propel the carrier 5 and/or raise and lower the loader 8.

[0025] The mainframe 10 includes a first side 38a and a second side 38b generally opposite the first side 38a. As used herein, the term “mainframe” generally refers to a single weldment to which the loader 8 is attached, optionally through one or more pivotal linkages. The mainframe 10 includes bracket portions 40a, 40b (Fig. 4) through which various pivot linkages are attached. In the illustrated embodiment, the engine (not shown) and the drive mechanism 10 comprising tracks or wheels are directly connected to the mainframe 10.

[0026] The first loader arm 15a is pivotally connected to the first side 38a of the mainframe 10, and the second loader arm 15b is pivotally connected to the second side 38b of the mainframe 10. The loader arms 15a, 15b and sides 38a, 38b of the mainframe 10 each include three pivot points for pivoting the loader 8 relative to the mainframe 10. The first side 38a of the mainframe 10 includes a forward pivot point P_1 (Fig. 5) a rear pivot point P_3 and a central pivot point P_2 between the forward pivot point P_1 and the rear pivot point P_3. Similarly, the first arm 15a includes a forward pivot point P_4, a rear pivot point P_6 and a central pivot point P_5 between the forward pivot point P_4 and the rear pivot point P_6. The compact tool carrier 5 includes a first forward linkage 46a attached to the first side 38a of the mainframe 10 at its forward pivot point P_1 and attached to the first arm 15a at its forward pivot point P_4. A first rear linkage 50a is attached to the first side 38a of the mainframe 10 at its rear pivot point P_3 and is attached to the first arm 15a of the loader 8 at its rear pivot point P_6. While the carrier 5 is shown with two loader linkages 46a, 50a on each side of the carrier 5, in other embodiments the carrier 5 includes a single linkage.

[0027] An actuator 54, shown as a hydraulic cylinder, is attached to the first side 38a of the mainframe 10 at its center pivot point P_4 and is attached to the loader arm 15a at its center pivot point P_5 to raise the loader 8. The compact tool carrier 5 may include a single actuator 54, or, as in other embodiments, a second actuator (not shown) is connected to the second side 38b (Fig. 4) of the mainframe 10 and

the second arm 15b (Fig. 1). The actuator 54 is powered to raise the loader 8 and, in some embodiments, is also powered to lower the loader 8 (as opposed to a one-way actuator lowered by gravity alone).

[0028] The second side 38b (Fig. 4) of the mainframe 10 may include a forward pivot point and a rear pivot point to which a second forward linkage 46b (Fig. 1) and second rear linkage (not shown) are respectively attached. The second arm 15b may also include a forward pivot point and rear pivot point to which the second forward linkage 46b and second rear linkage are attached. In embodiments in which the compact tool carrier 5 includes a second actuator (not shown), the second side 38b of the mainframe 10 includes a central pivot point between its forward pivot point and its rear pivot point, and the second arm 15b also includes a central pivot point between its forward pivot point and its rear pivot point. The second cylinder may be attached to the central pivot point of the second side 38b of the mainframe 10 and the central pivot point of the second arm 15b.

[0029] In some embodiments, the first and second ends 38a, 38b of the mainframe 10 and the first and second loader arms 15a, 15b do not include more than three pivot points at which the mainframe 10 and loader 8 pivot relative to each other. While the actuator 54 is shown as being attached between the other two linkages 46a, 50a, in other embodiments the actuator 54 is forward to both linkages 46a, 50a or rearward to both linkages 46a, 50a. Further, each side of the carrier 5 having an

actuator 54 may include a single linkage rather than two linkages.

[0030] In some embodiments, the mainframe 10 is characterized by a relatively low profile (i.e., the pivot points are positioned relatively low on the mainframe allowing its height to be reduced). The rotational axis R (Fig. 5) and the bottom of the compact tool carrier 5 (Fig. 2) are separated by a distance D1. Generally, the bottom of the compact tool carrier 5 corresponds to the point at which the drive mechanism 18 contacts the surface supporting the compact tool carrier 5. The rotational axis R and the forward pivot point P_1 of the first side 38a of the mainframe 10 are separated by a vertical distance D2. The rotational axis R and the rear pivot point P_3 are separated by a vertical distance D3. The rotational axis R and the central pivot point P_4 are separated by a vertical distance D4. Each of D2, D3 and D4 is less than about 1.5 times D1 (1.5xD1). In some embodiments, each of D2, D3 and D4 is less than D1 or even less than about 0.75 times D1 (0.75xD1).

[0031] The mainframe 10 profile may also be expressed relative to the distance D5 between the rotational axis R (Fig. 5) and the bottom 57 of the mainframe 10. Each of D2, D3 and D4 is less than about twice D5 (2xD5). In some embodiments, each of D2, D3 and D4 is less than about 1.75 times D5 (1.75xD5) or less than about 1.5 times D5 (1.5XD5). P2 and P3 may be relatively lower than P1 and their distances D3, D4 from the rotational axis R may be even less than about 1.25 times D5 (1.25xD5). The distance D6 between the top 59

of the first side 38a of the mainframe 10 and the highest pivot point (P_1 in the illustrated embodiment), is less than about 1.5 times D5, less than about D5 or less than about 0.75 times D5.

[0032] The second side 38b (Fig. 1) of the mainframe 10 may have a similar pivot point arrangement. The rotational axis R and the forward pivot point of the second side 38b are separated by a vertical distance D2′ (not shown). The rotational axis R and the rear pivot point of the second side are separated by a vertical distance D3′ (not shown). The rotational axis R and the central pivot point (if any) of the second side 38b of mainframe 10 are separated by a vertical distance D4′ (not shown). Each of D2′, D3′ and D4′ is less than about 1.5 times D1 (1.5xD1) or less than D1 or even less than about 0.75 times D1 (0.75xD1). The rotational axis R and the bottom of the second side 38b of the mainframe 10 are separated by a vertical distance D5′ (not shown). Each of D2′, D3′ and D4′ is less than twice D5′ (2xD5′) or less than about 1.75 times D5′ (1.75xD5′) or less than about 1.5 times D5′ (1.5XD5′). D3′ and D4′ may be even less than about 1.25 times D5′ (1.25xD5′). The distance D6′ between the top of the second side 38b of the mainframe 10 and the highest pivot point is less than about 1.5 times D5′, less than about D5′ or less than about 0.75 times D5′.

[0033] The compact tool carrier 5 includes an engine (not shown) for propelling the drive mechanism 18. As shown in Figure 6, the engine may be mounted to an engine bracket 60 that forms part of the mainframe 10.

The engine may drive a hydraulic pump that powers hydraulic motors (not shown) which drive the drive mechanism 18 (Fig. 1) and which provide hydraulic power to actuator 54. The mainframe 10 includes a reservoir 64 for storing and cycling of hydraulic fluid.

[0034] Compared to conventional compact tool carriers, embodiments of the compact tool carrier 5 described above have several advantages. By positioning the pivot points relatively low on the mainframe 10, the mass of the mainframe 10 and the resulting cost of the carrier 5 may be reduced. Further, such a low-profile mainframe 10 improves visibility for the operator and allows the center of gravity of the carrier 5 to be lowered which improves its stability. In embodiments in which the carrier 5 includes an actuator 54 (Fig. 5) for lifting the loader 8 that is disposed between forward linkage 46a and a rear linkage 50a on at least one side 38a, 38b of the mainframe 10, the loader 8 is characterized by an travel path in which the loader travels vertically rather than over a radial path. The vertical travel path of the loader 8 is more effective relative to conventional travel paths for compact tool carriers 5 as the carrier 5 may operate closer to other structures.

[0035] As used herein, the terms “about,” “substantially,” “essentially” and “approximately” when used in conjunction with ranges of dimensions, concentrations, temperatures or other physical or chemical properties or characteristics is meant to cover variations that may exist in the upper and/or lower

limits of the ranges of the properties or characteristics, including, for example, variations resulting from rounding, measurement methodology or other statistical variation.

[0036] When introducing elements of the present disclosure or the embodiment(s) thereof, the articles "a", "an", "the" and "said" are intended to mean that there are one or more of the elements. The terms "comprising," "including," “containing” and "having" are intended to be inclusive and mean that there may be additional elements other than the listed elements. The use of terms indicating a particular orientation (e.g., "top", "bottom", "side", etc.) is for convenience of description and does not require any particular orientation of the item described.

[0037] As various changes could be made in the above constructions and methods without departing from the scope of the disclosure, it is intended that all matter contained in the above description and shown in the accompanying drawing[s] shall be interpreted as illustrative and not in a limiting sense.

WHAT IS CLAIMED IS:

1. A compact tool carrier configured for standing or walk-behind operator control and having a mass of less than about 1500 kg, the compact tool carrier comprising:

a loader having an arm;

a linkage pivotally attached to the loader arm;

an actuator pivotally attached to the loader arm; and

a control station having operator controls for propelling the compact tool carrier forward and for raising and lowering the loader, the control station being configured for remote operation or being mounted toward the rear of the compact tool carrier and adapted to allow for standing or walk-behind operation.

2. The compact tool carrier as set forth in claim 1 comprising a mainframe for supporting the loader, the mainframe having a first side and a second side, the linkage and actuator each being pivotally attached to the first side of the mainframe.

3. The compact tool carrier as set forth in 2 wherein the mainframe incorporates a single weldment.

4. The compact tool carrier as set forth in claim 2 wherein the loader arm is a first loader arm and the linkage is a first linkage, the loader comprising a second loader arm and the compact tool carrier comprising a second linkage pivotally attached to the second end of

the mainframe and pivotally attached to the second loader arm.

5. The compact tool carrier as set forth in claim 4 wherein the actuator is a first actuator, the compact tool carrier comprising a second actuator, the second actuator being pivotally attached to the second end of the mainframe and pivotally attached to the second loader arm.

6. The compact tool carrier as set forth in claim 2 comprising a drive mechanism comprising tracks or wheels, the drive mechanism being attached to the mainframe.

7. The compact tool carrier as set forth in claim 2 comprising an engine to propel a drive mechanism, the engine being attached to the mainframe.

8. The compact tool carrier as set forth in claim 1 wherein the actuator is a hydraulic cylinder.

9. The compact tool carrier as set forth in claim 1 wherein each loader arm incorporates a single weldment.

10. The compact tool carrier as set forth in claim 1 wherein the control station is mounted toward the rear of the compact tool carrier, the compact tool carrier comprising an operator platform for standing operation of the compact tool carrier, the difference between the height of the control station and the height of the platform being at least 90 cm.

11. The compact tool carrier as set forth in claim 1 wherein the control station is mounted toward the rear of the compact tool carrier, and the height of the control station from a surface supporting the compact tool carrier is at least 90 cm.

12. A method for operating the compact tool carrier as set forth in claim 1, the method comprising standing behind the compact tool carrier and operating the control station to propel the compact tool carrier forward and/or raise or lower the loader.

13. The method as set forth in claim 12 wherein the control station is operated while standing on an operator platform or while standing on a surface supporting the compact tool carrier.

14. A compact tool carrier comprising:

a loader;

a mainframe for supporting the loader, the mainframe having a first side and a second side, each side having a top and a bottom, the first side of the mainframe having at least two pivot points relative to the loader; and

a drive mechanism comprising tracks or wheels for propelling the apparatus over a supporting surface, the drive mechanism being attached to the mainframe about a rotational axis, the compact tool carrier having a bottom at which the drive mechanism contacts the supporting surface, the rotational axis and bottom of the compact tool carrier being separated by a vertical

distance D1, the rotational axis and each pivot point being separated by a vertical distance, each vertical distance between the rotational axis and a pivot point being less than 1.5 times D1.

15. The compact tool carrier as set forth in claim 14 wherein the mainframe comprises two pivot points and the carrier includes an actuator pivotally attached to the mainframe at one of the pivot points, the actuator being pivotally attached to the loader.

16. The compact tool carrier as set forth in claim 15 comprising a linkage pivotally attached to the mainframe at one of the pivot points and being pivotally attached to the loader, the mainframe comprising a pivot point at which the linkage is attached and a pivot point at which the actuator is attached, the rotational axis and the pivot point at which the linkage is attached being separated by a vertical distance D2, the rotational axis and the pivot point at which the actuator is attached being separated by a vertical distance D3, both D2 and D3 being less than 1.5 times D1.

17. The compact tool carrier as set forth in claim 16 wherein the second side of the mainframe comprises two pivot points, each vertical distance between the rotational axis and a pivot point being less than 1.5 times D1.

18. The compact tool carrier as set forth in claim 16 wherein the rotational axis and the bottom of the first side of the mainframe are separated by a

vertical distance D5, both D2 and D3 being less than twice D5.

19. The compact tool carrier as set forth in claim 18 wherein the first side of the mainframe comprises a top most pivot point, the top most pivot point and the top of the first side of the mainframe being separated by a vertical distance D6, D6 being less than about 1.5 times D5.

20. The compact tool carrier as set forth in claim 14 comprising a control station having operator controls for propelling the compact tool carrier forward and for raising and/or lowering the loader, the control station being mounted toward the rear of the compact tool carrier and adapted to allow for standing or walk-behind operation.

ABSTRACT

Compact tool carriers having a loader mounted to a low-profile mainframe are disclosed. In some embodiments, the pivot points of the mainframe about which the loader is pivoted are low relative to the mainframe to reduce the mainframe size.

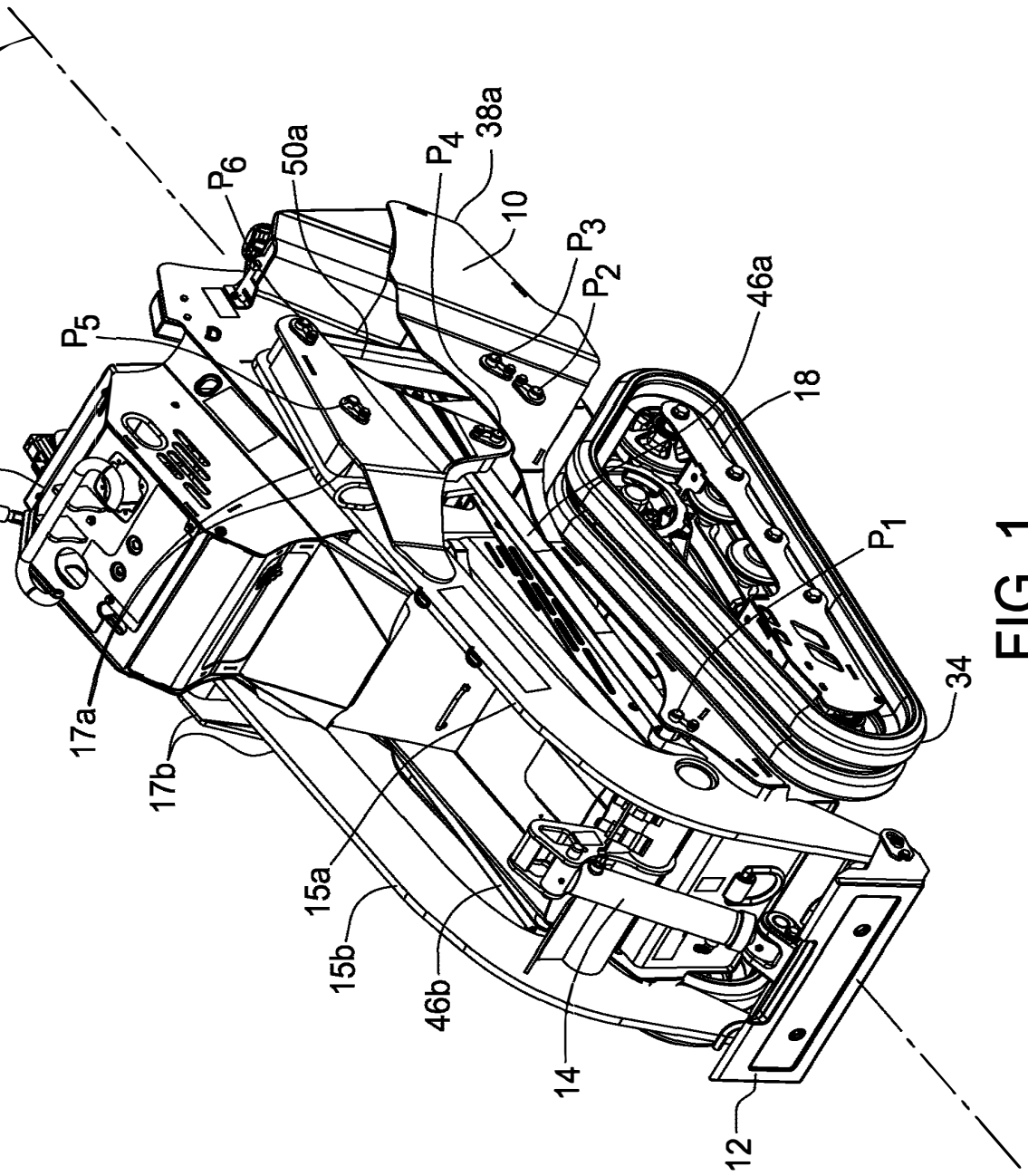

FIG. 1

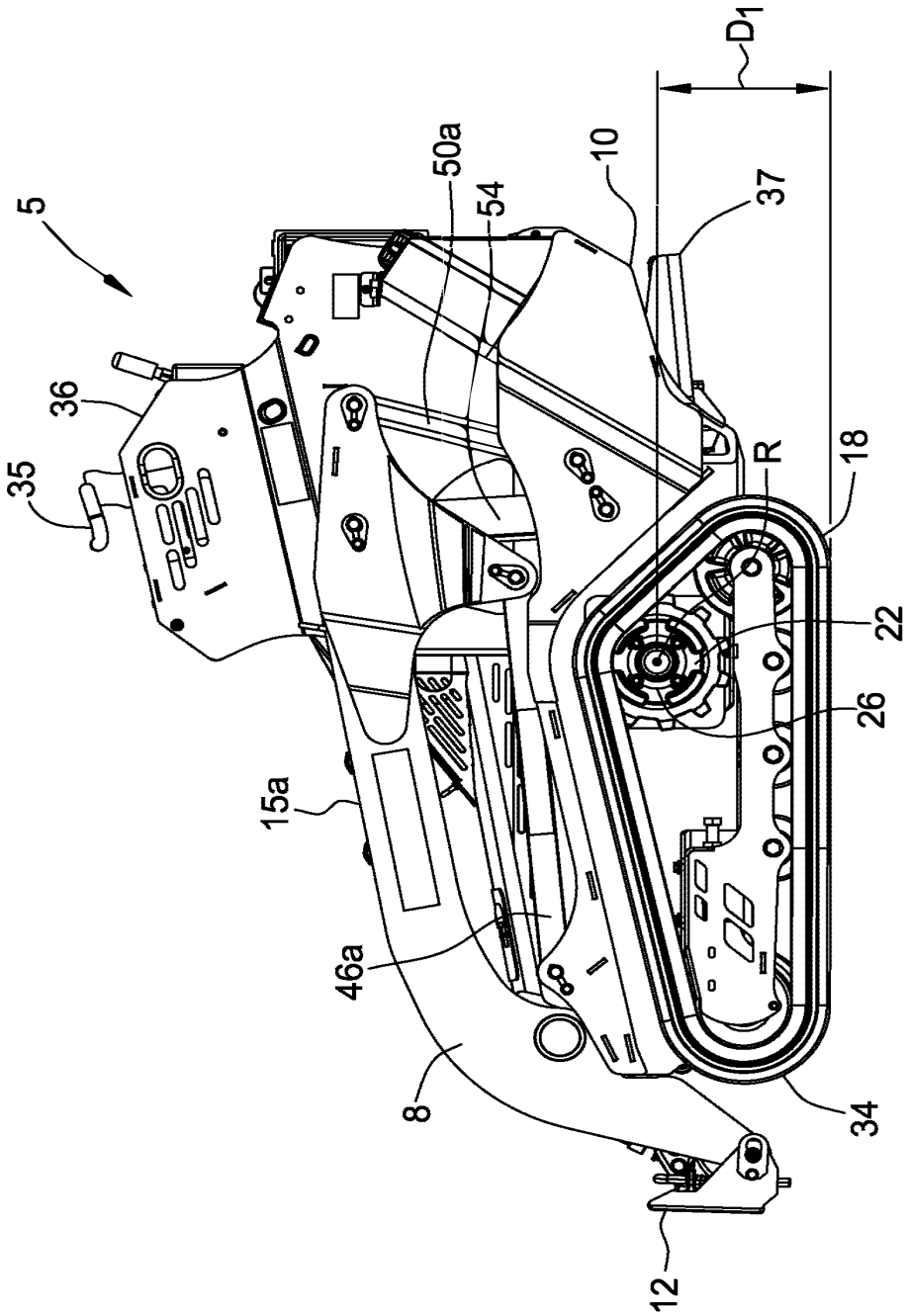

FIG. 2

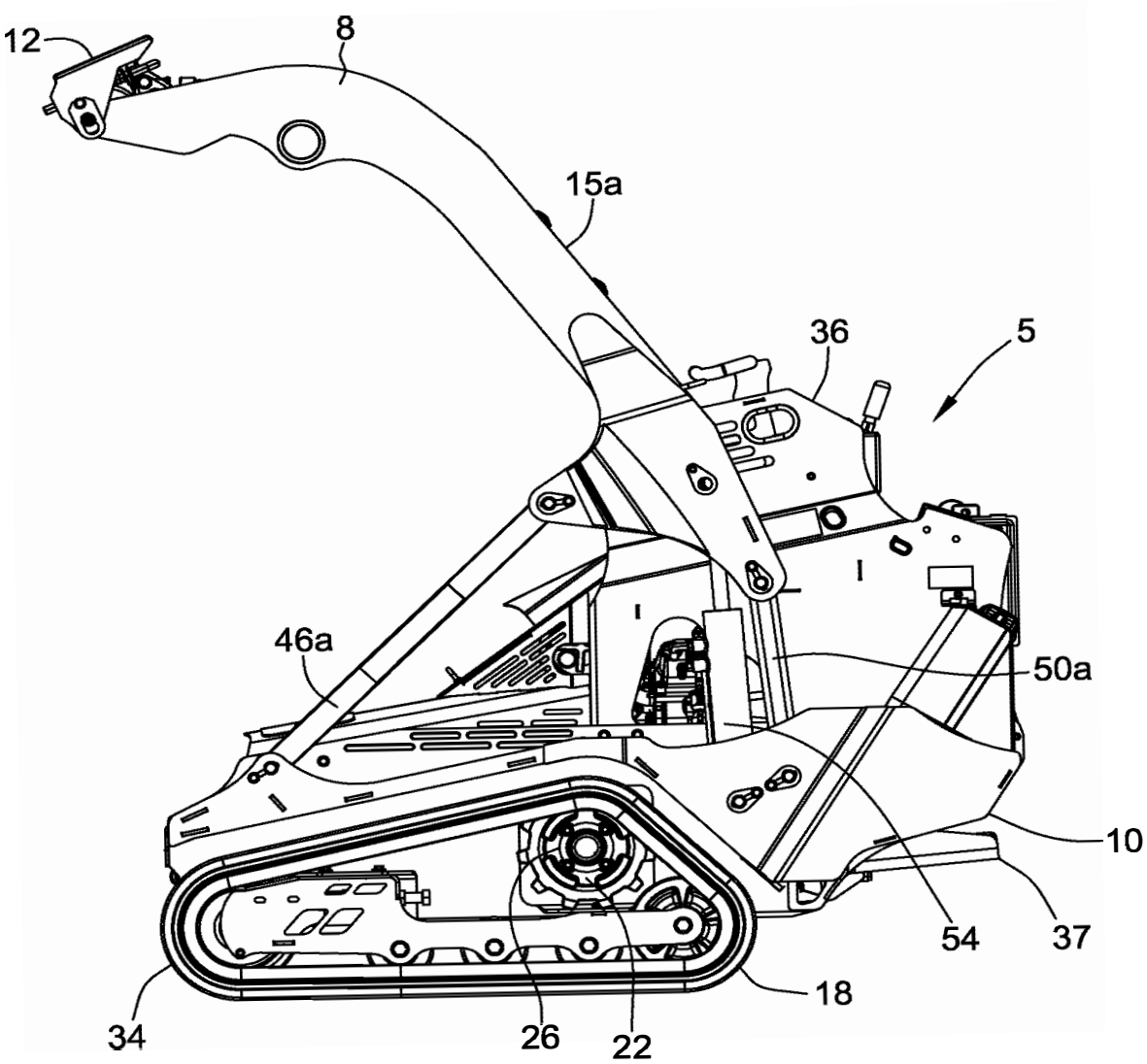

FIG. 3

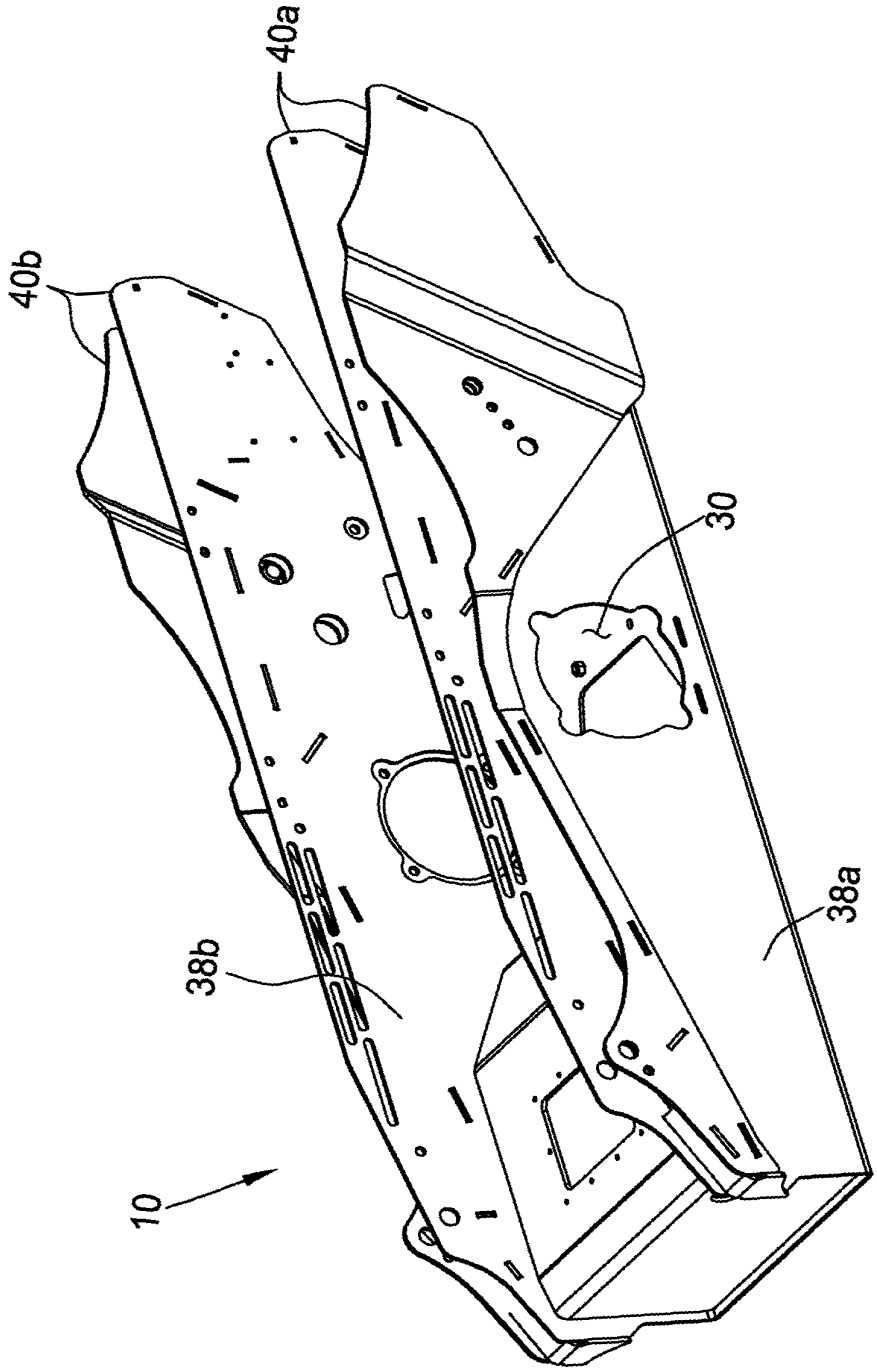

FIG. 4

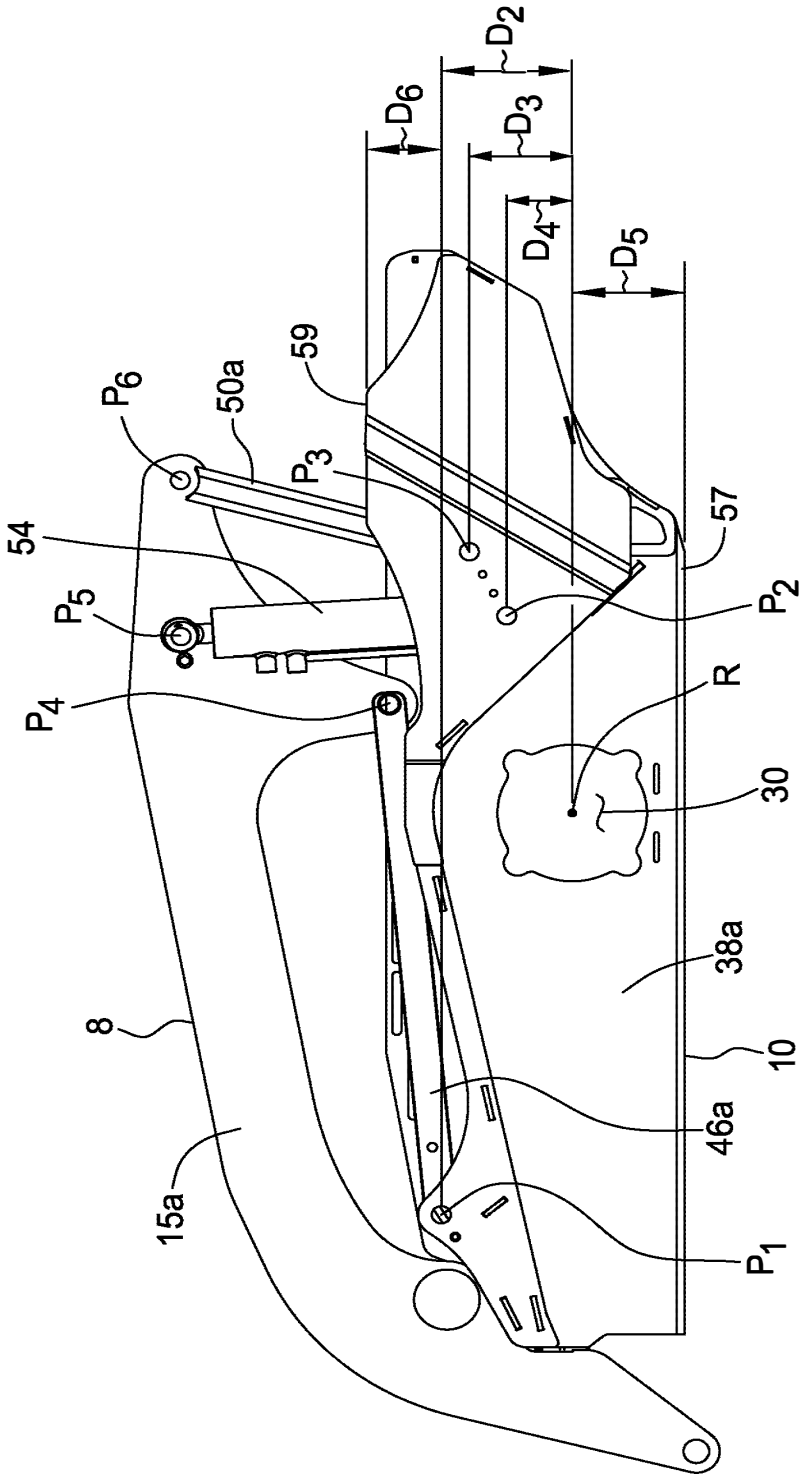

FIG. 5

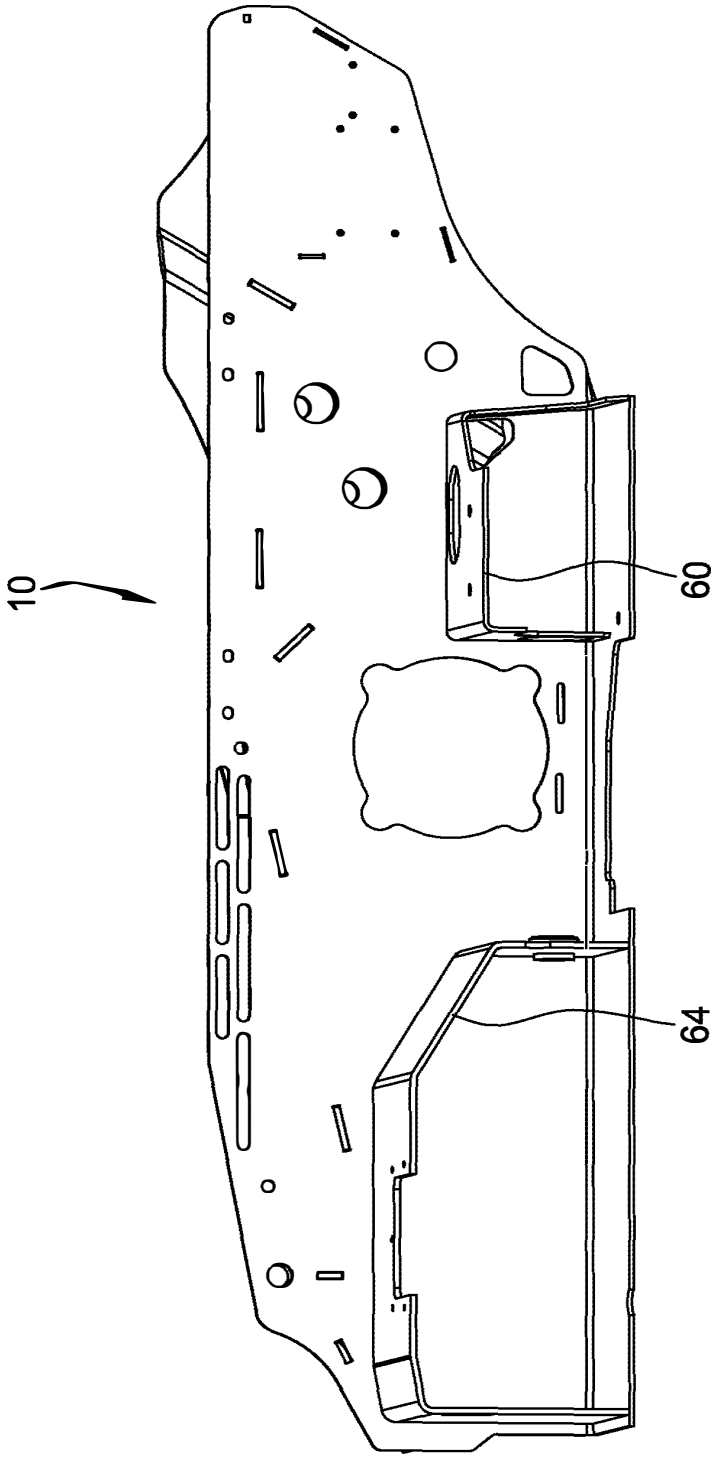

FIG. 6

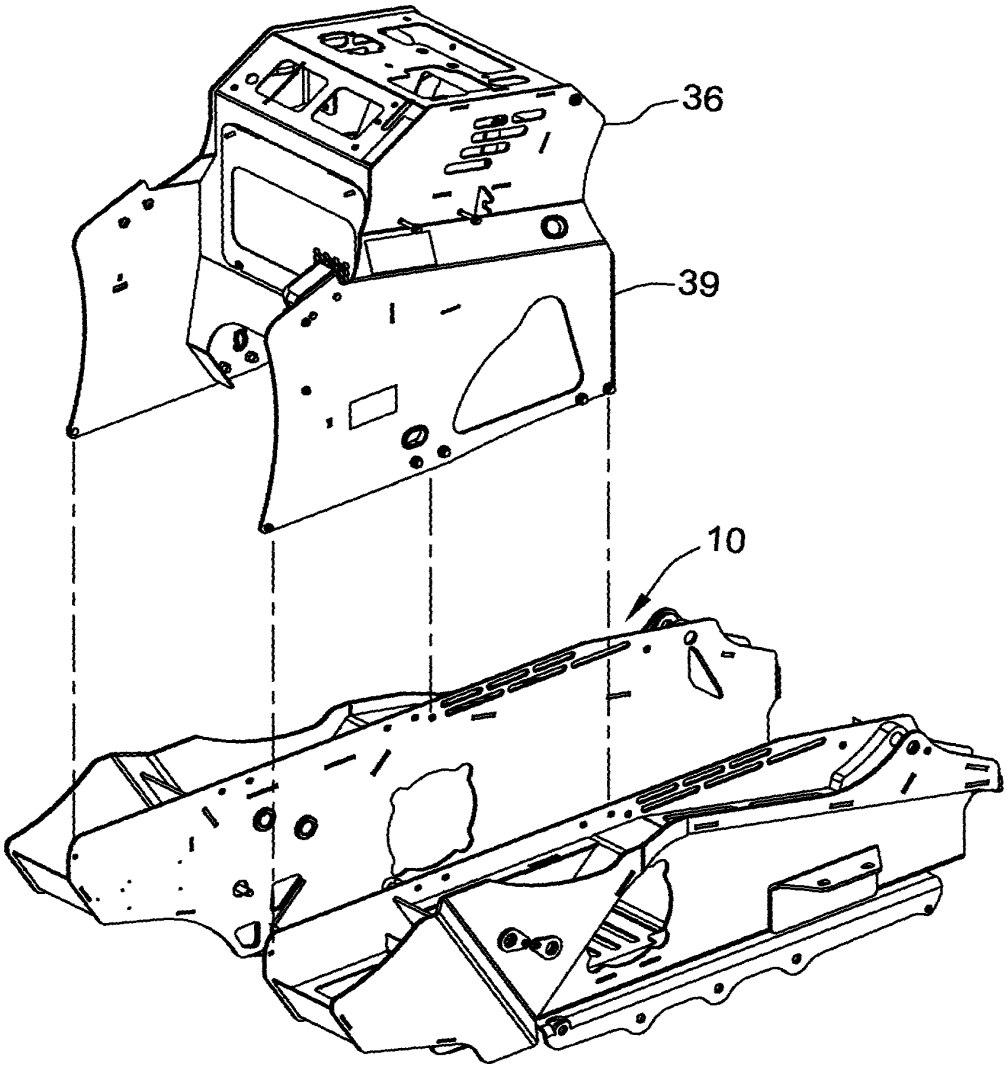

FIG. 7