UNITED STATES PATENT AND TRADEMARK OFFICE

BEFORE THE PATENT TRIAL AND APPEAL BOARD

KUBOTA NORTH AMERICA CORPORATION,
Petitioner,

v.

VERMEER MANUFACTURING COMPANY,
Patent Owner.

IPR2025-00169
U.S. Patent No. 9,321,386

DECLARATION OF MARK FLEMING, Ph.D., P.E. IN SUPPORT OF PATENT OWNER'S RESPONSE TO PETITION FOR *INTER PARTES* REVIEW OF U.S. PATENT NO. 9,321,386

Vermeer Manufacturing Company - Ex. 2016
Kubota v. Vermeer
IPR2025-00169
Page 1 of 120

TABLE OF CONTENTS

I. INTRODUCTION AND QUALIFICATIONS 1

II. MATERIALS CONSIDERED 4

III. COMPENSATION 5

IV. SUMMARY OF OPINIONS 5

V. LEGAL PRINCIPLES 5

VI. U.S. PATENT NO. 9,321,386 8

A. Overview of the '386 Patent 8

B. Challenged Claims of the '386 Patent 16

C. Prosecution History for the '386 Patent 17

VII. THE PRIOR ART REFERENCES RELIED ON BY KUBOTA 20

A. KR996 20

B. JP705 31

C. Bares 32

D. Beltrami 33

VIII. LEVEL OF ORDINARY SKILL IN THE ART 34

IX. CLAIM CONSTRUCTION 35

A. "mainframe" 35

X. LACK OF A MOTIVATION TO COMBINE THE ASSERTED PRIOR ART REFERENCES AND NO LIKELIHOOD OF SUCCESS 40

A. A Person of Ordinary Skill in the Art Would Not have been Motivated to Alter the KR996 Machine based on JP705. 40

B. A Person of Ordinary Skill in the Art Would Not have been Motivated to Further Alter the KR996-JP705 Machine based on Bares..... 42

C. A Person of Ordinary Skill in the Art Would Not have been Motivated to Further Alter the KR996-JP705-Bares Machine based on Beltrami. 52

XI. KUBOTA'S GROUND 1 ARGUMENTS FAIL..... 72

A. The Combination of KR996 and JP705 Fails to Disclose the Linkages and Actuator Attached to the *Mainframe*, as Required by Claims 50-54..... 72

B. The Combination of KR996 and JP705 Fails to Disclose the Linkages and Actuator Attaching to a *Single-Weldment Mainframe*, as Required by Claim 52. 77

XII..... KUBOTA'S GROUND 2 ARGUMENTS FAIL 79

A. The Combination of KR996, JP705, Bares, and Beltrami Fails to Disclose the Linkages and Actuators Attached to the *Mainframe*, as Required by Claims 55-63, 68-69, and 80-85..... 80

B. The Combination of KR996, JP705, Bares, and Beltrami Fails to Disclose the Linkages and Actuator Attaching to a *Single-Weldment Mainframe*, as Required by Claims 63, 82, and 85. 82

XIII. SECONDARY INDICIA OF NON-OBVIOUSNESS 82

A. Commercial Success and Praise 83

B. Skepticism at the Time of Invention 86

C. Unexpected Results of the Invention..... 87

D. Long-Felt but Unsolved Need and Prior Failures 87

E. Copying..... 89

1. Results from Kubota's Dealer Surveys 89

***2. Kubota's Competitor Research* 91**

3. Kubota's Proposed Specifications for its Compact Utility Loader 95

XIV. CONCLUSION 96

I, Mark Fleming, Ph.D., P.E., declare as follows:

I. INTRODUCTION AND QUALIFICATIONS

1. I have been retained by Patent Owner Vermeer Manufacturing Company ("Vermeer") to provide technical analysis and opinions relating to U.S. Patent No. 9,321,386 ("the '386 Patent") in this proceeding.

2. I am currently the Chief Technical Officer and a Principal Engineer at Fusion Engineering, LLC in Naperville, Illinois, which is a multidisciplinary engineering consulting and technical services company that offers a wide range of engineering services, including engineering analysis, testing, design and manufacturing review, and consulting services to a variety of clients. This includes the analysis of machinery for construction, agriculture, mining, and material handling, as well as other machinery designed for lifting using linkages and hydraulics.

3. I am also currently an adjunct professor of mechanical engineering at Northwestern University in Evanston, Illinois, where I teach undergraduate and graduate level courses on finite element analysis, failure analysis, and mechanistic data science. I also perform research on multiscale methods for engineering analysis.

4. Prior to joining Fusion Engineering, I was Senior Director of Mechanical Engineering at ITC Experts, Inc. in Sugar Grove, Illinois from 2011 to

2014. From 2003 to 2011, I was Senior Director of Mechanical Engineering at Packer Engineering, Inc. in Naperville, Illinois. Both ITC and Packer Engineering were multidisciplinary engineering consulting companies. As part of my consulting engineering practice, I performed design analysis of construction, agricultural and industrial equipment, including a structural design review of large mining trucks, rollover protection structure and falling object protection structure analysis of mining and industrial equipment, structural and fracture analysis of aerial lift equipment, and fracture analysis of construction equipment loader arms and power train components.

5. Prior to working at Packer Engineering, Inc., I was a design and manufacturing engineer at CNH (formerly Case Corporation) in Burr Ridge, Illinois from 1997 to 2003. CNH designs and manufactures off-highway equipment for agricultural and construction use, including skid steer loaders and track-type vehicles. During my time at CNH, I participated in the design development of skid steer loaders, including the structure, loader arms, bucket assemblies, and controls. I was also the manager of a manufacturing simulations group. In that position, I collaborated with manufacturing plants around the world.

6. I have been a registered professional engineer in the state of Illinois (license # 062.057502) since 2004.

7. I received a Bachelor of Science degree in Mechanical Engineering from the University of Nebraska in 1992. As part of my education, I took courses on machine design and kinematics, and manufacturing processes and techniques. I received a Master of Science degree in Theoretical and Applied Mechanics from Northwestern University in 1994 and a Doctor of Philosophy degree in Theoretical and Applied Mechanics from Northwestern University in 1997. I am also a member of the Pi Tau Sigma mechanical engineering honor society and the Tau Beta Pi engineering honor society.

8. I am currently a member of the American Society of Mechanical Engineers (ASME), the Society of Automotive Engineers (SAE), ASM International, and the United States Association for Computational Mechanics (USACM). I am also a member of the Northwestern University Mechanical Engineering Advisory Board.

9. Through my education, background, and work experience, I have developed a thorough understanding of machine design and manufacturing. Based on my education, training, knowledge, and professional experience, I am fully qualified to testify regarding the subject matter described and claimed in the '386 Patent.

10. My *curriculum vitae*, which includes a list of my publications, presentations, and prior testimonial matters, is attached as Appendix A to this Declaration.

II. MATERIALS CONSIDERED

11. I have been asked to analyze claims 50–63, 68–69, and 80–85 (the "Challenged Claims") of the '386 Patent.

12. In forming my opinions expressed in this Declaration, I have reviewed and considered the documents and materials identified in Appendix B to this Declaration.

13. I have further relied on my education, skill, training, and experience in the field of agricultural and construction machinery and equipment in forming my opinions. I have also considered the viewpoint of a person of ordinary skill in the art ("POSITA") at the time of the effective filing date of the '386 Patent.

14. I reserve the right to supplement my opinions in this Declaration to address any new information obtained in the course of this proceeding or based on any new positions taken by the Petitioner Kubota North America Corporation ("Kubota").

III. COMPENSATION

15. Fusion Engineering is charging an hourly rate of $450 for my services in this matter. My compensation is not dependent on the outcome of this proceeding and does not affect the substance of my statements and opinions in this Declaration.

16. As far as I am aware, neither myself nor Fusion Engineering have any financial interest in Kubota, Vermeer, or the '386 Patent. I also have no other conflicts of interests relating to Kubota, Vermeer, or the '386 Patent.

IV. SUMMARY OF OPINIONS

17. I have been asked by counsel for Vermeer to provide my opinions regarding whether the Challenged Claims would have been obvious to a POSITA in light of the alleged prior art.

18. Based on my review of the '386 Patent, the file history of the '386 Patent, the alleged prior art, and the other documents identified in Appendix B, and relying on my education, skill, experience, common sense, and expertise in the field of agricultural and construction machinery and equipment, it is my opinion that the Challenged Claims would not have been obvious to a POSITA. The bases for my opinions are detailed throughout this Declaration.

V. LEGAL PRINCIPLES

19. Vermeer's counsel has provided me certain legal principles that I have applied in this proceeding. My analysis and opinions were developed based on the following legal principles.

20. It is my understanding that in this proceeding, the '386 Patent claims priority to Provisional Application No. 62/118,860, filed on February 20, 2015. For purposes of this Declaration, I have been asked to apply February 20, 2015 as the earliest effective filing date for the '386 Patent.

21. I understand that a patent claim is unpatentable as obvious under 35 U.S.C. § 103 if the differences between the claimed invention and the prior art are such that the claimed invention as a whole would have been obvious before the effective filing date of the claimed invention to a POSITA.

22. I understand that in conducting an obviousness analysis, one must consider (1) the scope and content of the prior art, (2) the differences between the prior art and the claimed invention, (3) the level of ordinary skill in the art as of the earliest effective filing date, and (4) any additional considerations that may indicate the invention was obvious or not obvious.

23. I further understand that a claim may be found obvious in view of a single prior art reference or from a combination of two or more prior art references. I understand that an invention is obvious if a POSITA would have had a reason to make the invention and a reasonable expectation of success in so doing.

24. I have been informed that when relying on a combination of prior art references to establish obviousness, it is necessary to show: (1) that the claim

elements were known in the prior art and (2) that a skilled artisan would have been motivated to combine these known elements.

25. To qualify as prior art, a reference must qualify as "analogous art." A reference is considered analogous if it is from the same field of endeavor or is reasonably pertinent to the particular problem with which the inventor is involved. A reference is reasonably pertinent if it, as a result of its subject matter, logically would have commended itself to an inventor's attention in considering the problem.

26. It is also my understanding that a patent claim can be obvious in light of a single prior art reference if it would have been obvious to modify that reference. I understand that common sense and common knowledge can be considered in determining whether it would have been obvious to modify a prior art reference if supported by evidence and a reasoned explanation and a POSITA would have been motivated to make such a modification.

27. I understand that if a proposed modification would render the invention inoperable for its intended purpose, a POSITA would not have been motivated to combine the references.

28. I also understand that if a prior art reference teaches away from making the modification this supports a conclusion that a POSITA would not have found the claimed invention to be obvious. The same conclusion applies where the proposed modification would make the invention more complex, less efficient, or otherwise

"yield an unappetizing combination." When considering whether a POSITA would be motivated to modify a primary reference or combine it with a secondary reference, one weighs benefits lost by the proposed modification or combination against the benefits gained.

29. I further understand that there are certain secondary considerations that must be considered when evaluating the obviousness or non-obviousness of a claimed invention. I understand that such secondary considerations include: (i) commercial success of the patented invention, (ii) skepticism of those having ordinary skill in the art at the time of invention, (iii) unexpected results of the invention, (iv) any long-felt but unsolved need in the art that was satisfied by the alleged invention, (v) the failure of others to make the alleged invention, (vi) praise of the alleged invention by those having ordinary skill in the art, and (vii) copying of the alleged invention by others in the field.

30. I have been informed that there must be a nexus between any such secondary consideration and the alleged invention.

VI. U.S. PATENT NO. 9,321,386

A. Overview of the '386 Patent

31. The '386 Patent is titled "LOW PROFILE COMPACT TOOL CARRIERS." Ex. 1001 at Cover Page. The Abstract indicates that the '386 Patent

is directed to "[c]ompact tool carriers having a loader mounted to a low-profile mainframe." Ex. 1001 at Abstract, 1:12–13.

32. The '386 Patent was filed on April 21, 2015 and issued on April 26, 2016. Ex. 1001 at Cover Page. The '386 Patent claims priority to Provisional Application No. 62/118,860, which was filed on February 20, 2015. Ex. 1001 at Cover Page. For purposes of my analysis, I have been asked to apply February 20, 2015 as the earliest effective filing date for the '386 Patent.

33. Throughout this Declaration, I will be using the following terms interchangeably unless otherwise stated: compact tool carrier, compact utility loader, mini skid steer, and mini track loader.

34. Compact tool carriers generally differ from their full-size counterparts in a number of ways including weight, size, component layout, and complexity.

35. Compact tool carriers are smaller and weigh less than full-size skid steers. Because they are smaller, compact tool carriers allow the operator to work in tight spaces including residential back yards and smaller construction sites. Their smaller size also means they weigh less, which allows them to operate on sensitive surfaces, like finished lawns and gravel driveways, without doing as much damage.

36. Unlike full-size skid steers that are typically controlled by an operator seated inside an enclosed cab near the front of the machine, compact tool carriers are controlled by an operator standing behind or riding on the rear of the machine.

The control station (36) and operator platform (37) of the '386 Patent are shown below, with the area occupied by the operator identified in red:

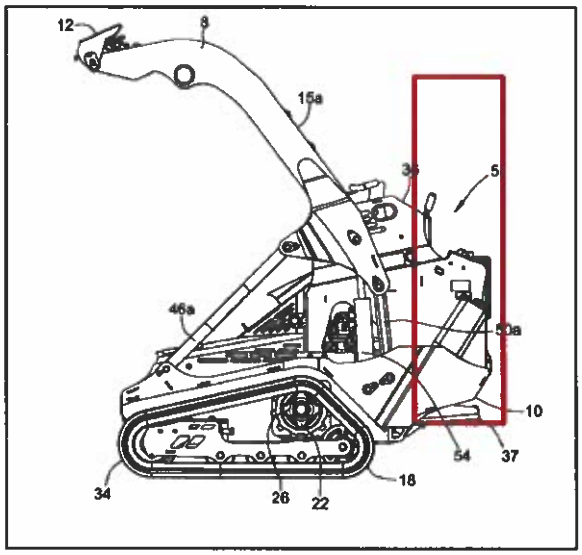

Ex. 1001 at Fig. 3 (annotation added).

37. Because the operator and controls are located at the rear of the machine, almost all the components of a mini-skid steer (*e.g.,* the engine, hydraulic pump, hydraulic lines, radiators, cooling lines, fuel pump, fuel tank, fuel lines, hydraulic tanks, hydraulic motors, and drive systems), are located and arranged differently than on a full-size skid steer machine. While the two categories of machine share similar names, the design and configurations of the two machines are almost entirely different.

38. Because of their smaller size and vastly different configuration, compact tool carriers present unique engineering challenges. Two significant challenges are lift capacity and lift height. Lift capacity refers to the amount of

weight the machine is able to lift without tipping, and lift height refers to the maximum height to which the machine is able to lift its load. These are key performance characteristics, because they allow the machine to perform a wider variety of tasks and to move a greater amount of material in fewer trips and in less time.

39. Full size skid steer machines are wide, long, heavy, and have the engine and other substantial components located at or near the rear of the machine (which pushes the center of gravity of the machine rearward). These characteristics naturally imbue a full-size skid steer with significant lift capacity and lift height. By contrast, compact tool carriers are narrow, short, and have the engine and other heavy components located toward the front of the machine (which causes the center of gravity to be located more forward). This vastly different configuration—combined with the need to keep the machine small and light weight—makes improving lift capacity and lift height a significant challenge:

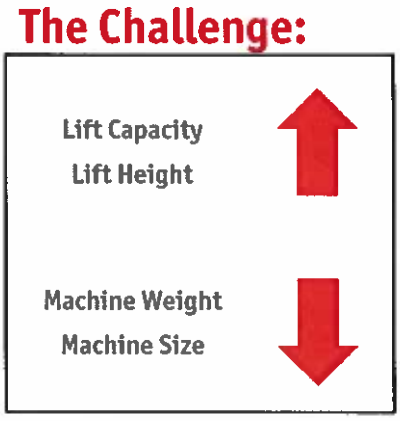

40. As I discuss further below, it is my understanding from the prosecution history record that skilled engineers—including those working for some of the industry's leading manufacturers—struggled for many years to find ways to meaningfully increase the lift capacity and lift height of their compact tool carriers without increasing their size and weight.

41. As this record shows, efforts to increase these metrics resulted in mundane improvements like switching from walk behind to ride on machines, moving fluid containers to the rear of the machine, adding "weight kits," or attaching the lift arms to the very rear of the machine and as high as possible—all with the goal of moving the center of gravity as far back as possible to combat tipping and to lift material as high as possible. Engineers also conceived of more creative ideas like machines that stretch or that move counterweights out the back of the machine as they lift material to avoid tipping. The industry realized only fractional benefits from the more mundane ideas, and the fanciful concepts were abandoned for being too complex or expensive.

42. As disclosed in the '386 Patent, Vermeer eventually conceived of a new machine with a significantly modified mainframe and vertical lift system.

43. By incorporating a vertical lift mechanism, the bucket of the compact utility loader moved vertically up and down rather than along the arcuate path implemented in previous radial-lift machines. Foregoing an arcuate path allowed

the load lifted by the machine to remain closer to the machine and reduced the tendency for the machine to tip forward. At the same time, the vertical lift system also allowed loads to be lifted higher than would be with an equivalent radial machine.

Photograph of Vermeer radial-lift compact utility loader; Ex. 1001 at Figs. 2 and 3 (superimposed; annotation added).

44. During the entire period that engineers were trying to enhance these characteristics of compact utility loaders, a wide variety of full-size skid steer vertical-lift machines were available on the market. But engineers at industry-leading manufacturers never considered vertical lift as a potential solution for compact utility loaders, because—as one of Vermeer's key compact utility loader competitors stated, it was considered "difficult if not impossible due to size and durability constraints" to use vertical lift on a compact utility loader. *See* Ex. 2004 at [0007]. This is not surprising, considering compact utility loaders are much smaller in size, have lower weight, have a different operator location, and

incorporate a vastly different configuration of internal components that must be considered when arranging pivot locations.

45. As evidenced by the '386 Patent, Vermeer overcame this "difficult if not impossible" challenge by conceiving of a new low-profile mainframe that made space for the more complicated vertical lift mechanism.

46. The new mainframe design taught in Vermeer's '386 Patent, shaded in green in the figures below, allowed for vertical lift linkages to attach at pivot points (shaded in red) located low on the machine. This design was a significant departure from prior art machines that all relied on pivot points located much higher on the mainframe of the machine.[1]

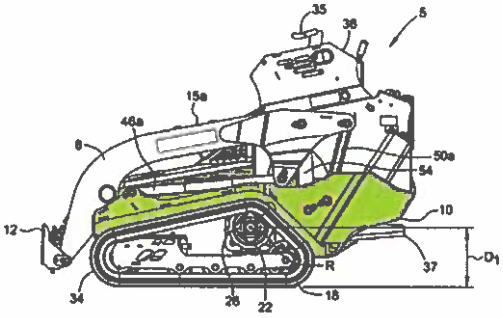

FIG. 2

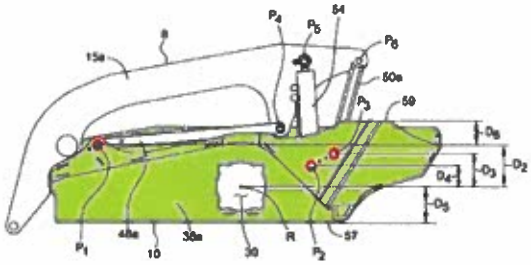

FIG. 5

[1] Conventional wisdom at the time was that placing pivots as high as possible on the mainframe would provide for higher lift height which engineers sought to maximize on compact utility loader machines.

Ex. 1001 at Figs. 1, 5 (mainframe shaded green, pivotal connections indicated by red circles).

47. Devising a mainframe that allowed the pivot points to be positioned low on the machine provided numerous advantages. First, it allowed the mass of the mainframe to be reduced, which provides for a lighter machine (further increasing the lift capacity to weight ratio) and lower cost. Second, it allowed the center of gravity of the machine to be lower, further decreasing the tendency for the machine to tip forward when in operation. Third, it allowed for improved visibility, which is another key factor in compact utility loader design. Ex. 1001 at 5:60–67.

48. The prosecution history record reveals that Vermeer's engineers were surprised to learn that the new vertical-lift prototype they had invented provided more than a 30% increase in lift capacity over an equivalent machine with a traditional mainframe and radial lift.

49. Vermeer's '386 Patent represented a significant step forward in the field of compact utility loaders, which—as discussed further below—was praised by the industry. It presented a novel and counterintuitive approach to machine design and gave way to significant improvements in lift capacity and lift height for compact utility loader machines.

B. Challenged Claims of the '386 Patent

50. I understand that Petitioner has challenged claims 50–63, 68–69, 80–85 of the '386 Patent. The Challenged Claims include four independent claims (claims 50, 55, 80, 83) and 18 dependent claims (claims 51–54, 56–63, 68–69, 81–82, 84–85). Claim 50 is reproduced below:

> **Claim 50.** A compact tool carrier configured for standing or walk-behind operator control and having a longitudinal axis and a mass of less than about 1500 kg, the compact tool carrier comprising:
>
> a loader adapted to carry a tool, the loader comprising:
>
> a first loader arm; a second loader arm; and
>
> at least one cross-member that extends from the first loader arm to the second loader arm;
>
> a mainframe for supporting the loader, the mainframe having a first side and a second side, and having a front end and a rear end relative to the longitudinal axis, the mainframe comprising an engine bracket that extends from the first side toward the second side for mounting an engine to the mainframe, the engine bracket being spaced from the rear end of the mainframe, the first loader arm not being directly attached to the mainframe;
>
> a first linkage pivotally attached to the first side of the mainframe and pivotally attached to the first loader arm at a first linkage pivot point;
>
> a second linkage pivotally attached to the first side of the mainframe and pivotally attached to the first loader arm at a second

linkage pivot point, each cross-member being disposed forward of the first linkage pivot point and the second linkage pivot point;

an actuator pivotally attached to the first side of the mainframe and pivotally attached to the first loader arm at an actuator pivot point;

a control station having operator controls for propelling the compact tool carrier forward and for raising and lowering the loader, the control station being mounted toward the rear of the compact tool carrier and adapted to allow for standing or walk-behind operation; and

an operator platform for standing operation of the operator controls of the control station.

Exhibit 1001 at 6:61–7:29.

51. Independent claims 55, 80, and 83 share certain elements with claim 50.

52. Dependent claims 51–54, 56–63, 68–69, 81–82, and 84–85 relate to additional features of the compact tool carrier.

C. Prosecution History for the '386 Patent

53. I have reviewed the prosecution history (also known as the file history or file wrapper) of the '386 Patent.

54. The '386 Patent issued from Application No. 14/691,649, which was filed on April 21, 2015. Ex. 1001 at Cover Page. Application No. 14/691,649 claims priority to Provisional Application No. 62/118,860, which was filed on February 20, 2015. Ex. 1001 at Cover Page.

55. The examiner in the original examination rejected claims 1–20 based on various prior art references. Ex. 1002 at 73–79. The prior art cited by the examiner included full-size skid steers with vertical-lift loader arms, in addition to smaller machines. Ex. 1002 at 76–78.

56. Vermeer responded by adding new limitations to its claims that focused on the specific inventive loader arm configuration and on the importance of ensuring that the pivot points connecting the mainframe to the actuator and linkages were posited low on the mainframe of the machine. Ex. 1002 at 57.

57. The '386 Patent underwent two separate *ex parte* reexaminations: one completed in 2018 and another in 2020. Both proceedings were initiated by the Toro Company. At the time of the reexaminations, the Toro Company was the named defendant in a patent infringement lawsuit filed by Vermeer—not unlike Kubota in this proceeding.

58. On February 18, 2016 (before the reexaminations), the Toro Company filed Patent Application No. 15/047,061, which was titled "UTILITY LOADER WITH HIGH LIFT LOADER ARMS AND UNIFYING HAND GRIP FOR DUAL TRACTION CONTROL LEVERS." Ex. 2004. Toro's application also disclosed a vertical-lift mini skid steer machine. In its application, The Toro Company described in detail the engineering challenges associated with the creation of a

compact utility loader having high lift height. Ex. 2004. Specifically, the Toro Company said that, at the time of the proposed invention:

- "the vertical reach of the loader arms on compact utility loaders is somewhat limited;"
- "the use of such high lift loader arms on a compact utility loader has been considered **difficult if not impossible** due to size and durability constraints;" and
- "it would be a further advance in the art to provide a way of safely and durably providing high lift loader arms on compact utility loaders to extend the vertical reach of such loaders."

Ex. 2004 at [0007] (emphasis added); *see also* Ex. 2005 at Fig. 3.

59. In its *ex parte* reexamination requests, however, Toro changed tack and made arguments that contradicted those it presented in its own patent application. In particular, Toro now argued that incorporating a vertical-lift loader arm configuration onto a mini skid steer would have been obvious. Ex. 1029 at 233–275; Ex. 1031 at 447–529. Toro suggested that a POSITA could simply replace the radial-lift loader arms of a known compact tool carrier with the vertical-lift loader arms found on a full-size loader. Ex. 1031 at 483; Ex. 1029 at 247–258.

60. In its response, Vermeer offered compelling objective indicia evidence demonstrating that—like Vermeer—Toro spent a significant time and money

attempting to maximize the lift capacity and lift height of its existing, radial-lift compact utility loaders. Ex. 1031 at 30–56. Ultimately, the Patent Office agreed with Vermeer and confirmed that the claims of the '386 Patent were patentable. Ex. 1001 at April 12, 2018 *Ex Parte* Reexamination Certificate, January 24, 2020 *Ex Parte* Reexamination Certificate.

61. The U.S. Patent Office has issued several other patents to Vermeer on its compact utility loader invention. These patents include U.S. Patent Nos. 9,975,750; 10,202,266; 11,465,891; and 12,098,063.

VII. THE PRIOR ART REFERENCES RELIED ON BY KUBOTA

62. In the sections that follow, I provide a high-level description of the four prior art references that Kubota contends render the Challenged Claims of the '386 Patent invalid.

A. KR996

63. KR996 was published on June 16, 2011 and is titled "Environmentally Friendly Construction Equipment for Building Deconstruction Work." Ex. 1005 at Cover Page. The construction equipment disclosed in KR996 "can easily attach and detach various dismantling equipment to the vehicle" depending on the type of project. Ex. 1005 at [0001]. The purpose of this detachable feature is to "greatly reduc[e] the economic burden of purchasing expensive heavy equipment, and

significantly sav[e] time and expenses for the maintenance of heavy equipment." Ex. 1005 at Abstract.

64. The KR996 machine was specifically intended to "enter narrow buildings and carry out dismantling work inside the building, and can easily attach and detach various dismantling equipment to the vehicle…." Ex. 1005 at [0001].

65. According to KR996, building deconstruction work typically required two machines with unique purposes: a mini excavator and a mini skid loader. Ex. 1005 at [0003]–[0005]. First, the mini excavator would perform a crushing operation using its "concrete breaker or crusher." Ex. 1005 at [0006]. Then, the mini skid loader with a bucket would remove the crushed concrete and load it onto the dump truck. Ex. 1005 at [0006].

66. KR996 notes that this workflow was inefficient and expensive, because (1) two separate machines must be purchased/rented, maintained, and stored, which is expensive and wasteful; and (2) either the mini excavator or the mini skid loader is idle while the other is in use, which results in inefficiencies. Ex. 1005 at [0007]–[0008]. KR996 describes a specific solution to this problem: a single machine that can function as both a mini excavator and a mini skid loader. Ex. 1005 at [0012]–[0015].

67. To accomplish this, KR996 discloses a modular machine with a complex, hydraulically actuated attachment mechanism that "enables the easy and

quick attachment and detachment of a bucket and a breaker with a single vehicle."

Ex. 1005 at [0012]. This quick attachment mechanism is shaded in red in Figure 1, reproduced below:

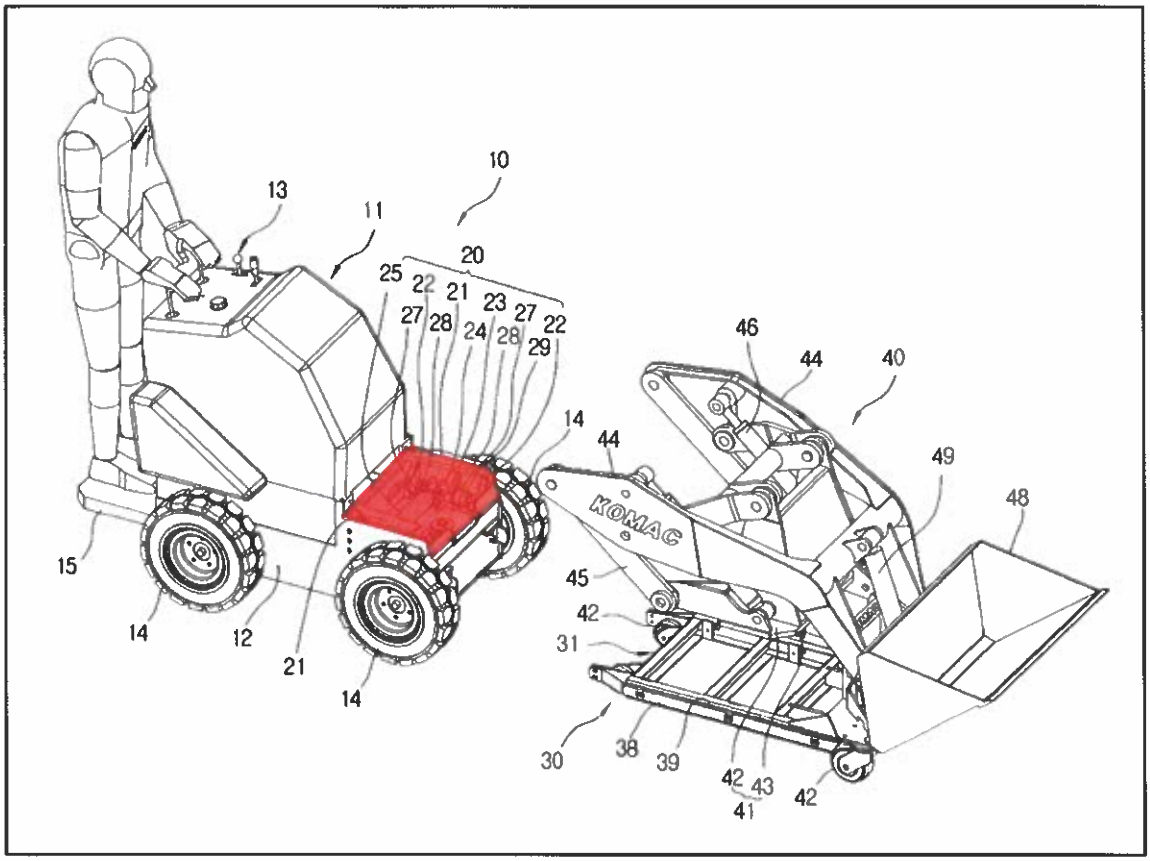

Ex. 1005 at Fig. 1 (shading added).

68. The arm unit (60), which includes a breaker (72), is illustrated in Figure 14:

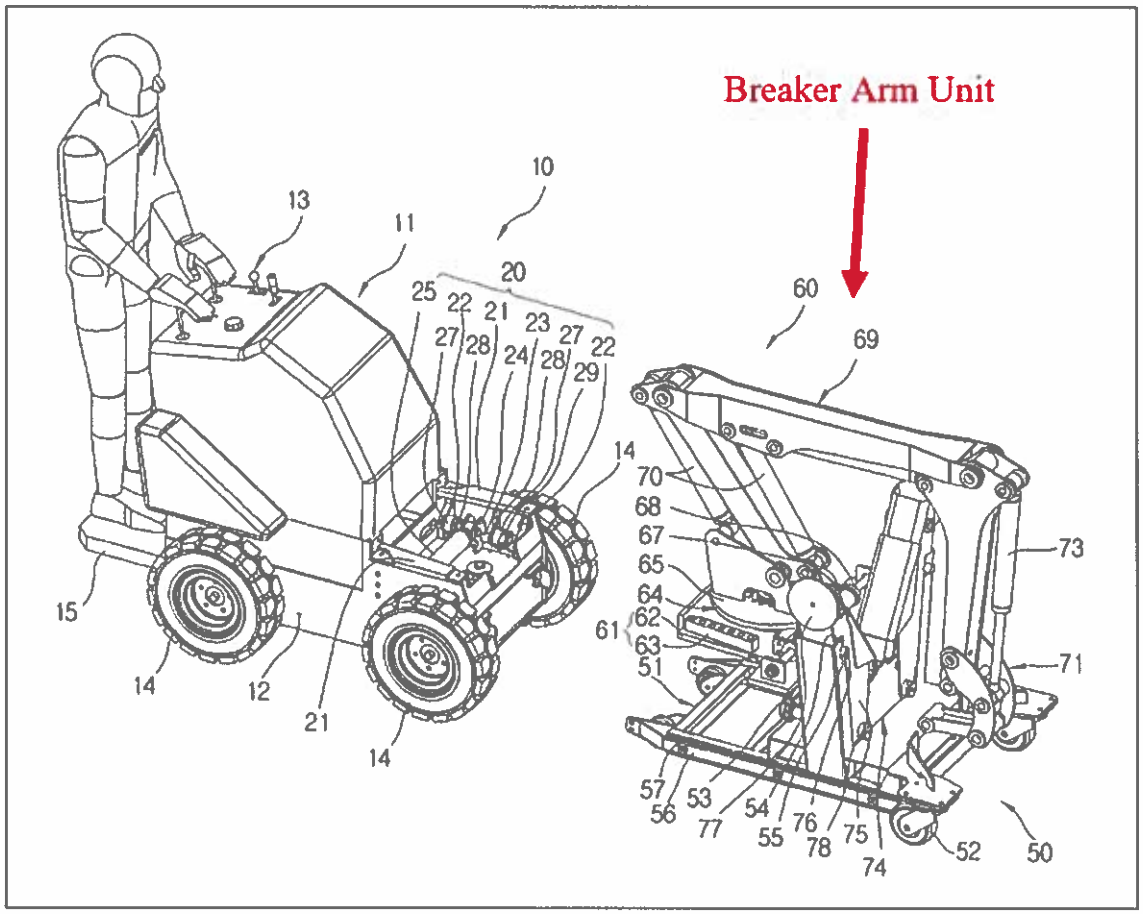

Ex. 1005 at Fig. 14 (annotation added).

69. As Figures 1 and 14 illustrate, KR996 discloses three unique pieces of equipment: the vehicle itself (10), a loader unit (40), and an arm unit (60). The vehicle (10), which appears on the left side of Figures 1 and 14 above, includes a main body (11), control unit (13), the attachment mechanism or "detachable part" (20), and four wheels (14). Ex. 1005 at Figs. 1, 14, [0116]–[0145]. The two detachable components—the loader unit (40) and the arm unit (60)—are separate from the vehicle (10), as illustrated on the right side of Figures 1 and 14.

70. KR996 focuses on this easy and quick attachable/detachable feature throughout the disclosure, suggesting that this is the key inventive concept of this machine. For example, KR996 states:

- [t]he present invention can **easily and quickly detach** the loader unit with a bucket and the arm unit with a breaker" (Ex. 1005 at Abstract (emphasis added));
- "[t]he purpose of the present invention…enables the **easy and quick attachment and detachment** of a bucket and a breaker" (Ex. 1005 at [0012] (emphasis added));
- elements of the machine, such as the "breaker attachment and breaker combined arm unit as a whole [are] **selectively detachable** to the vehicles detachable part" (Ex. 1005 at [0013] (emphasis added));
- "the present invention…allows the loader unit (40) or the arm unit (60) to be **easily and quickly attached and detached** from the vehicle (10)" (Ex. 1005 at [0069] (emphasis added)); and
- "the present invention relates to a vehicle (10) with a loader unit (40) installed with a bucket (48) and a breaker (72) to **easily and quickly detach** the arm unit (60)" (Ex. 1005 at [0088] (emphasis added)).

71. To enable the quick and easy detachment of the loader unit (40) and arm unit (60), KR996 describes wheeled "bogie" units (30 and 50) on which the

loader unit (40) and arm unit (60) are stored when the other attachment is in use. Those "bogies" are shaded in red in the figures below:

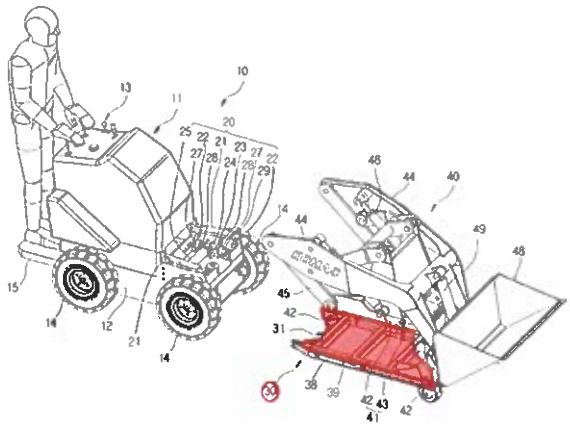

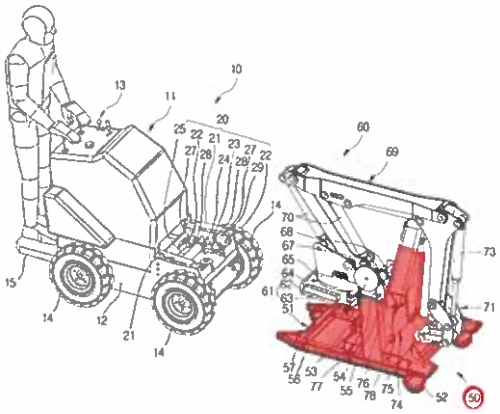

Ex. 1005 at Fig. 1, Fig. 14, [0041] ("The construction equipment for green building deconstruction work of the present invention consists of a vehicle (10), a bogie (30) for the loader unit (40), the loader unit (40), a bogie (50) for the arm unit (60), and the arm unit (60).") (annotations added).

72. KR996 explains how the design of the bogie units specifically interacts with the machine to achieve the quick-and-easy detachability of the loader unit and arm unit:

> The present invention, as described above, is characterized in that when the loader unit with a bucket installed is loaded onto the bogie, the vehicle is moved forward in the direction of the bogie *so that the inner sides of the vehicle wheels come into contact with the guide plates of the bogie*. As the vehicle continues to move forward, *the guide plates are pulled towards the inner side of the vehicle according to the rotation direction of the wheels, and the bogie is inserted into the front*

> *inner side of the vehicle*. Then, when the driving part of the detachable part is operated in a state where the bogie and the loader unit are docked at the front of the vehicle, the pressure roller rotates and presses the fixture of the loader unit upward, thereby coupling the loader unit to the main body of the vehicle. When the loader unit is coupled to the vehicle as described, as the vehicle moves backward, the guide plate in contact with the wheel is pushed to the opposite side of the vehicle, causing the bogie to detach from the vehicle. By using the mentioned operation, the empty bogie can be inserted into the vehicle side and the loader unit can be attached to the bogie. *Then, the bogie and the loader unit can be detached from the vehicle*. In the same manner, the arm unit with a breaker can be detached from the vehicle. Therefore, the present invention can easily and quickly detach and attach a loader unit with a bucket and an arm unit with a breaker installed on a vehicle, thereby significantly reducing the economic burden of purchasing expensive heavy equipment, and greatly saving time and expenses for the maintenance of heavy equipment.

Ex. 1005 at [0036] (emphasis added).

73. As described above, the bogies of KR996 include guide plates (38, 56) that are designed to engage with the lower inner surface of the tires of the machine. When the vehicle is propelled forward, the rotation of the wheels—and specifically the tire sidewalls—pull the guide plates towards the machine to enable connection of the loader unit or arm unit to the machine. Once the loader unit or arm unit is attached, the operator reverses the machine to propel it backwards, away from the

bogie. The sidewall of the wheel then pushes the guide plate of the bogie away from the machine. The reference also teaches that "shims" (liners 39) are inserted between the bogie and guide plates to fine tune the positioning of the guide plates to ensure they interface properly with the interior sidewalls of the machine's tires. Ex. 1005 at [0053]. This interaction between the inner surface of the tires and the guide plates of the bogies is a critical feature of the invention disclosed in KR996 that enables the quick-and-easy detachability feature. Ex. 1005 at [0052], [0060], [0069], [0071], [0074], [0078], [0080], [0083], [0086]–[0087]. Figures depicting this critical operation of the KR996 invention are presented below with the guide plates shaded in red:

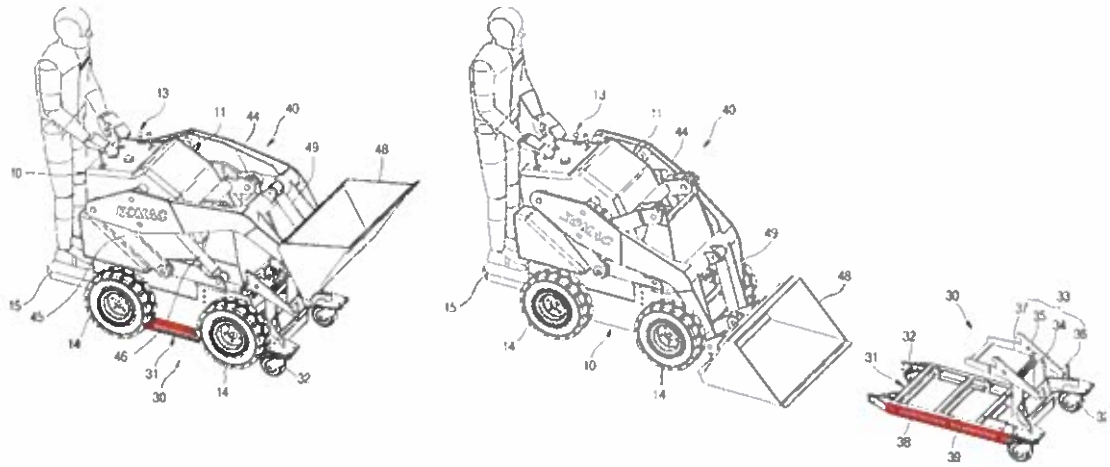

Ex. 1005 at Figs. 7, 8 (shading added).

74. It is important to note that the invention described in KR996 must be able to operate in a variety of different modes. In one of these modes, the machine

is operated *without any attachment* so that it can be transported to the construction site and maneuvered between various attachment bogies. In a second mode, the machine is brought into contact with the breaker attachment bogie so that the attachment mechanism can be manipulated to cause the breaker to attach to the machine or be deposited onto the bogie. In a third mode, the machine is operated with the breaker attached to, for example, break up construction debris. In a fourth mode, the machine is brought into contact with the loader attachment bogie and the attachment mechanism manipulated to attach the loader to the machine or to deposit it onto the bogie. And in a fifth mode, the machine is operated with the loader attached to, for example, clear construction debris from the site. The invention of KR996 is directed to a *single machine* that is capable of performing *all* of these various modes of operation.

75. As described in more detail below, it is my opinion that a skilled artisan would understand that the quick attachment mechanism and bogie concepts of KR996 would not work in a real word construction environment for a number of reasons.

76. First, as the reference itself explains, there is a great deal of precision required in the spacing of the guide plates so that they interface properly with the inner sidewalls of the tires of the machine. Real world construction environments contain dirt, rocks, mud and other debris. That debris would inevitably become stuck

on the guide plates or the sidewalls of the tires, disrupting the precise spacing required for the guide plates to interface with the tires. That debris would prevent the machine from properly accepting the bogie and the entire system would be rendered inoperable.

77. Second, the invention teaches that the bogie has small wheels that allow it to slide into engagement with the machine when installing or removing attachments. Those wheels must be small because the bogie must roll *under* the mainframe of the machine during coupling. But wheels with small diameters do not work on a construction site. Small wheels fall into ruts and become jammed against small rocks, sticks, mud, and other construction debris. When one of the wheels inevitably becomes stuck or jammed, the bogie will fail to roll in a coordinated way, which would again prevent the machine from accepting the bogie to exchange attachments.

78. Third, construction sites typically have varied and uneven terrain. These machines typically operate on gravel, dirt, mud, rocks, grass, mulch or over construction debris. These surfaces are never flat, but the machine taught in KR996 requires an almost perfectly flat surface to operate. The inherent undulations on a construction site would prevent the bogie from aligning in three dimensions with the machine, would prevent the bogie's sidewall from properly interfacing with the

guide plates, and would prevent the attachment mechanism from properly aligning with the mounting plates of the attachment.

79. In sum, it is my opinion that a skilled artisan would understand that the device disclosed in KR996 would not be capable of successfully operating in any real-world environment for a compact utility loader.

80. KR996 also teaches including a safety fence (16) to protect the operator from flying debris and a watering device (17) to suppress dust generation. *Id.* at [0089]–[0092]. These two features are depicted in Figures 21 and 22 in lower resolution, with a simplified depiction of the KR996 machine depicted. These high-level schematics depict the safety fence simply as a box (16) surrounding the operator, with no further details:

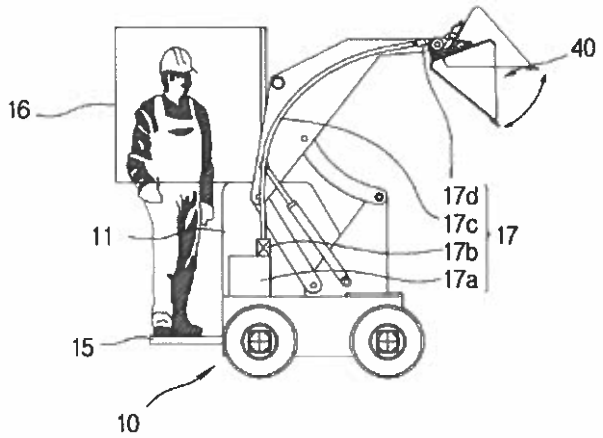

Ex. 1005 at Fig. 21.

81. Although these features (safety fence and watering device) depicted in Figures 21 and 22 are not relevant to the issues before the Board, Dr. Velinsky relies on these figures to advance of some of his obviousness assertions, which I address

further below. I note that the lack of specific detail in these figures is representative of the overall lack of disclosure in KR996 regarding how to actually implement the ideas set forth therein. Attached as Exhibit 2006 I provide a summary of some of the inconsistencies and significant problems with the machine depicted in KR996.

B. JP705

82. JP705 was published on January 22, 2004, and is titled "Main frame for work vehicle." Ex. 1006. JP705 discloses a large machine intended for construction work, "such as a bulldozer, hydraulic excavator, and the like." Ex. 1006 at Abstract. As discussed above, these full-size bulldozers and excavators are substantially different than the compact utility carriers disclosed in the '386 Patent.

83. JP705 teaches a mainframe having short attachment points to mount various components like the engine. Ex. 1006 at Abstract, [0012]. JP705 teaches the use of short attachment points to "eliminate interference with the various on-board devices." Ex. 1006 at [0012]. The mainframe taught in JP705—which again is designed and configured for use with a full-size bulldozer or excavator—is illustrated in Figure 1:

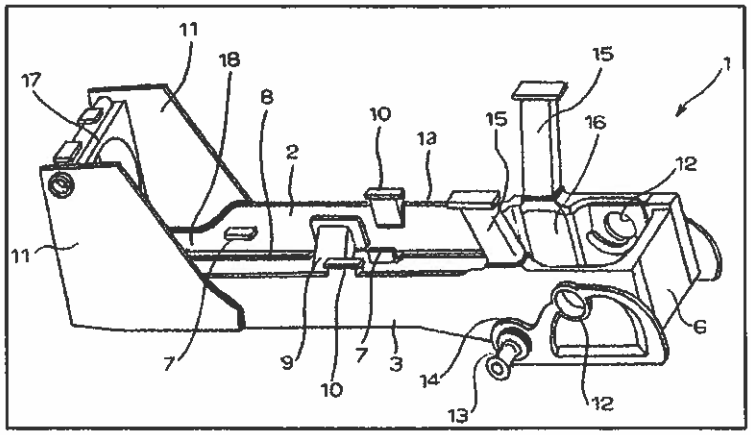

Ex. 1006 at Fig. 1.

C. Bares

84. The Bares reference (U.S. Patent No. 6,832,659), titled "Loader Frame and Bolt-On Track Drive," issued on December 21, 2004. Ex. 1010 at Cover Page.

85. Bares is directed to a small loader that uses radial lift. *Id.* at 1:33, 2:55–65. In at least one embodiment, the loader is "track propelled by drive units on opposite sides of a center body or frame." *Id.* at 1:35–36. The loader of Bares includes pivots that are located "at or near the uppermost part of the loader." *Id.* at 2:53–54.

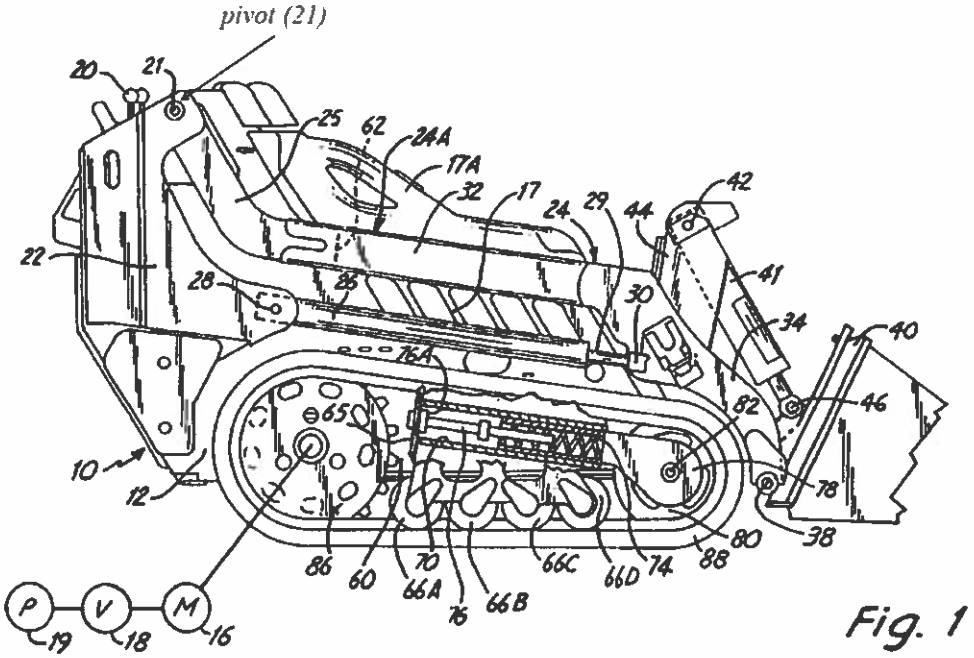

Fig. 1

Ex. 1010 at Fig. 1 (annotated).

D. Beltrami

86. The Beltrami reference was filed on December 23, 1968 and is titled "DIGGING AND LIFTING DEVICE." Ex. 1008 at Cover Page. Specifically, the Beltrami device has "a grabbing or excavating bucket" preferably used for digging and lifting "loose materials" such as soil. Ex. 1008 at 1:5–16. The bucket is "lifted by a pair of [parallel] arms," which are each "connected to the vehicle body through two connecting rods pivoted at one end and at an intermediate point thereof." Ex. 1008 at Abstract. The arms are also "quadrilateral so to impart the bucket at a

substantially vertical path." Ex. 1008 at Abstract. The device is illustrated in, *e.g.*, Figure 3:

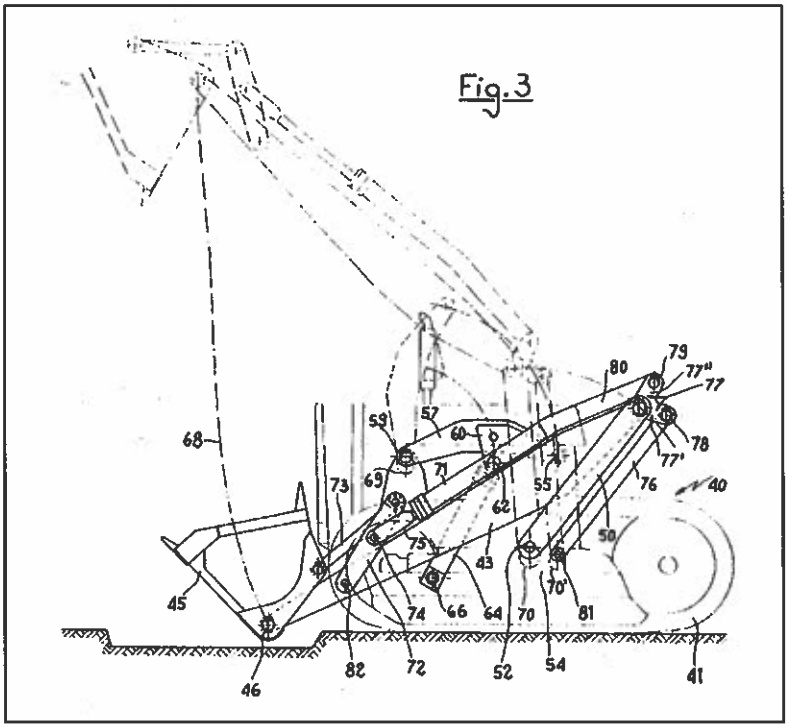

Ex. 1008 at Fig. 3.

VIII. LEVEL OF ORDINARY SKILL IN THE ART

87. The '386 Patent is directed to compact tool carriers having a loader that follows a vertical travel path and is mounted to a low-profile mainframe. *See generally* Ex. 1001. The Abstract of the '386 Patent states as follows:

> Compact tool carriers having a loader mounted to a low-profile mainframe are disclosed. In some embodiments, the pivot points of the mainframe about which the loader is pivoted are low relative to the mainframe to reduce the mainframe size and to lower the center of gravity to improve the stability of the compact tool carrier during use.

Ex. 1001 at Abstract.

88. Based on the subject matter of the '386 Patent, it is my opinion that a person of ordinary skill in the art at the time of the alleged invention would have had at least a Bachelor of Science degree in Mechanical or Agricultural Engineering and two years of experience in the design of machines, or have had equivalent knowledge and experience.

IX. CLAIM CONSTRUCTION

89. It is my understanding that the terms appearing in the claims of the '386 Patent should be given their ordinary and customary meaning to a person of ordinary skill in the art as of the earliest effective filing date (February 2015).

A. "mainframe"

90. The plain and ordinary meaning of "mainframe," as that term has been preliminarily construed by the Board is "the primary supporting structure" of the machine. In my view, this construction is consistent with the plain meaning of the words "main" and "frame" and their use within the '386 Patent. Ex. 2007 (defining the noun "frame" as "the rigid supporting structure of a vehicle, aircraft, or other object" and defining "main" as an adjective meaning "chief in size or importance").

91. As the primary supporting structure of the compact utility loader, the "mainframe" is the core structure of the machine to which the other components attach. This is shown in the specification of the '386 Patent. Ex. 1001 at 2:2–3

("The drive mechanism is attached to the mainframe."), 3:20–24 (same), 3:62–64 (upper frame supporting the control station is attached to mainframe), 4:10–12 (engine and drive mechanism including tracks or wheels are connected to the mainframe), 4:13–18 (loader arms connected to mainframe), 4:35–42 (actuators connected to mainframe), 5:52–55 (mainframe includes an engine bracket for connecting and supporting the engine). Other patent references use mainframe in the same manner, further demonstrating the plain and ordinary meaning of this term as of February 2015. Ex. 1006 (JP705 prior art relied on by Kubota), at [0002] ("main frames . . . constitute a main part of a chassis in various types of work vehicles . . . .").

92. A person of ordinary skill in the art in February of 2015 would further understand that the "primary" supporting structure refers to a fundamental part of the machine that is always present—not selectively removeable—during all aspects of operation of the machine.[2]

[2] A skilled artisan would understand that the mainframe could be disassembled for maintenance or repair. But they would also understand that the mainframe would be present and fully assembled during all phases of the operation of the machine. This is consistent with the plain and ordinary meaning of the term "mainframe."

93. Construction machines with selectively removeable equipment or attachments were well known in the art before the earliest effective filing date of the '386 patent. *See, e.g.*, Ex. 1001 at 1:21–28 ("Compact tool carriers are generally defined (e.g., ISO 6165 (2012) and SAE J2752) as 'a self-propelled crawler or wheeled machine having . . . either front-mounted interchangeable equipment or lift arms with an attachment bracket capable of coupling to the interchangeable, front-mounted attachments.' The tool carriers may be attached to a variety of interchangeable tools such as buckets, augers, forks, stump grinders, tillers, rollers and the like."); Ex. 2018 at 1:38–41 ("Attachments such as an auger, a grapple, sweeper, landscape rake, snowblower or backhoe, some of which may include their own hydraulic motor, are sometimes mounted to a boom assembly on the front of the skid steer loader."); Ex. 2019 at 1:46–53 ("augers, bale handlers, brooms, buckets, cold planers, concrete pulverizers, cutters, dozer blades, fertilizer spreaders, fork lift forks, grapples, hitches, landscape rakes, mowers, mulchers, plate compactors, pole claws, pot movers, rock and tree handlers, rock saws, rollers, rotary brooms, shears, snow blowers, splitters, stump grinders, swale blades, tillers, tree spades, trenchers, and winches, among others."); Ex. 2020 at 1:61–2:3 ("Different types of work tool accessories are interchangeably attached and released from the machine 10. For this reason, a functional appeal of skid steer loaders is the ability to use a wide variety of work tool accessories or attachments for a variety of different

uses. These work tool accessories or attachments are often powered by the loader's hydraulic system and include, for example, excavators, earth augers, specialized buckets, hydraulic breakers, snow blowers, trenchers, cement mixers, rippers, backhoes, pallet forks, wheel saws, etc.").

94. Given the foregoing, a skilled artisan would have understood that the mainframe of the machine encompasses only the *primary* supporting structure of the machine, and not any supporting structure that selectively removeable during various operations of the machine. This understanding is evident from how the term "mainframe" is used numerous references that pre-date the '386 patent:

- Ex. 2018 at Fig. 1, 3:45–50, 4:45–61, 5:40–55: Distinguishing the "main frame assembly" (16), which is the primary supporting structure of the machine from various secondary supporting structures, including "upright members" (20) and the supporting structure of the selectively removeable mower attachment (50) (e.g., the case (52) and its components, including the front and rear structural tubes (68), the quick attachment receiver (58) and its gussets (90), side plates (92), and top plate (94)).

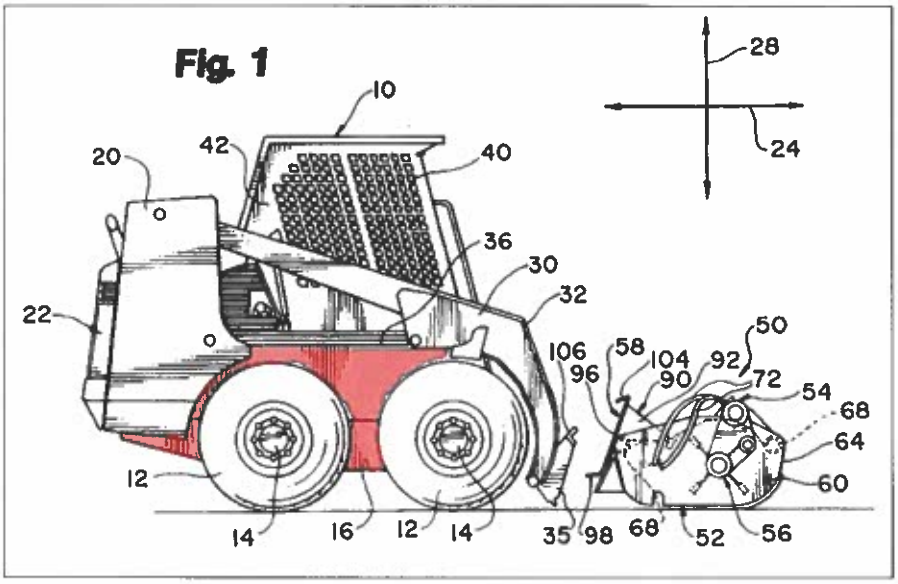

Ex. 2018 at Fig. 1 (shading added).

- Ex. 2017 at Fig. 1, 3:22–62: Distinguishing "main frame 16" (red) from the "carrier frame 34" (blue) of the selectively removeable backhoe attachment 10.

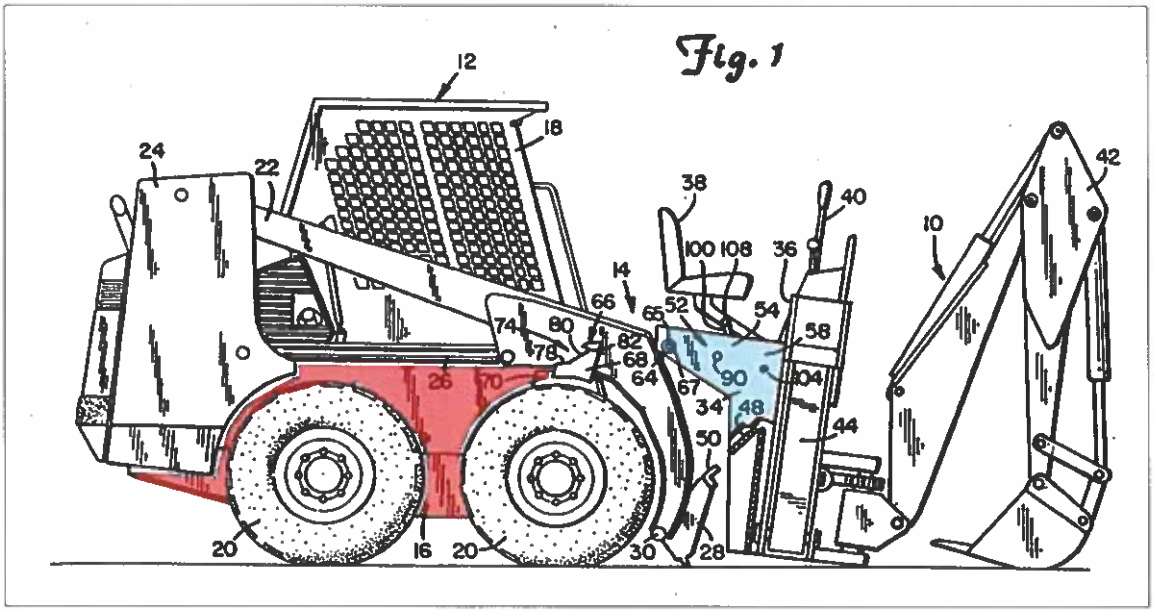

Ex. 2017 at Fig. 1 (shading added).

X. LACK OF A MOTIVATION TO COMBINE THE ASSERTED PRIOR ART REFERENCES AND NO LIKELIHOOD OF SUCCESS

A. A Person of Ordinary Skill in the Art Would Not have been Motivated to Alter the KR996 Machine based on JP705.

95. For some of their obviousness allegations, Kubota and Dr. Velinsky rely on a combination of KR996 and JP705. Specifically, they assert that a POSITA would modify KR996 by incorporating the engine bracket taught in JP705 into the design of the construction vehicle disclosed in KR996. Petition at 24 ("While KR996 does not detail how its engine is secured to its mainframe, JP705 does detail providing a mounting surface for just such an engine in a substantially similar vehicle."); Ex. 1003 at ¶¶58–60. Dr. Velinsky asserts that a POSITA would use both the type of engine bracket taught in JP705 and the location of the engine bracket taught in JP705 to modify the KR996 machine.

96. I disagree that a POSITA would rely on JP705 to modify the KR996 machine's mechanism for securing the engine. First, KR996 and JP705 are directed at two very different types of construction equipment. KR996 discloses "Environmentally Friendly Construction Equipment." Ex. 1005 at Title, [0001] ("The present invention relates to construction equipment for green building deconstruction work, particularly to construction equipment for green building deconstruction work that can enter narrow buildings and carry out dismantling work

inside the building. . . .") (emphasis added). In contrast to the small machine disclosed in KR996, JP705 describes a mainframe for use in large work vehicles such as bulldozers and hydraulic excavators. Ex. 1006 at [0001] ("The present invention relates to a main frame for a work vehicle such as a bulldozer, hydraulic excavator, or other construction or civil engineering machine…."). Given the substantial differences in the machines in KR996 and JP705, a POSITA would not have been motivated to incorporate JP705's mainframe design elements, including its engine bracket into the KR996 machine. The type of machine addressed by JP705 is fundamentally different from a compact utility loader, and a mainframe that accommodates the internal components sized and arranged for a full-size bulldozer or hydraulic excavator would not apply to a far smaller and differently arranged compact utility loader.

97. Further, even if there was reason or motivation to incorporate an engine bracket into the KR996 machine, I disagree that a POSITA would have relied on JP705's teaching as to the *location* of the engine bracket, as Dr. Velinsky asserts. *See* Ex. 1003 at ¶84. Unlike the machine taught in KR996, the engine of JP705 is located behind the operator's cab because JP705 discloses a mainframe to be used in full-size machines:

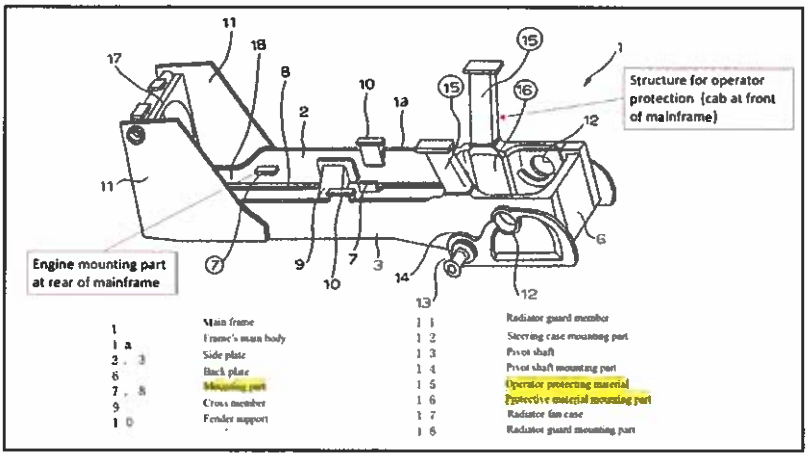

Ex. 1006 at Fig. 1 (annotations added).

98. Due to these fundamental differences in the types of machines disclosed in KR996 and JP705, a POSITA would not have been motivated to alter the design of the KR996 machine to include the type of engine bracket taught in JP705 at the location taught therein.

B. A Person of Ordinary Skill in the Art Would Not have been Motivated to Further Alter the KR996-JP705 Machine based on Bares.

99. For some of the challenged claims, Kubota and Dr. Velinsky rely on a further combination of the KR996-JP705 machine with U.S. Patent No. 6,832,659 ("Bares"). Specifically, Dr. Velinsky asserts that a POSITA would have been motivated to replace the wheels of the KR996-JP705 machine with tracks, like those disclosed in Bares. Ex. 1003 at ¶¶142-145.

100. Bares discloses a loader frame and bolt-on track drive in which a track drive is bolted to a small loader with a unitary frame. One of the disclosed embodiments has an elevated track drive sprocket.

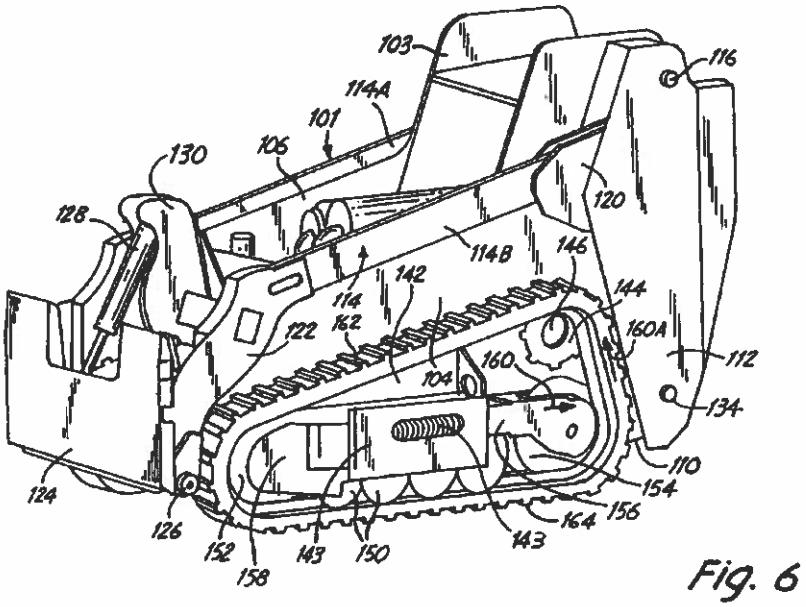

Ex. 1010 at Fig. 6.

101. I disagree that a POSITA would have been motivated to replace the wheels of the KR996-JP705 machine with tracks for a number of reasons, each of which is described in detail below.

102. The tires of the KR996-JP705 machine play a critical role in achieving the quick-and-easy detachability of the loader unit and arm unit. Specifically, KR996 teaches that the inner sidewall of the front tires must be able to precisely interface with the guide plates of the bogies that carry the loader arm attachment unit and the breaker arm attachment unit. When the wheels rotate forward, the inner

sidewall of the tires flex and grip the guide plates and pull those plates (and the bogie) towards the machine. This allows the bogie to cooperate with the machine to attach or detach the loader arm attachment unit or breaker arm attachment unit. When the wheels of the machine are rotated in the opposite direction, the inner sidewall of the front tires push the guide plates of the bogie away from the machine. Dr. Velinsky agrees with my interpretation of this functionality. Ex. 2021 at 84:9-15.

103. This interaction between the tires and the bogie is repeatedly identified as enabling the quick and easy attachment and detachment of the loader and arm units. Ex. 1005 at [0052], [0060], [0069] [0071], [0074], [0078], [0080], [0083], [0086]–[0087].

104. KR996 teaches that the relative spacing of the guide plates and tire sidewalls is critical to this functionality. For example, the reference teaches the use of "liners (39)" which act as shims and allow the operator to precisely adjust the distance between the guide plates so that the tire flexion can properly grip the guide plates. Ex. 1005 at [0053]; Ex. 2021 at 95:16-96:1; 97:16-21.

105. A POSITA would recognize that, unlike tires, tracks are relatively stiff and inflexible in the lateral direction. Whereas tires have sidewalls that are flexible and bow out under the load of the machine, tracks are rigid. This rigidity prevents a track from being capable of gripping the guide plates of the bogie like a tire would.

106. Moreover, unlike the tires taught in KR996, the treads of a tracked system do not extend significantly far off the ground. As such, that tread would not have the height necessary to grip the guide plates, which themselves are suspended above the ground on the wheels of the bogie:

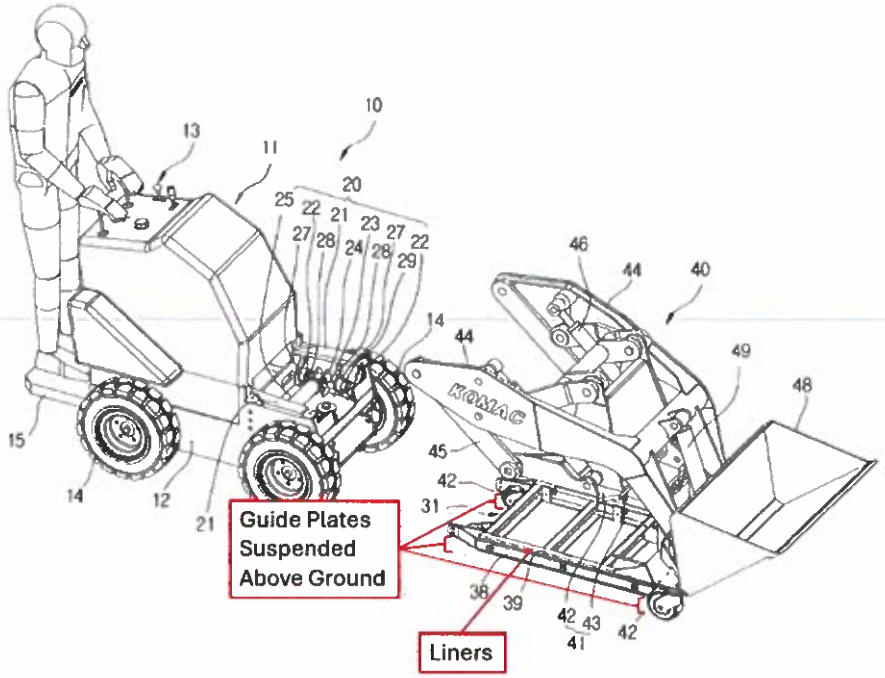

107. Removing the tires and wheels of KR996-JP705 would also remove the key alignment feature those components provide. That alignment feature is necessary to ensure the bogie aligns properly as it slides underneath the machine. A POSITA would realize that replacing the wheels and tires with a track system would remove the alignment system and introduce a significant risk that the forks or tines of the bogie (the elongated structures that include the guide plates) enter the track system and become jammed. This could result in damage to the bogie and/or track

system, and could cause the bogie to tip over which could damage the attachment or cause harm to the operator or other workers.

108. For all the reasons set forth above, a POSITA would recognize the important role that the tires of KR996-JP705 play and that tracks would not be an acceptable alternative solution because they are rigid and do not extend above the operating surface sufficiently to grip the guide plates. In view of these recognitions, a POSITA would not be motivated to replace the tires of the KR996-JP705 machine with tracks and would not have a reasonable expectation of succeeding with such a modification.

109. Dr. Velinsky does not address this issue, much less provide a reasonable explanation as to why a POSITA would be motivated to sacrifice this key functionality performed by the tires of the KR996-JP705 machine. During his deposition, it was unclear whether Dr. Velinsky was even aware that the sidewall of the tires even performed this important role in the operation of the machine. Ex. 2021 at 79:24-84:8.

110. Instead, Dr. Velinsky primarily relies on the unremarkable fact that—generally speaking—wheels and tracks were known alternatives. Ex. 1003 at ¶ 143. But this generalized conclusion does not address the specific operation of KR996 and how that operation would be adversely impacted by replacing the wheels and tires of the machine with tracks.

111. Dr. Velinsky also asserts that a POSITA would switch the KR996-JP705 machine's wheels for tracks to accommodate uneven, rocky terrain and to lower ground pressure to avoid sinking or slipping on soft/muddy surfaces. *Id.* at ¶ 144. I disagree with this assertion because KR996 is specifically designed for indoor deconstruction work and would not be operable on uneven, rocky terrain. *See* Ex. 1005 at [0001] ("The present invention relates to construction equipment for green building deconstruction work, particularly to construction equipment for green building deconstruction work that can enter narrow buildings and carry out dismantling work inside the building. . . .").

112. From the disclosure of KR996-JP705, a POSITA would recognize that the attachment/detachment feature can only function—if at all—indoors and on a level, clean surface (such as a concrete floor). The bogie's wheels, designated by reference numeral (32) in the figure below, must be small to slide far underneath the machine during attachment and detachment operations:

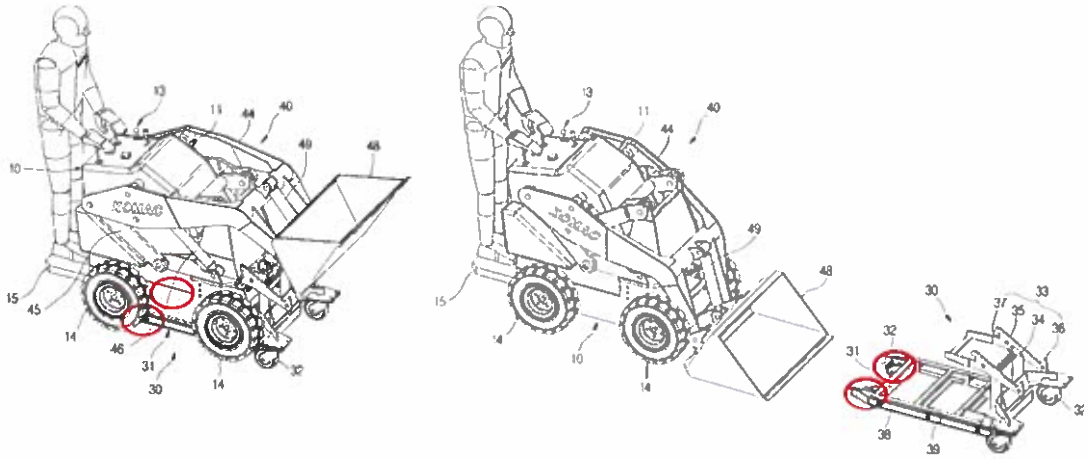

Ex. 1005 at Fig. 7, Fig. 8 (circles identifying position of rear bogie wheels added).

113. This functionality requires ensuring (1) the wheels are small enough to fit under the machine, (2) the wheels roll properly on the surface (which, given the necessary small diameter of the wheels, must be clear of debris), (3) a clean work area so that mud or dirt does not collect on the inside of the wheels and upset the precise spacing required between the guide plates of the bogie and inner sidewalls of the tires, and (4) the terrain is not uneven or rocky so there is proper three dimensional alignment of the bogie with the machine and (a) the guide rails slide linearly along the bottom of the machine, (b) the sidewalls of the tires can engage with the guide plates, and (c) the attachment is able to engage properly with the hydraulic clamping mechanism (which would not be possible if the machine and bogie are sitting on the uneven terrain of a typical construction site), and (5) the terrain is not muddy or soft, which would cause the wheels of the bogie to sink

into the ground, fail to roll, and fail to align in properly with the machine during attempts to install or remove attachments.

114. Dr. Velinsky agrees with this aspect of my assessment of KR996. Ex. 2021 93:16-94:16 (admitting that if the bogie rolls over rubble, the machine would have trouble coupling with the bogie), 94:17-95:3 (admitting that on a bumpy grass surface, the machine would have trouble coupling with the bogie), 99:22-100:24 (admitting that mud, snow and ice conditions would cause the bogie to be misaligned), 101:21-102:1 (admitting that on uneven terrain the bogie would be unable to couple with the machine).

115. Despite recognizing these significant limitations of the KR996-JP705 machine, Dr. Velinksy admitted that he did not consider the machine's coupling and uncoupling feature when conducting his validity analysis. Ex. 2021 at 103:3-18 ("I wasn't concerned about the coupling, uncoupling in that manner.").

116. Given the foregoing restrictions, and the need for the KR996-JP705 machine to fulfill its intended purpose, which is to provide a platform for quickly interchanging attachments, a POSITA would not be motivated to add tracks to the KR996-JP705 machine for operation in uneven, rocky or muddy terrain, because the machine is otherwise incapable of being operated in such environments.

117. Despite the foregoing, I did evaluate the feasibility of replacing the wheels of the KR996 patent with the track system taught in Bares. As shown in the

image below, this replacement causes significant interference between the track system and the tank structure on the mainframe.

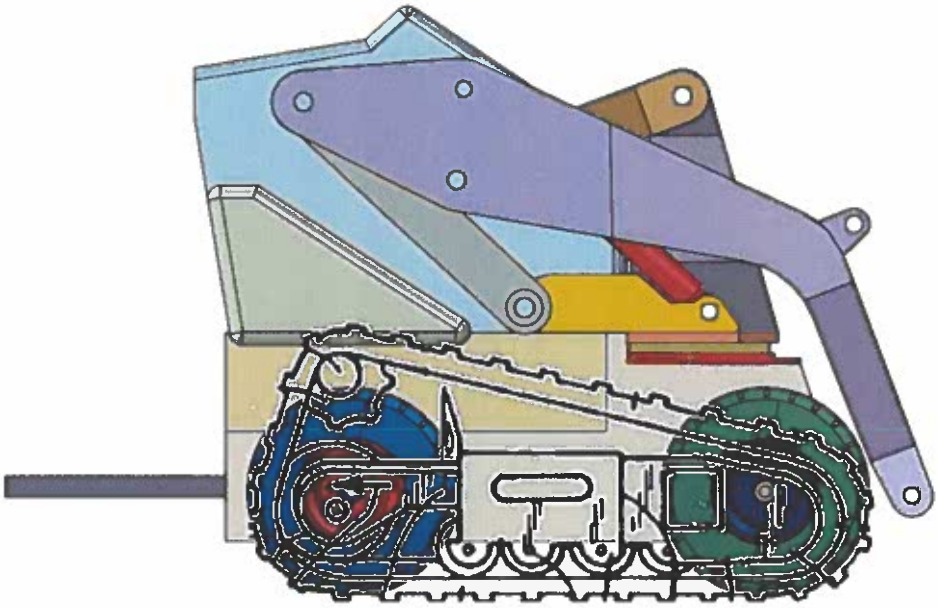

KR996 CAD model with Bares track superimposed.

118. Additionally, this configuration would require a redesign of the fundamental structure and drivetrain of the KR996 patent. As shown in the following figure, the drive motor and sprocket of Bares would directly interfere with the engine and support structure of the machine.

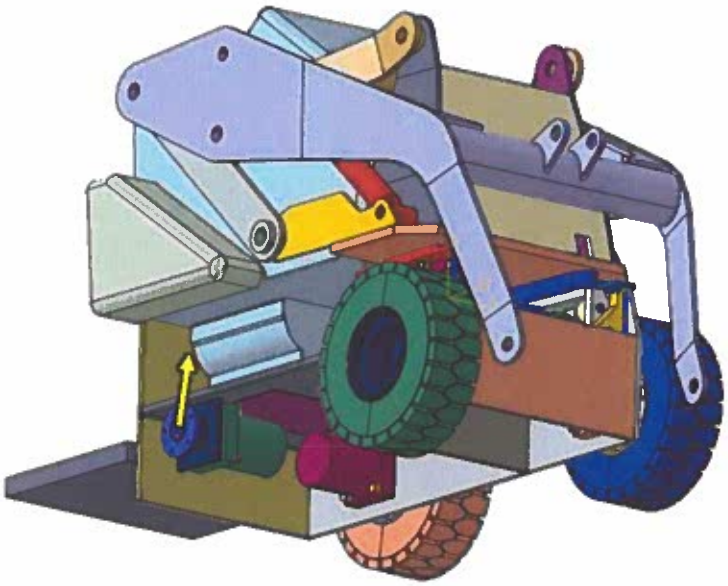

KR996 CAD model showing limited room to move rear wheel drive motor.

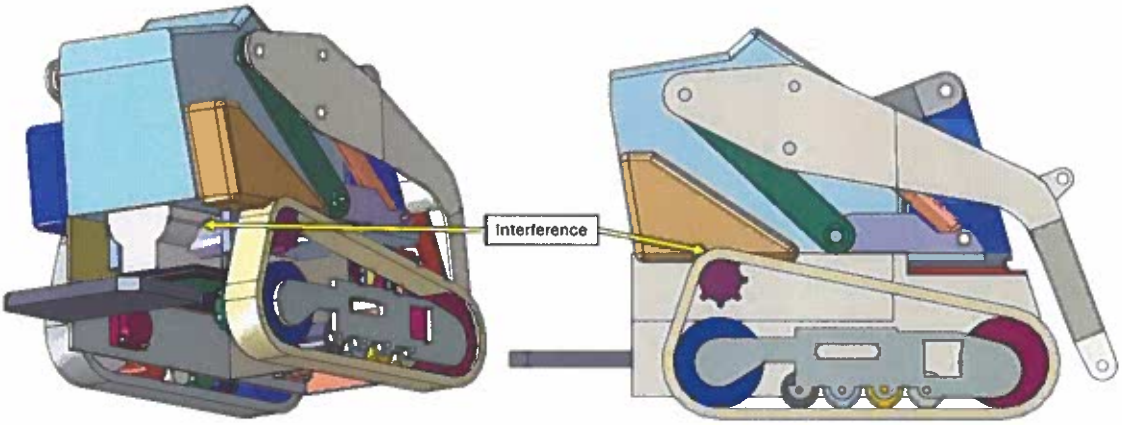

Given these issues, a POSITA would not be motivated to combine the track system of Bares with KR996-JP705 machine, and would not have a reasonable expectation of success in doing so.

119. Further, even if a POSITA had considered the potential benefits of replacing the tires of the KR996-JP705 machine with tracks, the critical loss of the

key removability feature associated with the tires' interaction with the bogie and the additional complications and substantial re-design work required to achieve this modification would substantially outweigh any potential benefit that could possibly be gained by replacing the tires. This further confirms that a POSITA would not have had a motivation to modify KR996-JP705 as Dr. Velinsky asserts.

C. A Person of Ordinary Skill in the Art Would Not have been Motivated to Further Alter the KR996-JP705-Bares Machine based on Beltrami.

120. For some of the Challenged Claims, Kubota and Dr. Velinsky rely on a further combination of the KR996-JP705-Bares machine with U.S. Patent No. 3,586,195 ("Beltrami"). Specifically, Dr. Velinsky asserts that Beltrami's teachings would have motivated a POSITA to alter the KR996-JP705-Bares machine by relocating the pivot points to a position lower on the machine. *See* Ex. 1003 at ¶¶ 147-152.

121. Beltrami does not provide the teaching that Dr. Velinsky suggests. Beltrami teaches the benefits of transitioning to a vertical-lift linkage (shown, for example in Figure 2) on a full-size skid steer machine from a conventional radial-lift linkage, such as that depicted in Figure 1 below.

PRIOR ART Fig. 1

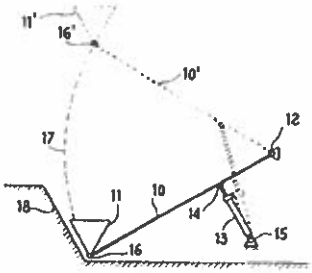

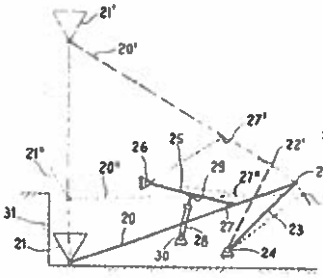

Fig. 2

Ex. 1008 at Fig. 1, Fig. 2, 2:41–3:7 (describing the drawbacks of the convention radial-lift configuration shown in Fig. 1), 3:8–45 (describing the advantages of a vertical-lift configuration shown in Fig. 2 over the conventional radial-lift configuration shown in Fig. 1).

122. In other words, Beltrami teaches the advantage of replacing a radial-lift system with a vertical-lift system. Because KR996-JP705-Bares already incorporates a vertical-lift system, it therefore already enjoys the benefits allegedly taught by Beltrami. A POSITA would not, therefore, be motivated to look to Beltrami to incorporate a technology that KR996-JP705-Bares already implements.

123. To support his position, Dr. Velinsky asserts that "Beltrami describes that benefits of positioning the location of these pivot point attachments low on the equipment include decreasing the frame requirements and maintaining a low center of gravity." Ex. 1003 at ¶149 (citing Ex. 1008 at 3:35–41). *This is wrong.* Dr. Velinsky fundamentally misunderstands the teachings of Beltrami.

124. Historically, engineers placed the pivot point for radial-lift machines as high as possible on the mainframe to maximize lift height:

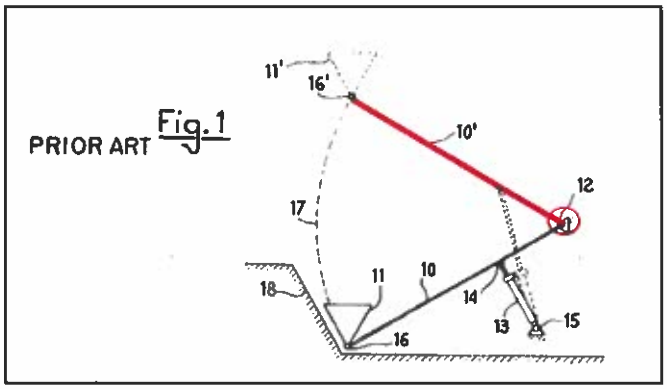

Ex. 1008 at Fig. 1, 2:63–68 (discussing the "inconveniently high level" of the pivot point 12 in radial lift machines, which would necessarily require the supporting frame to extend to at least the height of this point) (annotation added). Beltrami teaches that by transitioning to a vertical lift configuration, the pivot points can be lower than they would be for an equivalent radial-lift machine. Ex. 1008 at 3:35–38 (discussing one advantage of vertical lift or radial lift is allowing the pivot points to be lower on the machine so "that no supporting frame is needed").

125. Because KR996-JP705-Bares does not rely on a radial-lift loader arm mechanism and does not, therefore, incorporate an extended supporting frame at an "inconveniently high level," Beltrami's instructions to do away with a structure that already does not exist on the KR996-JP705-Bares device would have no relevance to a POSITA. Accordingly, a skilled artisan would not seek out Beltrami to solve a

problem that does not exist for the KR996-JP705-Bares device—namely, a radial lift loader arm.

126. Dr. Velinsky's assertion that Beltrami teaches the advantage of pursuing a *low* center of gravity is also wrong. The portion of Beltrami Dr. Velinsky relies on actually addresses a different issue, that being the forward and aft shifting of the center of gravity that a radial lift machine experiences when it lifts a load. Ex. 1008 at 2:69–72 ("Further ill-effects of the already known drive means are to be traced back to the shiftings of the equipment gravity center in respect to a vertical plane when the bucket is being lifted, which results in a marked instability of the equipment . . . .").

127. Because the loader arm on a radial-lift machine travels in an arcuate path, the weight of a load moves further forward of the machine during lifting and causes the center of gravity of the machine to shift forward. This forward shift in the center of gravity of the machine posing a tipping risk. Beltrami explains that transitioning to a vertical lift path avoids the center of gravity shift, thereby decreasing the risk of tipping. Beltrami goes on to recognize that it may sometimes be advantageous to design a path for the machine's arm that allows it to be close to the machine when low and far away when at the top of its travel. Ex. 1008 at Fig. 6, 5:50–54 ("[w]ith the considered grabbing bucket it is particularly important to have a bucket path with a lowermost position very close to [the] tractor and an

uppermost position as far as possible therefrom."). Because this configuration would cause the very same shifting center of gravity problems Beltrami identified with radial machines, Beltrami proposes an embodiment with a moveable ballast (shaded in blue below) that shifts rearward as the machine lifts its load to counteract the forward tipping tendency. Ex. 1008 at 6:1–25. This further supports my view that Beltrami's discussion of the shifting center of gravity is forward and aft, not up and down as Dr. Velinsky suggests:

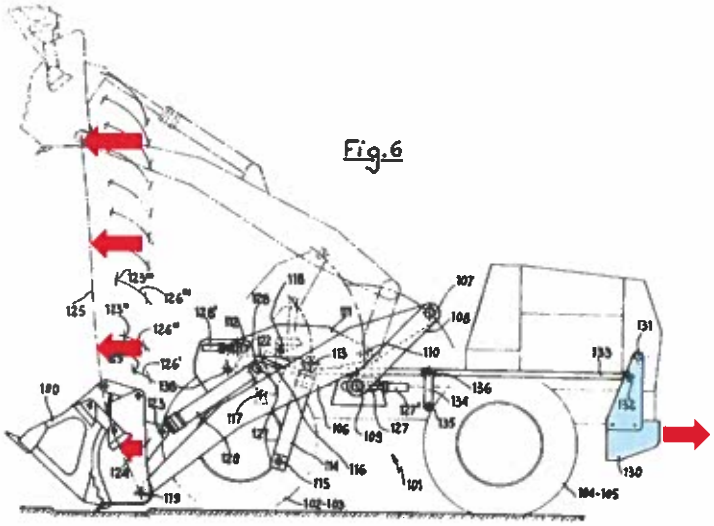

Ex. 1008 at Fig. 6 (annotations and shading added).

128. Put simply, KR996-JP705-Bares does not teach the concept of lowering the pins of a vertical lift machine or to lower the center of gravity of a machine. Dr. Velinsky's reliance on Beltrami for those teachings is simply misplaced.

129. Dr. Velinsky cites to four references that he claims corroborate his perspective on Beltrami. Ex. 1003 at ¶177. None of these references support Dr. Velinsky's assertions regarding Beltrami.

130. The first reference, Hoechst (Ex. 1012), teaches the use of a high rear support structure ("frame upright or boom support 20") to accommodate a high rear pivot pin location (32):

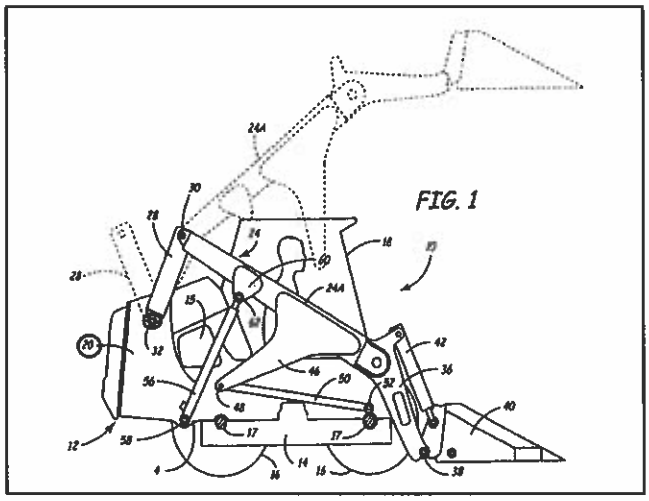

Ex. 1012 at Fig. 1, 2:30–34. Hoechst's incorporation of a rear frame upright tends to *increase* the height of the machine and raise its center of gravity. Moreover, Hoechst teaches making changes to provide for a <u>*longer*</u> hydraulic cylinder throw. Ex. 1012 at 3:53–55; Ex. 1003 at ¶178. This directly contradicts Beltrami's opposite teaching that using a <u>*shorter*</u> hydraulic cylinder throw is more advantageous. Ex. 1008 at 3:41–45 ("It is clear that by connecting the connecting jack 28 to the middle of the connecting rod, a relatively short-stroke movement is obtained. Such a short-

stroke movement permits use of a sturdier lifting arm or jack than is employed with prior art devices."). Contrary to Dr. Velinsky's assertions, Hoechst does not lend any credibility to his reliance on Beltrami.

131. Dr. Velinsky also cites to Komatsu (Ex. 1011) to support his assertion regarding Beltrami. Specifically, Dr. Velinsky asserts that Komatsu teaches "that lowering attachment points of linkages of a vertical lift arm can increase visibility and stability." Ex. 1003 at ¶177. Like Beltrami, however, Komatsu is simply pointing out the advantages of moving from a radial-lift design (shown in Figure 13 of Komatsu) to a vertical-lift design (*e.g.* Figure 1). Again, because KR996-JP705-Bares is not a radial-lift machine, a POSITA would not have been motivated to apply Beltrami (or the parallel teaching from Komatsu) to change the design in KR996-JP705-Bares, which already incorporates a vertical-lift mechanism.

132. Dr. Velinsky also cites to Bares '568 (Ex. 1009) to support his assertion regarding Beltrami. Ex. 1003 at ¶177. Specifically, Dr. Velinsky asserts that Bares '568 teaches "lowering the pivot point attachments of a loader for 'visibility' and 'lowering the center of gravity.'" *Id.* Bares '568 contains no such teaching. Bares '568 is a radial lift machine and, therefore, teaches that "it is desirable to have the pivot points for the boom near the rear of the small loader *and relatively high so that reach is adequate for operation* . . . ." Ex. 1009 at 1:23–25 (emphasis added). Because the loader arms are attached so high on the mainframe and can block side

visibility, Bares '568 discloses shaping the loader arms "to have side portions at a low level" to "insure good side-to-side visibility for the operator" when the arms are raised. *Id.* at 1:25–26, 1:31–41, 2:55–67, Fig. 1 (showing high pivot point and specially shaped arms), Fig. 6 (close-up of arm shape allowing for improved visibility). Contrary to Velinsky's assertion, the disclosure of Bares '568 does *not* teach the importance of lowering the center of gravity of a machine.

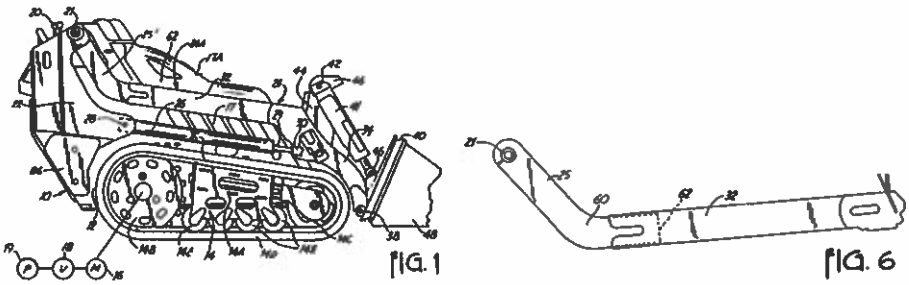

133. Finally, Dr. Velinsky cites to JP705 to support his conclusions regarding Beltrami. Ex. 1003 at ¶177. Specifically, he asserts that JP705 "confirms a desire to provide a mainframe that is 'lightweight.'" *Id.* But, JP705 teaches achieving that goal by simplifying the internal configuration of the mainframe—which may even cause the center of gravity of the machine to rise by reducing weight down low. JP705, therefore, does not teach moving the center of gravity of a machine down and does not support Dr. Velinsky's conclusions about Beltrami.

134. Another problem with Dr. Velinsky's assertions comes from KR996 itself, because it affirmatively teaches <u>*away*</u> from lowering the existing locations of

the pivotal connections to its loader arm. As discussed above, KR996 discloses a construction vehicle with a complicated, hydraulically activated mechanism for "quickly" attaching and detaching a loader arm attachment and breaker assembly.

135. KR996 discloses the attachment mechanism as a vital aspect of the invention:

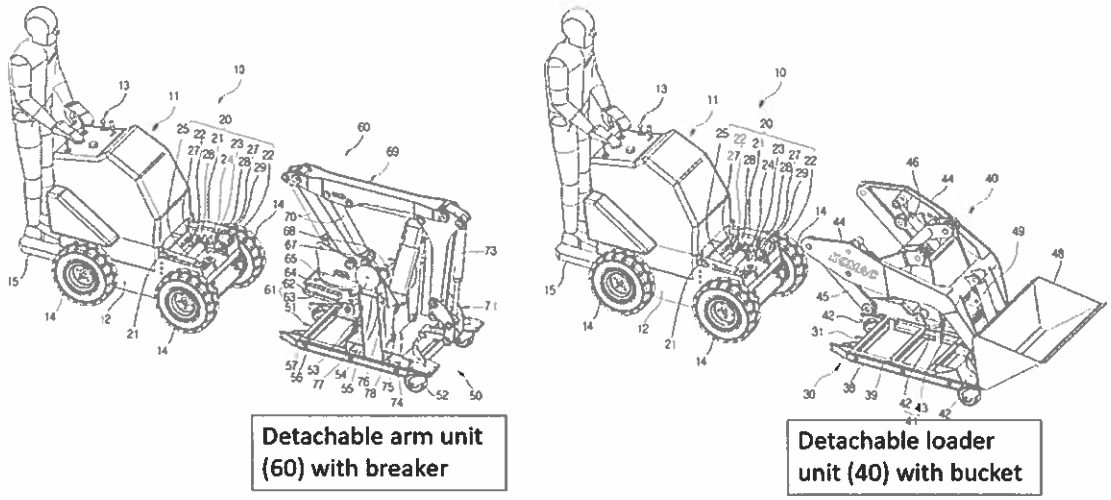

Ex. 1005 at Fig. 14 (annotation added), Fig. 1 (annotation added), [0012] ("The purpose of the present invention is to provide construction equipment for green building deconstruction work, which enables the easy and quick attachment and detachment of a bucket and a breaker with a single vehicle, to solve the aforementioned problems."), [0013] ("Another object of the present invention is to provide construction equipment for green building deconstruction work, which allows the boom assembly, bucket attachment, and bucket combined loader unit as

a whole, and the boom assembly, breaker attachment, and breaker combined arm unit as a whole to be selectively detachable . . . .").

136. The detachability feature and the hydraulic mechanism responsible for achieving this functionality are repeatedly emphasized throughout the disclosure of KR996 as the key inventive concept. *See, e.g., id.* at Abstract ("the present invention can easily and quickly detach the loader unit "), [0012] ("enables the easy and quick attachment and detachment of a bucket and a breaker with a single vehicle, to solve the aforementioned problems"), [0013] ("selectively detachable to the vehicle's detachable part"), [0088] ("easily and quickly detach"), [0069] ("The construction equipment for green building deconstruction work of the present invention, having such a configuration, allows the loader unit (40) or the arm unit (60) to be easily and quickly attached and detached from the vehicle (10).").

137. This key detachability feature of KR996 requires that the various components necessary to each individual attachment (*i.e.,* the loader/bucket unit and the breaker unit) be self-contained, discreet, and detachable from the main vehicle (10) through an intermediate attachment mechanism.

138. The detachable loader/bucket unit includes a four-bar mechanism in which the linkages and actuator are attached to detachable fixture (41), rather than the main body (11) of the machine, as shown below:

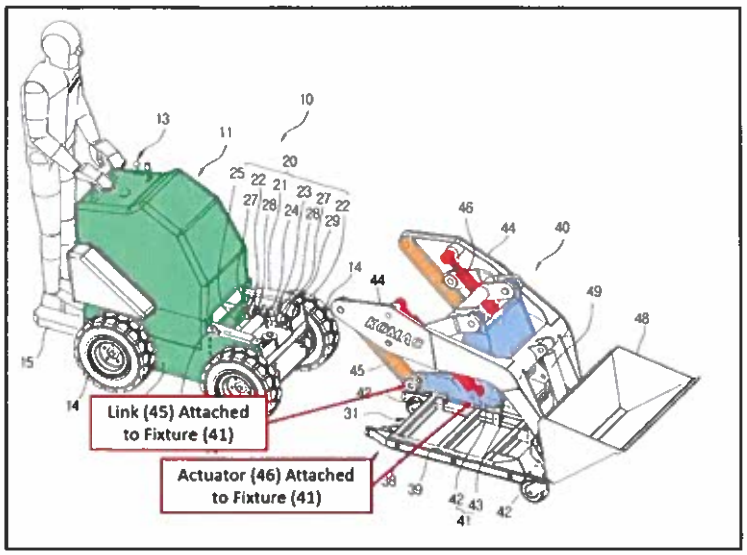

Ex. 1005 at Fig. 1 (shading and annotations added).

139. In light of this specific design, a POSITA would recognize that KR996 teaches the importance of keeping pivot points *high* on the machine so there is room for the hydraulically actuated mechanism that enables the quick attachment and detachment system that KR996 presents as the key inventive feature of the machine.

140. Moreover, a POSITA would also recognize that any attempt to move the pivot point locations off of the removeable fixture (41) and onto the main body (11) (shaded green), would destroy the critical removability feature touted as the key inventive concept. Therefore, KR996 teaches against making significant changes to the location of the pivot points of the loader arm, contrary to Dr. Velinsky's assertions.

141. Even if a POSITA had extracted some potential reason to lower the pivot points from Beltrami as Dr. Velinsky asserts, this critical loss of the key

removability feature would substantially outweigh any potential benefit that could possibly be gained by such a modification. This further confirms that a POSITA would not have had a motivation to modify KR996 as Dr. Velinsky asserts.

142. Furthermore, even if a POSITA would have been motivated to lower the pivot points of KR996 as Dr. Velinsky suggests, they would not have had a reasonable expectation of success. The machine design disclosed in KR996 simply does not have sufficient space on the main body (11) of the machine to accommodate the repositioning that Dr. Velinsky suggests.

143. As part of my work in this matter, I created a three-dimensional (3D) computer aided design (CAD) model of the vehicle using the drawings in the KR996 patent.

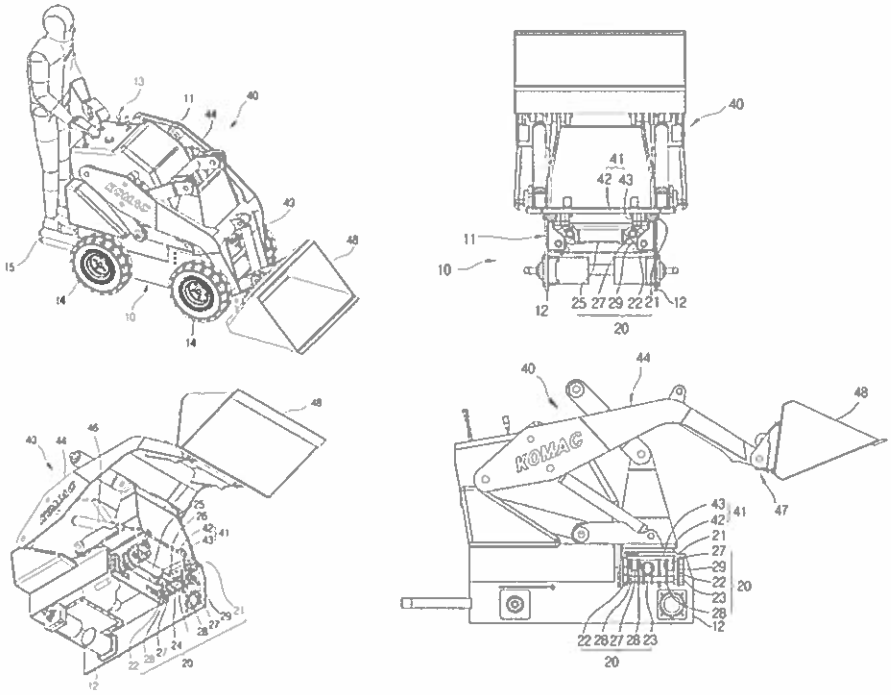

Ex. 1005 at Figs. 8, 11–13.

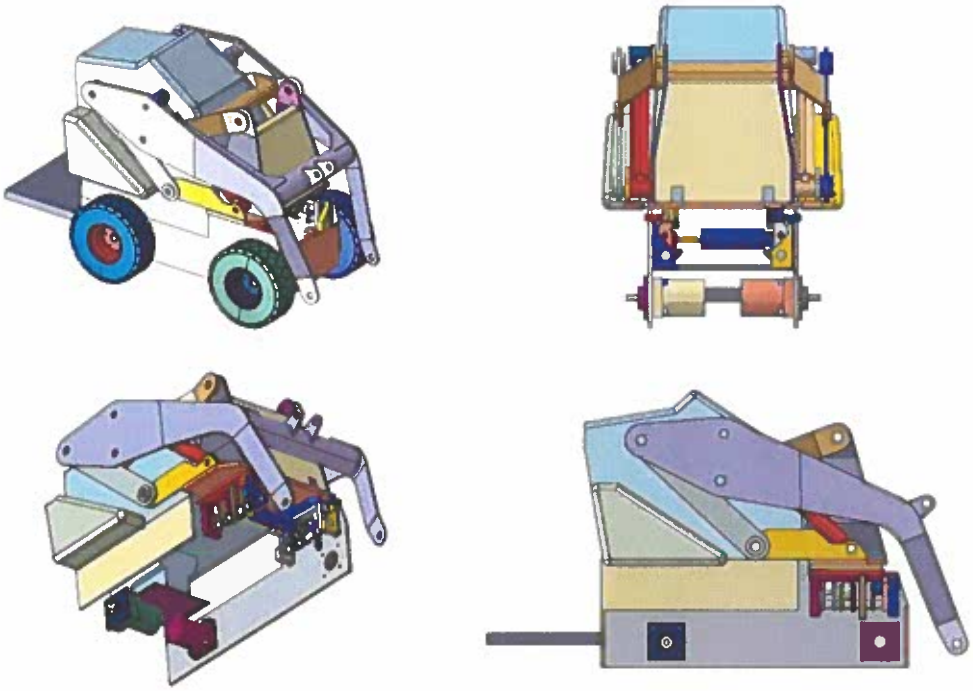

KR996, various views of CAD model.

144. KR996 teaches a vehicle with four wheels driven by a motor or drive unit at each wheel. The drive units are mounted to the inside of the vertical walls of the lower frame, as shown in Figure 18. KR996 does not specify the method of attachment, but a POSITA would understand that the presence of a flange with holes in each corner would be for bolting the drive motors (shaded in red below) to the lower frame.

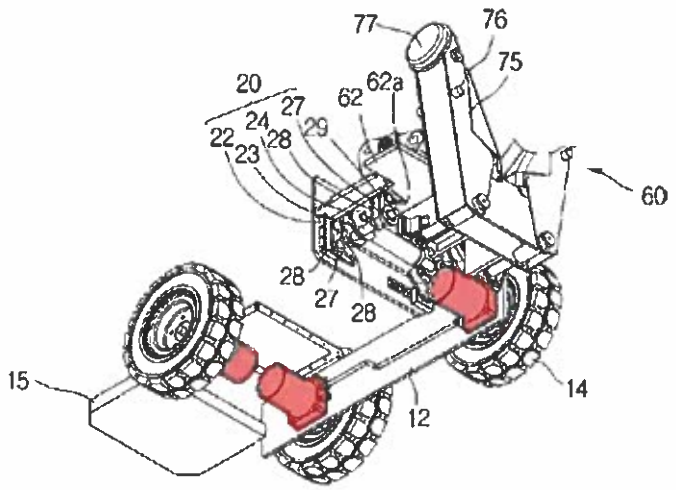

Ex. 1005 at Fig. 18 (shading added).

145. The drive units are powered by a central engine located in the rear of the lower frame (Fig. 12). KR996 does not specify whether the central engine is an internal combustion engine or an electric motor, but a POSITA would understand that the triangular-shaped protruding structures on either side of the vehicle above the rear wheels are consistent with tanks for fuel and hydraulic oil. Additionally, the absence of a large, brick-shaped battery on any of the drawings indicates that it is not an electric motor.

146. My CAD model of the KR996 included modeling the mechanism for clamping the attachments to the mainframe.

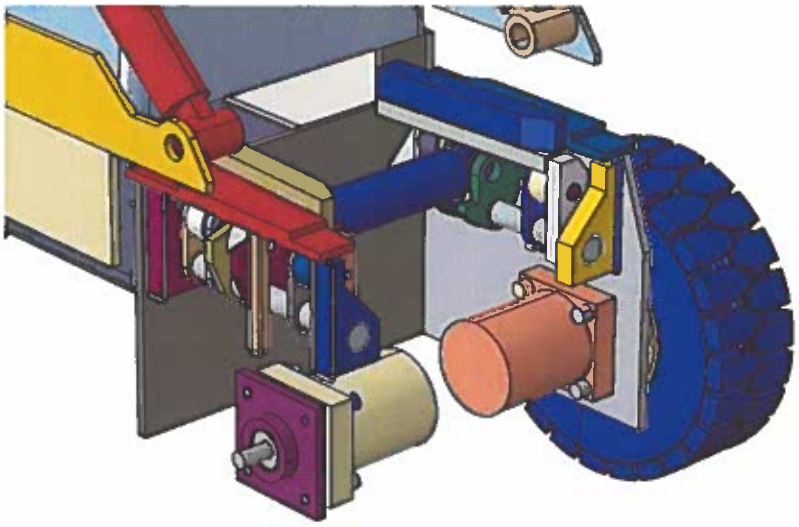

KR996 CAD model attachment structure and front drive motors.

147. The pivot points for the links and lift cylinder are located on the removable loader attachment. As shown in the figure below, the rear link pivot and the lift cylinder pivot are positioned near the bottom of the loader attachment. The front link pivot is positioned in the upper part of the loader attachment. As also depicted below, the forward part of the mainframe houses the hydraulic mechanism for clamping the attachment to the mainframe of the vehicle and also the drive motors for both front wheels.

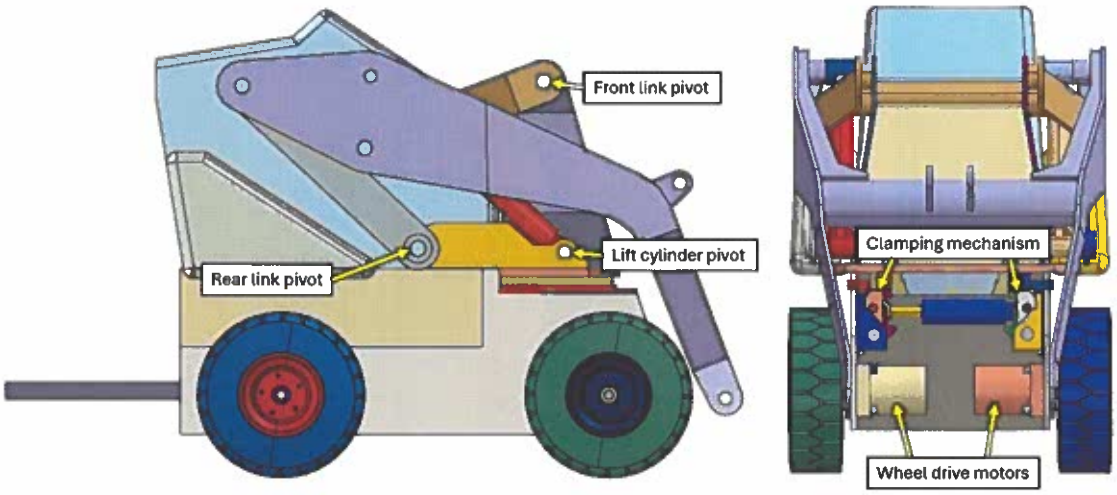

KR996 CAD model (annotated).

148. Lowering the rear link pivot and the lift cylinder pivot would require lowering the hydraulic clamping mechanism that is mounted inside the mainframe. However, there is already limited clearance between the lower part of hydraulic clamping mechanism and the top of the mounting flange for the wheel drive motors. The configuration of the machine, including the hydraulic clamping mechanism presented as key to the invention, leaves no space for lowering the attachment or any of its pivot points.

149. Dr. Velinsky did not consider or address any of these issues in proposing the modified version of KR996 shown below:

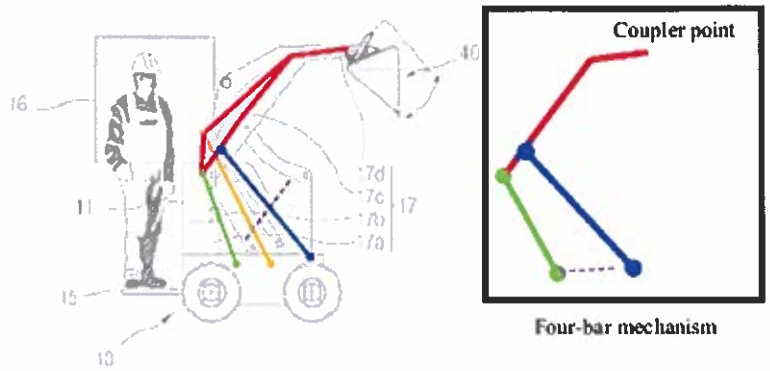

EX1005, FIG. 21
(annotated)

Ex. 1003 at ¶185, ¶¶181–199; Ex. 1004 (animation).

150. Dr. Velinsky testified that he did not create this hypothetical modified version of KR996 and instead relied on Kubota's legal counsel to decide how the pivot points would be positioned. Ex. 2021 at 14:12–17:11. Kubota's attorneys then handled the work of designing the linkage configuration (pivot points, actuator length, linkage lengths, etc.) that appears in Dr. Velinsky's declaration. *Id.* at 15:1–17:11. Dr. Velinsky also conceded that he did not consider the internal components or space constraints associated with KR996 or whether the modifications he proposed would be compatible with that machine. *Id.* at 134:4–25.

151. I also disagree that a POSITA would be motivated to make the changes proposed by Kubota and Dr. Velinsky because their hypothetical modified machine incorporates a longer actuator (yellow in the figure above). Kubota and Dr. Velinsky suggest that a POSITA would rely on Beltrami to make the changes they propose in

their modified machine, but their modified machine directly contradicts the teaching in Beltrami that the actuator should be *shortened*. Ex. 1008 at 3:41–45.

152. Moreover, Kubota and Dr. Velinsky's modified machine also incorporates an actuator that is attached *directly to the loader arm*, whereas Beltrami teaches that the actuator should be connected *to an intermediate linkage* to achieve the shorter, beneficial actuator throw. *Id.* ("It is clear that *by connecting the connecting jack 28 to the middle of the connecting rod*, a relatively short-stroke movement is obtained. Such a short-stroke movement *permits use of a sturdier lifting arm or jack* than is employed with prior art devices.") (emphasis added).

153. It is my opinion that Kubota and Dr. Velinsky selectively adopted aspects of Beltrami's teachings where necessary to serve their goal of satisfying the limitations of the asserted claims, but then ignored other important teachings from that same reference which would have led a POSITA *not* to develop the hypothetical machine they propose.

154. Even if a POSITA would have been motivated by Beltrami to modify KR996 as Dr. Velinsky suggests (they would not), and it were possible to overcome the aforementioned spacing conflicts presented by Dr. Velinsky's hypothetical alternative design (it is not), my modeling of his design also indicates that it would not work for its intended purpose. Specifically, the bucket of the new design would not be able to lower to the ground (a necessary prerequisite for useful operation of a

compact utility loader) because it interferes with the vehicle's frame, tires, and the water tank, as shown below:

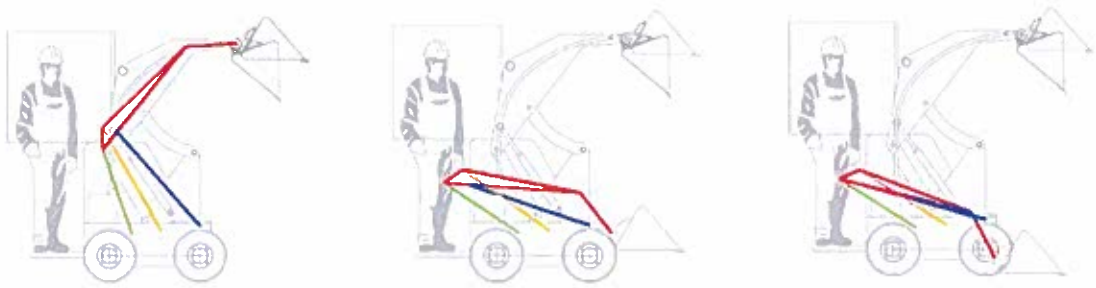

Ex. 1004 (animated version created by Kubota's counsel). I also analyzed Dr. Velinsky's further modified design (combining KR996 with Bares and Beltrami) and determined that it is even more flawed. As shown below, when operated, the bucket of this second design only lowers to roughly shoulder height and then quickly pitches almost directly backward toward the operator.

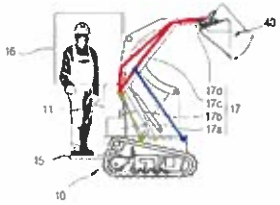

Velinsky modified track vehicle with lowered pivot points

Figure A (annotated) with lowered pivot points

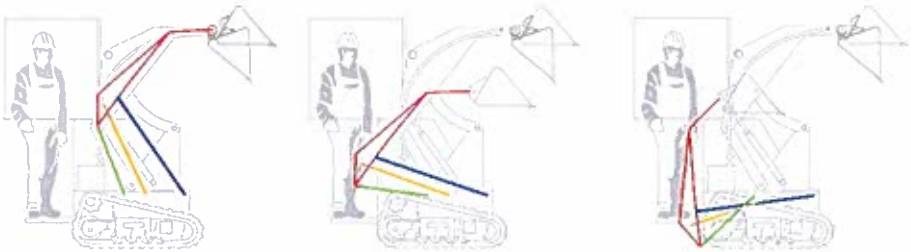

Ex. 2036.

A POSITA would consider this design to be a failure and to pose a significant safety risk to the operator. My exercise of reviewing Kubota's proposed designs supports my opinion that a POSITA with two years of design experience would be incapable of making the significant alterations to KR996 that Kubota and Dr. Velinsky propose.

155. As seen above, this flawed configuration also results in the loader arms and their pivotal connections to the hydraulic cylinder and linkages extending beyond the rear of the machine into the area where the operator is located. This configuration presents significant safety risks (*e.g.*, the potential of severing the operators arm or leg) that a POSITA would know to avoid when designing machines of this kind.

156. For all these reasons, I disagree with Dr. Velinsky's conclusion that modifying the KR996 vehicle to lower the pivot points "would have been a straightforward and simple matter well within the skills of a POSITA during a typical vehicle design process." Ex. 1003 at ¶152. Instead, for the reasons described above and below in the context of the various asserted grounds, a POSITA (a) would not have been motivated by Beltrami to make any alterations or modifications to the KR996 machine, (b) would have been affirmatively taught by KR996 *not* to destroy the critical removability feature of that invention by moving the pivot points off of the fixture (41) and onto the main body (11) of the machine, and (c) would not have

had a reasonable expectation of success in making the changes proposed by Dr. Velinsky due to the spacing constraints, fundamental limitations in range of functionality, and safety risks presented by that alternative design.

XI. KUBOTA'S GROUND 1 ARGUMENTS FAIL

A. The Combination of KR996 and JP705 Fails to Disclose the Linkages and Actuator Attached to the *Mainframe*, as Required by Claims 50-54.

157. In Ground 1 of its Petition, Kubota asserts that claims 50–54 of the '386 Patent are obvious in light of the combination of KR996 and JP705. For the reasons described below, I disagree that the subject matter defined in these claims would have been obvious to a POSITA in light of KR996 and JP705.

158. First, as discussed above, a POSITA would not have been motivated to combine the teachings of KR996 and JP705 to make the modifications suggested by Kubota and Dr. Velinsky.

159. Second, even if a POSITA would have modified the KR996 machine to include the engine bracket of JP705, this modified machine would fail to satisfy at least the following limitations of claims 50–54:

- "a first linkage *pivotally attached to the first side of the mainframe* and pivotally attached to the first loader arm"
- "a second linkage *pivotally attached to the first side of the mainframe* and pivotally attached to the first loader arm"

- "an actuator *pivotally attached to the first side of the mainframe* and pivotally attached to the first loader arm"

160. All these limitations require pivotal connections between the "mainframe" and a linkage or actuator connected to the loader arm. The locations of these pivotal connections on the mainframe are depicted, for example, in Figures 1 and 5:

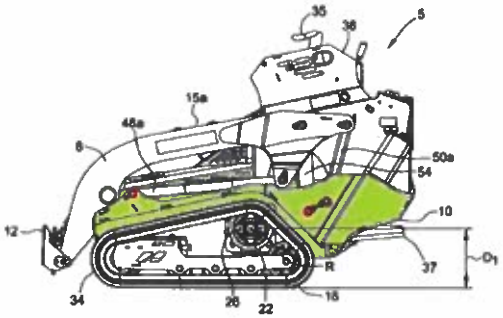

FIG. 2

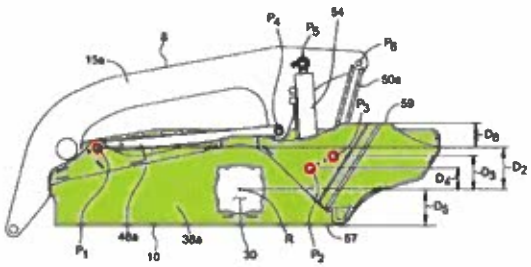

FIG. 5

Ex. 1001 at Figs. 2, 5 (mainframe shaded green, pivotal connections indicated by red circles).

161. As discussed above, the Board has preliminarily determined (and I agree) that a POSITA would interpret the term "mainframe" to mean "the *primary* supporting structure" of the machine.

162. Dr. Velinsky does not expressly identify a construction for any of the terms of the '386 Patent, including "mainframe." Ex. 1003 at ¶49. But in attempting to apply the claim terms to the KR996 reference, he adopts the following definition

for "mainframe": "body of the compact tool carrier that supports the loader." *Id.* at ¶ 76. I understand that the Board rejected this proposed meaning of "mainframe." Institution Decision at 19–25, 34 (preliminarily construing "mainframe" as "a primary supporting structure" and rejecting arguments not using this construction).

163. To present their obviousness positions, Dr. Velinsky and Kubota argue that multiple discrete components disclosed in KR996, when combined, constitute a "mainframe." Ex. 1003 at ¶76 ("KR996 provides a mainframe that includes main body 11 of KR996 and its sides 12 *as well as other portions of KR996's illustrated vehicle such as those portions that support the loader by providing attachment to the actuator and links that mount the loader to the vehicle*.") (emphasis added); Petition at 31, fn. 4 (same).

164. Similarly, to satisfy the pivotal-attachment limitations appearing in claims 50–54, Kubota and Dr. Velinsky assert that the removable fixture (41) constitutes part of the "mainframe" of the machine. *See, e.g.,* Petition at 36–39; Ex. 1003 at ¶¶ 90–101, 105–109, 153.[3]

---

[3] It is worth noting that Dr. Velinsky applied a different interpretation of the term mainframe than the one preliminary adopted by the Board. That alternative interpretation did <u>*not*</u> require the mainframe to be the "primary" frame of the machine.

165. The removable fixture Kubota and Dr. Velinsky assert constitutes a part of the "mainframe" is depicted below in blue:

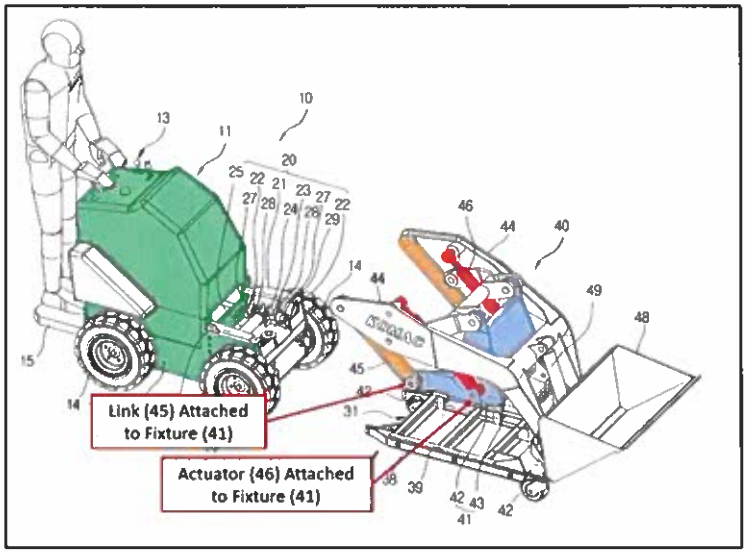

Ex. 1005 at Fig. 1 (shading and annotations added).

166. I disagree with Kubota and Dr. Velinsky's contention that the blue component above constitutes part of the mainframe. A POSITA would not consider the detachable fixture (41) to be a part of the mainframe (*i.e., primary* supporting structure) of KR996's machine.

167. A POSITA would understand that the *primary* supporting structure of KR996 is the "main body (11)" of the machine that is present during *all* phases of the machine's operation.

168. As discussed above, the machine described in KR996 operates in a number of different modes. Dr. Velinsky agrees with this assessment of KR996. Ex. 2021 at 84:23–86:3.

169. During many of those modes (*e.g.*, when (1) neither attachment is mounted, (2) the breaker unit attachment is mounted or (3) when the machine is performing its attaching or detaching function) the machine is operated with the structure Kubota and Dr. Velinsky call the "mainframe" *completely disconnected from the machine*.

170. KR996 expressly teaches that fixture (41) is routinely detached from the machine and left aside while the machine performs other work. Ex. 1005 at Abstract ("Therefore, *the present invention can easily and quickly detach the loader unit with a bucket and the arm unit with a breaker installed on a vehicle*, thereby greatly reducing the economic burden of purchasing expensive heavy equipment, and significantly saving time and expenses for the maintenance of heavy equipment.") (emphasis added), [0001], [0011], [0012] ("The purpose of the present invention is to provide construction equipment for green building deconstruction work, *which enables the easy and quick attachment and detachment of a bucket and a breaker with a single vehicle*, to solve the aforementioned problems.") (emphasis added), [0013].

171. Accordingly, a POSITA would consider fixture (41) to be secondary structure, in contrast to the true "mainframe"—that being the "main body (11)"—which is present during all modes of operation (shaded in green below:

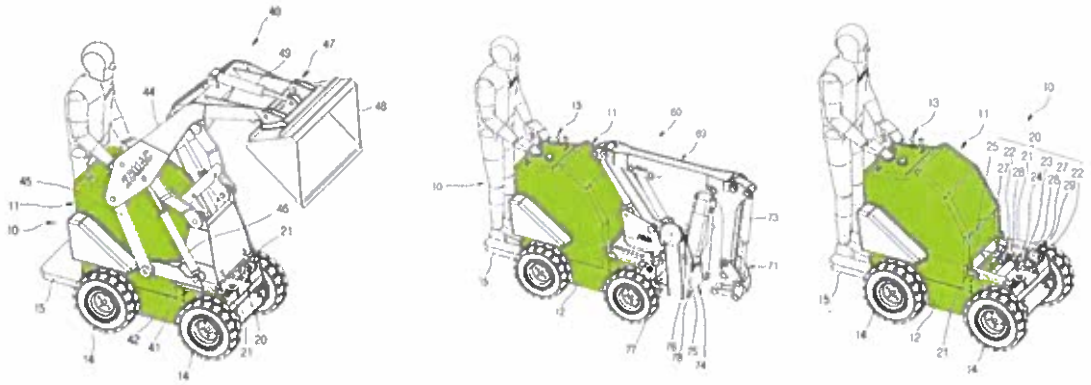

Ex. 1005, Figs. 1, 9, 19 (shading added).

172. KR996 expressly corroborates this perspective by distinguishing fixture (41) from the "main body (11)" in descriptions of the invention. Ex. 1005 at [0018], [0043], [0054], Fig. 1.

173. For the reasons set forth above, the combination of KR996 and JP705 does not satisfy all of the limitations of claims 50–54 and therefore does not render those claims obvious.

B. The Combination of KR996 and JP705 Fails to Disclose the Linkages and Actuator Attaching to a *Single-Weldment Mainframe*, as Required by Claim 52.

174. Dependent claim 52 requires that the "mainframe incorporates a single weldment." This additional claim limitation requires tha tall of the portions o the mainframe constitute a single, unitary weldment, as shown, for example, in the embodiment shown in Figure 4 of the '386 Patent. As discussed above, Kubota and Dr. Velinsky argue that multiple discrete structures from the machine disclosed in

KR996 constitute the "mainframe" (e.g., the main body (11) combined with fixture (41) of the detachable loader unit). Therefore, for claim 52, they argue a POSITA would have been motivated to weld the various components of the "mainframe" together to create a single weldment.

175. In support of this position, Kubota and Dr. Velinsky rely on the fact that welding is "a well-known method of attachment" and that JP705 teaches the use of a welded mainframe. *See* Petition at 46–47; Ex. 1003 at ¶¶121–126. Kubota and Dr. Velinsky fail, however, to provide any motivation for a POSITA to weld the fixture (41) to the main body (11) of the KR996 machine.

176. To the contrary, KR996 teaches *away* from fusing fixture (41) to the main body (11) of the machine. A POSITA would recognize that welding those components together would destroy the key detachability feature that characterizes the KR996 invention. Ex. 1005 at Abstract, *see also id.* at [0001], [0011]–[0015].

177. Because there is no motivation to combine the teachings of KR996 and JP705 as Kubota and Dr. Velinsky suggest, and because KR996 affirmatively teaches away from permanently fusing its purposefully detachable components together, the combination of KR996 and JP705 would not have rendered obvious the subject matter of claim 52.

XII. KUBOTA'S GROUND 2 ARGUMENTS FAIL

178. In Ground 2 of its Petition, Kubota asserts that claims 55-63, 68-69, and 80-85 of the '386 Patent are obvious in light of KR996, JP705, Bares, and Beltrami. For the reasons discussed below, I disagree that the subject matter defined in these claims would have been obvious to a POSITA in light of KR996, JP705, Bares, and Beltrami.

179. First, as discussed above in Section X.A, a POSITA would not have been motivated to combine the teachings of KR996 and JP705 to make the modifications suggested by Kubota and Dr. Velinsky.

180. Second, as discussed above in Section X.B, a POSITA would not have been motivated to combine the teachings of KR996-JP705 with Bares to make the modifications suggested by Kubota and Dr. Velinsky, and a POSITA would not have had a reasonable expectation of success in doing so.

181. Third, as discussed above in Section X.C, a POSITA would not have been motivated to combine the teachings of KR996-JP705-Bares with Beltrami to make the modifications suggested by Kubota and Dr. Velinsky, and a POSITA would not have had a reasonable expectation of success in doing so.

A. The Combination of KR996, JP705, Bares, and Beltrami Fails to Disclose the Linkages and Actuators Attached to the *Mainframe*, as Required by Claims 55-63, 68-69, and 80-85.

182. Moreover, even if a POSITA would have modified the KR996 machine in light of JP705, Bares, and Beltrami, the resultant modified machine would fail to satisfy the limitations reciting linkages and actuators attached to the mainframe, including at least the following limitations of claims 55-63, 68-69, and 80-85:

- "the first side *of the mainframe* having at least two pivot points relative to the loader" (claims 55-63, 68-69, and 80-85);
- "a linkage *pivotally attached to the first side of the mainframe* and pivotally attached to the loader arm" (claims 55-63, 68-69, and 80-85);
- "an actuator *pivotally attached to the first side of the mainframe* and pivotally attached to the loader arm" (claims 55-63, 68-69, and 80-85);
- "a second linkage *pivotally attached to the first side of the mainframe* at a pivot point and pivotally attached to the loader" (claims 57-60);
- "the pivot point at which the linkage is *attached to the mainframe*" (claims 55-63, 68-69, and 80-85);
- "the pivot point at which the actuator is *attached to the mainframe*" (claims 55-63, 68-69, and 80-85);
- "the first side *of the mainframe having at least two pivot points* relative to the loader" (claims 55-63, 68-69, and 80-85);

- "wherein the *mainframe comprises a forward-most pivot point* with (1) the pivot point at which the first linkage is *attached to the mainframe*, (2) the pivot point at which the actuator is *attached to the mainframe*, or (3) the pivot point at which the second linkage is *attached to the mainframe* being the forward-most pivot point" (claims 58, 59, 60);
- "the pivot point at which the actuator is *attached to the first side of the mainframe* being above the rotational axis" (claim 68)
- "wherein the pivot point at which the linkage is *attached to the first side of the mainframe* is disposed above the tracks or wheels" (claim 69).

183. For these limitations, Kubota and Dr. Velinsky rely on the same assertions made in connection with Ground 1—namely that fixture (41) from the detachable loader arm unit constitutes a part of the "mainframe." *See* Petition at 59–61, 84–87, 90–93. As explained above in connection with Ground 1, a POSITA would understand that fixture (41) is secondary structure and not part of the primary supporting structure of the machine disclosed in KR996. For that reason, the combination of KR996, JP705, Bares, and Beltrami fails to disclose the limitations identified above, requiring a pivotal connection between the mainframe and the linkage(s) and actuator. Therefore, claims 55-63, 68-69, and 80-85 would not have been obvious to a POSITA in light of KR996, JP705, Bares, and Beltrami.

B. The Combination of KR996, JP705, Bares, and Beltrami Fails to Disclose the Linkages and Actuator Attaching to a *Single-Weldment Mainframe*, as Required by Claims 63, 82, and 85.

184. Dependent claims 63, 82, and 85 all require that the "mainframe incorporates a single weldment." For these limitations, Kubota and Dr. Velinsky incorporate their arguments regarding claim 52.

185. For the reasons discussed above with regard to claim 52, the combination of KR996, JP705, Bares, and Beltrami would not have rendered obvious the subject matter of claims 63, 82, or 85.

XIII. SECONDARY INDICIA OF NON-OBVIOUSNESS

186. I understand that other elements called "secondary indicia of non-obviousness" should also be considered in an obviousness analysis. It is my understanding that these elements often provide necessary context about the invention and its industry, both before the patent owner filed a patent application and after the invention is available for sale, and help to ward against the hindsight bias that can improperly affect the obviousness analysis.

187. I understand that secondary indicia of non-obviousness may include: (i) commercial success of the patented invention, (ii) skepticism of those having ordinary skill in the art at the time of invention, (iii) unexpected results of the invention, (iv) any long-felt but unsolved need in the art that was satisfied by the alleged invention, (v) the failure of others to make the alleged invention, (vi) praise

of the alleged invention by those having ordinary skill in the art, and (vii) copying of the alleged invention by others in the field.

188. I have reviewed evidence relevant to these secondary indicia of non-obviousness from the prosecution histories of Vermeer's patent, including the reexamination proceedings initiated by Toro and documents from Kubota produced in this case. This evidence further supports my opinions above that the claimed invention would not have been obvious to a POSITA based on the prior art and arguments presented by Kubota and Dr. Velinsky.

A. Commercial Success and Praise

189. The prosecution histories included evidence of commercial success and praise of products that practice the '386 Patent. I have reviewed this evidence, and it is consistent with my conclusion that the claimed invention was not obvious.

190. This evidence related to three early vertical-lift compact utility loaders: Vermeer's CTX50, Vermeer's CTX100, and Toro's TX1000.

Vermeer's CTX50

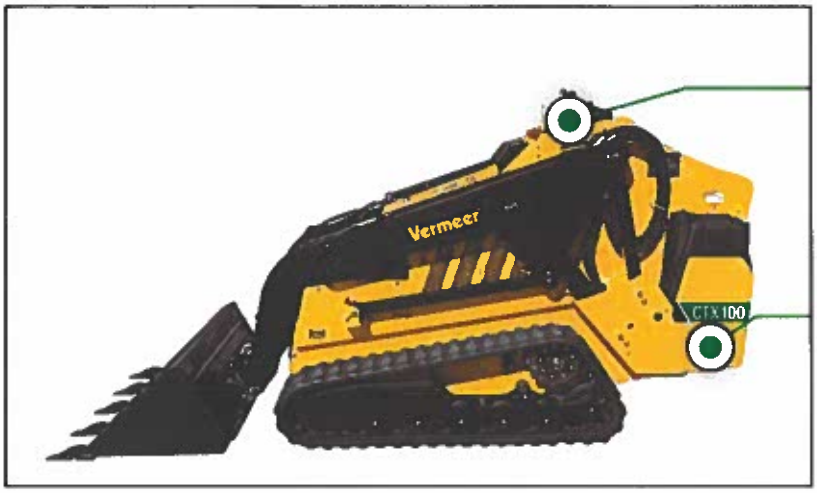

Vermeer's CTX100

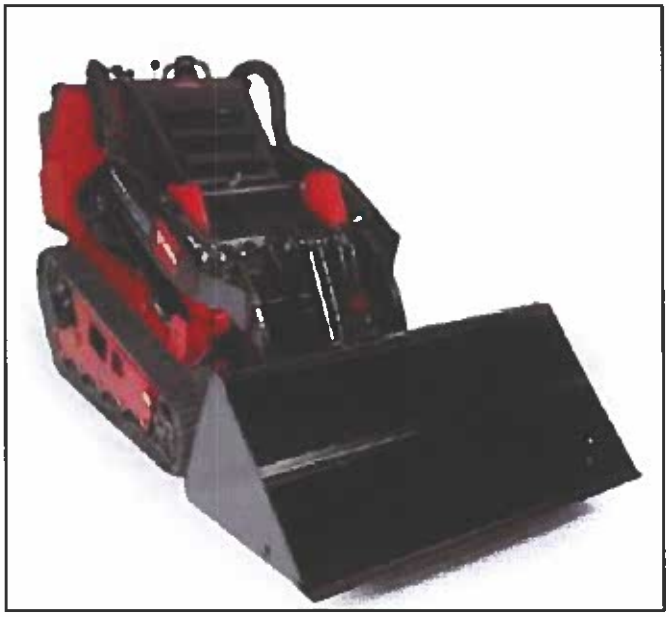

Toro's TX1000

191. Vermeer's CTX machines and Toro's TX1000 machines embody the features of the '386 Patent. This is shown, for example in Exs. 2023, 2024, and 2025.

192. The evidence I reviewed in the prosecution histories shows that the increased lift height and lift capacity made vertical-lift compact utility carriers garnered industry praise. For example, shortly after the release of the CTX50, Vermeer received an "Innovative Iron Award" from Compact Equipment Magazine. Ex. 2026 at 1–2; Ex. 1029 at 183. This award is given to companies "that have changed the commercial equipment market…with their unique, interesting, and innovative machines, engines, and technologies." Ex. 2026 at 1; Ex. 1029 at 183. Compact Equipment Magazine also celebrated Toro's TX1000 and noted that "Toro and Vermeer were the first manufacturers to introduce vertical lift to the compact tool carrier market." Ex. 2026 at 1–2; Ex. 1029 at 186. Compact Equipment Magazine specifically cited the vertical-lift path as an enhancement that made Vermeer's CTX50 a "game-changer." Ex. 2026 at 2; Ex. 1029 at 183.

193. This industry praise was consistent with the machine's commercial success. During the Toro reexaminations, Vermeer's Product Manager for compact utility loaders testified that the popularity of vertical-lift machines caused its total sales of compact utility loaders to double, and that the percentage of those sales comprising vertical-lift machines increased from 11% to 37% within the first three

years. Ex. 1030 at 128, 302. Toro's 2015 Annual Statement similarly boasted a significant increase in compact utility loader sales following the launch of its TX1000 machine. Ex. 1029 at 185.

B. Skepticism at the Time of Invention

194. The evidence submitted to the Patent Office during the reexaminations further shows that at the time of Vermeer's invention, there was skepticism within the industry that compact utility loaders could achieve meaningful vertical lift.

195. For example, Toro opined in internal documents that the ability to provide vertical lift would potentially be a "key differentiator" for a compact utility loader because it would provide "unprecedented" lift capacity. Ex. 1030 at 55. But Toro's engineers identified significant challenges inhibiting the development of a vertical-lift mechanism, including "failures" caused by "[l]oader arm complexity and durability," as well as the "[i]ncreased weight, cost, and time" required "to develop the arm." Ex. 1030 at 54.

196. Toro filed a patent application for its vertical-lift compact utility loader. In its application it noted that this loader-arm configuration had been "considered difficult if not impossible due to size and durability constraints."

[0007] Finally, the vertical reach of the loader arms on compact utility loaders is somewhat limited. While high lift loader arms are known on full size skid steer loaders as disclosed in U.S. Pat. No. 5,542,814, the use of such high lift loader arms on a compact utility loader has been considered difficult if not impossible due to size and durability constraints. Accordingly, it would be a further advance in the art to provide a way of safely and durably providing high lift loader arms on compact utility loaders to extend the vertical reach of such loaders. For example, this would allow a compact utility loader to dump debris or materials at higher elevations than previously, thus allowing the use of larger trucks to accept such debris or materials for transport.

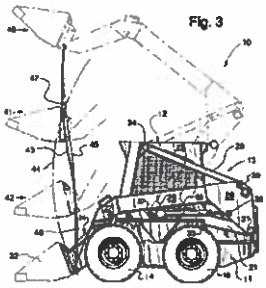

Ex. 2004 (Toro's U.S. Patent Pub. 2016/0244937A1); Ex. 2005 (U.S. Patent No. 5,542,814) at Fig. 3.

C. Unexpected Results of the Invention

197. The prosecution histories relating to the '386 Patent also contained evidence showing that the claimed invention surpassed expectations. For example, this evidence showed that the machine claimed in the '386 Patent achieved 32% *greater* lift capacity than its non-vertical lift counterpart. Ex. 1029 at 182. During reexamination of the '386 Patent, the Patent Office recognized that Vermeer's 32% increase in lift capacity—without increasing the machine's weight—"was unexpected." Ex. 1029 at 74.

D. Long-Felt but Unsolved Need and Prior Failures

198. I have also reviewed evidence of long-felt and unsolved need in the prosecution history record. Compact tool carriers have been commercially available since 1986. Ex. 1029 at 121, 173. The evidence showed customers desired greater lift capacity for these machines, but "not at the expense" of a heavier machine or wider footprint. Ex. 1030 at 39–41. The evidence also showed that prior to

Vermeer's invention, others attempted to solve the known problem of increasing lift capacity of compact tool carriers in a variety of ways.

199. For example, the prosecution history record shows that early attempts to solve this problem focused on shifting or adding weight to the rear of the machine. Ex. 1029 at 175. One way to do so was to weld weights to the rear of the machine. *Id.* To this day, manufacturers sell "weight kits" or "weight packages" as accessories to utility loaders of all sizes. *See* Ex. 1030 at 35. Customers have been adding makeshift weight kits to their own machines for years in an attempt to increase lift capacity. Ex. 1029 at 178.

200. Weight kits, however, only provide only a minimal increase in lift capacity while incurring the significant disadvantages of adding mass to the machine, such as higher costs (Ex. 1030 at 632), less ground clearance (Ex. 1029 at 177), and more damage to the terrain (Ex. 1031 at 46). *See generally* Ex. 1029 at 178. A relatively light weight is an important feature for compact utility loaders. Ex. 2021 at 35:4–15.

201. The evidence further shows that manufacturers tried to increase lift capacity by shifting the fuel tank to the rear of the machine. Ex. 1029 at 175.

202. Another attempt to increase lift capacity was the shift from walk-behind to stand-on or ride-on compact utility carriers. Stand-on compact utility carriers have an operator platform at the rear of the machine. Ex. 1001 at 3:39–41. This

solution added the operator's weight (a standard of 165 pounds) to the back of the machine. Ex. 1029 at 176. This, too, resulted in a minimal improvement to the lift capacity. Ex. 1029 at 175.

203. The prosecution history record shows that traditional methods of increasing lift capacity were minimally effective, and often resulted in a less desirable machine overall. Competitors in the industry tried, and failed, to find a novel solution for increasing lift capacity. For example, Toro spent years testing different modifications on compact utility carriers without thinking to employ a vertical-lift arm. Ex. 1031 at 16. Indeed, the Patent Office ultimately concluded, based on the evidence of Toro's attempts to solve the lift capacity problem, that Toro "did not find it obvious to employ a vertical lift loader arm arrangement on a CUL." *Id.*

E. Copying

204. I have reviewed internal documents produced by Kubota in this proceeding regarding the development of its first vertical-lift compact utility loader. These documents show that when Kubota designed its first compact utility loader it intentionally copied the vertical-lift loader arm configuration claimed in the '386 Patent.

1. Results from Kubota's Dealer Surveys

205. Vermeer and Toro were the first companies to launch vertical-lift compact utility carriers in 2015. Ex. 2026 at 1–2; Ex. 1029 at 186. At that time, Kubota had no compact utility loader on the market or in development.

206. In 2018, Kubota surveyed its dealers, distributors, and consumers regarding compact utility loaders. Ex. 2027 at 130–131. The questions primarily focused on the identity and strengths of Kubota's top competitors, the appeal of vertical versus radial lift, and ideal lift height. *Id.*

207. These surveys showed that consumers strongly preferred vertical lift over radial lift, often labeling vertical lift as a requirement. This is evidenced by several survey responses. *See*, e.g., Ex. 2027 at 24, 31, 37, 38, 40, 42, 44, 53, 54, 59, 62, 64, 66, 68, 71, 77, 79, 103; *see also* Ex. 2028 at 1–2. For example, a landscaping customer stated that vertical lift was "much preferred over radial lift" and wanted the machine to be able to dump material in the 30-yard roll-off dumpster. Ex. 2027 at 31. A different company echoed this sentiment, advising Kubota to "[d]efinitely design a <u>vertical lift that can dump over a roll-off dumpster</u>." Ex. 2027 at 53 (emphasis in original). In addition, a contractor said "[v]ertical lift would be better, also needs more lift height & reach." Ex. 2027 at 44. A distributor expressed a desire for "vertical lift loader arms because they want as much reach at the top of the lift path as possible." Ex. 2027 at 62. One business owner even mentioned that he would pay more for the machine to have vertical lift. Ex. 2027 at 79.

208. Second, consumers greatly prioritized lift capacity over other features. *See*, *e.g.*, Ex. 2027 at 39, 53–55, 70, 77, 79. For example, one respondent emphasized that "[l]ift capacity is more important than power [or] lift height." Ex. 2027 at 53. A different company said that "[l]ift capacity and lift height are absolutely the top two specs." Ex. 2027 at 54.

209. Third, consumers frequently recognized Vermeer as a competitor in the industry. *See*, *e.g.*, Ex. 2027 at 24, 34, 64, 68, 74, 103, 105. One dealership said that "[t]he Vermeer has power and performance, everyone wants power [and] performance." Ex. 2027 at 74.

210. Kubota admits that it heavily relied on the results of its industry surveys to develop its first compact utility loader, the SCL1000. For example, when debuting the SCL1000 at a 2020 trade show, Kubota explained that it decided to launch a vertical-lift compact utility loader after it "did several surveys, took the machine out as a prototype, got feedback, [and] made changes" based on that feedback. Ex. 2029 at 6; Ex. 2030 at 2–4, 15, 27–30; Ex. 2031 at 6, 15, 35; Ex. 2032 at 2; Ex. 2028 at 1 ("The SCL1000…specifically fill[s] the requests from contractors in the marketplace.").

2. Kubota's Competitor Research

211. As part of its efforts to design its first-ever compact utility loader, Kubota's internal documents show that it began collecting information on the

compact utility machine market. Ex. 2027 at 1, 5, 12, 14–22; *see also* Ex. 2030 at 2–4, 15 and Ex. 2031 at 35. This research focused on "the most competitive features" of popular machines sold by its competitors: Vermeer, Toro, Ditch Witch, and Bobcat. Ex. 2027 at 1, 5, 12, 14–22, 110.

212. By 2017, Kubota had set out to enter Vermeer's consumer space in the compact utility loader market:

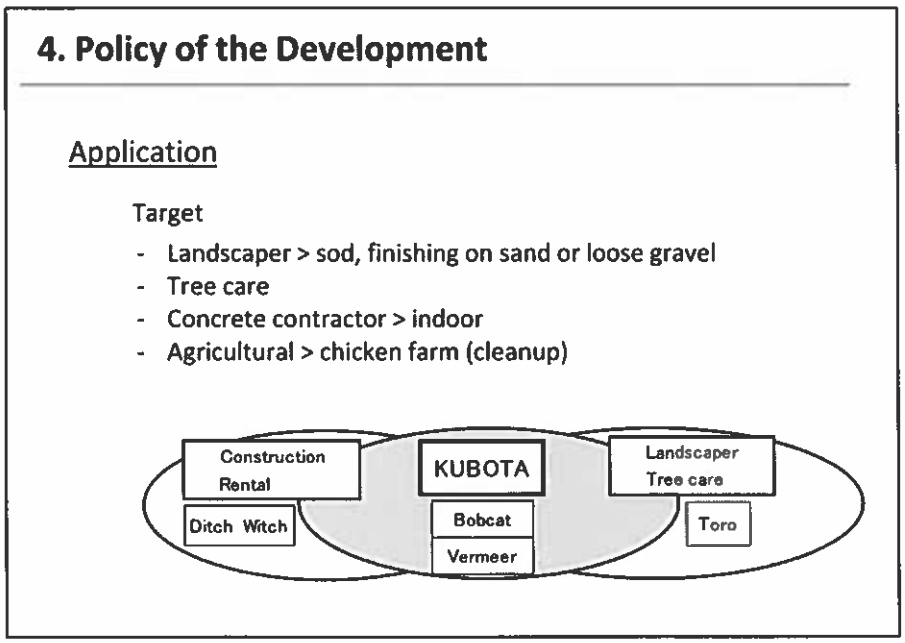

Ex. 2027 at 6.

213. Kubota further analyzed the "selling points" of Vermeer's CTX50 and CTX100, which practice the '386 Patent:

5. Comparison of Specifications

Selling Point

			Kubota CUL target value	Bobcat MT85	Toro TX1000	Ditch Witch SK1050	Vermeer CTX100
	Engine	hp (kW)	24.9 (18.5)	24.9 (18.5)	24.9 (18.5)	35.9 (27.5)	40.0 (29.8)
	Operating Weight	lbs (kg)	3100 (1406)	3100 (1406)	3100 (1406)	3555 (1655)	3800 (1724)
Productivity	Rated Operating Capacity (35%)	lbs	1000	850	1000	1052	1035
	Hinge Pin Height at max lift	in (mm)	88 (2235)	80.9 (2055)	81 (2057)	83 (2108)	88 (2235)
	Reach at max lift and dump	in (mm)	27.5 (700)	18.6 (472)	24.5 (622)	17 (430)	22.9 (581)
	Lift Arm Path		Vertical	Radial	Vertical	Radial	Vertical
Travel Performance	Travel Speed forward/reverse	m/h (km/h)	4.7/4.7 (7.6/7.5)	4.0/2.9 (6.4/4.7)	4.7/4.7 (7.6/7.6)	4.7/4.7 (7.6/7.6)	4.4/3.0 (7.1/4.8)
	Vehicle Width narrow/wide	in	-/36	36.8/41.1	33.7/41	-/42	36/40
	Track Width narrow/wide	in	-/9.8	7.1/9.8	5.9/9.5	-/9	7/9
	Ground Pressure narrow/wide	psi	-/3.5	4.8/3.5	5.4/3.5	-/4.9	5.3/4.2
	Track-tensioning system		Grease Cylinder	Bolt	Bolt	Grease Cylinder	Bolt
Maneuverability	Track Drive Control		Two Lever T Bar	Mecha ISO Joystick	Two Lever T Bar	2 Lever (opt. 1 Lever)	Hyd. Pilot Joystick
	Loader Control		Hyd. Pilot ISO Joystick	Hyd. Pilot ISO Joystick	Hyd. Pilot ISO Joystick	Single Lever	Hyd. Pilot ISO Joystick
Attachment	Attachment Interface		Common Industry Interface & Skid Steer style	Common Industry Interface & Skid Steer style	Common Industry Interface	Common Industry Interface	Common Industry Interface

Ex. 2027 at 12 (shading added); *see also* Ex. 2027 at 15, 20.

214. In fact, Kubota specifically researched the pin geometry, lift performance, pin reactions, etc. of Vermeer's products:

Vermeer CTX100 Pin Geometry

Measured Pin Locations with ROMER Arm

Bucket Pin Path Through Lift Cylinder Stroke (Shown in Grey)

Ex. 2027 at 86.

Vermeer Lift Performance

Pin Height	Lift Force
6.9051	4145.33
10	4237.82
15	4404.41
20	4600.01
25	4828.13
30	5096.88
35	5404.69
40	5750.36
45	6128.003
50	6527.3
55	6935.33
60	7319.92
65	7648.04
70	7872.68
75	7928.12
80	7711.34
85	7060.35

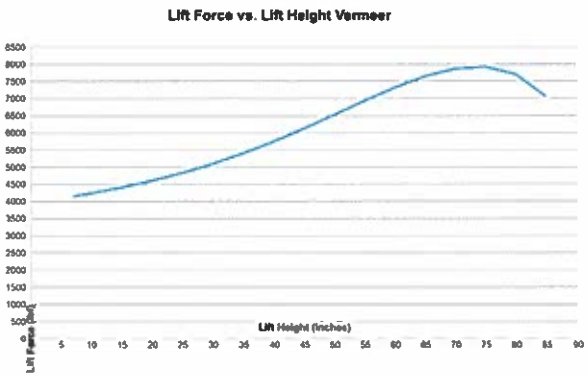

Lift Cylinder Force set to 2.5" Diameter Cylinder at 3045 psi or 29894 lbs

Ex. 2027 at 87.

Vermeer Pin Reactions

Pin Height	Front Link	Rear Link	Lift Cylinder
6.91	3598.73	5296.99	7211.48
10.00	3513.98	5349.00	7054.10
15.02	3389.42	5391.35	6787.28
20.04	3268.64	5380.06	6498.67
25.01	3144.95	5317.13	6191.61
30.02	3013.75	5205.74	5865.15
35.02	2869.10	5053.71	5531.12
40.02	2717.24	4869.96	5198.63
45.02	2558.18	4665.26	4878.26
50.02	2394.46	4450.94	4579.84
55.06	2227.38	4236.94	4310.39
60.06	2062.50	4039.55	4083.92
65.05	1901.08	3871.27	3908.72
70.01	1743.59	3748.13	3797.18
75.02	1586.06	3693.35	3770.63
80.01	1424.03	3754.06	3876.63
85.01	1238.60	4040.70	4234.07
88.91	1042.55	4635.91	4922.77

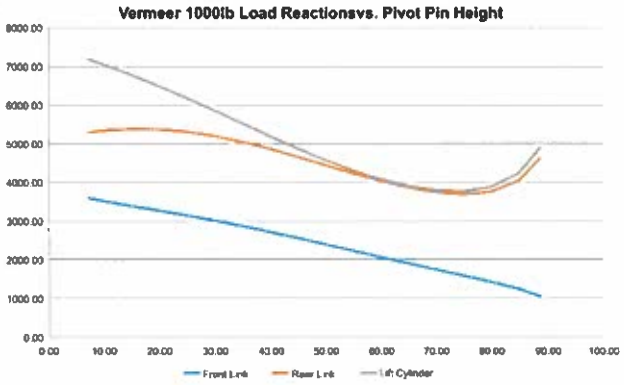

Ex. 2027 at 89.

215. Kubota concluded that vertical lift was a "selling point" for compact utility carriers. Ex. 2027 at 12–13. The combination of vertical lift and maximum lift height was particularly desirable to Kubota:

Main Selling Points

- **D902 Kubota engine with turbo**
- **Narrow unit with wide tracks**
- **Display with color graphics**
- Vertical lift
- Maximum lift height
- Productivity
  - **High travel speed**
  - Fast loader cycle time

*Bold items are unique to Kubota CUL

Ex. 2027 at 48; *see also* Ex. 2027 at 50.

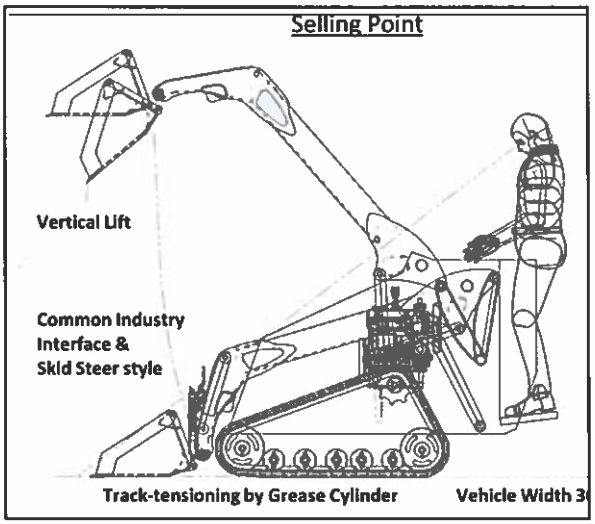

Ex. 2027 at 13.

3. Kubota's Proposed Specifications for its Compact Utility Loader

216. Kubota's mockup specifications for its own compact tool carrier identified vertical lift as a key component of the machine. Ex. 2027 at 50–52, 114.

Kubota vs. Competition Idea

	Kubota "Mini Bull"	Toro TX1000 Wide Track	DW SK1050	Bobcat MT85	Vermeer CTX100	Genesis Pwr Sys. 950001
Operating Weight	3,200 lbs	2,790lbs	3,435lbs*	3,110lbs	3,400lbs*	3,250lbs*
Engine HP	24.9HP	24.9HP	37HP	24.8HP	40HP	24.0 HP
ROC 35%	1,000 lbs	1,075 lbs	1,062 lbs	850 lbs	1,035 lbs	1,120 lbs
Tipping Load	2,857 lbs	3,071 lbs	3,035 lbs	2,458 lbs	2,958 lbs	3,200 lbs
Loader Type	vertical	vertical	radial	radial	vertical	Vertical
Hinge Pin Height	84.7"	81"	83"	80.9"	88"	81.5"
Track Tension Type	Grease	Bolt	Grease	Bolt	Bolt	N/A
Track Width Options	9.8"	5.9"/ 9.5"	7"/ 9"	7.1"/9.8"	7"/ 9"	9"
Overall Width	35.8"	33.7"/41"	42"	35.7"/41.1"	36"/40"	41.75"
Travel Speed (F/R)	4.9/ 4.9	4.7/4.7	4.7/4.7	4.0/2.9	4.4/3.0	4.7
Track Drive Control	1lever T bar Hyd. Pilot	2 lever T bar Hyd. pilot	2 lever or ISO Hyd. Pilot	ISO Joystick Mechanical	Single joystick Hyd. Pilot	ISO Joystick
Loader Control Type	ISO Joystick Hyd. Pilot	ISO Joystick Mechanical	ISO Joystick Mechanical	ISO Joystick Mechanical	ISO Joystick Mechanical	ISO Joystick
Hydraulic Oil Flow	15.5gpm	15.2 gpm	13.9 gpm	12.0 gpm	8.1/15.5 gpm	14.3 gpm

* No Attachment

Ex. 2027 at 52 (annotations added).

217. Based on my review of the prosecution history evidentiary record, the documents produced by Kubota, and the other information I have identified, it is my opinion that the secondary indicia of non-obviousness factors further confirm my conclusion that the invention claimed in the '386 Patent would not have been obvious to a POSITA based on the prior art identified by Kubota.

XIV. CONCLUSION

218. As explained above, it is my opinion that the Challenged Claims describe a compact utility loader with features that would not have been obvious to

one of ordinary skill in the art at the time of the effective filing date in 2015 in light of the prior art and arguments presented by Kubota and Dr. Velinsky.

219. I reserve the right to supplement my opinions in the future to respond to any arguments that Kubota may raise and to take into account new information as it becomes available to me.

220. I hereby declare that all statements made herein of my own knowledge are true, and that all statements made on information and belief are believed to be true, and that these statements were made with the knowledge that willful false statements and the like so made are punishable by fine or imprisonment, or both, under Section 1001 of Title 18 of the United States Code.

221. In signing this Declaration, I understand that the Declaration will be filed as evidence in a contested case before the Patent Trial and Appeal Board of the United States Patent and Trademark Office. I acknowledge that I may be subject to cross examination in the case and that cross examination will take place within the United States. If cross examination is required of me, I will appear for cross examination within the United States during the time allotted for cross examination.

I declare under penalty of perjury that the foregoing is true and correct.

Executed on September 3, 2025.

Mark Fleming

Mark Fleming, Ph.D., P.E.

APPENDIX A

Mark Fleming, Ph.D., P.E.
Chief Technical Officer
Direct: (331) 229-3328; Cell: (630) 947-2238
MFleming@fusioneng.com

Dr. Mark Fleming, Chief Technical Officer for Fusion Engineering, LLC, is an experienced mechanical engineer specializing in engineering analysis and accident investigation for vehicles and other machines. He is a consultant for accident investigation and reconstruction, failure analysis, design review and evaluation of products, and machinery and product testing. Dr. Fleming has a Ph.D. in theoretical and applied mechanics studying fracture mechanics and computer simulation methods, a M.S. degree in theoretical and applied mechanics studying reliability and fracture mechanics, and a B.S. degree in mechanical engineering. Dr. Fleming is also an Adjunct Professor of Mechanical Engineering at Northwestern University, where he teaches finite element analysis. He is a licensed professional engineer in the state of Illinois and a member of the American Society of Mechanical Engineers (ASME) and Society of Automotive Engineers (SAE).

Profile

- **Stress Analysis:** Applies finite element analysis to compute stress, strain and deformation of mechanical structures.
- **Fracture Mechanics and Fatigue Analysis**: Analyzes effects of pre-existing flaws and cracks in a structure.
- **Vehicle Engineering and Fuel System Crashworthiness:** Conducts analysis of vehicles under service loads and crash loads. Analyzes the effects of vehicle structure, material selection, and crash energy effects on fuel system integrity.
- **Bolted and Welded Joint Design and Analysis:** Provides understanding of how bolts and welds perform in service and analyzes fracture of these components.

Education

Academic Degrees

- **Ph.D. in Theoretical and Applied Mechanics**, Northwestern University, Evanston, IL, 1997
- **M.S. in Theoretical and Applied Mechanics**, Northwestern University, Evanston, IL, 1994
- **B.S. in Mechanical Engineering,** University of Nebraska, Lincoln, Nebraska, 1992

Expertise — Computer Specialization

- Finite element software: ABAQUS/Standard and Explicit, Optistruct, Hypermesh, LS-Dyna
- CAD software: Pro/Engineer, AutoCAD, Solidworks
- Programming Language: Matlab, Python
- Accident reconstruction software: EDCrash, EDSMAC, Simon

Expertise — Equipment and Applications

Accident Investigation and Reconstruction	Fuel System Integrity
Agricultural Equipment	Off-highway equipment
Automotive Engineering	Machinery and Product Testing
Bolt Analysis	Product Design Review and Evaluation
Construction Equipment	Stress Analysis
Crashworthiness	Theoretical and Applied Mechanics
Fatigue and Fracture Mechanics	Vehicle Engineering
Finite Element Analysis	Weld Analysis

Experience

Engineering Analysis, Simulation and Testing/Machinery and Vehicles

- Performed accident investigation and reconstruction.
- Inspected and analyzed more than 100 vehicles involved in crashes.
- Conducted design analysis and reviews of products.
- Specialized in the analysis of rollover protective structures (ROPS) and topology optimization.
- Coordinated analysis activities for three product lines, including planning, budgeting, and holding analysis reviews.
- Developed and deployed advanced simulation technologies for the optimization of agricultural and construction machinery.
- Performed testing and finite element simulations in the analysis of design performance.
- Conducted machinery and product testing.
- Was responsible for a corporate-wide analysis team for manufacturing simulations ranging from manufacturing process simulations to factory layout and factory flow simulations.
- Worked with 20 factories worldwide providing analysis and solutions related to the manufacture of agricultural and construction equipment products.

Studies — Professional Development

Technical:

- Reliability assessment for welded structures, 1999
- Probabilistic Analysis and Design: Computational Methods and Applications, 1999
- Operations research, 2000
- Logistics, 2000
- Fatigue design analysis with MSC.Fatigue, 2000
- Fatigue data analysis using nCode, 2003
- Vehicle Accident Reconstruction Methods, 2005
- HVE Introductory Training, 2005
- Fundamentals and Automotive Fuel Delivery Systems, 2007
- Vehicle Dynamics for Passenger Cars and Light Trucks, 2009
- Advanced Vehicle Dynamics for Passenger Cars and Light Trucks, 2011

Licenses — Professional Registration

- Licensed Professional Engineer in Illinois (License No. 62057502)

Employment — Roles and Responsibilities

Fusion Engineering, Naperville, IL **2014 to Present**
Principal Engineer

Consult on a broad range of products, equipment and structures in the areas of failure analysis, accident investigation and reconstruction, design review and evaluation, and machinery and product testing.

Northwestern University, Evanston, IL **2013 to Present**
Adjunct Professor of Mechanical Engineering

Teach Finite Element Analysis to graduate students.
Core faculty member in the Simulation Driven Engineering (SDE) program.
Research in manufacturing methods and multiscale methods for fatigue, fracture, and damage

ITC Experts, Inc., Sugar Grove, IL **2011 to 2014**
Senior Director of Mechanical Engineering

Manage projects in a broad range of products, equipment and structures for ITC Experts, Inc., a for-profit subsidiary of the Institute of Tribology and Coatings, Inc., which is an advanced Research and Development organization providing technical solutions to the military and industry.

Responsible for consultation in the areas of failure analysis, accident investigation and reconstruction, design review and evaluation, and machinery and product testing.

Packer Engineering, Naperville, IL **2003-2011**
Senior Director, Mechanical Engineering

Performed accident investigation and reconstruction, product design review and evaluation, and machinery and product testing. Utilized finite element analysis for mechanical design evaluation and vehicle crashworthiness analysis.

CNH Global/Case Corporation, Burr Ridge, IL **1997-2003**
Principal Engineer

Advanced Engineering Analysis - 2001-2003

Developed and deployed advanced simulation technologies for the optimization of agricultural and construction machinery. Specialized in vehicle dynamic shake simulations, particle flow methods, and optimization methods. Wrote methodology and "best practices" documents, taught analysis seminars, and coordinated software acquisition and usage.

Manager, Manufacturing Simulations - 2000-2001

Responsible for a corporate-wide analysis team for manufacturing simulations ranging from manufacturing process simulations to factory layout and factory flow simulations. Worked with 20 factories worldwide providing analysis and solutions related to the manufacture of agricultural and construction equipment products.

Engineering Analysis - 1997-2000

Specialized in analysis of rollover protective structures (ROPS) and topology optimization. Introduced a new technology to the design teams such as topology optimization, manufacturing process simulation, and reliability-based design analysis. Coordinated analysis activity for three product lines, including planning, budgeting, and holding analysis reviews.

Affiliations Memberships

American Society of Mechanical Engineers (ASME)
Society of Automotive Engineers (SAE)
SAE Fire Safety Committee member
ASM International
United States Association for Computational Mechanics
Pi Tau Sigma, Tau Beta Pi (engineering honor societies)
Northwestern University Mechanical Engineering Advisory Board member

Publications:

1. "Fatigue Reliability Method with In-Service Inspections, M.S. Thesis (1994).
2. Belytschko T., Krongauz, Y., Fleming, J., Organ, D.J., and Liu, W.K., "Smoothing and Accelerated Computations in the Element-Free Galerkin Method," Journal of Computational and Applied Mathematics, 74:111-126 (1996).
3. Belytschko, T., Krongauz, Y., Organ, D., Fleming, M., and Krysl, P., "Meshless Methods: An Overview and Recent Developments," Computer Methods in Applied Mechanics and Engineering, 139:3-47 (1996).
4. Organ, D., Fleming, M., Terry, T., and Belytschko, T., "Continuous Meshless Approximations for Nonconvex Bodies by Diffraction and Transparency," Computational Mechanics, Volume 18, Number 3, 225-235 (1996).
5. "Meshless Methods of Fatigue Crack Propagation," PhD Thesis (1997)
6. Fleming, M., Chu, Y., Moran, B., and Belytschko, T., "Enriched Element-Free Galerkin Methods for Crack Tip Fields," International Journal for Numerical Methods in Engineering, 40:1483-1504 (1997).
7. Belytschko, T. and Fleming, M., "Smoothing, Enrichment and Contact in the Element-Free Galerkin Method," Computers and Structures, 71(2):173-195 (1999).
8. Roy, S. and Fleming, M., "Non-Linear Subgrid Embedded Element-Free Galerkin Method for Monotone CFD Solutions," Proceedings of the 3rd ASME/JSME FED Conference (1999).
9. Yi, T. and Fleming, M., "Dynamic Simulations for Self-Propelled Sprayer With a Large Flexible Boom," LMS Conference for Physical and Virtual Prototyping (2002).
10. Olson, J., Fleming, M., Krishnaswami, R. and Pellillo, R., "Fuel Filler System Check Valves – Dynamic Evaluation," SAE Technical Paper 2017-01-1350.
11. Liu, Z., Fleming, M., and Liu, W.K., "Microstructural Material Database for Self-consistent Clustering Analysis of Elastoplastic Strain Softening Materials," Computer Methods in Applied Mechanics and Engineering, 330:547-577 (2018).
12. Zhang, G., Guo, T., Guo, X., Tang, S., Fleming, M., and Liu, W.K., "Fracture in Tension-Compression-Asymmetry Solids via Phase Field Modeling," Computer Methods in Applied Mechanics and Engineering, 357 (2019).
13. Han, X., Gao, J., Fleming, M., Xu, C., Xie, W., Meng, S., Liu, W.K., "Efficient multiscale modeling for woven composites based on self-consistent clustering analysis," Computer Methods in Applied Mechanics and Engineering, 364 (2020).
14. Fleming, M., Krishnaswami, R., and Nakamoto, K., "Fuel Tank Strain Measurement using Computer Vision Analysis," SAE Technical Paper 2020-01-0924.

15. Tang, S., Yang, H., Qui, H., Fleming, M., Liu, W.K., Xu, G., "MAP123-EPF: A mechanistic-based data-driven approach for numerical elastoplastic modeling at finite strain," Computer Methods in Applied Mechanics and Engineering, 373 (2021).

16. Liu, W.K., Z. Gan, M. Fleming, *Mechanistic Data Science for STEM Education and Applications*, Springer, January 2022.

17. Huang, H., Mojumder, S., Suarez, D., Al Amin, A., Fleming, M., Liu, W.K., "Knowledge database creation for design of polymer matrix composite," Computational Materials Science, accepted for publication (2022).

Presentations:

1. "Design and Analysis for Optimizing Manufacturing Processes," Design Engineering Conference at National Manufacturing Week (March 18-21, 2002).

2. "Manufacturing Simulations," Northwestern University (October 2000).

3. "Elemento Finitos Sin Malla," Universidad Politecnica de Madrid, Madrid, Spain (December 1996).

4. "The Element-Free Galerkin Method for Fatigue Crack Propagation," University of Nebraska, Lincoln, Nebraska (April 1996).

5. "There is a Substitute – Engineering Perspective on the Use of Computer Simulations," ACMIE SLG Workshop, DRI, Las Vegas, NV (February 2006).

6. "The Good, the Bad, and the Ugly – Computer Simulations for Product Development, Failure Analysis, and Mischief," ASM Material Science and Technology 2006 Conference and Exhibition, Cincinnati, OH (October 2006).

7. "Finite Element Analysis in Products Litigation: What you See is Nice, What's Covered is Vital," E.M. Caulfield, M. Fleming, and K. Schiferl, ABA 2008 Emerging Issues in Motor Vehicle Product Liability Litigation, Phoenix, AZ (April 2008).

8. "A New Approach to an Old Topic – Using Finite Element Analysis to Analyze Spot Weld Claims in Crashworthiness Cases," M. Fleming and A. Jones, ABA 2009 Emerging Issues in Vehicle Product Liability Litigation, Phoenix, AZ (April 2009).

9. "Science and Engineering: from Theory to Application", Arantzazu Alarcon-Fleming and Mark Fleming, North Central College Science Seminar, Naperville, IL (May 2011).

10. "Investigating Fires Involving Plastic Fuel Tanks: The Problem with Self-Consuming Evidence", P.W. Miles IV and M. Fleming, ABA 2013 Emerging Issues in Motor Vehicle Liability Litigation, Phoenix, AZ (April 2013).

11. "Fatigue Fracture Analysis using XFEM Combined with Fracture Surface Analysis", M. Fleming and K. Jones, Advances in Computational Mechanics with Emphasis on Fracture and Multiscale Phenoma *workshop honoring Professor Ted Belytschko's 70th Birthday*, Evanston, IL (April 2013).

12. "Computational Methods for Evaluating Variability in Optimization and Product Performance Evaluation", Key Note Presentation, M. Fleming, Symposium: Multidisciplinary Computer-Aided Design and Simulation-Based Optimization – Recent Applications and Future, Evanston, IL (December 2014).

13. "Investigation of an Automotive Spring Fatigue Fracture with Abaqus XFEM", ASM Material Science & Technology 2015 Conference, Columbus, OH (October 7, 2015).

14. "Elastic Cloud Based Make – A New Frontier for Manufacturing Optimization", M. Fleming, Symposium: Multidisciplinary Computer –Aided Design and Simulation-Based Optimization – Recent Applications and Future, Sponsored by Northwestern University and Altair Engineering, Evanston, IL (December 2016).

15. "Multiscale Analysis Methods for Failure Analysis: Industry and Research Perspective", M. Fleming, WCCM 2018 Short Course: Mechanistic Data-Driven Multiscale Analysis and Applications, New York City, NY (July 2018).

16. "Mechanistic Data Science and Computer Vision for Forensic Engineering", M. Fleming, T. Bundorf, K. Nakamoto, MMLDT-CSET, San Diego, CA (September 2021).

17. "Mechanistic Data Science (MDS) for STEM Education and Applications", short course presented at MMLDT-CSET, San Diego, CA (September 2021).

End of CV

Trial/Deposition Testimony
for
Mark A. Fleming

Project Name: Wheeler, George v Ford Motor Company
Case Number: 8:19-CV-02-132-DCC
Location: United States District Court, District of South Carolina, Anderson Division
Date: August 27, 2021
Deposition

Project Name: Thompson, Nancy and Weibin Lam v Joe-K Used Cars and GM
Case Number: 1922-CC10777-02
Location: Circuit Court of the City of St. Louis, State of Missouri
Date: November 17, 2021
Deposition

Project Name: Smage, Sarah v Zero Motorcycles and Feld Motor Sports
Case Number: 17cv6355
Location: United Stated District Court for the Northern District of Illinois
Date: January 14, 2022
Deposition

Project Name: Deere & Co. v Agco Corporation
Case Number: 18-827 (CFC)
Location: United Stated District Court for the District of Delaware
Date: February 16, 2022
Deposition

Project Name: Tyler, Angel v Ford Motor Company
Case Number: 18-C-182
Location: Circuit Court of Kanawha County, West Virginia
Date: May 12-13, 2022
Trial

Project Name: Tolle v AGL
Case Number: 19CV-181
Location: Superior Court of Clinch County, Georgia
Date: June 23, 2022
Deposition

Project Name: Deere & Co. v Agco Corporation
Case Number: 18-827 (CFC)
Location: United Stated District Court for the District of Delaware
Date: July 7, 2022
Trial

Project Name: Smage, Sarah v Zero Motorcycles and Feld Motor Sports
Case Number: 17cv6355
Location: United Stated District Court for the Northern District of Illinois
Date: July 21, 2022
Deposition

Project Name: Graham (Matilda) v Buchheit Trucking Service, Purcell Tire
Case Number: 20CL-CC00018
Location: Circuit Court of Caldwell County, Missouri
Date: August 30, 2022
Deposition

Project Name: Bustos/Salazar v Robert Jesus Lucero, et al
Case Number: D-412-CV-2016-00072
Location: County Court of San Miguel, New Mexico
Date: November 17, 2022
Deposition

Project Name: Hetsler v Ford Motor Company, Roush Performance, World Imports
Case Number: 16-2020-CA-002410
Location: Fourth Judicial Circuit, Duval County, Florida
Date: March 8, 2023
Deposition

Project Name: Cappo v Sage Parts, Inc., et al
Case Number: 2:21-CV-01928
Location: United States District Court for the Eastern District of Pennsylvania
Date: June 16, 2023
Deposition

Project Name: Parish v Ford Motor Company
Case Number: 03-CV-2019-900896
Location: Circuit Court for Montgomery County, Alabama
Date: August 25, 2023
Deposition

Project Name: Hetsler v Ford Motor Company
Case Number: 16-2020-CA-002410
Location: Fourth Judicial Circuit, Duval County, Florida
Date: February 15, 2024
Trial

Project Name: Alailefaleula v FCA
Case Number: A-22-854317-C
Location: Eight Judicial District Court, Clark County, Nevada
Date: April 25, 2024
Deposition

Project Name: Loyal v Ford
Case Number: 19 CVS 1486
Location: General Court of Justice, Superior Court Division, Orange County, North Carolina
Date: May 23, 2024
Deposition

Project Name: Brogdon Mills v Ford
Case Number: 4:23-cv-00088-CDL
Location: United States District Court, Middle District of Georgia, Columbus Division
Date: June 12, 2024
Deposition

Project Name: Precision Planting v Maschio Gaspardo
Case Number: IPR2024-00008
Location: United States Patent and Trademark Office Before the Patent Trial and Appeal Board
Date: June 27, 2024
Deposition

Project Name: Amber Hall-January v Ford Motor Company and Missouri Highways and Transportation Commission
Case Number: 23DG-CC00045
Location: Circuit Court of Douglas County, Missouri
Date: July 26, 2024
Deposition

Project Name: Marr v Ford
Case Number: CIV2103904
Location: Superior Court of the State of California for the County of Marin
Date: August 16, 2024
Deposition

Project Name: Yraguen v Ford
Case Number: 6:23-cv-01366AA
Location: United Stated District Court District of Oregon Eugene Division
Date: August 21, 2024
Deposition

Project Name: McNamara v Neal and FCA
Case Number: 23-2-13067-7 SEA
Location: Superior Court of the State of Washington for King County
Date: November 18, 2024
Deposition

Project Name: Maschio Gaspardo v Precision Planting
Case Number: 1:22-cv-01394-RGA-LDH
Location: United Stated District Court for the District of Delaware
Date: January 15, 2025
Deposition

Project Name: Lacy Bibelhauser v Ford Motor Company and Christopher Bibelhauser
Case Number: 20-CI-005047
Location: Commonwealth of Kentucky Jefferson Circuit Court
Date: January 24, 2025
Deposition

Project Name: Philbeck, Rodney v Ford Motor Company
Case Number: 2:23-cv-00339
Location: United Stated District Court for the Eastern District of Washington
Date: January 31, 2025
Deposition

Project Name:	Landers, Rick and Salinas Zarling v Ford Motor Company
Case Number:	2:23-cv-915-PA-PVC
Location:	United Stated District Court Central District of California
Date:	March 18, 2025
Deposition	

Project Name:	Van Tussenbrook, Justin v Yamaha Motor Corporation, et al.
Case Number:	30-2022-01273750-CU-PL-CJC
Location:	Superior Court of the State of California, County of Orange-Central
Date:	June 24, 2025
Deposition	

APPENDIX B

MATERIALS CONSIDERED

Exhibit	Description
1001	U.S. Patent No. 9,321,386 (the "'386 Patent")
1002	Prosecution History of U.S. Patent No. 9,321,386
1003	First Declaration of Steven Velinsky under 37 C.F.R. § 1.68
1004	Appendix A of Velinsky Declaration
1005	Korean Patent No. 10-1041996 including original Korean language document, certified English translation, and certification of translation ("KR996")
1006	JP2004017705A including original Japanese language document, certified English translation, and certification of translation ("JP705")
1007	U.S. Patent No. 6,397,967 ("McIlwraith")
1008	U.S. Patent No. 3,586,195 ("Beltrami")
1009	U.S. Patent No. 6,695,568 ("Bares '568")
1010	U.S. Patent No. 6,832,659 ("Bares")
1011	JPH 11140900 to Komatsu ("Komatsu") (machine translation)
1012	U.S. Patent No. 6,474,933 ("Hoechst")
1013	U.S. Patent Application Publication No. 2008/0197588 to Azure ("Azure")
1014	Korean Patent No. 10-1023528 including original Korean language document, certified translation, and certification
1015	SAE International J2752 JUN2010 ("SAE J2752"), Surface Vehicle Recommended Practice, Personal Protection — Compact Tool Carriers
1016	International Organization for Standardization (ISO) 6165 (2012)
1017	International Organization for Standardization (ISO) 3457 (2003)
1018	International Organization for Standardization (ISO) 3411 (2007)
1019	Complaint, 4:24-cv-00799-P
1020	Toro Claim Construction, 4-17-CV-00076 (terminated)
1021	U.S. Patent Application Publication No. 2007/0128012 Al ("Yamada")
1022	U.S. Patent No. 8,545,163 ("Yasuda")
1023	N. Sclater, et al., Mechanisms and Mechanical Devices Sourcebook, Fourth Edition, Table of Contents, Chapter 1, Chapter 5
1024	N. Nariman-Zadeh, et al., "Pareto optimal synthesis of four-bar mechanisms for path generation," 26 March 2008
1025	Four-Bar Coupler-Point Curves, Chapter 6

1026	H Nolle, Linkage Coupler Curve Synthesis: A Historical Review — II. Developments after 1875*, 7 July 1973
1027	Wen-Tzong Lee, et al., "Developments in quantitative dimensional synthesis (1970-present): four-bar path and function generation" 2017
1028	Theory of Machines and Mechanisms, Shigley, J.E. and Uicker, J.J. Jr., McGraw Hill, 1980, Table of Contents, Chapter 1
1029	Reexam 90013915 PH
1030	Reexam 90014109 PH
1031	Reexam 90014124 PH
1032	U.S. Patent Publication Appl. 2010/0168933 ("Rorabaugh")
1033	U.S. Patent Publication Appl. 2009/0116943
1034	United States District Court — National Judicial Caseload Profile
1035	U.S. Patent No. 3,828,873 ("Oestmann")
1036	CV of Steven Alan Velinsky
1037	Order Granting Motion to Stay, Case No. 4:24-cv-00799-P, March 19, 2025
1038	Report On The Filing Or Determination Of An Action Regarding A Patent or Trademark, Case 4:24-cv-00799-P, March 19, 2025
1039	Vermeer Manufacturing Company's Opening Claim Construction Brief, Case No. 4:19-cv-00050-CRW-HCA, August 23, 2019
1040	Vermeer Manufacturing Company's Rebuttal Claim Construction Brief, Case No. 4:19-cv-00050-CRW-HCA, September 13, 2019
1041	Websters Dictionary (select portions)
2001	February 28, 2025 Patent Office Announcement
2002	U.S. Patent No. 7,695,236 ("Green")
2003	U.S. Patent No. 8,821,104 ("Yasuda")
2004	U.S. Patent Pub. 2016/0244937A1
2005	U.S. Patent No. 5,542,814
2006	Summary: Problems with the Disclosure in KR996
2007	Excerpts from Oxford Dictionary
2008	Dingo Operators Manual
2009	Dingo Parts Catalog
2010	Scheduling Order from Parallel Litigation (ECF No. 34)
2011	Kubota's Amended Answer and Counterclaims from Parallel Litigation (ECF No. 39)
2012	Amended Scheduling Order from Parallel Litigation (ECF No. 41)
2013	Judge Pittman's Specific Requirements from Parallel Litigation
2014	Excerpt of Kubota's Invalidity Contentions from Parallel Litigation

2015	*RESERVED*
2016	Declaration of Mark Fleming
2017	U.S. Patent No. 5,004,398
2018	U.S. Patent No. 5,666,794
2019	U.S. Patent No. 8,160,785
2020	U.S. Patent No. 9,039,344
2021	August 19, 2025 Deposition Transcript of Steven Alan Velinsky
2022	Exhibit 2 to August 19, 2025 Deposition Transcript of Steven Alan Velinsky
2023	TX1000 Infringement Contentions
2024	CTX50 Claim Charts
2025	CTX100 Claim Charts
2026	"Innovative Iron Awards: Toro and Vermeer Compact Tool Carriers", Compact Equipment Magazine, December 22, 2015.
2027	Petitioner's Confidential Document Production
2028	"Kubota enters stand-on track-loader segment with new SCL1000", SAE, March 12, 2020.
2029	Transcript for "Kubota's New SCL 1000 Stand-on Skid Steer" Video, ForConstructionPros, March 11, 2020
2030	Transcript for "Kubota Gets into the Stand-on Track Loader Market" Podcast, ForConstructionPros, March 11, 2020
2031	Transcript for "Kubota Expert Breaks Down the SCL1000" Video, EquipmentWorld, September 30, 2020
2032	"Kubota unveils its first mini skid steer, the SCL1000", Equipment World, March 12, 2020 (updated March 14, 2020)
2033	*RESERVED*
2034	*RESERVED*
2035	*RESERVED*
2036	*RESERVED*
2037	Declaration of Richard L. Brophy
2038	Stipulated Protective Order