US007980569B2

(12) **United States Patent**
Azure et al.

(10) **Patent No.: US 7,980,569 B2**
(45) **Date of Patent: Jul. 19, 2011**

(54) **PLATFORM ASSEMBLY FOR USE WITH WORKING VEHICLE**

(75) Inventors: **John P. Azure**, Bloomington, MN (US); **Tanner L. Erickson**, St. Paul, MN (US); **Barry L. Hentges**, New Prague, MN (US); **David A. Murray**, Eagan, MN (US); **Greg L. Lawrence**, Bloomington, MN (US)

(73) Assignee: **The Toro Company**, Bloomington, MN (US)

(*) Notice: Subject to any disclaimer, the term of this patent is extended or adjusted under 35 U.S.C. 154(b) by 697 days.

(21) Appl. No.: **12/029,791**

(22) Filed: **Feb. 12, 2008**

(65) **Prior Publication Data**

US 2008/0197588 A1 Aug. 21, 2008

Related U.S. Application Data

(60) Provisional application No. 60/901,399, filed on Feb. 15, 2007.

(51) **Int. Cl.**
A01D 75/00 (2006.01)

(52) **U.S. Cl.** **280/32.5**; 280/32.7; 280/124.154; 172/433; 172/257; 172/329

(58) **Field of Classification Search** 280/32.5, 280/32.7, 124.145, 124.154; 172/433, 257, 172/329

See application file for complete search history.

(56) **References Cited**

U.S. PATENT DOCUMENTS

1,404,419	A	1/1922	Wright
1,948,802	A	2/1934	Schroeder
2,910,888	A	11/1959	Bergsten
3,485,314	A	12/1969	Herr
4,509,769	A	4/1985	Weber
4,584,735	A	4/1986	Garber
4,735,392	A	4/1988	Farmer
4,878,339	A	11/1989	Marier et al.
5,004,251	A	4/1991	Velke et al.
5,106,256	A	4/1992	Murakami et al.
5,117,944	A	6/1992	Hurtevent
5,575,140	A	11/1996	Bermes et al.
5,577,744	A	11/1996	Parks

(Continued)

FOREIGN PATENT DOCUMENTS

EP 0 485 257 A1 5/1992

(Continued)

OTHER PUBLICATIONS

U.S. Appl. No. 60/901,399, filed Feb. 15, 2007, Azure et al.

(Continued)

Primary Examiner — Hau V Phan

Assistant Examiner — John R Olszewski

(74) *Attorney, Agent, or Firm* — Mueting, Raasch & Gebhardt, P.A.

(57) **ABSTRACT**

Operator platform assemblies for use with the working vehicles, e.g., skid steer loaders, and vehicles incorporating the same. The platform assemblies may, in some embodiments, include an arm assembly that attaches to a rear portion of the vehicle and extends rearwardly therefrom as a cantilever member. The platform assembly may pivot from this deployed position to a storage position by pivoting upwardly about a pivot axis proximate the vehicle. A platform is, in some embodiments, pivotally attached to the arm assembly so that the platform may pivot relative to the arm assembly.

18 Claims, 12 Drawing Sheets

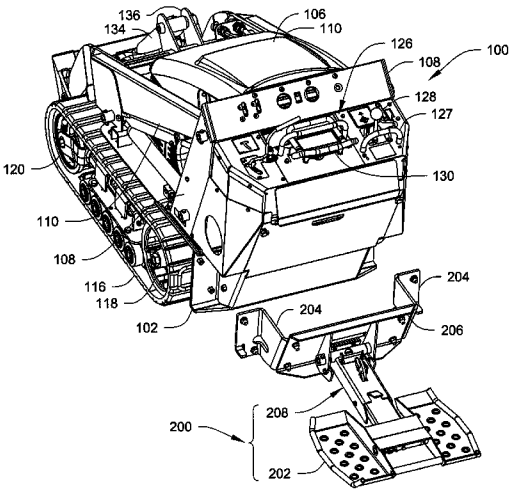

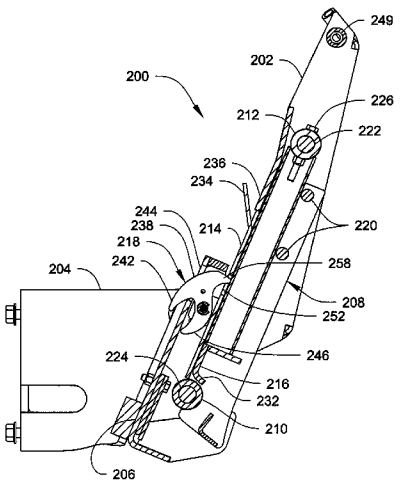

U.S. PATENT DOCUMENTS

5,653,466	A	8/1997	Berrios	
5,685,554	A	11/1997	Poxleitner	
5,697,623	A *	12/1997	Bermes et al.	280/32.7
5,809,756	A	9/1998	Scag et al.	
5,816,614	A	10/1998	Kramer, Jr. et al.	
5,909,887	A	6/1999	Hobrath	
6,151,811	A	11/2000	Barreto	
6,415,532	B1	7/2002	Bricko et al.	
6,443,252	B1	9/2002	Andes	
6,485,036	B1	11/2002	Bricko	
6,488,291	B1	12/2002	Bellis, Jr.	
6,709,223	B2	3/2004	Walto et al.	
6,935,092	B2	8/2005	Velke et al.	
7,004,272	B1	2/2006	Brown et al.	
7,063,341	B2	6/2006	Tsai	
7,114,736	B2 *	10/2006	Stodola et al.	280/164.1
7,300,061	B1	11/2007	Omstead	
7,458,588	B2 *	12/2008	Kallevig	280/32.7
7,624,996	B2 *	12/2009	Velke et al.	280/32.7
2004/0093840	A1	5/2004	Velke et al.	
2004/0145134	A1	7/2004	Bares	
2006/0103093	A1	5/2006	Kallevig	
2006/0290080	A1 *	12/2006	Vachal	280/32.7
2007/0200307	A1 *	8/2007	Bares	280/32.7
2009/0072504	A1	3/2009	Kallevig	

FOREIGN PATENT DOCUMENTS

EP	1 172 285 B1	1/2002
GB	1 346 032	2/1974

OTHER PUBLICATIONS

"Step-Up™ Operators Platform for Toro Dingo 420/425," Kaltec of Minnesota, Inc. [online]. Retrieved on May 12, 2008. Retrieved from the Internet:<URL:http://web.archive.org/web/20050816161810/www.forkster.com/products/stepup_dingo.asp>;2 pgs. Published Aug. 16, 2005.

"Kanga Multi-Task Compact Skid Steer Loaders 2 Series," Kanga Loaders [product sheet], Jan. 2006, 4 pgs.

* cited by examiner

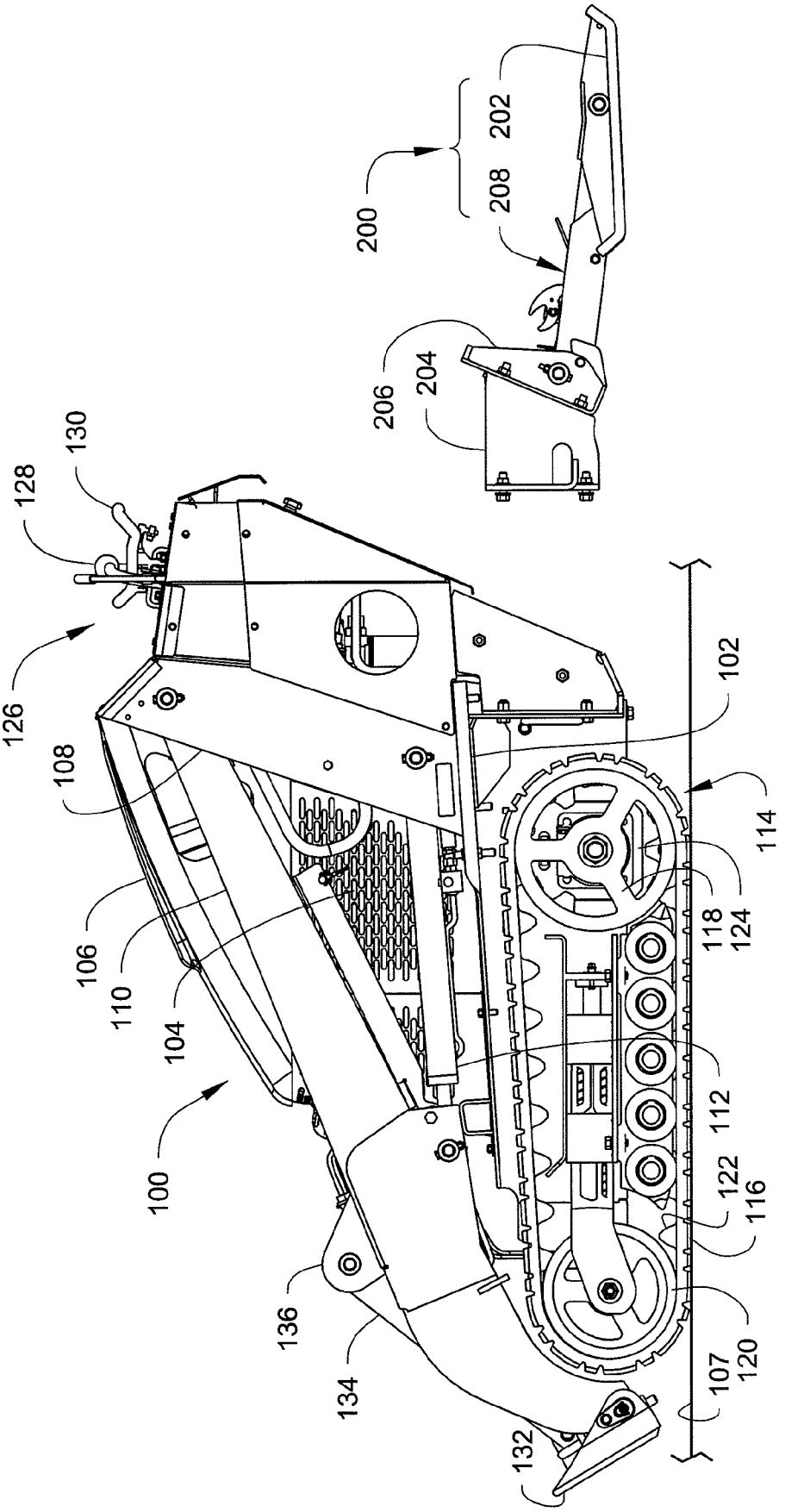
200
202
208
206
204
130
128
126
108
106
110
104
100
136
134
132
102
114
118
124
112
122
116
107
120

Fig. 1

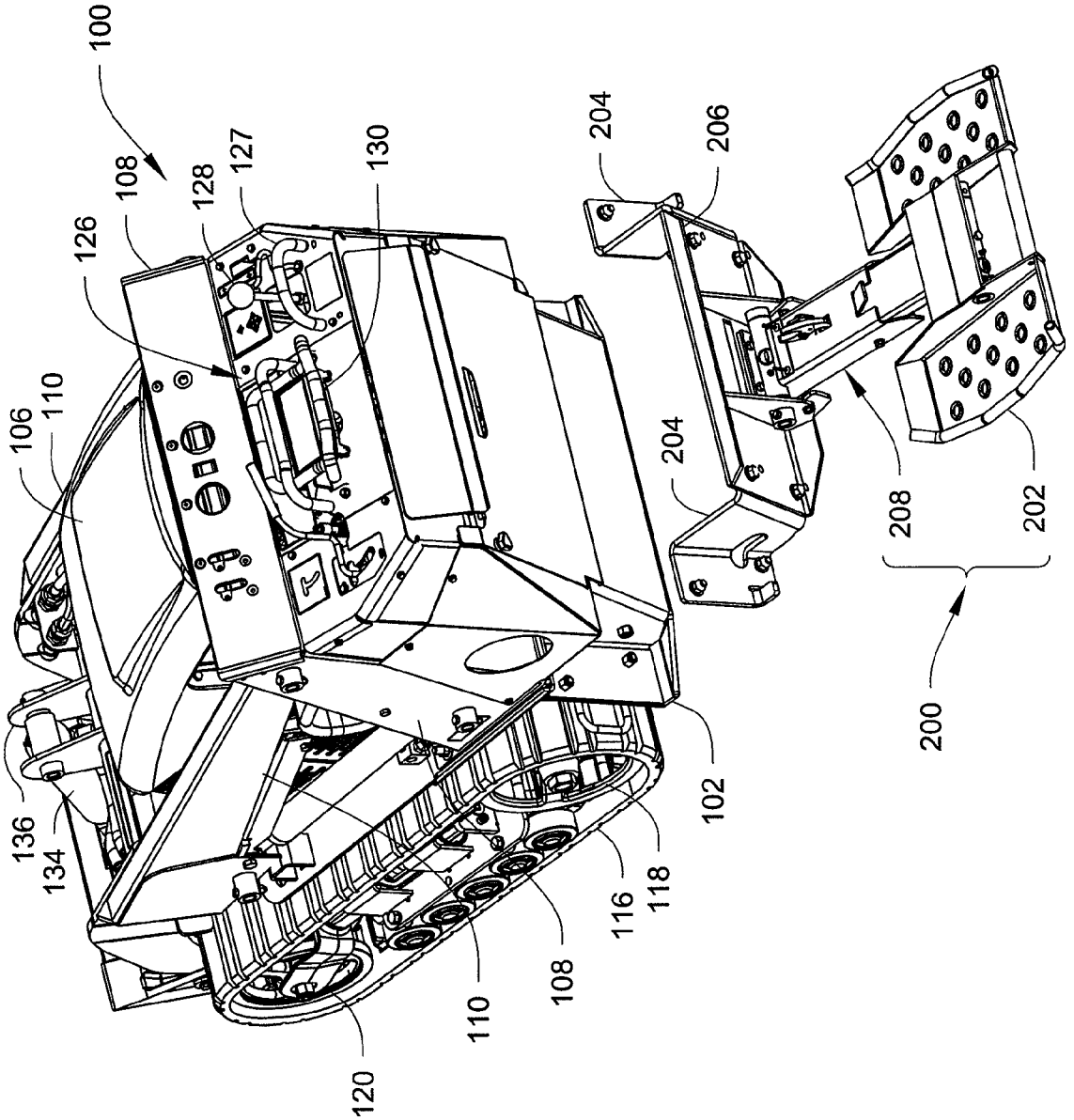
100
108
126
128
127
130
106
110
136
134
120
110
108
116
118
102
204
206
204
208
202
200

Fig. 2

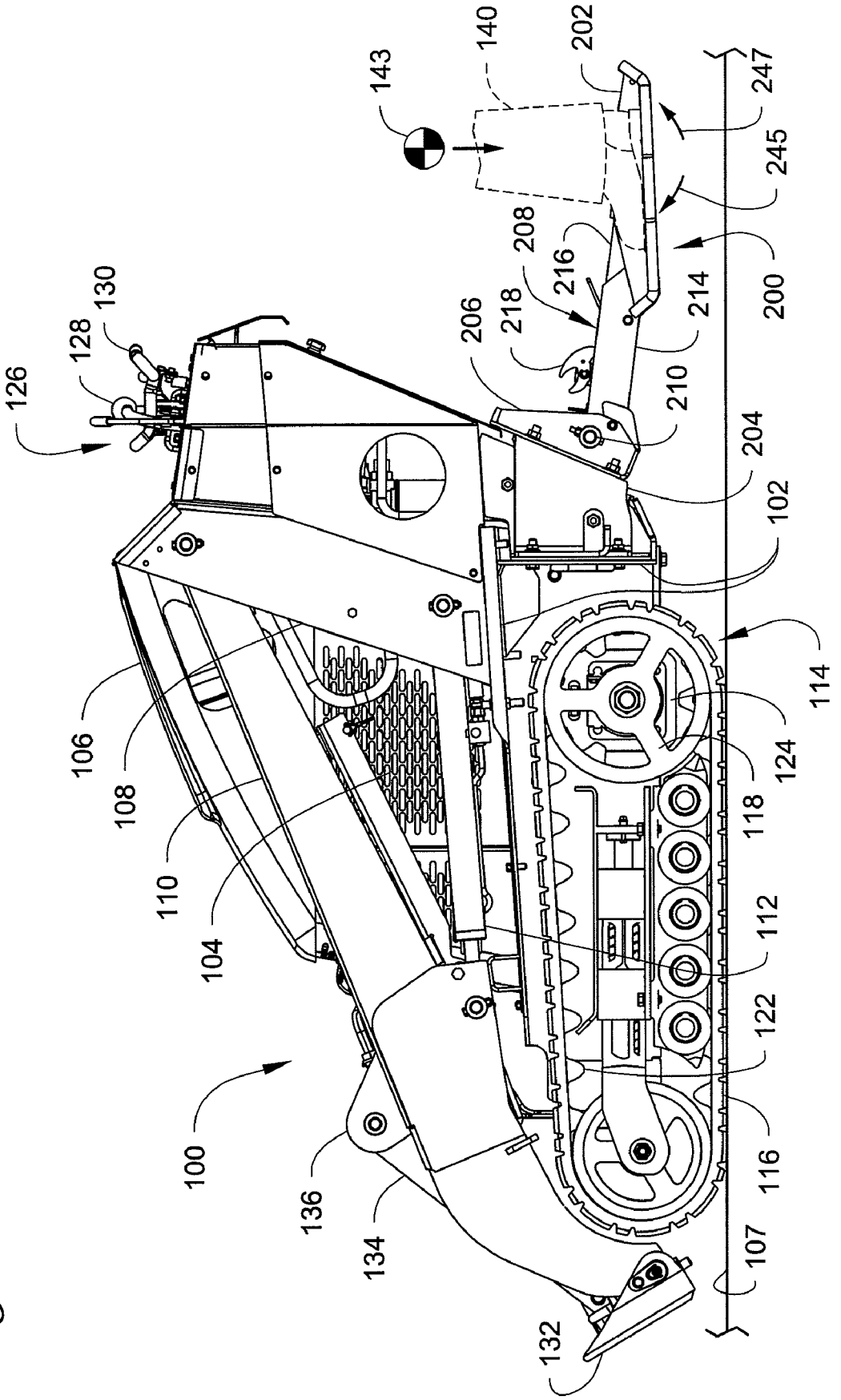
126
128
130
143
140
202
247
245
208
216
218
206
214
200
210
204
102
106
108
110
104
100
136
134
132
114
124
118
112
122
116
107

Fig. 3

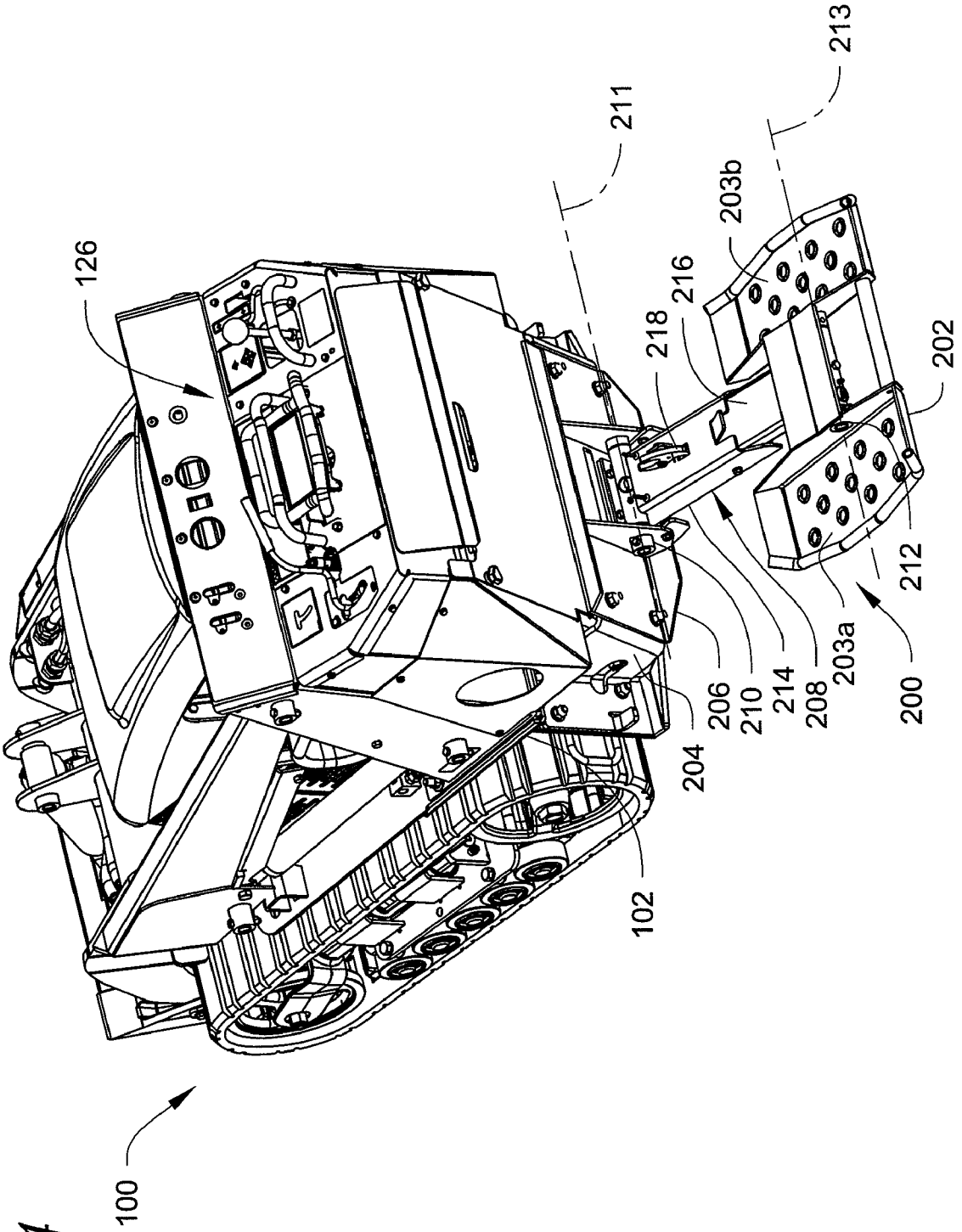
126
211
213
203b
216
218
202
212
203a
200
208
214
210
206
204
102
100

Fig. 4

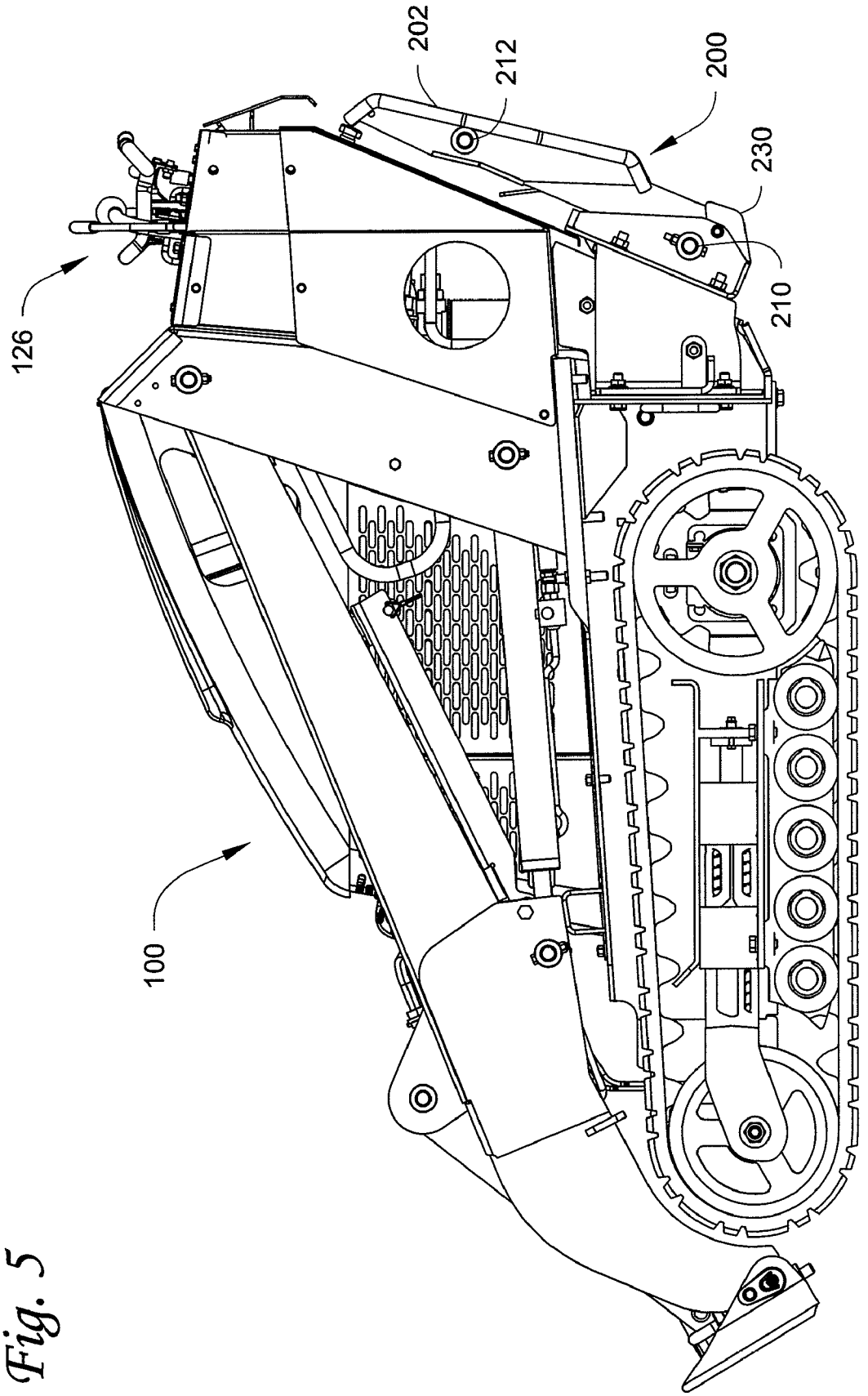

Fig. 5

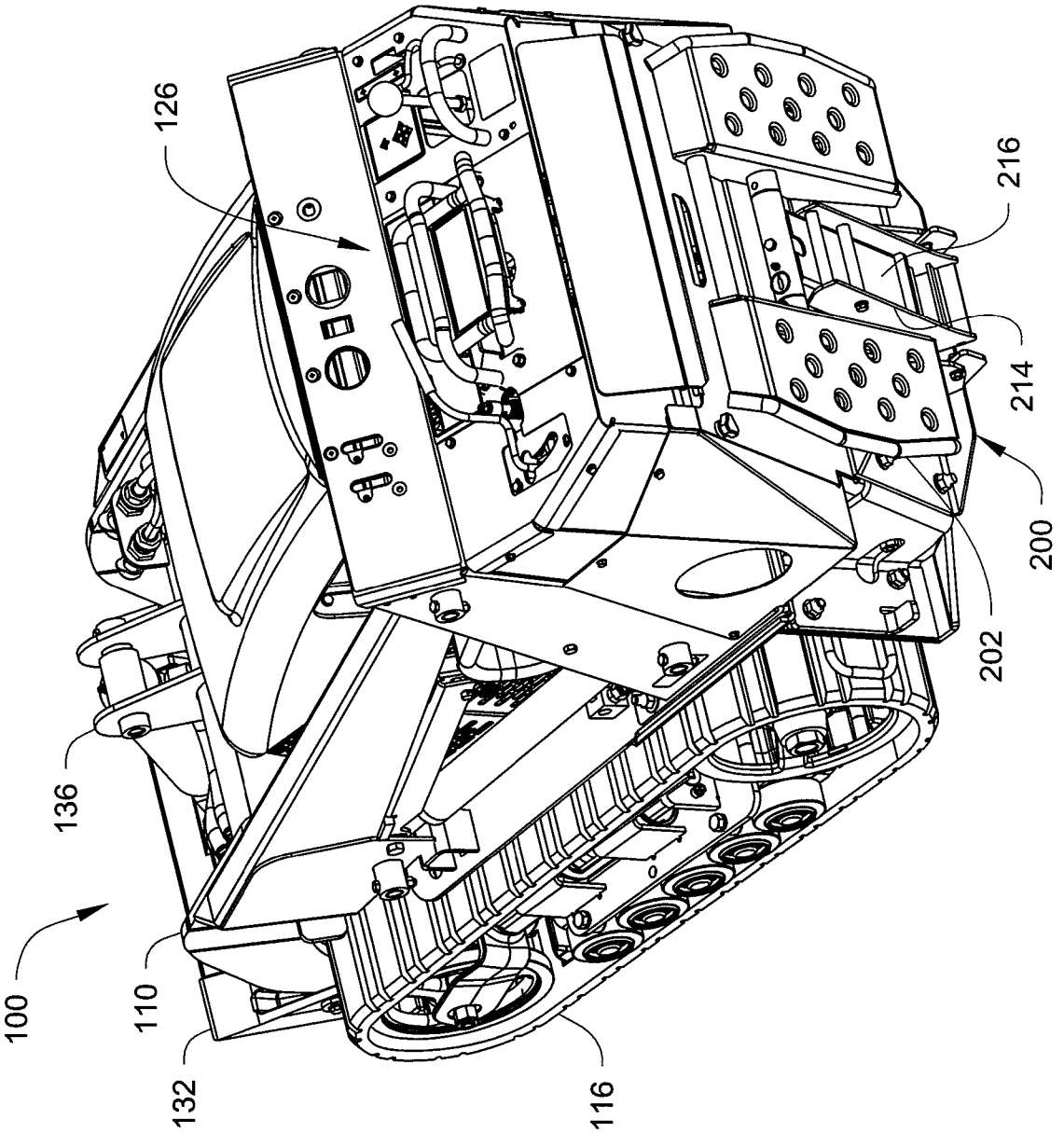

Fig. 6

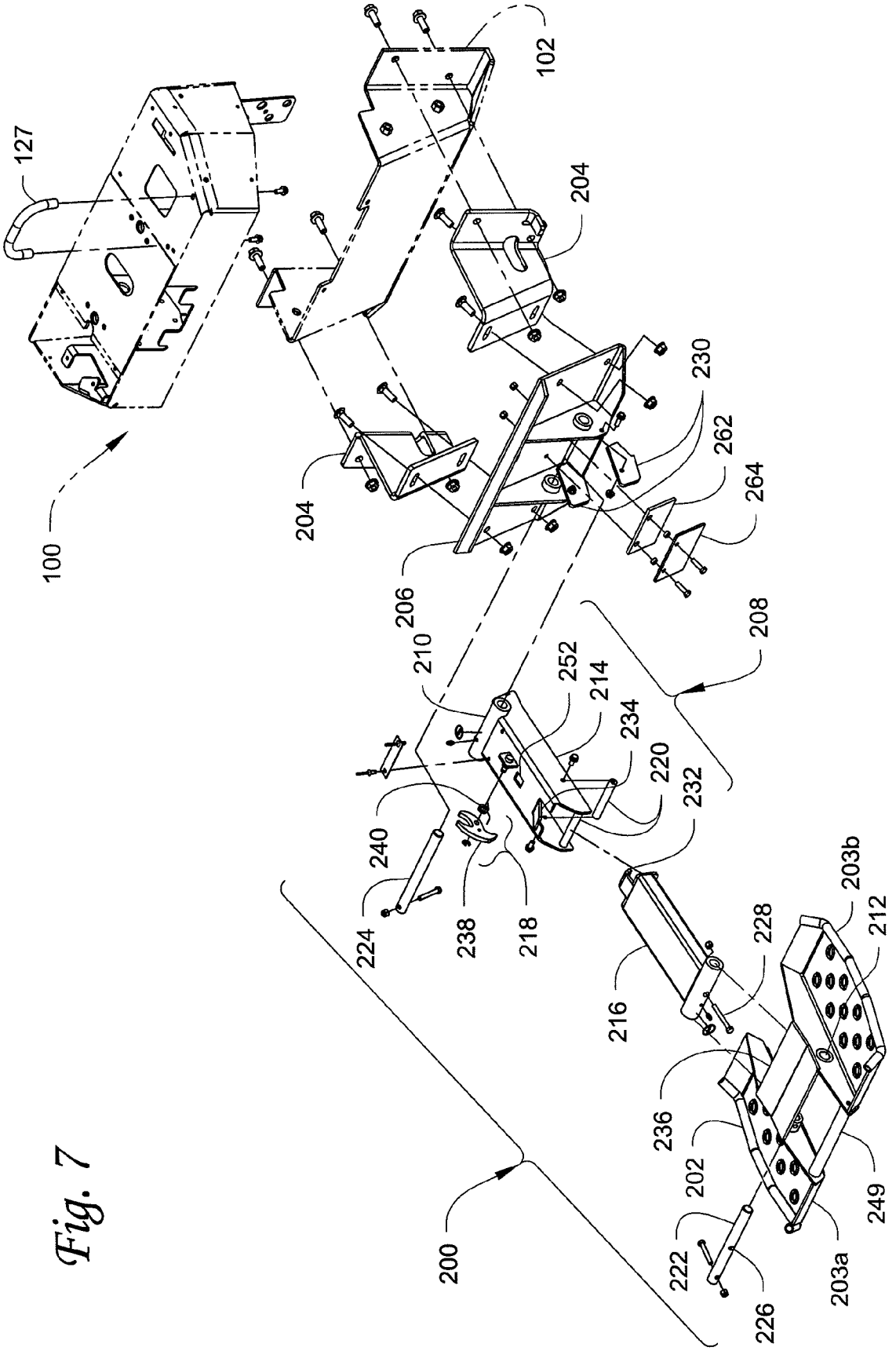
127
102
204
100
204
230
262
264
206
208
210
252
214
234
220
232
240
224
238
218
216
228
203b
212
236
202
249
222
226
203a
200

Fig. 7

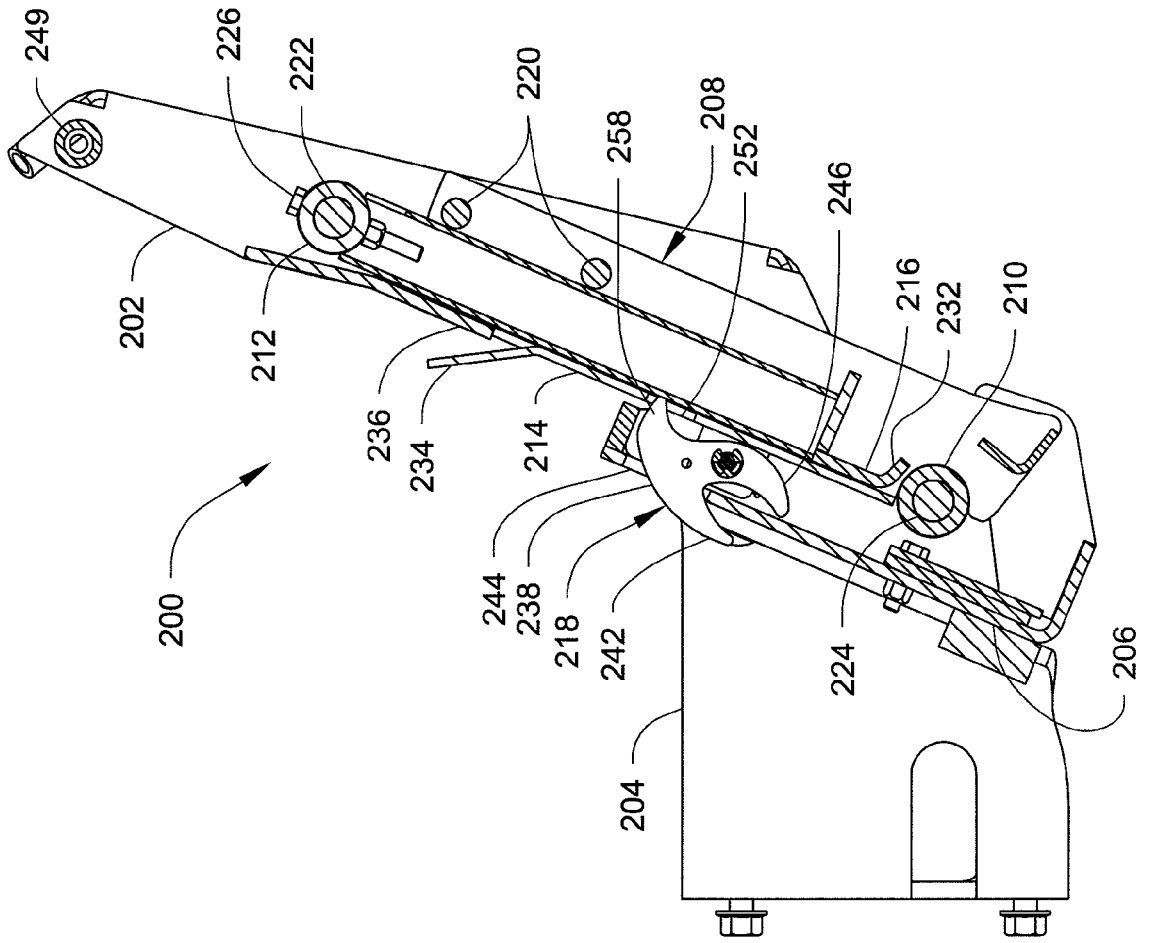
249
226
222
220
258
208
252
246
216
232
210
202
212
236
234
214
200
244
238
218
242
224
206
204

Fig. 8A

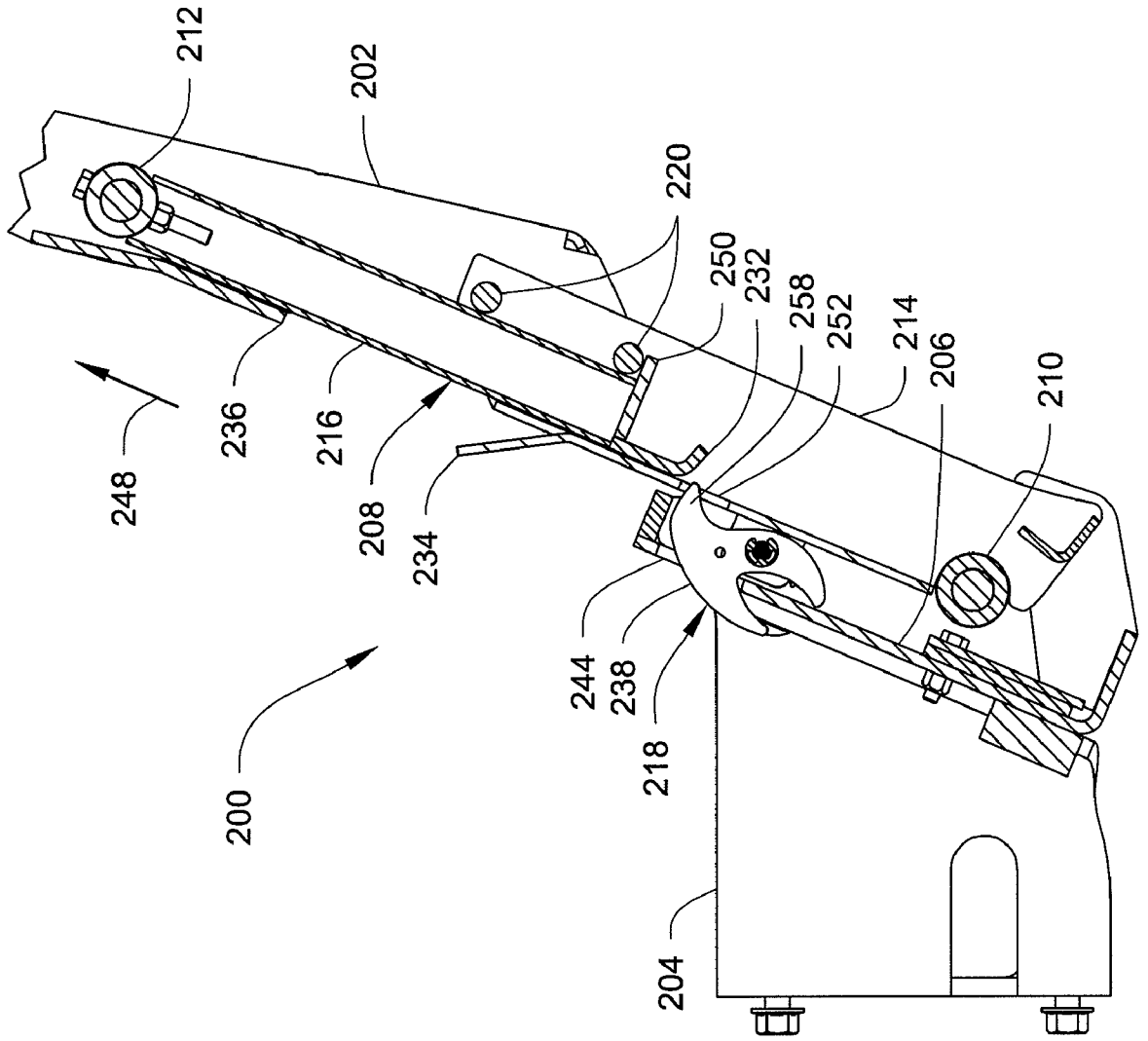
212
202
220
250
232
258
252
214
206
210
248
236
216
208
234
244
238
218
200
204

Fig. 8B

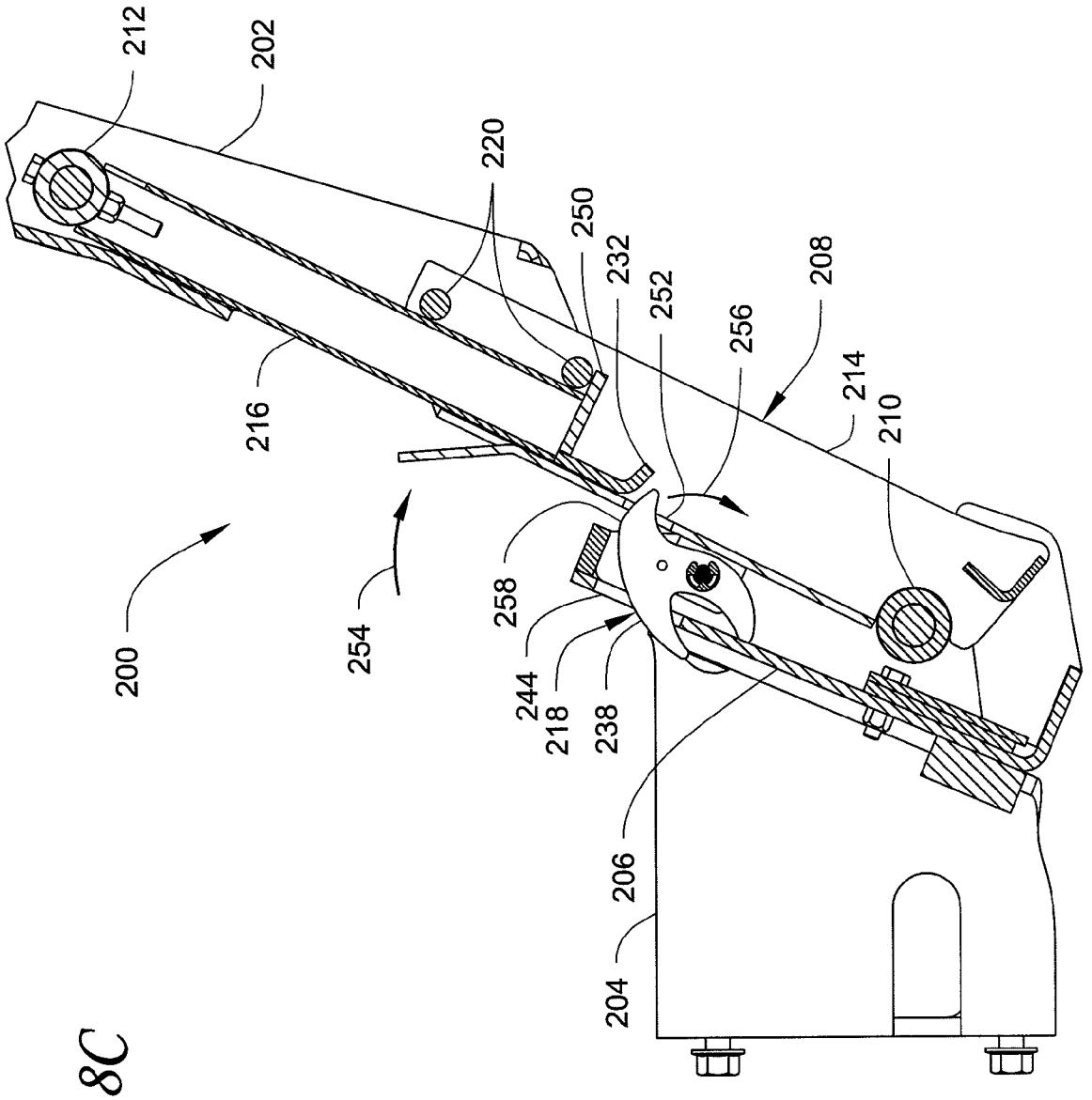
212
202
220
250
232
252
256
208
214
210
216
200
254
258
244
218
238
206
204

Fig. 8C

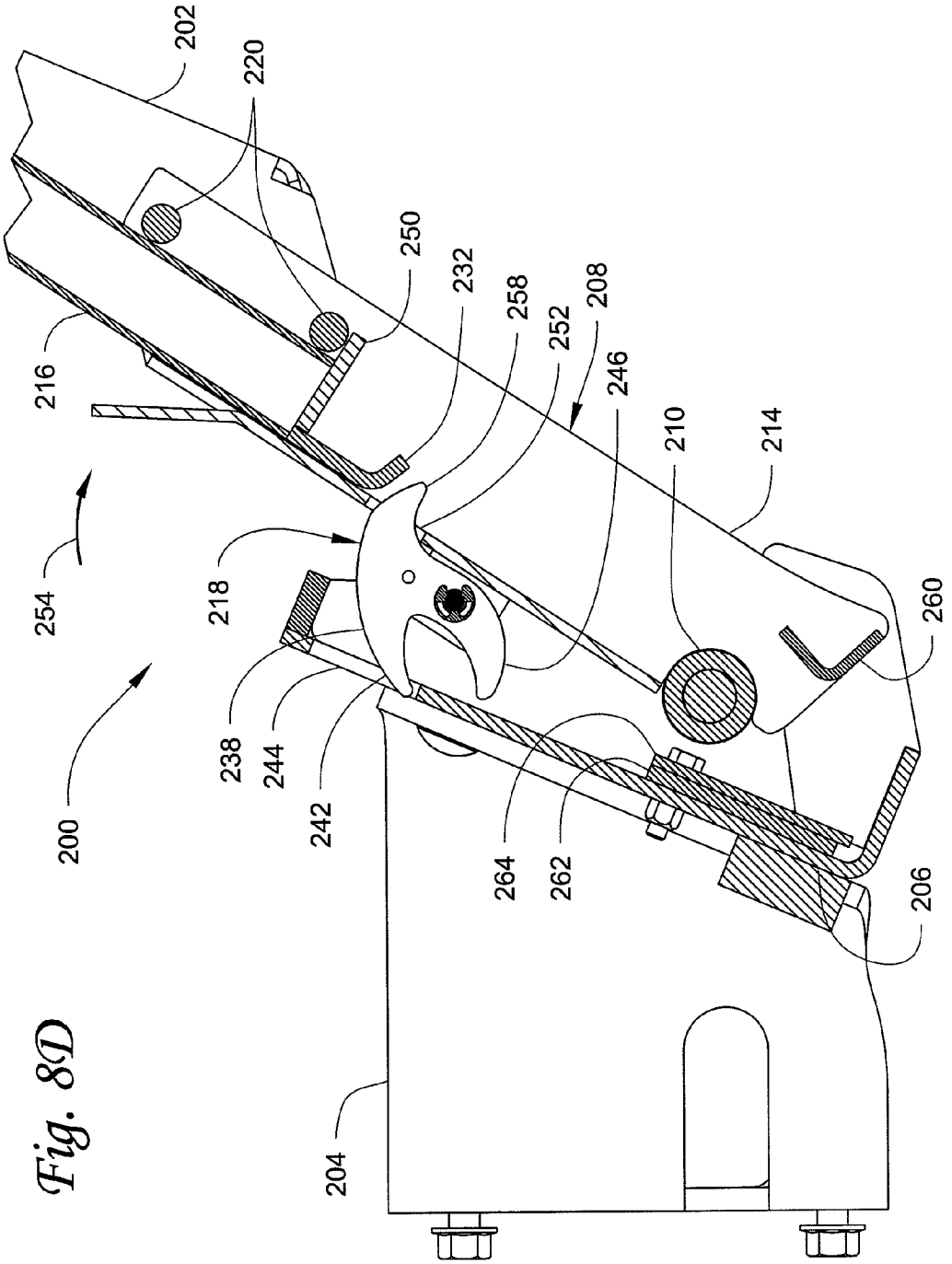
202
220
216
250
232
258
252
208
246
210
214
254
218
260
200
238
244
242
264
262
206
204

Fig. 8D

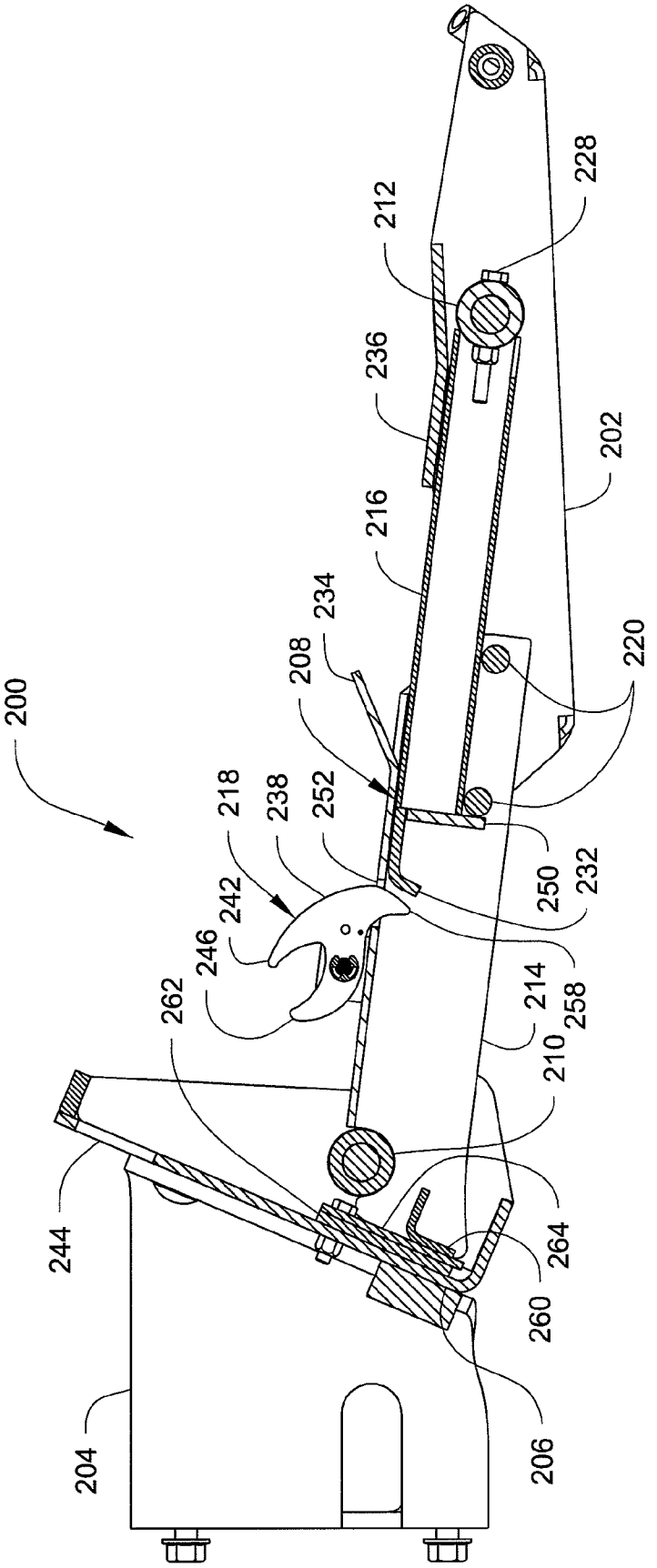
200
204
206
208
210
212
214
216
218
220
228
232
234
236
238
242
244
246
250
252
258
260
262
264

Fig. 8E

PLATFORM ASSEMBLY FOR USE WITH WORKING VEHICLE

RELATED APPLICATIONS

This application claims the benefit of U.S. Provisional Appl. No. 60/901,399, filed Feb. 15, 2007, which is incorporated herein by reference in its entirety.

TECHNICAL FIELD

The present invention relates generally to working vehicles such as utility loaders of the otherwise walk-behind variety and, more particularly, to ride-on, e.g., stand-on, platform assemblies for use with the same.

BACKGROUND

Walk-behind power machines such as wide-area lawn mowers and compact utility skid-steer loaders have been in use for some time. These vehicles generally include a frame having an engine that not only powers drive members, but an optional implement such as a cutting deck or trencher as well. Rearwardly located controls are typically provided to permit operator control from behind the vehicle. By selectively manipulating the controls, the operator can control the direction and speed of the vehicle. Walk-behind vehicles may provide potential advantages over conventional riding units including, for example, simpler operation, lower operating cost, higher maneuverability, and smaller size.

While effective, operation of walk-behind vehicles may, in certain circumstances, result in premature operator fatigue due to the need to continually walk behind the vehicle during operation. For example, in the commercial landscape and lawn care business, it is not uncommon to operate these machines in excess of eight hours per day.

To address this and other issues, various platforms or sulkies have been developed that attach to a rear portion of the vehicle. These sulkies typically include a ground-engaging member such as a wheel so that the sulky may support the operator in rolling engagement with the ground. The sulky, with the operator in place, may then be pulled across the ground by the vehicle.

While conventional sulkies may advantageously reduce operator fatigue, drawbacks remain. For example, it is sometimes desirable for a vehicle to be able to easily revert to a walk-behind configuration for certain conditions. However, many sulkies are not designed for easy removal, resulting in time-consuming actions to detach/re-attach the sulky. Other configurations provide walk-behind capability by repositioning the sulky to a storage position without removing the sulky from the vehicle. Such sulkies, however, typically require secondary mechanisms, e.g., chains or the like, that must be separately attached to the vehicle in order to secure the sulky in the desired position.

Still further, sulkies may require periodic maintenance to ensure operating effectiveness. For example, conventional pneumatic sulky tires are subject to air leaks and flats, resulting in undesirable vehicle down-time. Further, for example, operation of sulkies in wet areas may result in excessive mud and debris collection on the tire. This debris may eventually interfere with tire rotation (e.g., locking of the tire), which may result in turf damage and/or reduced sulky performance.

SUMMARY

Embodiments of the present invention are directed to platform assemblies for supporting an operator on an otherwise walk-behind working vehicle, and to working vehicles incorporating the same. In one embodiment, the platform assembly is supported by the working vehicle (e.g., cantilevered therefrom) and suspended above a surface of the ground, negating the need for a wheel or other ground-engaging member.

In one embodiment, a platform assembly for use with a ground traversing vehicle is provided, wherein the platform assembly includes an elongate arm assembly having a first end and a second end. The first end is operable to attach to the vehicle such that the arm assembly, when in a first position, forms a cantilever supported by the vehicle at the first end such that the second end of the arm assembly is spaced above a ground surface. An operator platform is also provided and pivotally attached to the second end of the arm assembly for pivoting of the platform, relative to the arm assembly, about a transverse pivot axis.

In another embodiment, a platform assembly for supporting an operator relative to a vehicle and at a location spaced above a ground surface is provided. The platform assembly includes: an attachment apparatus for attaching the platform assembly to the vehicle; and an arm assembly. The arm assembly includes: a first end and a second end, the first end pivotally attached to the attachment apparatus for pivoting of the arm assembly about a first transverse axis, between: a first position corresponding to a deployed position of the platform assembly; and a second position corresponding to a stowed position of the platform assembly. An operator platform is also provided and pivotally attached to the second end of the arm assembly for pivoting of the platform, relative to the arm assembly, about a second transverse axis, wherein when the platform assembly is in the deployed position, the operator platform is supported by the arm assembly above the ground surface.

In yet another embodiment, a skid-steer loader is provided having: a chassis supported for movement over a ground surface by powered ground-engaging members; and an elevated operator platform assembly. The platform assembly includes an arm assembly and a platform. The arm assembly includes: a first arm member having a proximal end pivotally attached to a rear portion of the chassis for pivoting of the arm assembly about a first transverse pivot axis; a second arm member engageable with the first arm member in a telescoping relationship; and a stop member associated with the first arm member. The stop member is configured to restrict pivotal motion of the arm assembly so that a distal end of the second arm member is spaced above a ground surface during loader operation. The platform is pivotally attached to the distal end of the second arm member for pivoting, relative to the second arm member, about a second pivot axis.

The above summary is not intended to describe each embodiment or every implementation of the present invention. Rather, a more complete understanding of the invention will become apparent and appreciated by reference to the following Detailed Description of Exemplary Embodiments and claims in view of the accompanying figures of the drawing.

BRIEF DESCRIPTION OF THE VIEWS OF THE DRAWING

The present invention will be further described with reference to the figures of the drawing, wherein:

FIG. **1** is a left side elevation view of a working vehicle, e.g., a walk-behind, skid-steer loader, and a platform assembly in accordance with one embodiment of the invention, the latter shown detached from the vehicle;

FIG. **2** is a left rear perspective view of the vehicle and platform assembly of FIG. **1**;

FIG. **3** is a left side elevation view of the vehicle of FIG. **1** with the platform assembly shown attached and in a first or deployed position;

FIG. **4** is a left rear perspective view of the vehicle and platform assembly of FIG. **3**;

FIG. **5** a left side elevation view of the vehicle of FIG. **3**, but with the platform assembly shown in a second or stowed position;

FIG. **6** is a left rear perspective view of the vehicle and platform assembly of FIG. **5**;

FIG. **7** is an exploded view of a platform assembly in accordance with one embodiment of the invention; and

FIGS. **8**A-**8**E are cross sectional views illustrating an exemplary platform assembly, e.g., the platform assembly of FIG. **7**, and a method of using the same, wherein: FIG. **8**A illustrates the platform assembly latched in the second or stowed position; FIG. **8**B illustrates initial unlocking of a latch mechanism of the platform assembly; FIG. **8**C illustrates initial movement of the platform assembly from the second or stowed position; FIG. **8**D illustrates further movement of the platform assembly towards the first or deployed position; and FIG. **8**E illustrates the platform assembly after movement, e.g., pivoting, to the first or deployed position.

The figures are rendered primarily for clarity and, as a result, are not necessarily drawn to scale. It is further understood that right side elevation and right rear perspective views corresponding to the left side elevation and left rear perspective views of FIGS. **1**-**6** are generally mirror images of these views. Moreover, in some figures, various structure may be omitted for clarity.

DETAILED DESCRIPTION OF EXEMPLARY EMBODIMENTS

In the following detailed description of illustrative embodiments of the invention, reference is made to the accompanying figures of the drawing which form a part hereof, and in which are shown, by way of illustration, specific embodiments in which the invention may be practiced. It is to be understood that other embodiments may be utilized and structural changes may be made without departing from the scope of the invention.

Embodiments of the present invention may be directed to normally walk-behind, self-propelled working vehicles used, for example, to perform ground grooming or ground working operations. More particularly, embodiments of the present invention are directed to platform assemblies for supporting an operator (e.g., in a standing or, alternatively, a sitting position) during operation of the vehicle, and to vehicles incorporating such platform assemblies.

In one exemplary embodiment of the invention, the working vehicle is configured as a ground traversing, compact utility loader **100** as shown in FIG. **1**, sometimes referred to as a skid-steer loader. One such loader is the Dingo TX series utility loader sold by The Toro Company of Minneapolis, Minn., USA. The loader **100** may be of the normally walk-behind variety such as that described in more detail in U.S. Pat. No. 6,709,223 to Walto et al. Those of skill in the art will realize that the loader **100** is illustrative only, and platform assemblies in accordance with embodiments of the present invention may be utilized with loaders of other configurations, as well as with other types of working vehicles, e.g., mowers. Moreover, while described primarily in terms of a loader for outdoor use, embodiments of the present invention may also find application to vehicles designed for indoor use without departing from the scope of the invention.

The loader **100** may be used, e.g., by landscape contractors, to perform various ground working operations. For example, a bucket can be attached to the loader **100** for scooping and carrying dirt. Alternatively, a ground leveling plane could be attached and used for leveling the ground surface. Still further, the loader **100** could be configured to perform various ground grooming operations including, for example, snow removal (when a corresponding snow plowing blade is attached thereto), and trenching to name a few.

As described herein, the loader **100** may include a platform assembly **200** (shown detached in FIG. **1**) in accordance with embodiments of the present invention. The platform assembly **200** may support the operator relative to the vehicle during operation of the loader **100**.

As described herein, the platform assembly **200** may be configured to provide an operator platform **202** that is suspended or cantilevered from a rear portion of the loader by an elongate arm assembly **208**. As such, the platform and the operator **140** may be spaced above (e.g., located above) a ground surface **107** during normal vehicle operation (see, e.g., FIG. **3**). As used herein, "suspended" or "cantilever" refers to a structure (e.g., the arm assembly **208**) that is vertically supported against downward forces at only its single point of attachment (e.g., at the vehicle **100**) so that it is free on all sides except the point of attachment. As a result, the loader **100** may bear the weight of the platform assembly/operator without the need for a ground-engaging member such as a wheel. Advantages of platform assemblies configured in accordance with embodiments of the present invention will become apparent from the following description and accompanying figures.

FIGS. **1** and **2** illustrate the exemplary loader **100** with the platform assembly **200** shown detached. The loader **100** may include a suitably shaped chassis or frame **102** on which a power source, such as an internal combustion engine **104**, is carried. A hood or shroud **106** may enclose and cover the engine **104**. The loader **100** may further include laterally spaced uprights **108** proximate a rear portion of the frame **102**. Left and right loader arms **110** may be pivotally connected to upper ends of the uprights **108** and extend generally towards the front of the loader **100**. A hydraulic cylinder **112** (only one visible in FIG. **1**) may be connected between the frame **102** and each loader arm **110**. When piston rods of the hydraulic cylinders **112** are extended, the loader arms **110** may pivot about the uprights **108** to raise or lift the distal (e.g., front) ends of the loader arms relative to the ground. Likewise, when the piston rods of the hydraulic cylinders **112** are retracted, the loader arms **110** may pivot in the opposite direction to lower the distal ends of the arms.

The loader **100** may further include a traction system **114** that includes both left and right drive tracks **116** (only left track visible in FIG. **1**) for moving the loader over the ground surface **107**. Each drive track **116** may be configured as an endless, flexible track that is looped or entrained around a rear drive support member **118** and a front idler support member **120**. Each drive track **116** has inwardly extending drive lugs **122** that engage apertures or openings in at least the rear drive support member **118**.

Each rear drive support member **118** may be driven by a separate hydraulic motor **124** coupled thereto, or by any other suitably motor or drive connection. Rotation of the rear drive support member **118** (via the motor **124**) may result in corresponding linear movement of the respective drive track **116** via engagement of the drive lugs **122** on the track with the rear drive support member. As is known in the art, each hydraulic

motor **124** may rotate its respective rear drive support member **118** in either a forward (counterclockwise in FIG. **1**) or reverse (clockwise) direction to permit propelling of the loader **100** either forwardly or in reverse, respectively. As each rear drive support member **118** may be powered by its own independent drive motor **124**, steering control of the loader **100** may be achieved by varying the relative rotational speeds and directions of the motors, and thus the speeds and directions of the individual tracks **116**.

The loader **100** may further include a control area **126** that, in the illustrated embodiment, is located near the rear of the loader proximate the upper ends of the uprights **108**. The control area **126** may include various controls, e.g., levers **128**, that control loader operation, e.g., cause the hydraulic cylinders **112** to lift the loader arms **110**. In addition, the control area **126** may also include a movable control handle **130** to control the traction system **114** that drives the loader **100**. Once again, exemplary control and traction systems may be described in greater detail elsewhere (see, e.g., U.S. Pat. No. 6,709,223 to Walto et al.).

As mentioned above, ground grooming or ground working attachments (not shown) may be connected to an attachment plate **132** located at the distal front ends of the loader arms **110**. To ease the task of removing and installing attachments on the loader arms **110**, various quick attachment systems may be used. A hydraulic tilt cylinder **134** (see also FIG. **3**) may extend between the attachment plate **132** and a cross-member **136** extending between the loader arms **110** to vary the angle of inclination of attachment plate (relative to loader arms). Thus, by controlling the vertical position of the loader arms **110**, and by controlling the angle of inclination of the attachment plate **132** relative to the loader arms, the operator may use the loader **100** to perform a variety of ground grooming and/or ground working operations, depending upon the type of attachment that is coupled to the attachment plate **132**.

During conventional operation, the operator may walk behind the loader **100** in a manner similar to that of a walk-behind lawn mower. The control area **126** is positioned at a convenient height to be accessible and gripped by the standing operator. Moreover, the attachment of loader arms **110** relative to the upper ends of the uprights **108** may provide the operator with desirable sight lines to the attachment carried on the attachment plate **132**.

To provide the loader **100** with ride-on capability, a platform assembly in accordance with one embodiment of the present invention (e.g., the platform assembly **200** described and illustrated herein) may be provided. In the illustrated embodiments, the platform assembly **200** may include both the platform **202** and an arm assembly **208** that permits attachment of the platform to the loader **100**. As stated above, the platform assembly **200** may provide either stand-on (as shown) or, alternatively, sit-down capability to the loader **100**. The platform assembly **200** may optionally include one or more operator handles (e.g., handle **127** in FIG. **2**) that may be mounted at or near the control area **126**. Such a handle **127** may provide a grip for use with vehicle operation from the platform.

In the illustrated embodiments, the platform assembly **200** may also include an attachment apparatus configured to attach the platform assembly to the loader. In one embodiment, the attachment apparatus includes a mounting plate **206** and attachment members **204**. The attachment members **204** may be operable to fasten, e.g., bolt, to the frame **102** of the loader **100** (see FIG. **4**), while the mounting plate **206** may fasten, e.g., bolt, to the attachment members.

While shown as utilizing the attachment apparatus, other embodiments may attach the platform assembly **200** to the vehicle in other ways, e.g., welding, quick-attach mechanisms, etc. Such other methods may eliminate the need for one or both of the mounting plate **206** and attachment members **204** and permit attachment of the platform assembly directly to the frame **102**.

FIGS. **3** and **4** illustrate the platform assembly **200** after attachment to the vehicle, e.g., loader **100**. In these illustrations, the platform assembly **200** is shown in a first or deployed position, e.g., a position to receive the standing operator **140** upon the platform **202**.

In one embodiment, the arm assembly **208** may include a proximal or first end attachable to a rear portion of the vehicle such that the arm assembly forms a cantilever supported by the vehicle **100** at the first end (see FIG. **3**). A distal or second end of the arm assembly **208** may then, when the arm assembly is in a first position corresponding to the deployed position of the platform assembly **200** be spaced above the ground surface **107** as shown in FIG. **3**.

In the illustrated embodiment, the arm assembly **208** includes a pivot joint **210** at the first end to permit pivotal attachment of the arm assembly to the vehicle (e.g., to the attachment apparatus (mounting plate **206**)). Thus, the arm assembly **208** may pivot, about the first end, through a defined range about a first transverse pivot axis **211** defined by the pivot joint **210**. For example, the arm assembly **208** may pivot about the first pivot axis **211** between the first position (corresponding to the first or deployed position of the platform assembly **200**) and a second position (corresponding to a second or stowed position of the platform assembly see, e.g., FIG. **5**). Similarly, the platform **202** may be pivotally coupled to a second, opposite end of the arm assembly **208**. The platform **202** may be able to pivot, relative to the arm assembly, about a second transverse axis **213** defined by the pivot joint **212**. As used herein, "transverse" refers to a direction orthogonal to a longitudinal or fore-and-aft axis of the vehicle **100**.

The arm assembly **208**, as further described below, may include a first arm member, e.g., a tubular tunnel **214**, which may receive a second arm member, e.g., a slide **216**, in a telescoping relationship as further explained below. The arm assembly **208** may also include a latch mechanism or assembly **218** that, among other uses, may immobilize the slide **216** (or otherwise limit the ability of the slide to travel) relative to the tunnel **214** when the platform assembly is in the first or deployed position as illustrated in FIGS. **3** and **4**.

The exemplary arm assembly **208** may be configured to telescope as described herein for a variety of reasons. For instance, telescoping engagement of the arm members may allow positioning of the platform (and thus the operator) at a suitable longitudinal location, e.g., a location that provides desirable access to the controls. In addition, the telescoping members may allow the platform to be stowed beneath the controls and above the lowermost portion of the frame as shown in the figures (see, e.g., FIG. **5**).

While illustrated herein as using a telescoping configuration, other embodiments are certainly possible. For example, in another embodiment, the arm assembly **208** could be provided without the telescoping members and instead utilize an intermediate pivot located along the arm assembly. This intermediate pivot could permit the platform and rear portion of the arm assembly to fold upwardly (counterclockwise in FIG. **3**) relative to the forward portion of the arm assembly. Other configurations that allow positioning of the platform at the desired location during use while also permitting stowage in a manner similar to that described herein are also possible without departing from the scope of the invention.

The exemplary platform **202** may include foot surfaces **203***a* and **203***b* as illustrated in FIG. **4**. The surfaces **203***a* and **203***b* may be located to position the operator's feet (and the operator's center of gravity **143** (CG)) over the pivot axis **213** of the pivot joint **212**. The angle of the platform **202** (and thus the angle of the foot surfaces) relative to the arm assembly **208** may thus change as the loader **100** traverses undulations in terrain. Mechanical stops, described in more detail below, may be provided to limit the pivotal movement of the platform **202** relative to the arm assembly, e.g., relative to the slide **216**, to about 40 degrees or less (e.g., 35 degrees) in a first direction **245** (clockwise as viewed in FIG. **3**), and about 5 degrees or less (e.g., zero degrees) in a second (counterclockwise) direction **247** (from a default or unloaded position as illustrated in FIG. **3**).

While described as including various mechanical stops to limit pivotal motion of the platform **202**, those of skill in the art will realize that such stops are exemplary only and embodiments utilizing stops of a different configuration are certainly possible. For instance, an alternative embodiment may eliminate one stop so that the platform is not limited in the first or clockwise direction **245**. As a result, such a platform **202** could pivot about the pivot joint **212** so that a bottom surface of the platform could lie against the loader **100** when the platform assembly is in the stowed position.

As stated above, the arm assembly **208** may be pivotable, relative to the mounting plate **206**, about the pivot axis **211** of the pivot joint **210** (see FIG. **4**) between the first position (see FIG. **3**) and the second position (see FIG. **5**). As a result, the platform assembly **200** may correspondingly pivot between the deployed position and the stowed position. In one embodiment, the arm assembly **208** may pivot about 75 degrees between the first position and the second position.

In the illustrated embodiment, the platform assembly **200** may include a stop member to limit the lowermost position of the arm assembly **208** when the latter is in the first position.

FIGS. **5** and **6** illustrate the loader **100** with the platform assembly **200** attached and in the second or stowed position. With the platform assembly **200** in the second or stowed position, the loader may be controlled in a conventional, e.g., walk-behind, manner. As further described below, the latch assembly **218** (see FIGS. **3** and **4**) may also be used to secure the platform assembly relative to the vehicle **100** when in the stowed position.

FIG. **7** illustrates an exploded view of the platform assembly **200**, a portion of the vehicle **100**, and associated attachment components in accordance with one embodiment of the invention. As illustrated in this view, the attachment members **204** may attach, e.g., bolt, to the frame **102** of the loader **100** and the mounting plate **206** may attach, e.g., bolt, to the attachment members. The slide **216** may slide into the tunnel **214** where it may be supported by the upper interior surface of the tunnel and one or more pins **220** (in the illustrated embodiment, one of the pins **220** is integral, e.g., welded, with the tunnel **214**, while the other is fastened thereto). The slide **216** may attach to the platform **202** at the pivot joint **212** via a pin **222**. Similarly, the tunnel **214** may pivotally attach to the vehicle, e.g., to the mounting plate **206**, at the pivot joint **210** via the pin **224**.

The mounting plate **206** may further incorporate one or more bumpers **230** (see also FIG. **5**). The bumpers **230** may protect the platform assembly **200** (when it is in the second or stowed position) in the event the loader **100** contacts an obstacle during use. While shown as fastening to the mounting plate **206** in the figures, other embodiments may integrally incorporate the bumpers **230**, e.g., incorporate them on the mounting plate or the attachment members **204**.

The pin **222** used to secure the platform **202** to the slide **216** may include a slot **226** that receives a shear bolt **228**. The slot shape may define the pivot range of the platform **202**, and may further act to ultimately shear the pin **228** rather than damage other components in the event the platform is exposed to an excessive pivoting force.

As shown in FIG. **7**, the slide **216** may also include a tab **232** that interacts with the latch assembly **218** as further described below. Moreover, the tunnel **214** may include a catch **234** that receives a portion **236** of the platform **202** when the platform assembly **200** is in the second or stowed position (see FIGS. **5** and **6**).

FIGS. **8**A-**8**E illustrate cross sections of the exemplary platform assembly **200** as it may be attached to the loader **100** (not shown in these views). The section views are taken along a longitudinal, vertical plane passing through a middle section of the assembly **200**.

FIG. **8**A illustrates the platform assembly **200** in the second or stowed position. As shown in this view, when the platform assembly **200** is in the second or stowed position, the slide **216** retracts into the tunnel **214** until the tab **232** contacts the pivot joint **210**. In this position, the portion **236** of the platform **202** may slide underneath the catch **234** to reduce relative movement (e.g., pivoting) of the platform **202** relative to the arm assembly **208**.

As shown in FIG. **8**A, the latch assembly **218** may secure the platform assembly **200** (relative to the loader **100**) in the second or stowed position. The latch assembly **218** may include a latch member **238** pivotally attached to a portion of the tunnel **214**, and a biasing member, e.g., a torsion spring **240** (see FIG. **7**). The torsion spring **240** may bias the latch member **238** in a clockwise direction when viewed in FIG. **8**A.

The latch member **238** may include a first finger **242** that extends through a window **244** formed in the mounting plate **206** and engages an inner or opposite side of the mounting plate when the platform assembly is in the stowed position. A second finger **246** may similarly contact an outer side or portion of the mounting plate **206**, while a third finger **258** may contact a surface of the slide **216** through an opening **252** formed in the tunnel **214** (see also FIG. **7**). As the third finger **258** is in contact with the slide **216** as shown in FIG. **8**A, it may prevent rotation of the biased latch member **238** and thus may keep the first and second fingers **242** generally immobilized such that the platform assembly **200** remains secured in the second or stowed position.

Once again, while not illustrated herein, other embodiments may form the pivot joint **210** directly on the frame **102** of the vehicle, e.g., the separate mounting plate **206** and corresponding attachment members **204** may be unnecessary. In such a configuration, the window **244** could be formed directly through a corresponding portion of the vehicle frame **102**.

To reposition the platform assembly **200** to the first or deployed position, the operator may apply an upward force, e.g., a lifting force **248**, to the platform **202** as shown in FIG. **8**B. The platform may include a handle portion **249** (see FIGS. **7** and **8**A) to assist with applying this upward force. As the lifting force is applied, the slide **216** may translate or telescope out of the tunnel **214** as illustrated. When the slide **216** is fully withdrawn from the tunnel **214**, a lip **250** on the slide may engage one of the pins **220** in the tunnel as shown to prevent separation. At this point, the tab **232** of the slide **216** has also moved past the opening **252** (see also FIG. **7**) formed in the tunnel **214** as shown in FIG. **8**B.

With the slide **216** retracted from the tunnel **214**, the platform assembly **200** may be pivoted in the direction **254** from

the second or stowed position towards the first or deployed position as shown in FIG. **8**C. As the platform assembly **200** is pivoted in the direction **254**, the latch member **238** of the latch assembly **218** may pivot, under the biasing force of the spring **240** (see FIG. **7**) in the direction **256**. Such movement of the latch member **238** may be permitted as the third finger **258** of the latch member **238** is free to move into the opening **252** and enter the interior of the tunnel **214**.

FIG. **8**D illustrates the platform assembly **200** after further rotation in the direction **254**. As illustrated in this view, pivoting of the latch member **238** not only places the third finger **258** of the latch member into the tunnel **214**, it may also allow the first finger **242** to withdraw from the window **244** so that the platform assembly **200** is free to pivot to the first or deployed position.

FIG. **8**E illustrates the platform assembly after it has reached the first or deployed position. The exact location of the deployed position may be controlled by configuring a stop member or surface **260** of the arm assembly **208**, e.g., of the tunnel **214** (see also FIG. **8**D), so that it operatively rests against or contacts a corresponding fixed member or surface **264** (see also FIG. **7**) of the vehicle or vehicle attachment apparatus (e.g., mounting plate **206**) as shown in FIG. **8**E. In one embodiment, an isolation member, e.g., a elastomeric isolation pad **262** as shown in FIGS. **7**, **8**D, and **8**E, may be provided between the surface **264** and the mounting plate **206** to dampen vibrations, impacts, and other dynamic loads. Operable contact of the surfaces **260** and **264** may prevent the arm assembly **208** from pivoting (about the pivot axis **211**) downwardly beyond its first position (and thus prevent the platform assembly from pivoting beyond its deployed position). As a result, a lowermost elevation of the second end of the arm assembly **208** may remain spaced above the ground surface during normal platform operation.

The platform assembly **200** may, once released from the second or stowed position, seek the first or deployed position via gravity, e.g., no biasing members are included in the illustrated embodiment to bias the platform to either the deployed or stowed positions. However, other embodiments that include some sort of biasing or damping member, e.g., a gas cylinder, are contemplated to, for example, slow the descent of the platform assembly **200** towards the first or deployed position and/or to hold the platform in the second or stowed position.

As clearly visible in FIG. **8**E, the third finger **258** of the latch member **238** may be configured to act as a stop to operatively limit translation of the slide **216** into the tunnel **214** when the platform assembly **200** is in the first or deployed position. As a result, the slide **216** may maintain generally the same position relative to the tunnel **214** (although some play may be permitted) during loader operation.

To return the platform assembly **200** to the second or stowed position, the process described in FIGS. **8**A-**8**E may be reversed. That is, the platform assembly **200** may be rotated back towards the second or stowed position. Once the second finger **246** of the latch member **238** contacts the mounting plate **206**, the latch member may begin to pivot. Further pivoting of the platform assembly **200** may result in engagement of the first finger **242** with the mounting plate as shown in FIG. **8**B. As this occurs, the third finger **258** may move out of the opening **252**, permitting the slide **216** to, once again, move into the tunnel **214**. Ultimately, the latch assembly **218** may secure the platform assembly **200** as shown in FIG. **8**A.

During operation of the loader **100**, the platform assembly **200** (when in the deployed position) may support the operator at a location spaced above the ground surface **107** (see FIGS. **3** and **4**). Although not illustrated herein, some embodiments of the invention may include one or more counterweights, e.g., weights attached to the front of the loader **100**, to counteract the moment resulting from cantilevered support of the operator. In other embodiments, the CG of the operator may be sufficiently close to the rear of the loader that such counterweights are unnecessary. In still other embodiments, rear counterweights that are otherwise normally installed may be removed due to the added weight of the platform assembly **200** and operator.

By incorporating both the pivot joints **210** and **212**, embodiments of the platform assembly **200** described and illustrated herein may provide various benefits. For example, the pivot joint **212** (see FIG. **8**E) may allow a slight degree of rocking of the platform **202** to dissipate ground-induced forces that would otherwise be transmitted directly to the operator. Moreover, the pivot joint **212** may permit the operator to remain generally vertical or straight up (e.g., maintain the platform **202** in a generally horizontal orientation) as the vehicle traverses uneven ground. For example, in a situation where the rear portion of the loader **100** lifts upwardly (e.g., the front of the loader pitches forward), the platform **202** may pivot (in the clockwise direction **245** in FIG. **3**), relative to the arm assembly **208**, about the pivot joint **212** (see FIG. **4**). As a result, the platform (e.g., the foot surfaces) may remain in a generally horizontal orientation.

In another instance, the platform assembly **200** (e.g., platform **202** and/or arm assembly **208**) could, at times, contact a ground undulation. When this occurs, the platform assembly **200** may be displaced upwardly, e.g., it may pivot (counterclockwise in FIG. **3**) about the pivot **210** such that the stop surface **260** moves away from the surface **264** (see FIG. **8**E). The ability to accommodate this displacement permits the platform **202** to initially contact and momentarily ride up and along the ground undulation. As platform displacement is accomplished by pivoting along an arc defined by the pivot joint **210**, initial platform movement may be generally upward and to the rear, e.g., counterclockwise in FIGS. **3** and **8**E. Stated alternatively, due to the platform **202** and pivot joint **212** being below the pivot joint **210**, there may be a tendency for the platform and operator to initially move upwardly and rearwardly away from the loader **100** in this instance. However, this rearward pivoting about the pivot joint **210** is illustrative only, and other embodiments wherein the platform assembly is biased for forward pivoting, or embodiments that remove the pivot joint **210** completely (e.g., rigid attachment of the arm assembly to the vehicle), are possible without departing from the scope of the invention.

The platform **202** may also be configured to contact and traverse periodic ground undulations in an effective manner. For example, the shape of the lower side of the platform (e.g., the approach and departure angles of the platform) and the shape of the peripheral edges may be designed to avoid "digging in" in the event that the platform contacts the ground. Optionally, the lower side of the platform assembly **200**, e.g., the platform **202** and/or the arm assembly **208**, may include some sort of wear plates or pads to present a relative smooth (and possibly replaceable) surface in case of contact with the ground surface.

While not illustrated herein, the platform assembly **200** may further incorporate additional pivot joints. For example, a pivot joint that permits the platform **202** to pivot about a generally longitudinal axis of the loader could be included to allow side-to-side (or "roll") pivoting of the platform where such platform motion would be desirable. In another embodiment, the platform could pivot about a generally vertical pivot

joint, e.g., a pivot joint located at either end of the arm assembly **208**, to allow twisting or "yaw" movement of the platform.

The complete disclosure of the patents, patent documents, and publications cited in the Background, the Detailed Description of Exemplary Embodiments, and elsewhere herein are incorporated by reference in their entirety as if each were individually incorporated.

Illustrative embodiments of this invention are described and reference has been made to possible variations within the scope of this invention. These and other variations, combinations, and modifications in the invention will be apparent to those skilled in the art without departing from the scope of the invention, and it should be understood that this invention is not limited to the illustrative embodiments set forth herein. Accordingly, the invention is to be limited only by the claims provided below and equivalents thereof.

What is claimed is:

1. A platform assembly for use with a ground traversing vehicle, the platform assembly comprising:

an elongate arm assembly comprising a first end and a second end, the first end operable to attach to the vehicle such that the arm assembly, when in a first position, forms a cantilever supported by the vehicle at the first end such that the second end of the arm assembly is spaced above a ground surface, wherein the first end of the arm assembly comprises a pivot joint configured to pivotally attach the arm assembly to the vehicle such that the arm assembly may pivot, relative to the vehicle, about the first end between the first position and a second position; and

an operator platform pivotally attached to the second end of the arm assembly for pivoting of the platform, relative to the arm assembly, about a transverse pivot axis.

2. The platform assembly of claim **1**, wherein the arm assembly further comprises: a first arm member; and a second arm member, wherein the first arm member receives the second arm member in a telescoping relationship.

3. A platform assembly for supporting an operator relative to a vehicle and at a location spaced above a ground surface, the platform assembly comprising:

an attachment apparatus for attaching the platform assembly to the vehicle;

an arm assembly comprising: a first end and a second end, the first end pivotally attached to the attachment apparatus for pivoting of the arm assembly about a first transverse axis, between: a first position corresponding to a deployed position of the platform assembly; and a second position corresponding to a stowed position of the platform assembly; and

an operator platform pivotally attached to the second end of the arm assembly for pivoting of the platform, relative to the arm assembly, about a second transverse axis, wherein when the platform assembly is in the deployed position, the operator platform is supported by the arm assembly above the ground surface.

4. The platform assembly of claim **3**, wherein the arm assembly further comprises a stop member that rests against the attachment apparatus to prevent the arm assembly from pivoting beyond the first position.

5. The platform assembly of claim **4**, further comprising an isolation member positioned between the stop member and the attachment apparatus.

6. The platform assembly of claim **3**, wherein the operator platform is configured to support the operator in a standing position.

7. The platform assembly of claim **3**, wherein the platform assembly further comprises at least one mechanical stop to limit pivotal movement of the platform: in a first direction about the second transverse axis to about 40 degrees or less from horizontal; and in a second direction about the second transverse axis to about 5 degrees or less from horizontal.

8. The platform assembly of claim **3**, wherein the arm assembly further comprises: a first arm member; and a second arm member, wherein the first arm member receives the second arm member in a telescoping relationship.

9. The platform assembly of claim **8**, wherein the arm assembly further comprises a latch mechanism to selectively limit movement of the second arm member relative to the first arm member when the platform assembly is in the deployed position.

10. The platform assembly of claim **9**, wherein the latch mechanism is further operable to secure the platform assembly in the stowed position.

11. A platform assembly for supporting an operator on a vehicle, the platform assembly comprising:

an arm assembly comprising:

a first end pivotally attached to a rear portion of the vehicle for pivoting about a first pivot axis;

a second end opposite the first end;

a stop member proximate the first end of the arm assembly, the stop member configured to limit pivotal motion of the arm assembly about the first pivot axis such that a lowermost elevation of the second end of the arm assembly is generally limited to elevations spaced above a ground surface; and

a platform pivotally attached to the second end of the arm assembly for pivoting of the platform about a second pivot axis.

12. The platform assembly of claim **11**, wherein the first pivot axis and the second pivot axis are both transverse to the vehicle.

13. The platform assembly of claim **11**, wherein the platform is configured to position a center of gravity of the operator over the second pivot axis.

14. The platform assembly of claim **11**, wherein the arm assembly is pivotable about the first pivot axis between at least a first position corresponding to a deployed position of the platform assembly, and a second position corresponding to a stowed position of the platform assembly.

15. The platform assembly of claim **14**, wherein the aim assembly further comprises: a first arm member; and a second arm member, wherein the first arm member forms a tube that receives the second arm member in a telescoping relationship.

16. The platform assembly of claim **15**, wherein the arm assembly further comprises a latch mechanism to selectively: immobilize the second arm member relative to the first arm member when the platform assembly is in the deployed position; and secure the platform assembly relative to the vehicle when the platform assembly is in the stowed position.

17. The platform assembly of claim **16**, wherein the latch mechanism comprises a latch member pivotally attached to the first arm member, the latch member comprising a first finger to operatively engage the vehicle when the platform assembly is in the stowed position, and another finger to operatively limit translation of the second arm member relative to the first arm member when the platform assembly is in the deployed position.

18. The platform assembly of claim **11**, the arm assembly further comprising at least one mechanical stop to limit the pivotal movement of the platfoiin in a first direction about the second pivot axis to about 40 degrees or less from horizontal.

* * * * *

UNITED STATES PATENT AND TRADEMARK OFFICE

CERTIFICATE OF CORRECTION

PATENT NO. : 7,980,569 B2
APPLICATION NO. : 12/029791
DATED : July 19, 2011
INVENTOR(S) : Azure et al.

It is certified that error appears in the above-identified patent and that said Letters Patent is hereby corrected as shown below:

In column 12, line 40, delete “aim” and insert --arm--.

Signed and Sealed this
Twenty-second Day of November, 2011

David J. Kappos

David J. Kappos
Director of the United States Patent and Trademark Office