US008821104B2

(12) **United States Patent**
Yasuda et al.

(10) **Patent No.: US 8,821,104 B2**
(45) **Date of Patent: Sep. 2, 2014**

(54) **LOADER WORK MACHINE**

(75) Inventors: **Toyoaki Yasuda**, Osaka (JP); **Masanori Fujino**, Sakai (JP); **Toshihiko Takemura**, Izumi (JP); **Yasuo Nakata**, Sakai (JP); **Yoshitaka Matsubara**, Osaka (JP); **Yoshihiro Ueda**, Sakai (JP); **Yuuki Takano**, Sakai (JP); **Yusuke Kawai**, Sakai (JP); **Ryohei Sumiyoshi**, Sakai (JP); **Hiroyuki Anami**, Kaizuka (JP); **Naoya Muramoto**, Sakai (JP); **Kenji Mitsui**, Sakai (JP); **Youhei Kawano**, Sakai (JP); **Takeshi Ikumura**, Sakai (JP)

(73) Assignee: **Kubota Corporation**, Osaka (JP)

(*) Notice: Subject to any disclaimer, the term of this patent is extended or adjusted under 35 U.S.C. 154(b) by 868 days.

(21) Appl. No.: **12/922,921**

(22) PCT Filed: **Mar. 26, 2009**

(86) PCT No.: **PCT/JP2009/056166**

§ 371 (c)(1),
(2), (4) Date: **Dec. 8, 2010**

(87) PCT Pub. No.: **WO2009/157238**

PCT Pub. Date: **Dec. 30, 2009**

(65) **Prior Publication Data**

US 2011/0091307 A1 Apr. 21, 2011

(30) **Foreign Application Priority Data**

Jun. 26, 2008	(JP)	2008-167356
Jul. 22, 2008	(JP)	2008-188670
Sep. 3, 2008	(JP)	2008-226305
Sep. 3, 2008	(JP)	2008-226306
Sep. 3, 2008	(JP)	2008-226307
Sep. 3, 2008	(JP)	2008-226308
Sep. 3, 2008	(JP)	2008-226309
Sep. 5, 2008	(JP)	2008-228360
Sep. 12, 2008	(JP)	2008-234103

(51) **Int. Cl.**

E02F 3/34	(2006.01)
E02F 9/16	(2006.01)
E02F 9/22	(2006.01)
E02F 3/43	(2006.01)
E02F 9/08	(2006.01)

(52) **U.S. Cl.**

CPC ***E02F 3/3405*** (2013.01); ***E02F 3/3414*** (2013.01); ***E02F 9/2275*** (2013.01); ***E02F 3/432*** (2013.01); ***E02F 9/0816*** (2013.01); *Y10S 414/131* (2013.01)

USPC **414/685**; 414/680; 414/722; 414/918; 248/49; 59/78.1

(58) **Field of Classification Search**

USPC 414/680, 685, 722, 918; 248/49; 59/78.1

See application file for complete search history.

(56) **References Cited**

U.S. PATENT DOCUMENTS

5,547,244	A *	8/1996	Lee	296/102
6,065,276	A	5/2000	Hohnl et al.	

(Continued)

FOREIGN PATENT DOCUMENTS

JP	2006307498	A	11/2006
JP	2008062771	A	3/2008
WO	0227107	A1	4/2002

Primary Examiner — Scott Lowe

(74) *Attorney, Agent, or Firm* — The Webb Law Firm

(57) **ABSTRACT**

A loader work machine is disclosed in which a base portion of each of right/left arms (**77**) is received by an arm support portion (**164**) of a first lift link (**81**) and pivotally supported by a first arm shaft (**88**), and a hydraulic pipe arrangement (**167**) connected to a hydraulic actuator (**98**) extend through an support frame (**11**) from inside to outside of its inner wall (**12**), and toward an arm (**77**). The base portion of the arm (**77**) is supported to the arm support portion (**164**) at a position adjacent a link outer wall (**157**) in a transverse direction so that a hose accommodation space (**165**) is formed between a link inner wall (**156**) and an internal side face of the base portion of the arm (**77**). The hydraulic pipe arrangement (**167**) runs frontward of the first arm shaft (**88**) and a first link shaft (**85**), and is disposed in the hose accommodation space (**165**).

17 Claims, 23 Drawing Sheets

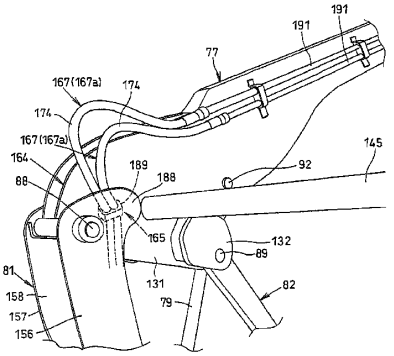

(56) **References Cited**

U.S. PATENT DOCUMENTS

6,098,739	A	8/2000	Anderson et al.	
6,205,665	B1	3/2001	Anderson et al.	
6,283,220	B1 *	9/2001	Carter	169/24
6,684,537	B2 *	2/2004	Ichikawa et al.	37/347
8,303,026	B2 *	11/2012	Yamashita et al.	296/190.1
2004/0028514	A1	2/2004	Mimuro	

* cited by examiner

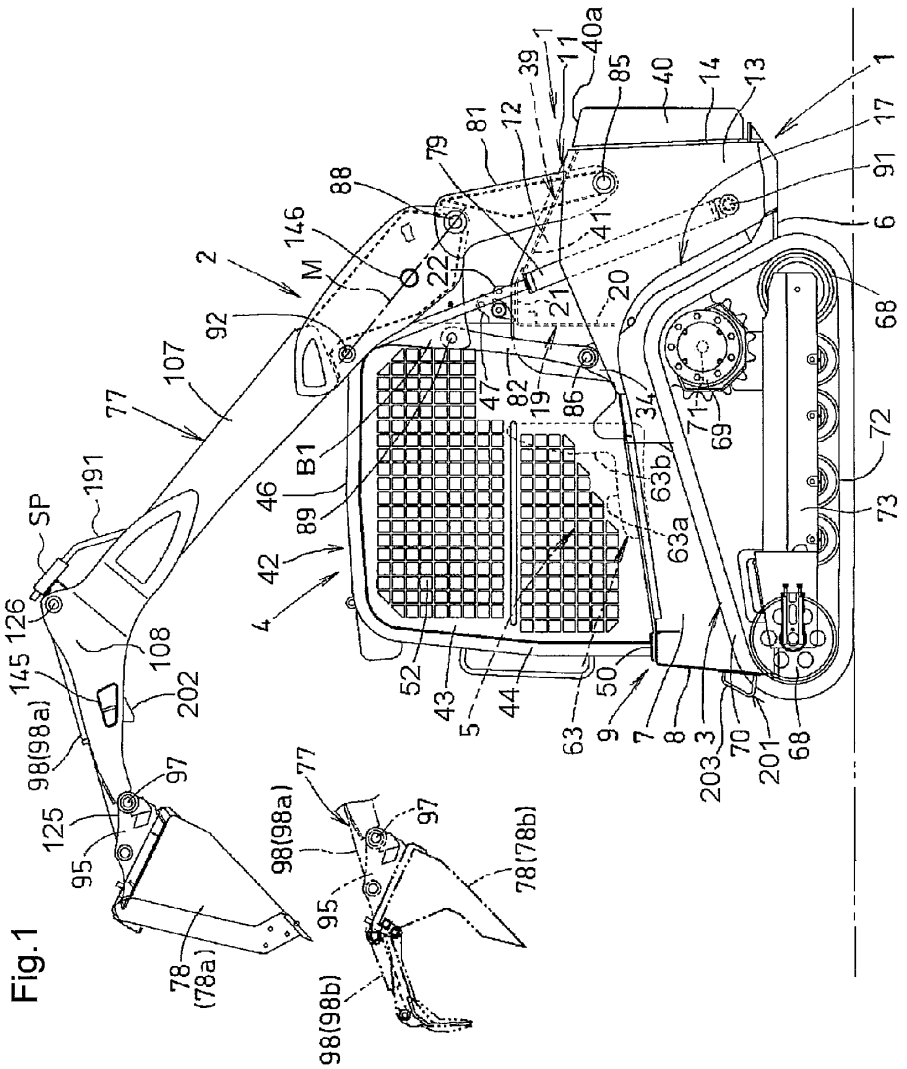
1
17
91
6
68
13
14
40
85
40a
11
1
39
12
81
79
88
146
M
2
22
41
20
21
92
107
77
191
SP
126
145
98(98a)
125
95
97
108
202
78
(78a)
98(98b)
77
98(98a)
97
95
78(78b)
B1
46
89
42
4
47
82
19
86
34
71
69
63b
63a
72
73
52
43
5
44
63
50
9
7
8
3
203
70
201
68

Fig.1

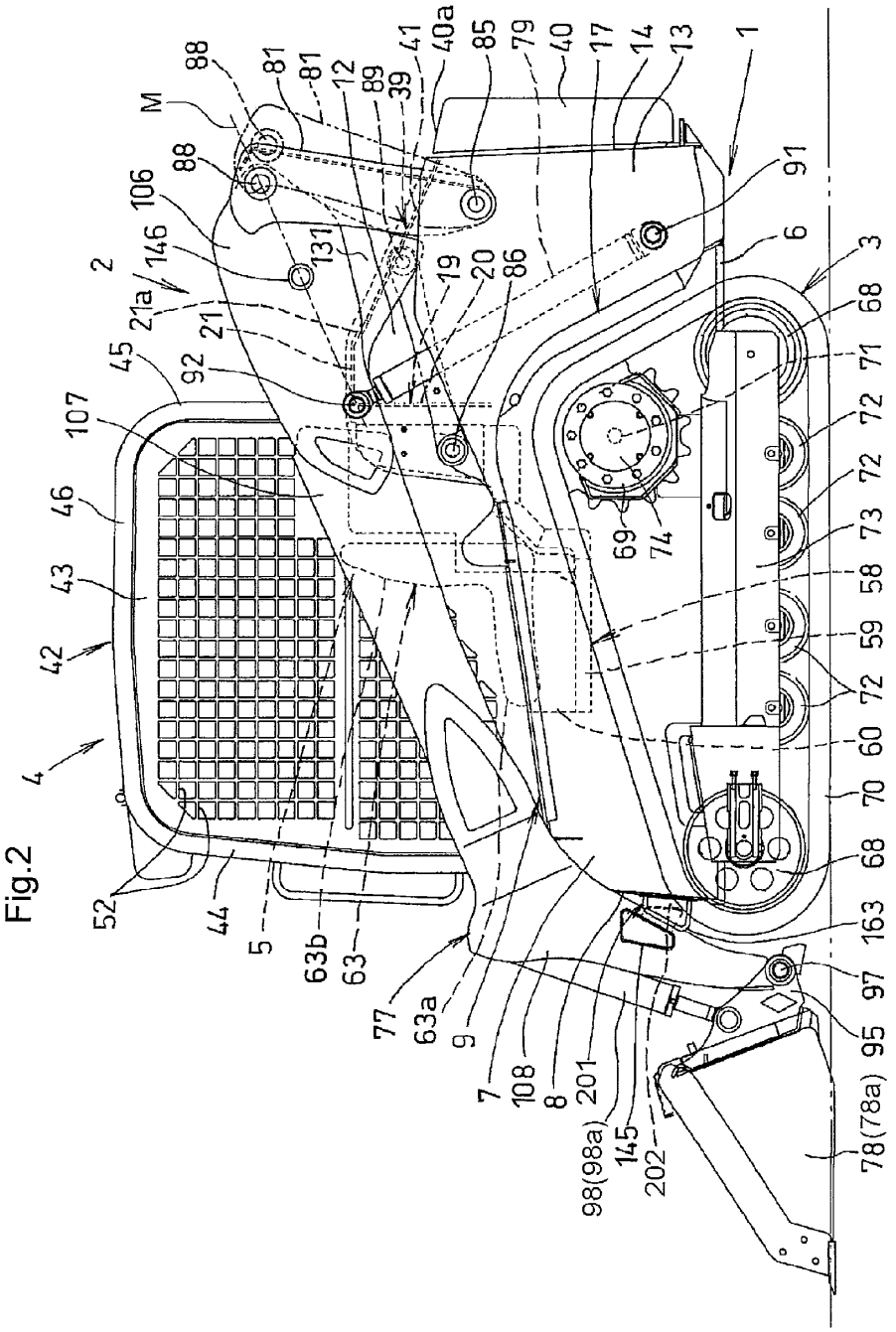
1
2
3
4
5
6
7
8
9
12
13
14
17
19
20
21
21a
39
40
40a
41
42
43
44
45
46
52
58
59
60
63
63a
63b
68
69
70
71
72
73
74
77
78(78a)
79
81
85
86
88
89
91
92
95
97
98(98a)
106
107
108
131
145
146
163
201
202
M

Fig.2

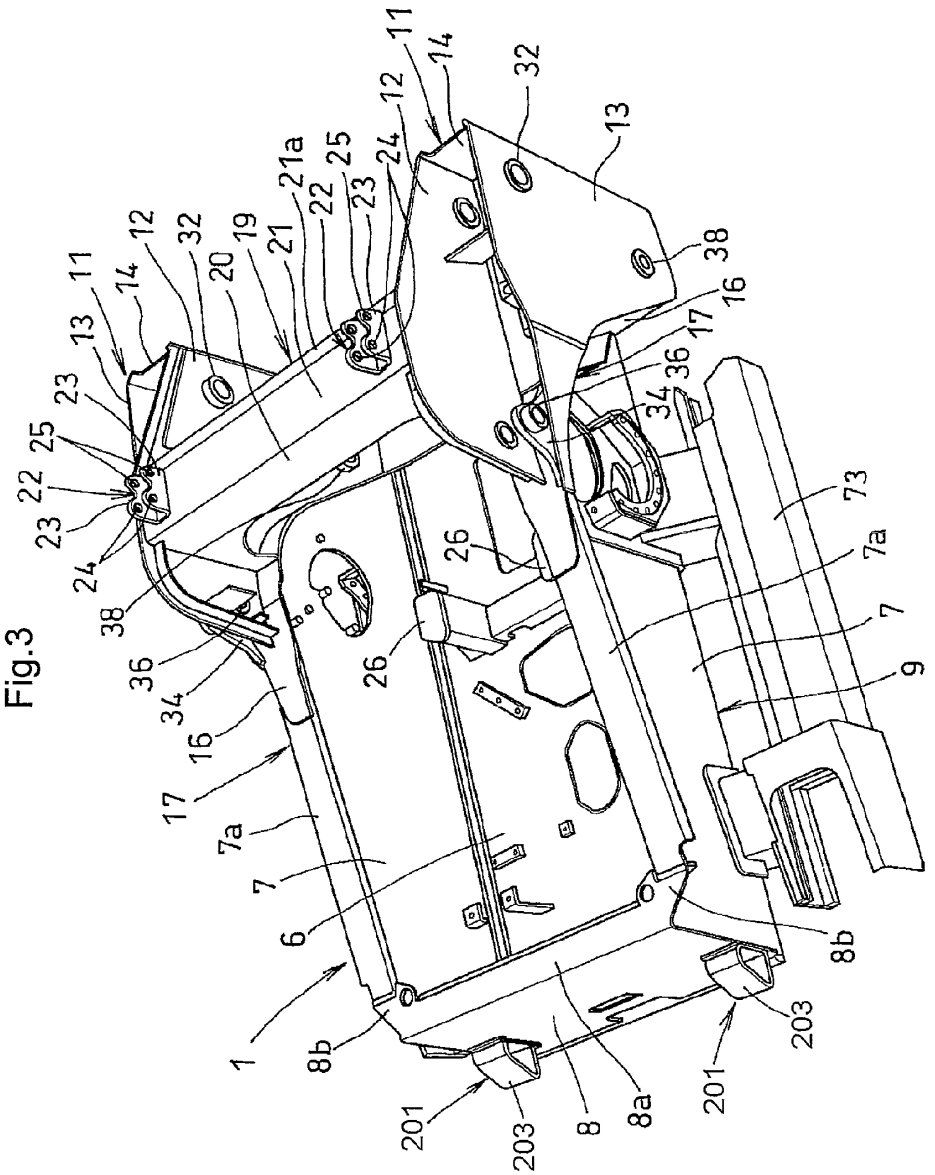
11
14
32
13
12
21a
25
24
22
23
19
21
20
38
16
17
36
34
73
7a
7
9
26
26
38
36
34
16
17
7a
7
6
1
8b
8b
201
203
8
8a
201
203

Fig.3

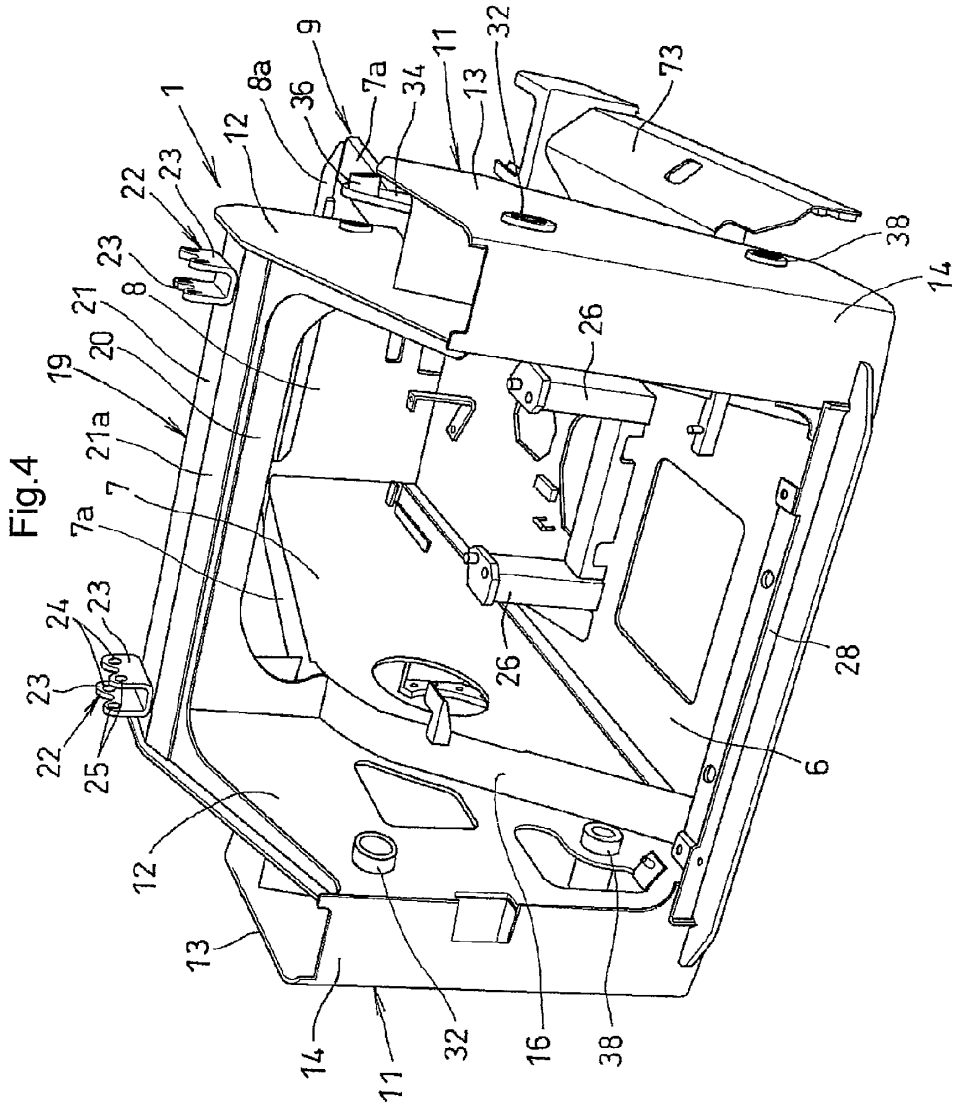
1
12
8a
36
9
7a
34
11
13
32
73
22
23
23
21
8
20
19
21a
7
7a
24
23
23
22
25
12
13
14
11
32
16
38
26
26
28
6
38
14

Fig.4

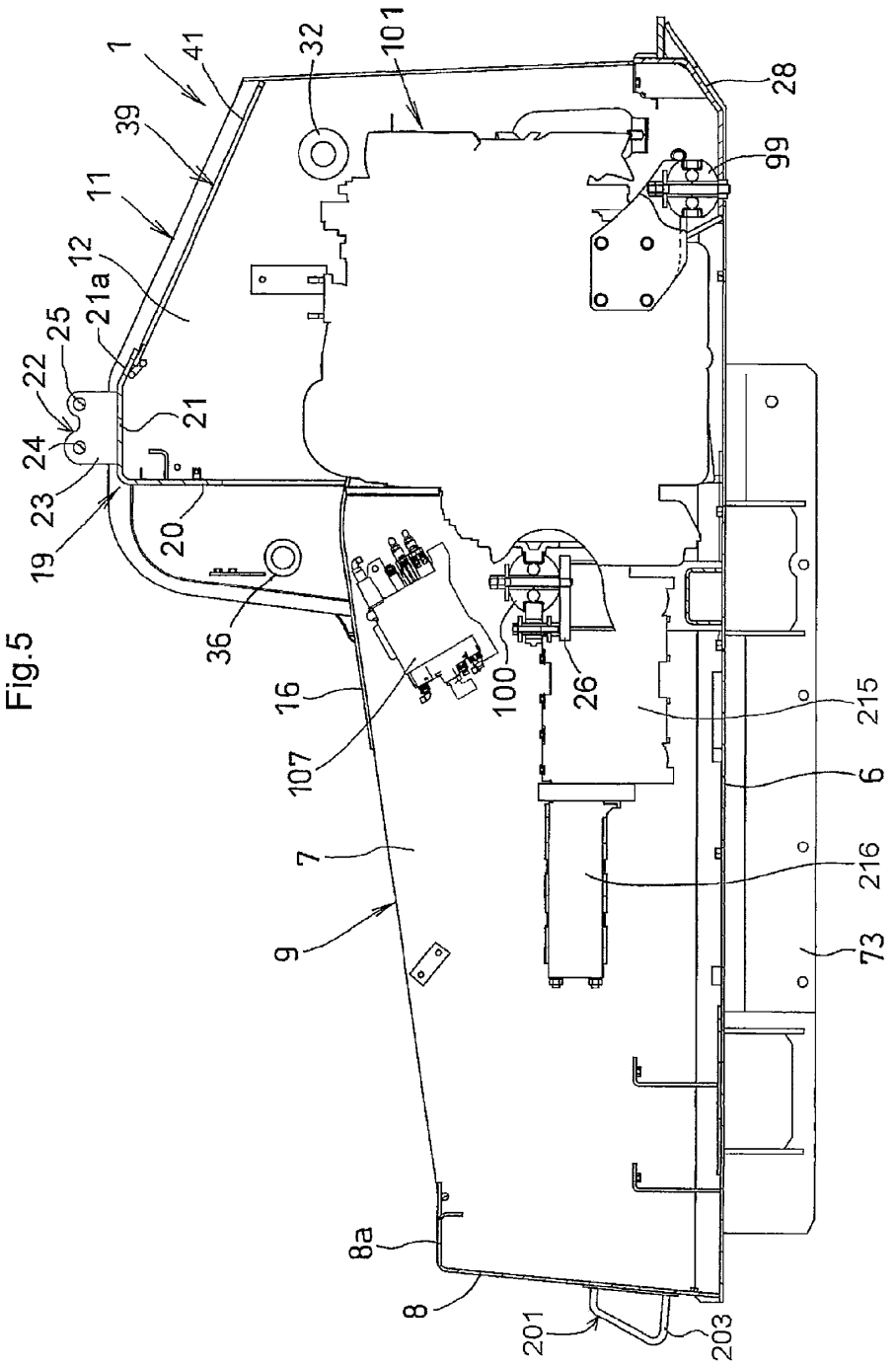
1
41
39
11
12
21a
25
22
24
23
19
21
20
36
32
101
28
99
16
107
100
26
215
6
216
73
7
9
8a
8
201
203

Fig.5

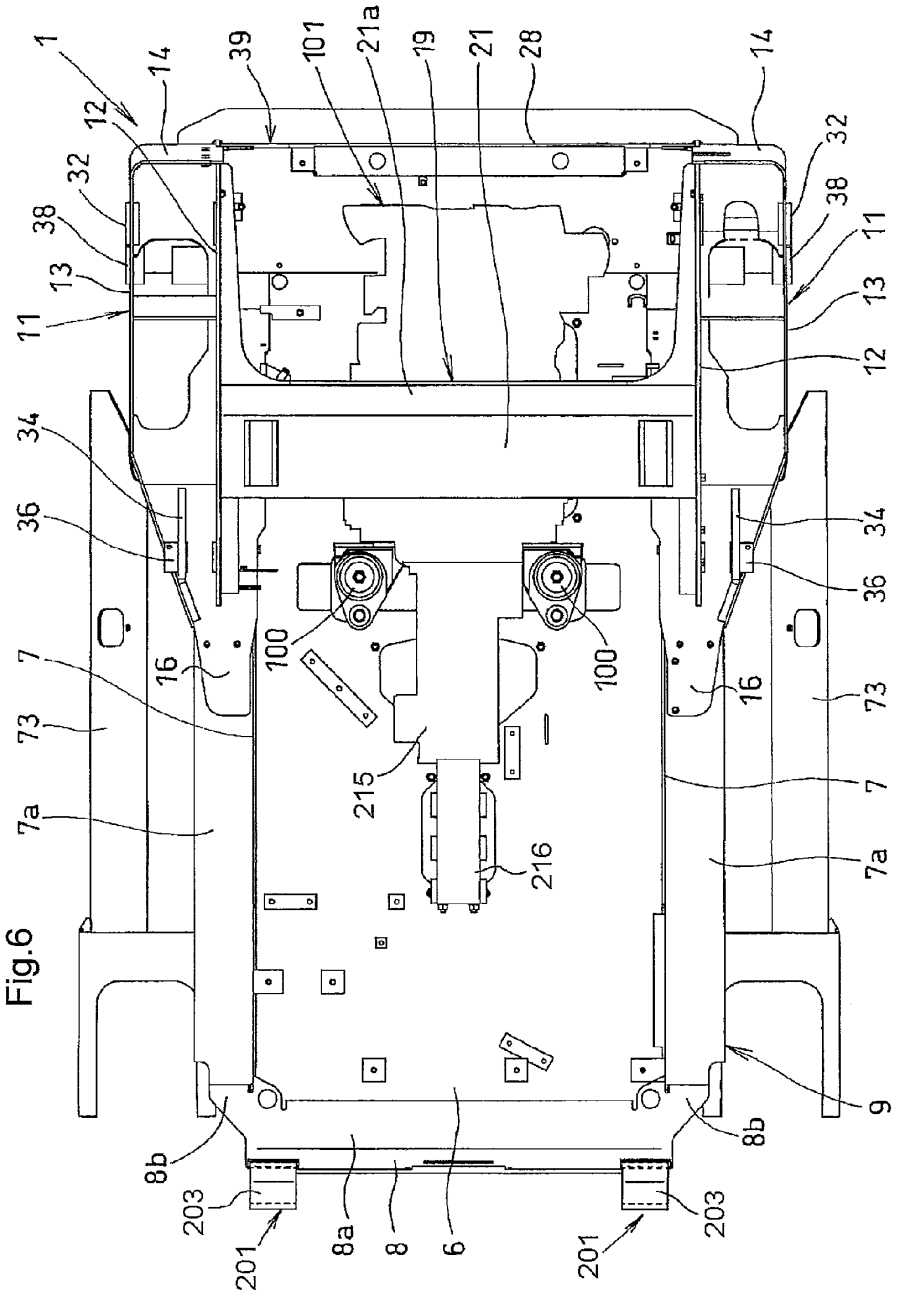
1
14
39
101
21a
19
21
28
14
12
32
38
13
11
32
38
11
13
12
34
36
34
36
100
100
16
16
7
73
73
7
7a
7a
215
216
9
8b
8b
203
203
201
201
8a
8
6

Fig.6

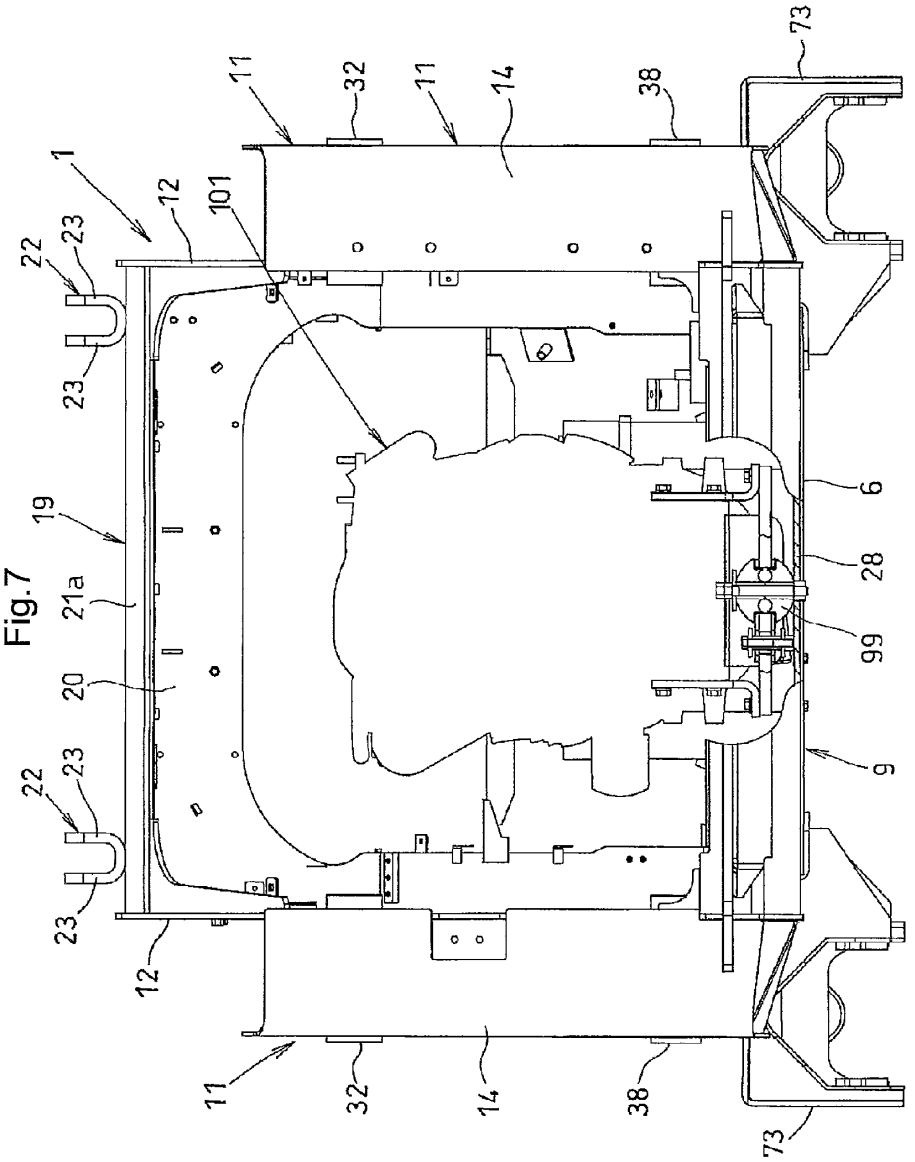
1
12
22
23
23
19
21a
20
22
23
23
12
11
32
14
38
73
11
32
14
38
73
101
6
28
99
9

Fig.7

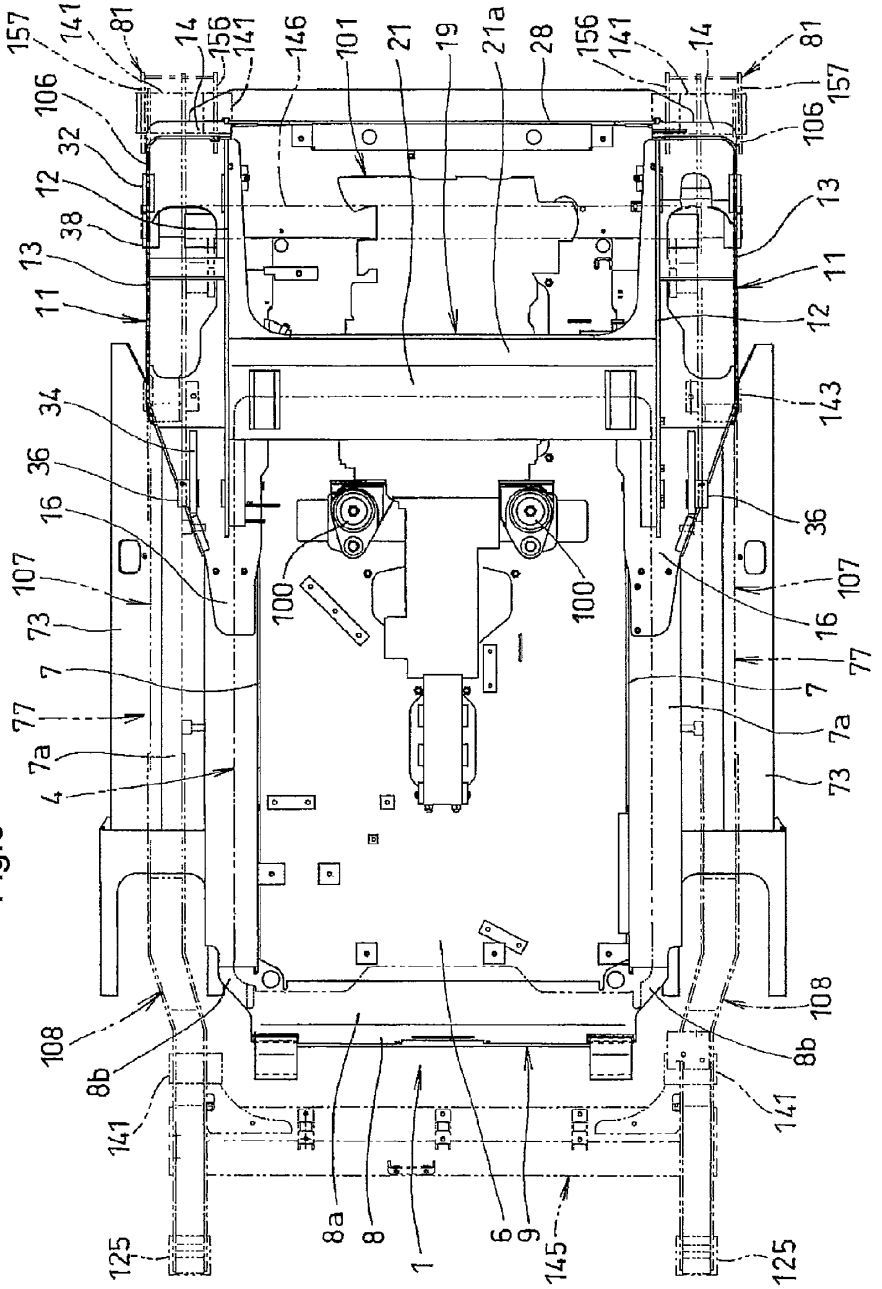
157
141
81
14
156
141
146
101
21
19
21a
28
156
141
14
81
157
106
32
12
38
13
11
34
36
16
107
73
7
77
7a
4
108
8b
141
125
8a
8
1
6
9
145
125
141
8b
108
73
7a
77
7
107
16
36
143
12
11
13
106
100
100

Fig.8

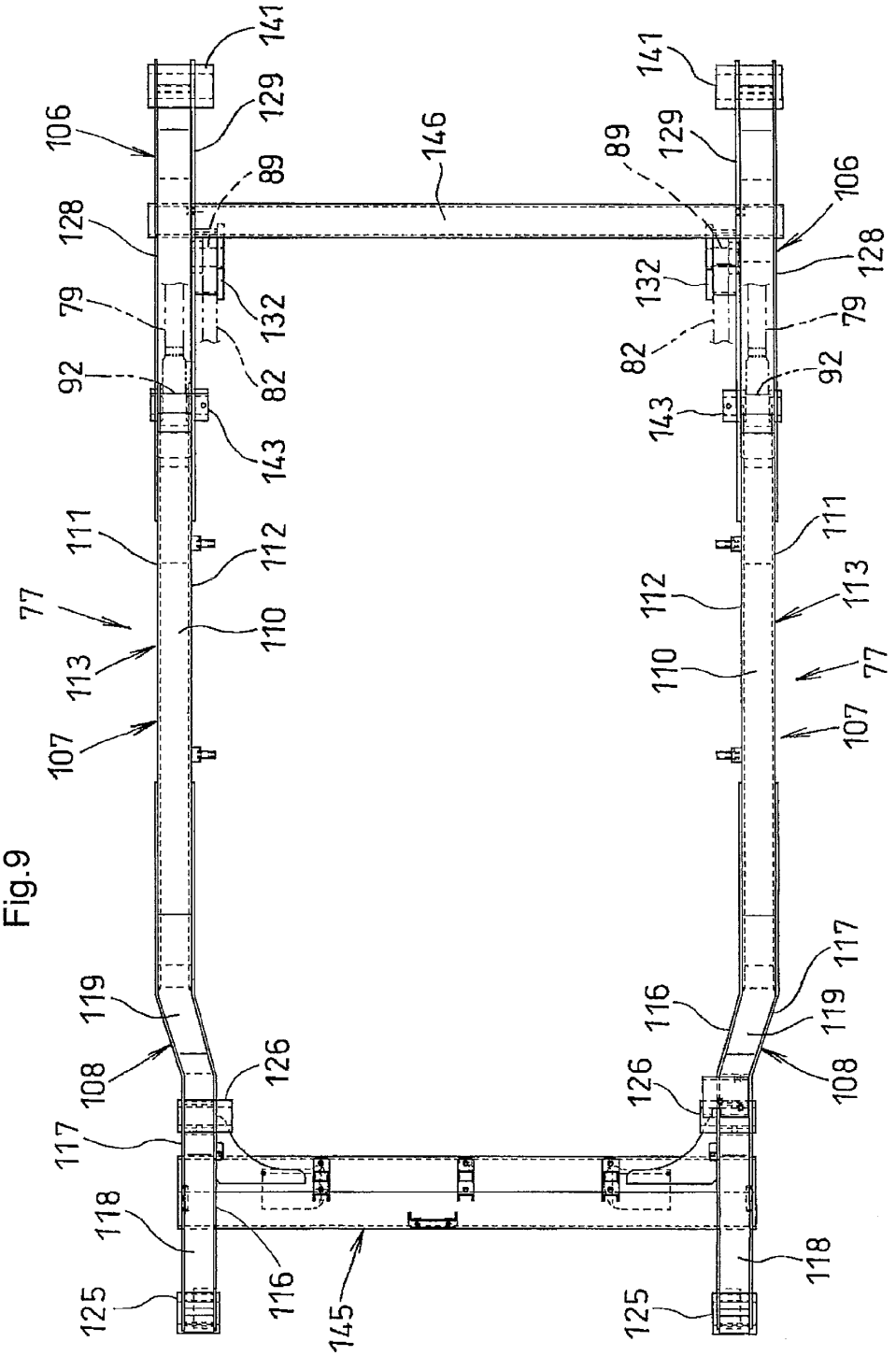
141
129
106
89
146
128
132
79
82
92
143
111
112
77
110
113
107
119
108
126
117
118
116
145
125

Fig.9

Fig.10

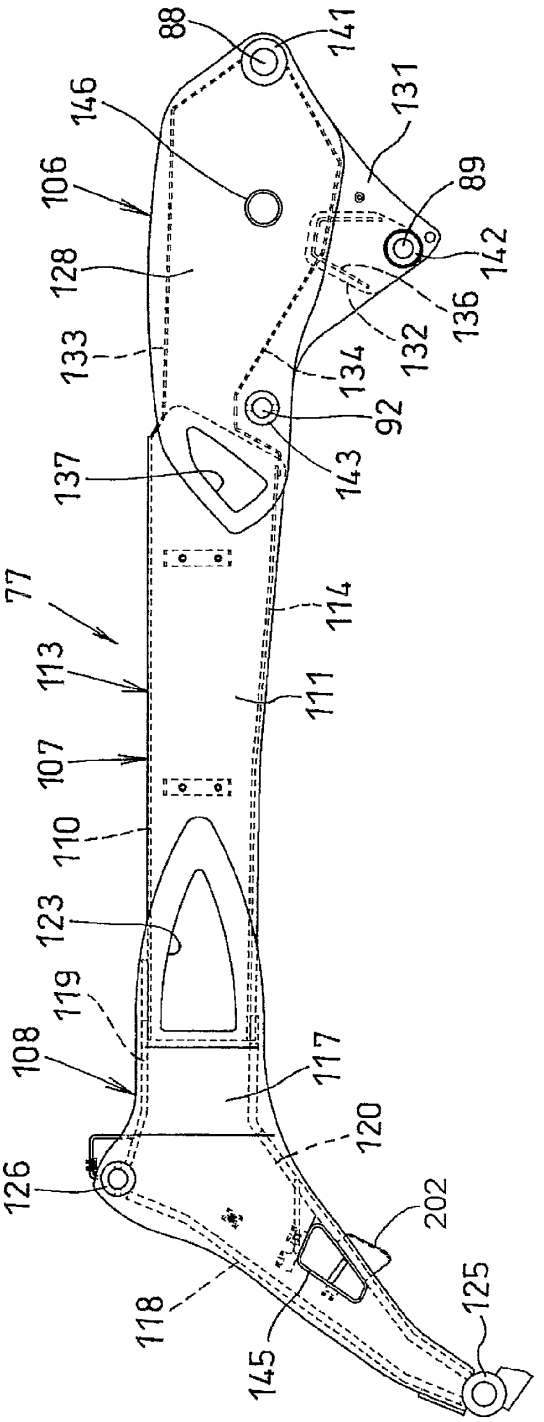
88
141
146
131
106
89
128
142
136
133
132
134
92
137
143
77
114
113
111
107
110
123
119
108
117
120
126
202
118
125
145

Fig.11

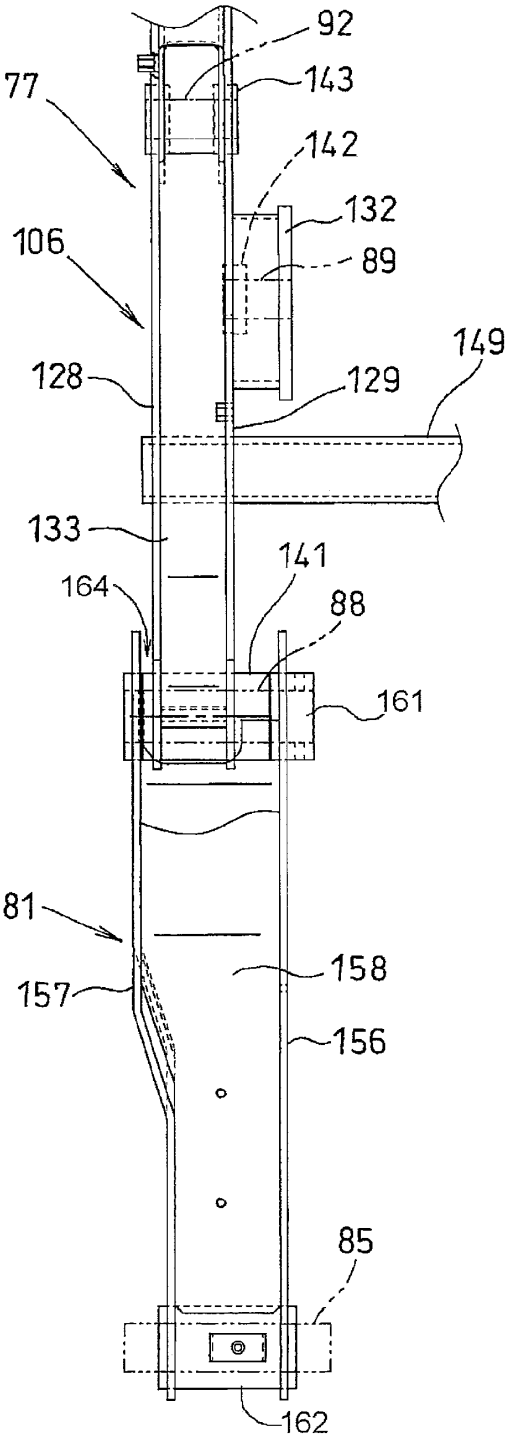
92
143
77
142
132
106
89
149
128
129
133
141
164
88
161
81
158
157
156
85
162

Fig.12

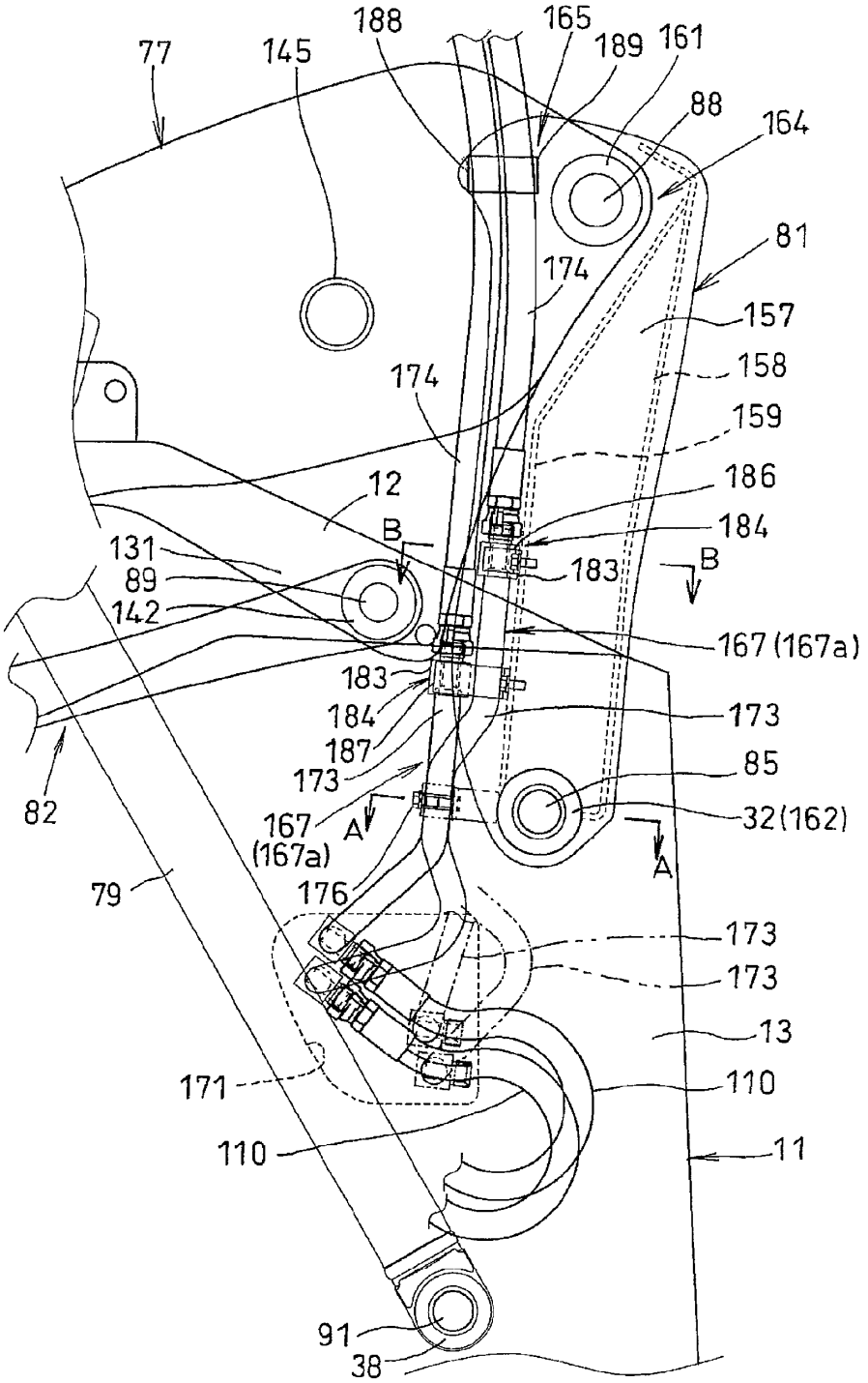
77
145
188
165
189
161
88
164
81
174
157
158
174
159
186
12
184
B
131
183
B
89
142
167 (167a)
183
184
173
187
173
85
82
167
(167a)
A
32 (162)
A
79
176
173
173
13
171
110
110
11
91
38

Fig.13

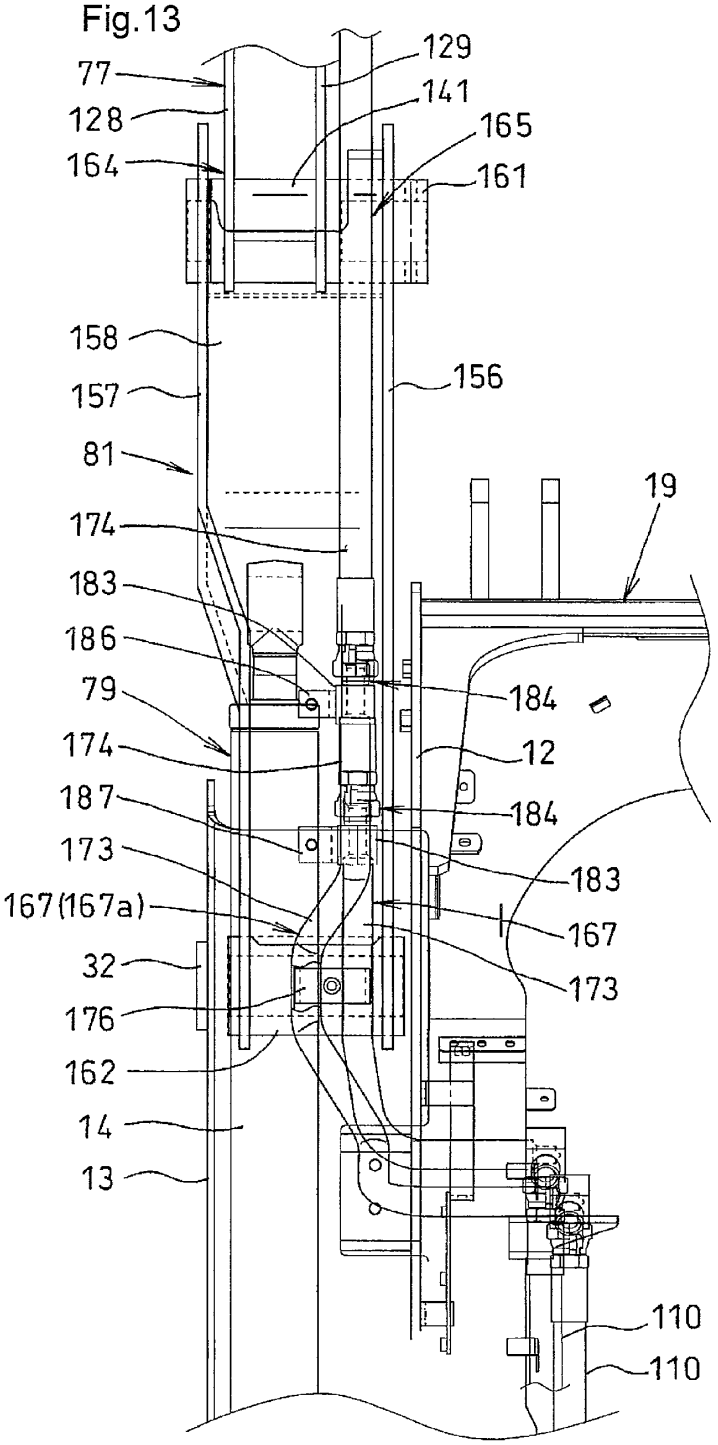
77
128
164
129
141
165
161
158
157
81
156
19
174
183
186
79
174
187
173
167(167a)
32
176
162
14
13
184
12
184
183
167
173
110
110

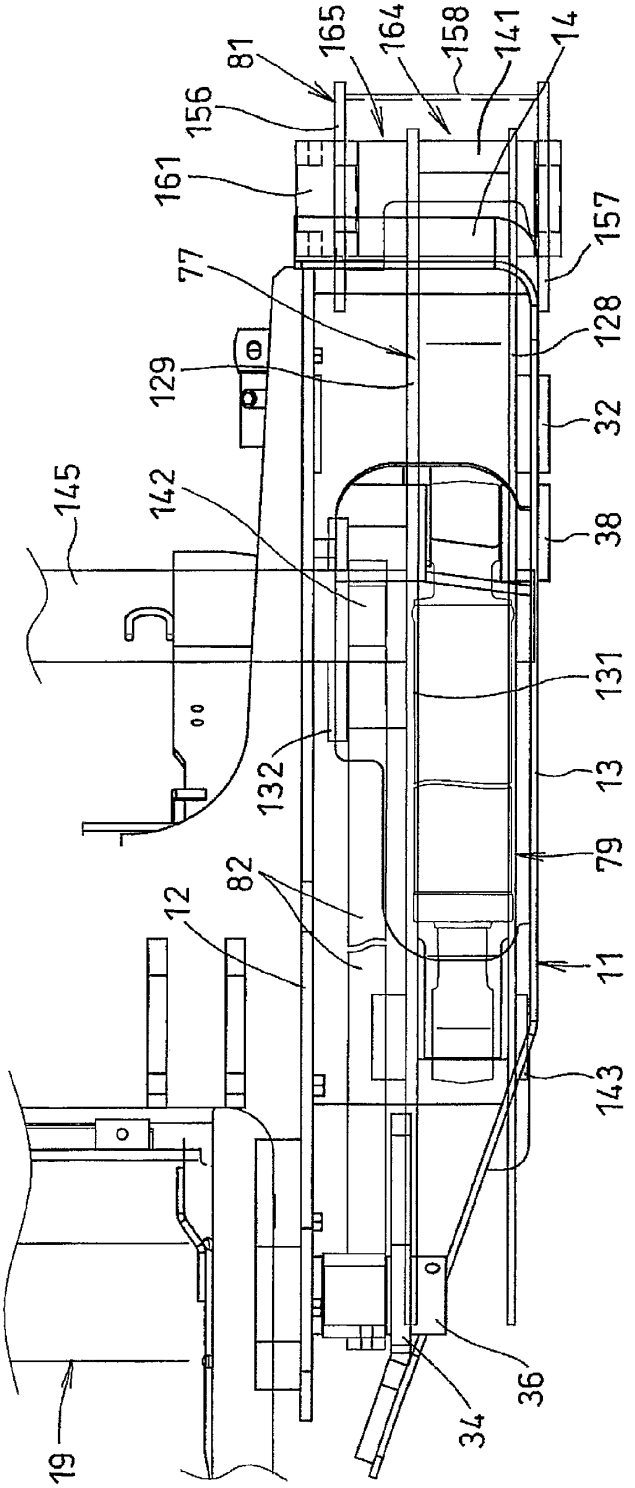
81
165
164
158
141
14
156
161
157
77
128
129
32
145
142
38
131
132
13
79
82
12
11
143
19
34
36

Fig.14

Fig.15

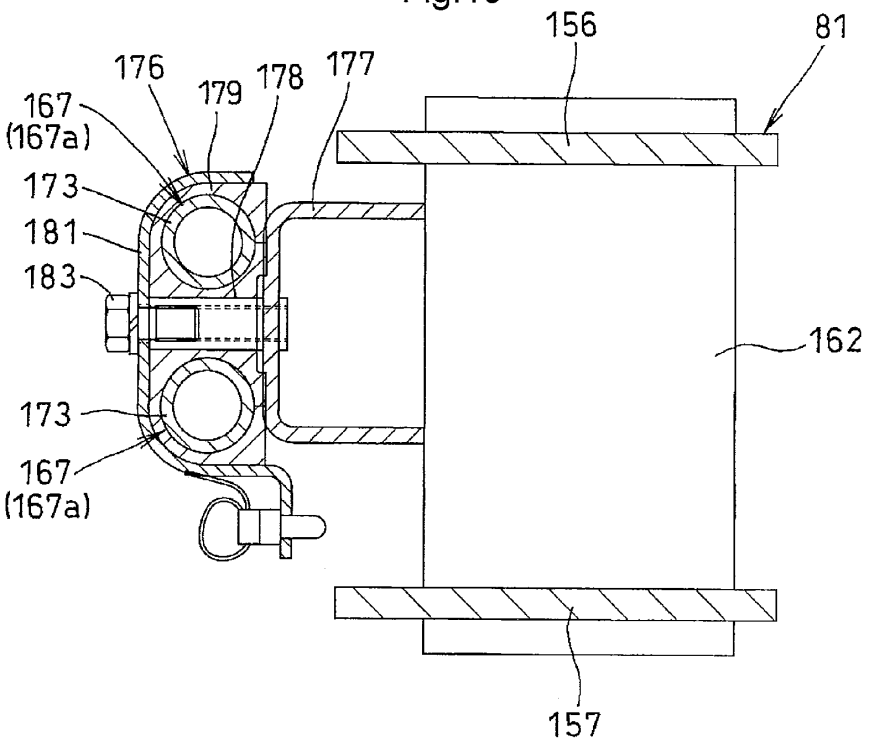
156
81
176
179
178
177
167
(167a)
173
181
183
162
173
167
(167a)
157

Fig.16

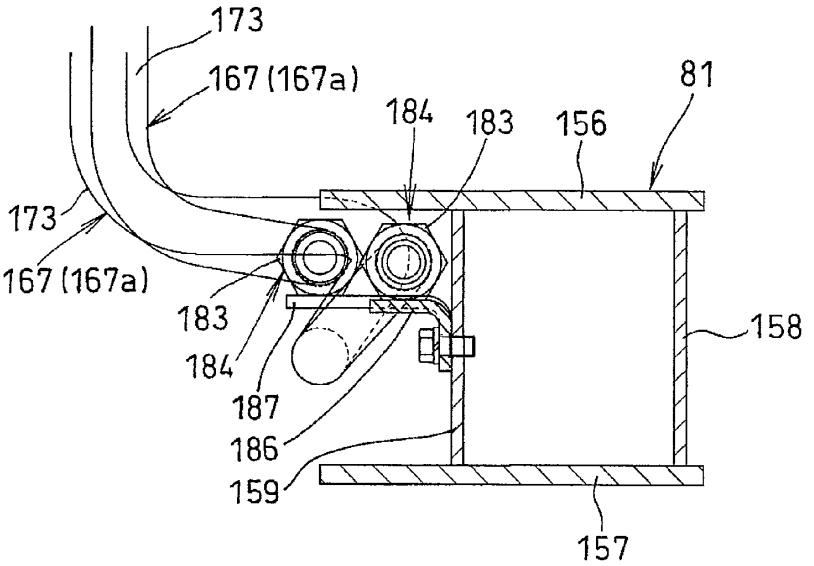
173
167 (167a)
81
184
183
156
173
167 (167a)
183
184
187
186
159
158
157

Fig.17

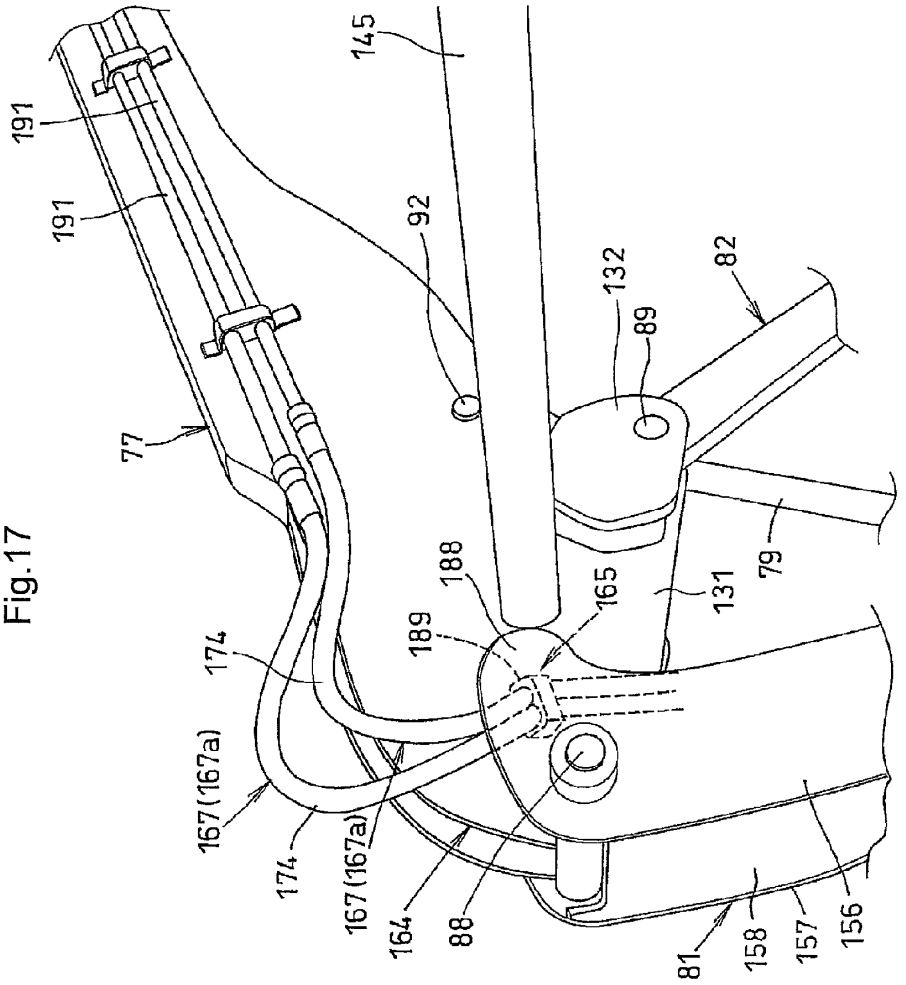
145
191
191
92
132
82
89
77
79
188
165
131
189
174
167(167a)
174
167(167a)
164
88
81
158
157
156

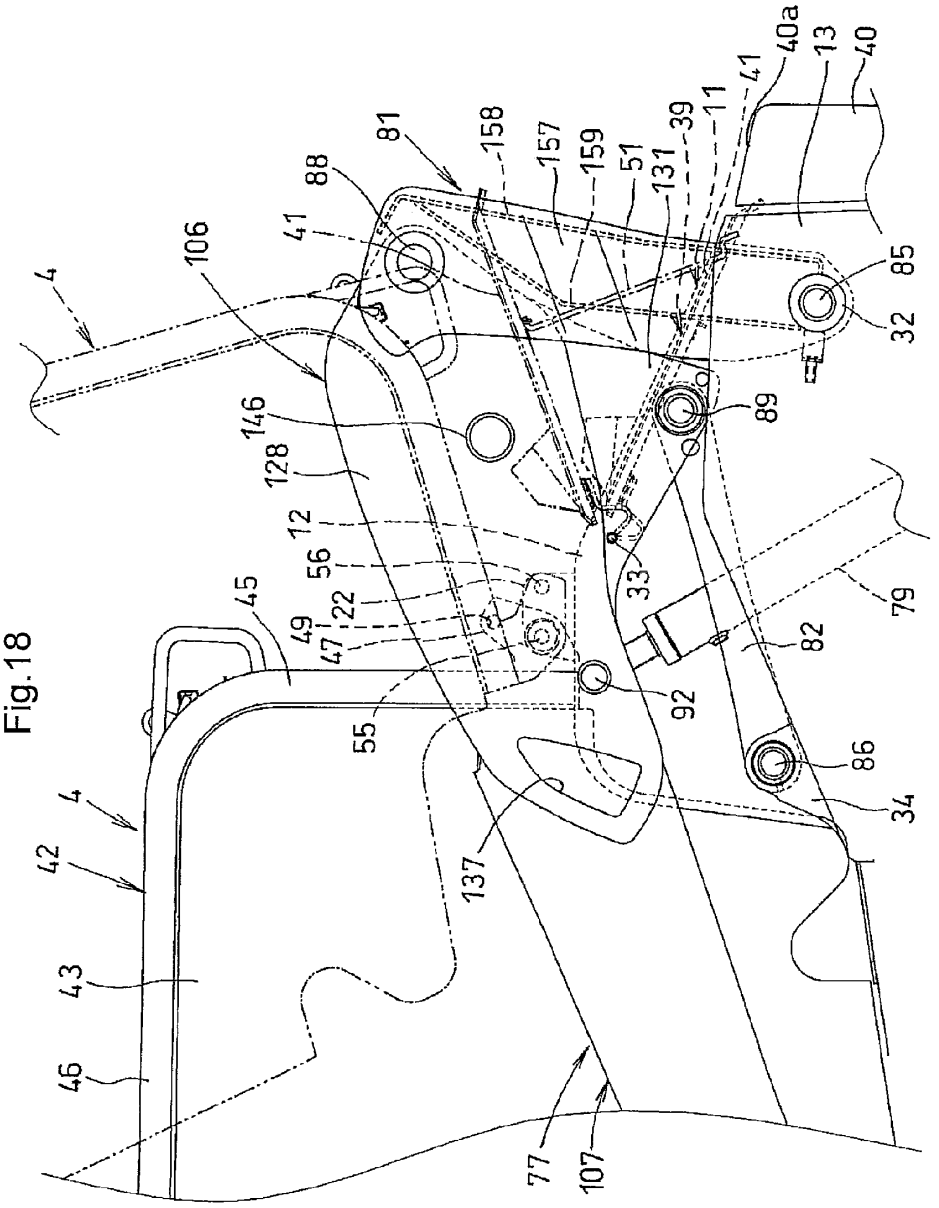
4
106
41
88
81
158
157
159
51
131
39
11
41
40a
13
40
85
32
89
146
128
12
56
22
47
49
45
33
79
82
92
55
86
34
137
4
42
43
46
77
107

Fig.18

Fig.19

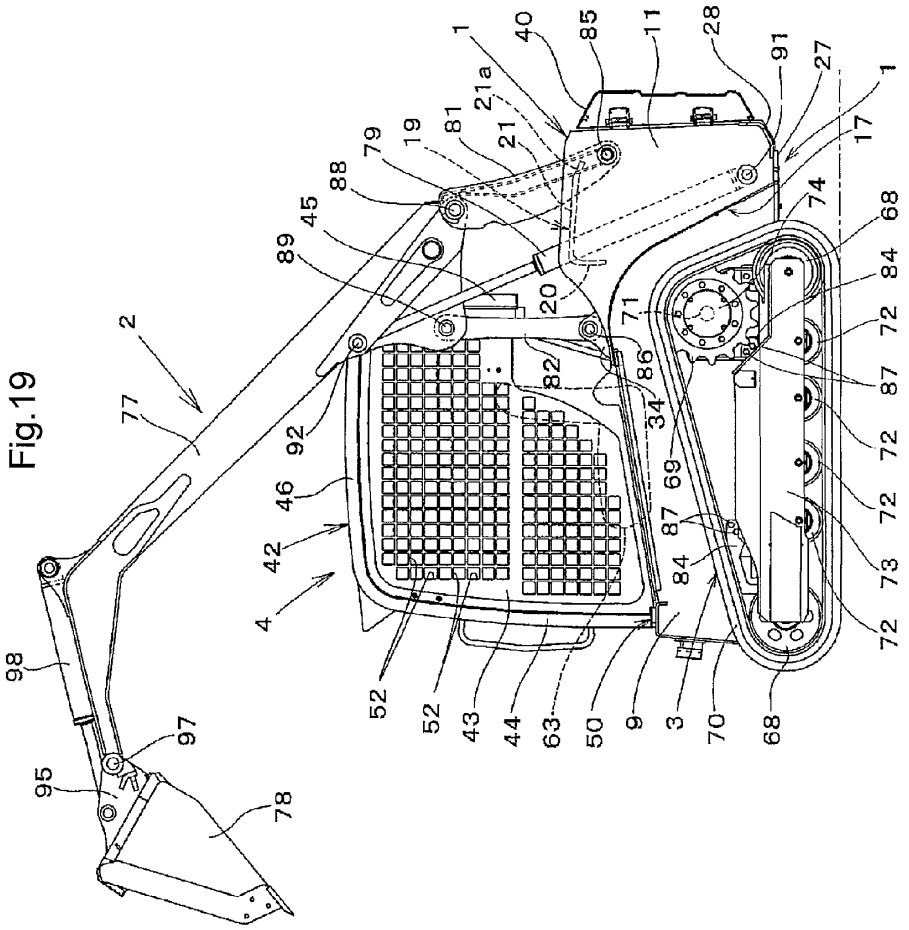
1
40
85
11
28
91
27
1
17
74
68
84
72
87
72
72
73
72
68
70
3
9
50
63
44
43
52
52
4
42
46
92
34
69
87
84
86
82
71
20
89
45
88
79
19
81
21
21a
2
77
98
97
95
78

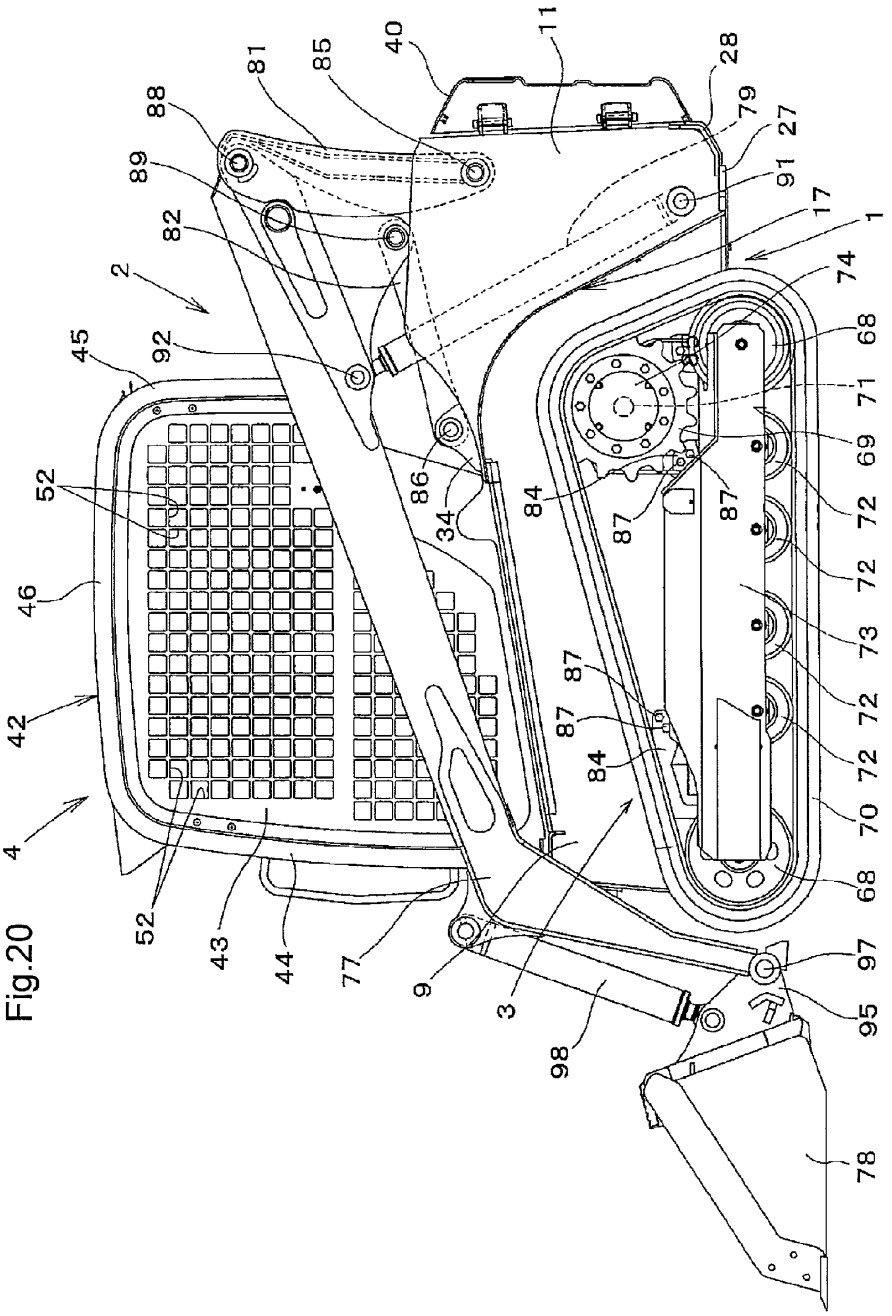
1
2
3
4
9
11
17
27
28
34
40
42
43
44
45
46
52
52
68
68
69
70
71
72
72
72
72
73
74
77
78
79
81
82
84
84
85
86
87
87
87
88
89
91
92
95
97
98

Fig.20

Fig.21

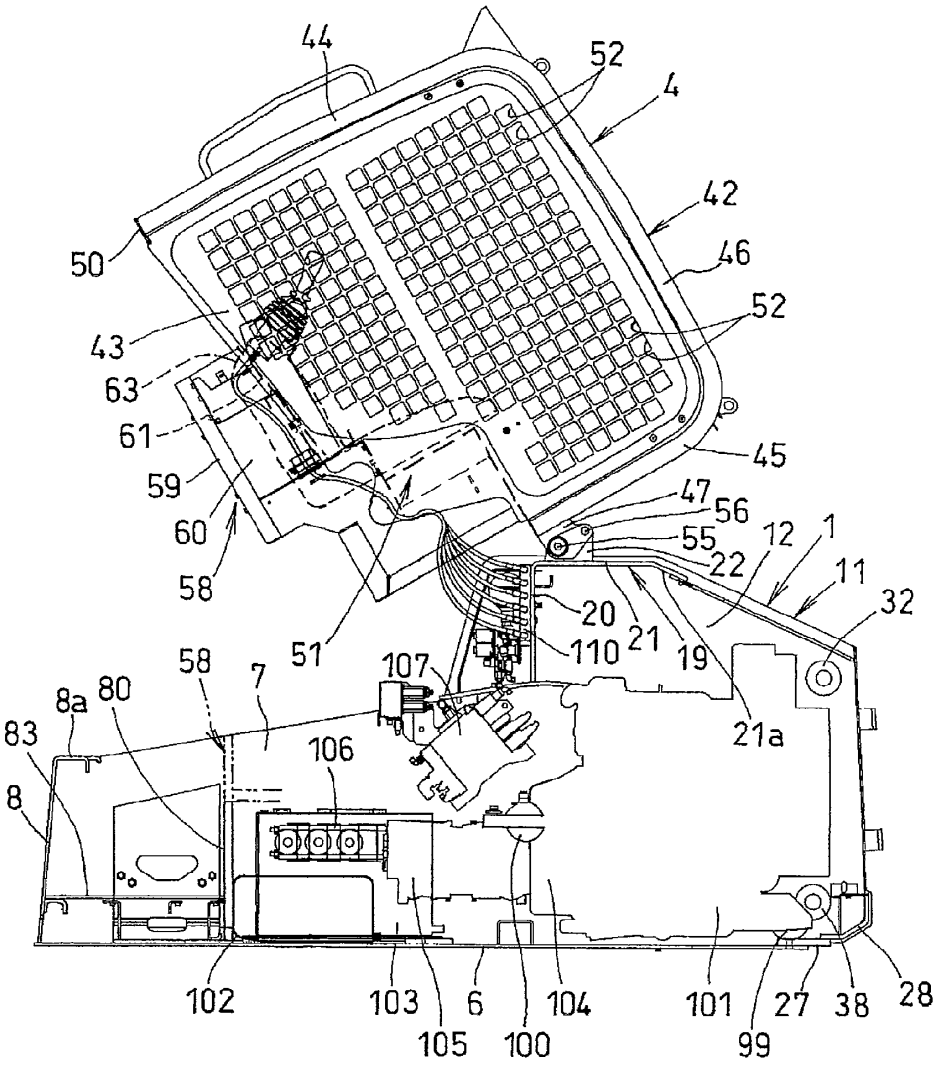
44
52
4
42
46
50
52
43
63
61
45
59
47
56
60
55
12
1
22
11
58
20
32
51
110
21
19
107
58
7
8a
80
21a
83
106
8
102
103
6
104
101
27
38
28
105
100
99

Fig.22

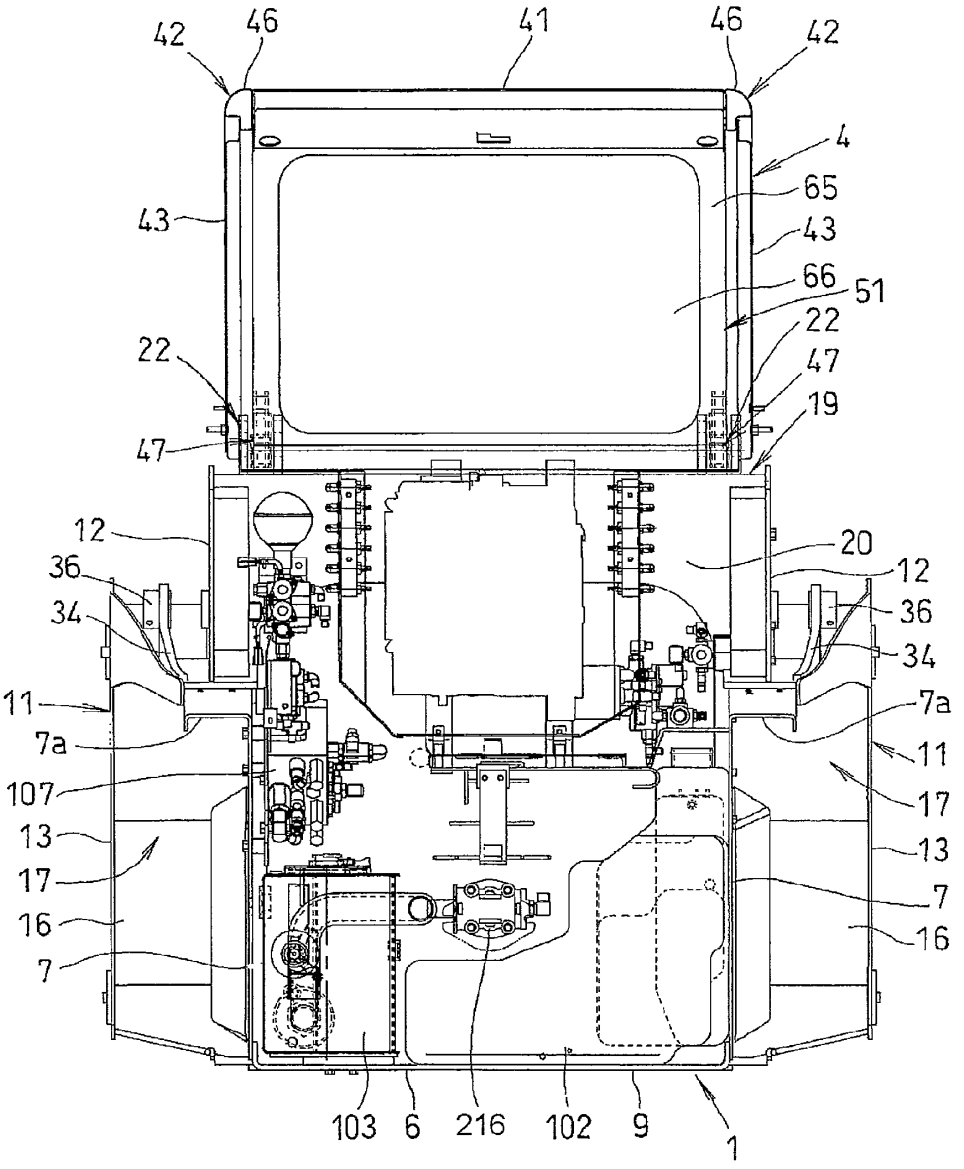
42
46
41
46
42
4
65
43
43
66
51
22
22
47
47
19
12
20
12
36
36
34
34
11
7a
7a
11
107
17
13
13
17
7
16
16
7
103
6
216
102
9
1

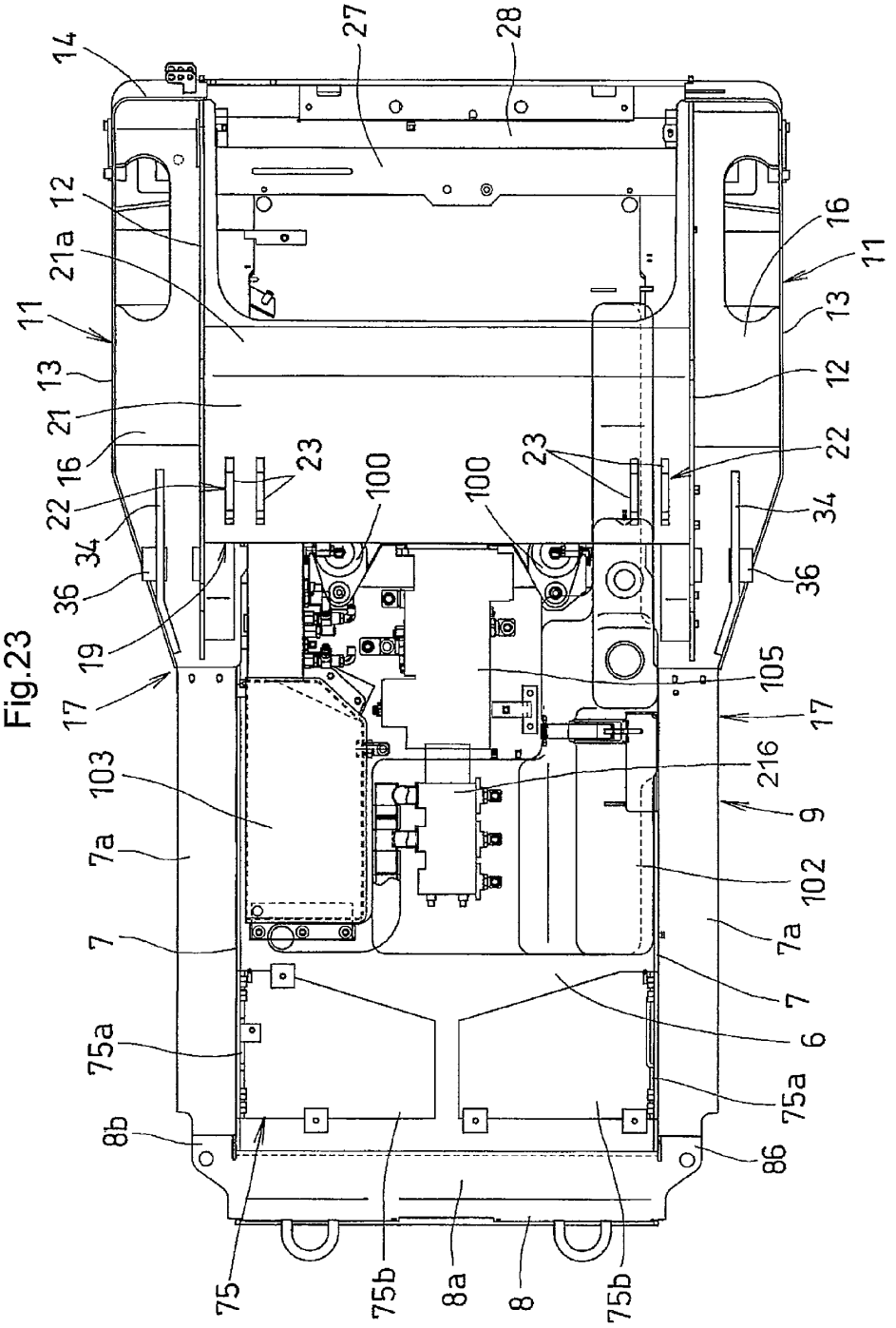
14
12
21a
11
13
21
16
22
34
36
19
17
103
7a
7
75a
8b
75
75b
8a
8
75b
86
75a
6
7
7a
102
9
216
17
105
36
34
22
12
13
11
16
23
100
100
23

Fig.23

Fig.24

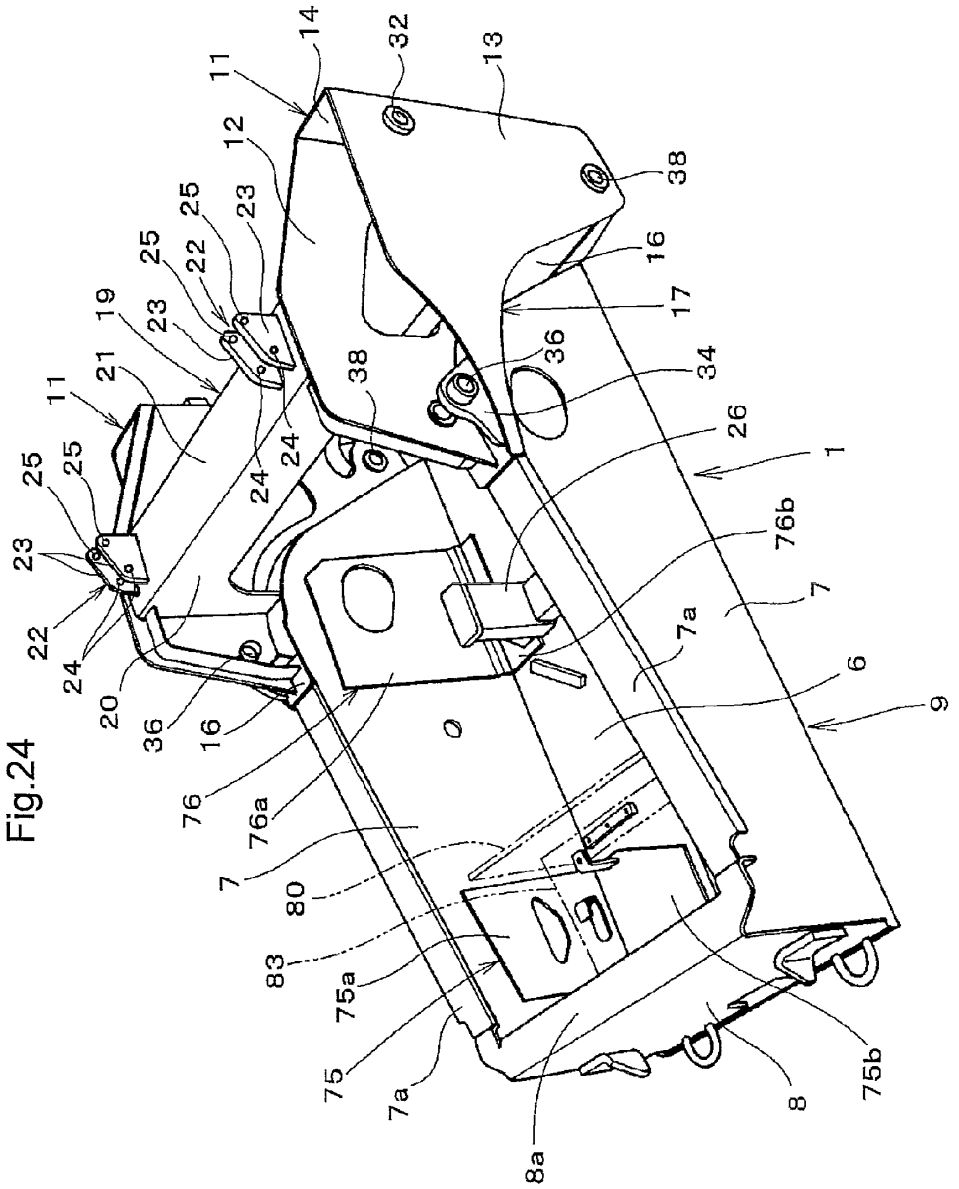
14
32
13
11
12
38
25
23
25
22
16
19
23
17
21
36
34
11
38
26
25
25
24
24
1
23
76b
22
7
24
7a
20
6
36
16
9
76
76a
7
80
83
75a
75
7a
8a
8
75b

LOADER WORK MACHINE

TECHNICAL FIELD

The present invention relates to a loader work machine.

BACKGROUND ART

Conventionally, in a loader work machine, a pair of, right/left arms are provided on right/left sides of a body frame. A working implement is attached to tip end portions of the right/left arms, and hydraulic actuators are provided for actuating the working implement. Base portions of a pair of the right/left arms are supported on a rear portion of the body frame, swingably in a vertical direction by a rear pair of right/left first lift links and a forward pair of right/left second lift links so that the tip end portions of the right/left arms are lifted and lowered frontward of the body frame (see Patent Documents 1 and 2, for example).

In the conventional loader work machine of this type, a hydraulic pipe arrangement connected to the hydraulic actuators extends from a body frame side to an arm side. The hydraulic pipe arrangement includes hydraulic hoses or the like, and in general each hose is disposed on an internal side in a transverse direction of each of right/left first lift links, in an exposed manner.

Patent Document 1: U.S. Pat. No. 6,205,665 B1

Patent Document 2: U.S. Pat. No. 6,098,739

DISCLOSURE OF THE INVENTION

In the conventional technique, a large portion of the hydraulic pipe arrangement connected to the hydraulic actuators for actuating the working implement on the arm tip end side is exposed outside, and thus problems arise that the hydraulic pipe arrangement, such as a hydraulic hose arrangement, is likely to be damaged, and the presence of the hydraulic pipe arrangement deteriorates an appearance of a rear portion of the loader work machine. In addition, nothing restricts the movement of the hydraulic pipe arrangement, and thus numerous clamps are required for fixing the hydraulic pipe arrangement.

In view of the above, an object of the present invention is to provide a loader work machine, in which the hydraulic pipe arrangement disposed from the body frame side to the arm side is not likely to be damaged, the appearance of the rear portion of the loader work machine is prevented from being deteriorated which may otherwise be caused by exposed hydraulic pipe arrangement, and the number of clamps required for fixing the hydraulic pipe arrangement can be reduced.

The above object is fulfilled by a first aspect of a loader work machine according to the present invention as under:—

A loader work machine comprising:

a body frame including a frame main body having a bottom wall, a pair of right/left side walls and a front wall; and a pair of right/left support frame provided on rear end portions of the frame main body, each of the support frame having an inner wall and an outer wall;

a cabin mounted on the body frame;

a pair of right/left traveling devices supporting the body frame;

a pair of right/left arms disposed on right/left lateral sides of the body frame and cabin;

a working implement attached between tip end portions of the right/left arms;

hydraulic actuators provided on the tip end portions of the right/left arms and configured to actuate the working implement;

a pair of right/left first lift links provided at rear portions of the body frame for supporting base portions of the respective arms swingably in a vertical direction, each of the lift links including a link outer wall, a link inner wall, a link connection wall connecting the link outer wall and link inner wall, and an arm support portion provided at an upper free end portion thereof by opening a front side thereof between the link inner wall and the link outer wall;

a pair of right/left second lift links provided at rear portions of the body frame more frontward than the first lift links for supporting the base portions of the respective arms swingably in the vertical direction;

a pair of right/left arm cylinders extending between the base portions of the respective arms and the rear portions of the body frame for lifting and lowering the respective arms;

a first link shaft provided between the inner wall and outer wall of the support frame associated therewith for pivotally supporting a lower base portion of the first lift link associated therewith: and

a first arm shaft pivotally supporting the base portion of the arm associated therewith and received by the arm support portion,

wherein a tip end side of the arm is lifted and lowered frontward of the body frame,

wherein the base portion of the arm is supported by the arm support portion at a position adjacent the link outer wall in a transverse direction, to form a hose accommodation space by the link inner wall and an internal side face of the base portion of the arm, and

wherein a hydraulic pipe arrangement extends toward the arm to be connected to the hydraulic actuator, the hydraulic pipe arrangement extending through from inside to outside of the inner wall and running frontward of the first arm shaft and first link shaft to be disposed in the hose accommodation space.

According to this configuration, the base portion of the right/left arms is supported by the arm support portion of the right/left first lift link at a position adjacent the link outer wall in a transverse direction, so that a hose accommodation space is formed between the link inner wall of the first lift link and the internal side face of the base portion of the arm. The hydraulic pipe arrangement runs frontward of the first arm shaft and the first link shaft, and is disposed in the hose accommodation space. Therefore, the hydraulic pipe arrangement can be protected between the link outer wall and the link inner wall. As a result, a portion of the hydraulic pipe arrangement exposed outside is reduced, and the hydraulic pipe arrangement disposed from the body frame side to the arm side is not likely to be damaged. In addition, since the hydraulic pipe arrangement is covered between link outer wall and link inner wall, the appearance of the rear portion of the loader work machine can be prevented from being deteriorated, which may otherwise be caused by the hydraulic pipe arrangement. Further, since the movement of the hydraulic pipe arrangement can be restricted between the link outer wall and the link inner wall, a number of the clamps for fixing the hydraulic pipe arrangement can be reduced. Since the hose accommodation space is provided, interference or friction between the hydraulic pipe arrangement and the base portion of the arm can be prevented, and the hydraulic pipe arrangement can be easily and securely disposed in a vertical direction in the first lift link.

In a second aspect of the loader work machine according to the present invention, an upper portion of the hydraulic pipe

arrangement is disposed along an inner face of the link inner wall, and extends along the internal side face of the arm from an upper end of the first lift link.

In a third aspect of the loader work machine according to the present invention, the upper free end portion of the first lift link is made wider in the transverse direction so as to bulge laterally outward of the lower base portion of the first lift link, and the base portion of the arm is disposed offset laterally outward from a base portion of the first lift link.

In a fourth aspect of the loader work machine according to the present invention,

at least the upper portion of the hydraulic pipe arrangement is formed of a flexible hydraulic hose portion,

a front projection is provided at an upper end portion of the link inner wall and protrudes frontward therefrom for restricting lateral sway of the hydraulic hose portion, and

a clamp is provided on the inner face of the link inner wall forming the hose accommodation space, the clamp being configured to fix the hydraulic hose portion.

In a fifth aspect of the loader work machine according to the present invention, the inner wall and the outer wall are disposed laterally outward of the side wall associated therewith.

In a sixth aspect of the loader work machine according to the present invention,

the loader work machine further comprises a pair of right/left mounting plates, each of the mounting plates including an inner side portion fixed to a rear upper end of the side wall associated therewith, and an outer side portion protruding laterally outward from the side wall;

wherein a front lower end of the inner wall and a front lower end of the outer wall are fixed to an upper face of the outer side portion of the mounting plate.

In a seventh aspect of the loader work machine according to the present invention, a transverse width of the cabin is larger than a spacing distance between the right/left side walls.

In an eighth aspect of the loader work machine according to the present invention,

an intermediate portion on a front end side of the arm is bent inward in the transverse direction so that a transverse width between front end portions of the right/left arms becomes smaller than a transverse width between rear portions of the right/left arms, and

a whole length of the arm is disposed inward of an outer end and outward of an inner end of the traveling device associated therewith.

In a ninth aspect of the loader work machine according to the present invention,

each of the right/left side wall has a bent rim portion provided at an upper end thereof, the bent rim portion protruding laterally outward, the rear upper end of the side wall being gradually inclined downward as it extends rearward;

a front end portion of the mounting plate is fixed to a rear end portion of the bent rim portion, and the mounting plate is attached to the rear upper end of the side wall so that the mounting plate and the side wall form a T-shape or L-shape, and

the outer side portion of the mounting plate protrudes laterally outward from the upper end of the side wall so that the bent rim portion of the side wall and the mounting plate form a fender for covering an upper side and a rear side of the traveling device associated therewith.

In a tenth aspect of the loader work machine according to the present invention,

the front wall has a bent rim portion at an upper end thereof, the bent rim portion protruding rearward, right/left connecting pieces extending laterally outward from opposite lateral sides of the bent rim portion, and

each of the right/left connecting pieces is fixed to a front end of the bent rim portion of the side wall associated therewith.

In an eleventh aspect of the loader work machine according to the present invention,

the loader work machine further comprises a transversal connecting member connecting upper portions of the right/left inner walls,

wherein the transversal connecting member includes a front wall plate, and an upper wall plate protruding rearward from an upper end of the front wall plate, a rear portion of the upper wall plate being inclined downward and rearward.

In a twelfth aspect of the loader work machine according to the present invention, the loader work machine further comprises:

a connection reinforcing plate which is fixed to a rear end portion of the bottom wall along a rear end of the bottom wall and connected and fixed to lower ends of the right/left support frames; and

a lower connection plate which is fixed to a rear end portion of the connection reinforcing plate along a rear end of the connection reinforcing plate and connected and fixed to the lower ends of the right/left support frames.

In a thirteenth aspect of the loader work machine according to the present invention, each of the right/left traveling devices includes a track frame which is a component separate from the body frame and is fixed to the side wall associated therewith.

In a fourteenth aspect of the loader work machine according to the present invention, each of the right/left reinforcing plates is fixed to an inner face of the side wall associated therewith at a position corresponding to a position for fixing the track frame.

In a fifteenth aspect of the loader work machine according to the present invention,

each of the right/left reinforcing plates includes a standing wall overlapping with the inner face of the side wall and a lower wall overlapping with an upper face of the bottom wall, the standing wall and the lower wall together forming an L-shape, and

the lower walls of the right/left reinforcing plates are spaced apart in the transverse direction.

In a sixteenth aspect of the loader work machine according to the present invention,

a front end portion and a rear end portion of the track frame are fixed to an outer face of the side wall, and

a front reinforcing plate and a rear reinforcing plate are fixed to the inner face of the side wall at positions corresponding to positions of the front end portion and rear end portion of the fixed track frame, respectively.

In a seventeenth aspect of the loader work machine according to the present invention,

the cabin includes a pair of right/left side wall bodies, a back wall body closing a back side of the cabin and a bottom wall body connecting lower end portions of the right/left side wall bodies,

the cabin is swingably supported on the body frame so as to be switchable between a mount state in which a bottom side of the cabin is placed on the body frame, and a tilted state in which the bottom side of the cabin is spaced apart upward from the body frame,

a partition plate is provided for separating the frame main body into a front portion and a rear portion of the body frame, and a driver's seat is provided on the bottom wall body frontward of the back wall body, and

when the cabin is brought to the mount state, the bottom wall body comes into contact with an upper side of the partition plate, portions frontward of the back wall body and the front portion of the body frame are shielded from the rear portion of the body frame on which an engine is mounted, by the partition plate, bottom wall body and back wall body.

Also, the above object is fulfilled by a first aspect of a method of manufacturing a loader work machine according to the present invention as under:—

A method of manufacturing a loader work machine, the loader work machine comprising: a body frame mounting a cabin thereon; a pair of right/left arms having base portions thereof supported swingably in a vertical direction at a rear portion of the body frame so that tip ends of the right/left arms may be lifted and lowered frontward of the body frame; and a pair of right/left arm cylinders each disposed between the base portion of the associated arm and the rear portion of the body frame for lifting and lowering the arm, the method comprising the steps of:

forming a frame main body of the body frame having a bottom wall, a pair of right/left side walls and a front wall;

forming a pair of right/left support frames each having an inner wall, an outer wall and a frame connecting wall connecting the inner wall and the outer wall;

fixing by welding a mounting plate to a rear upper end of each of the side walls, and fixing by welding a front lower end of the inner wall and a front lower end of the outer wall to an upper face of the mounting plate, to connect and fix the right/left support frames to a rear end side of the frame main body and form the body frame,

supporting the base portions of the arms swingably in the vertical direction by the respective support frames, and

connecting lower base portions of the arm cylinders swingably to the respective support frames.

In a second aspect of the method of manufacturing a loader work machine according to the present invention, the method further comprises the steps of:

providing each of the right/left side walls with a bent rim portion at an upper end thereof, the bent rim portion protruding laterally outward, the rear upper end of the side wall being gradually inclined downward as it extends rearward;

overlapping and fixing by welding a front end portion of the mounting plate with a rear end portion of the bent rim portion of the side wall associated therewith, and fixing by welding the mounting plate to the rear upper end of the side wall so that the mounting plate and the side wall form a T-shape or L-shape; and

protruding an outer side portion of the mounting plate laterally outward of the upper end of the side wall so that the bent rim portion of the side wall and the mounting plate form a fender for covering an upper side and a rear side of a right/left traveling device.

In a third aspect of the method of manufacturing a loader work machine according to the present invention, the method further comprises the steps of:

providing the front wall with a further bent rim portion at an upper end thereof, the further bent rim portion protruding rearward and having right/left connecting pieces extending laterally outward on opposite lateral sides thereof; and

welding each of the right/left connecting pieces to a front end of the bent rim portion of the side wall associated therewith.

In a fourth aspect of the method of manufacturing a loader work machine according to the present invention, the method further comprises the steps of:

fixing by welding a connection reinforcing plate to a rear end portion of the bottom wall along a rear end of the bottom wall, and connecting and fixing by welding the connection reinforcing plate to lower ends of the right/left support frames; and

fixing by welding a lower connection plate to a rear end portion of the connection reinforcing plate along a rear end of the connection reinforcing plate, and connecting and fixing by welding the lower connection plate to the lower ends of the right/left support frames.

In a fifth aspect of the method of manufacturing a loader work machine according to the present invention, the method further comprises the steps of:

providing a track frame of each of the right/left traveling devices separately from the body frame, and

fixing the track frame to the side wall associated therewith by a fastener such as a bolt.

In a sixth aspect of the method of manufacturing a loader work machine according to the present invention, the method further comprises the step of:

providing a track frame of each of the right/left traveling devices separately from the body frame, and

fixing the track frame to the side wall associated therewith by welding.

In a seventh aspect of the method of manufacturing a loader work machine according to the present invention, the method further comprises the step of:

overlapping and fixing by welding each of right/left reinforcing plates to an inner face of the corresponding side wall at a position corresponding to a position for fixing the track frame.

BRIEF DESCRIPTION OF THE DRAWINGS

FIG. **1** is a side view of a loader work machine according to the present invention when an arm is lifted;

FIG. **2** is a side view of the loader work machine when the arm is lowered;

FIG. **3** is a perspective view of a body frame seen from above and a front side;

FIG. **4** is a perspective view of the body frame seen from a rear side;

FIG. **5** is a side view in vertical section of the body frame;

FIG. **6** is a plan view of the body frame;

FIG. **7** is a rear view of the body frame;

FIG. **8** is a plan view showing a positional relationship of the body frame, a cabin and the arm;

FIG. **9** is a plan view of the arm;

FIG. **10** is a side view of the arm;

FIG. **11** is a rear view of a first lift link and the arm when the arm is lifted;

FIG. **12** is a side view in the vicinity of a hydraulic pipe arrangement;

FIG. **13** is a rear view in the vicinity of the hydraulic pipe arrangement;

FIG. **14** is a plan view of portions of a support frame, the first lift link and the arm;

FIG. **15** is a view in section taken along a line A-A in FIG. **12**;

FIG. **16** is a view in section taken along a line B-B in FIG. **12**;

FIG. **17** is a perspective view of portions of the first lift link and the arm;

FIG. **18** is a side view from a hood to a rear portion of the aim;

FIG. **19** is a side view of a loader work machine according to another embodiment with an arm lifted;

FIG. **20** is a side view of the loader work machine according to another embodiment with the arm lowered;

FIG. **21** is a side view in vertical section of the loader work machine according to another embodiment;

FIG. **22** is a front view in vertical section of the loader work machine according to another embodiment;

FIG. **23** is a plan view of the loader work machine according to another embodiment; and

FIG. **24** is a perspective view of a body frame according to another embodiment seen from above and a front side.

BEST MODE FOR CARRYING OUT THE INVENTION

(Entire Configuration)

An embodiment of a loader work machine to which the present invention is applied will be described hereinafter with reference to the drawings.

Referring to FIGS. **1** and **2**, a truck loader, an example of a loader work machine according to the present invention, includes: a body frame **1**; a loader working device (excavator working device) **2** attached to the body frame **1**; and a pair of right/left traveling devices **3** configured to support the body frame **1**. A driving part **5** is provided above the body frame **1**, with a driver's seat **63** which will be described later, control levers etc. mounted thereon. On a front portion of the body frame **1**, a cabin (driver protector) **4** surrounding the driving part **5** is mounted. The loader working device **2** includes a pair of right/left arms **77** and a bucket (working implement) **78** attached between tip end portions of the arms **77**.

A pair of the right/left arms **77** are disposed on both lateral sides of the body frame **1**, the driving part **5** or the cabin **4**. Each of the right/left arms **77** has a base portion thereof supported on a rear upper portion of the body frame **1**, swingably in a vertical direction through a first, rear lift link **81** and a second, front lift link **82**; and a tip end side thereof lifted and lowered frontward of the body frame **1**. Between the base portions of the pair of the right/left arms **77** and a rear lower portion of the body frame **1**, a pair of right/left arm cylinders **79**, each comprised of a double-acting hydraulic cylinder, are provided.

(Configuration of Frame and Hood)

Referring to FIGS. **3-7**, the body frame **1** formed of iron plate or the like includes a frame main body **9** and a pair of right/left support frames **11**. A pair of the right/left support frames **11** are connected by welding to a rear end side of the frame main body **9**. The frame main body **9** is formed in a box shape with an upper side thereof opened, and includes a bottom wall **6**, a pair of right/left side walls **7** and a front wall **8**. An upper rim of a rear end portion of each of the right/left side walls **7** has an arc shape which is gradually inclined downward and rearward. On an upper end of each of the right/left side walls **7**, a bent rim portion **7***a* protruding laterally outward is provided. On an upper end of the front wall **8**, a bent rim portion **8***a* protruding rearward is provided. On each of lateral sides of the bent rim portion **8***a*, a connecting piece **8***b* extends rearward. The connecting piece **8***b* is welded to a front end of the corresponding bent rim portion **7***a*.

Each of the support frames **11** includes an inner wall **12**, an outer wall **13** and a frame connecting wall **14** interconnecting a rear end of the inner wall **12** and a rear end of the outer wall **13**; and has a squared C-shape as a whole.

A mounting plate **16** curved in an arc shape is disposed on the rear end portion of the side wall **7** in such a manner that the mounting plate **16** and the side wall **7** are arranged in a T-shape or L-shape, and an inner side portion of the mounting plate **16** is welded to the side wall **7**. A rear end portion of the bent rim portion **7***a* is overlapped with and welded to a front end portion the mounting plate **16**. An outer side portion of the mounting plate **16** protrudes outward in the transversal direction from the upper end of the side wall **7**. The bent rim portion **7***a* and the mounting plate **16** constitute a fender **17** configured to cover an upper side and a rear side of the traveling device **3**.

The inner wall **12** and the outer wall **13** is disposed laterally outward of the side wall **7** of the frame main body **9**, and a front lower end of each of the inner wall **12** and the outer wall **13** is welded to an upper face of the outer side portion of the mounting plate **16**. With this configuration, each of the right/left support frames **11** is connected and fixed to the side wall **7** of the body frame **1** through the mounting plate **16**. An upper portion of each of the inner wall **12**, the outer wall **13** and the frame connecting wall **14** of the support frame **11** protrudes above the side wall **7**. In this manner, while ensuring adequate stiffness of the body frame **1**, spacing distances between a pair of the right/left support frames **11**, between a pair of the right/left first lift links **81** and between a pair of the right/left arms **77** can be made larger than a transverse width of the frame main body **9**. Accordingly, a transverse width of the cabin **4** (which will be described later) is adequately secured, enhancing comfort of the cabin **4**.

The upper portions of the inner walls **12** of the right/left support frames **11***a* are connected to each other through a transversal connecting member **19**. The transversal connecting member **19** includes: a gate-shaped front wall plate **20**; and an upper wall plate **21** protruding rearward from an upper end of the front wall plate **20**. A rear portion **21***a* of the upper wall plate **21** is inclined downward and rearward. On both lateral end portions of the upper wall plate **21**, a pair of right/left support brackets **22** each having a U-shape protruding upward are provided. Each of the right/left support brackets **22** has a pair of right/left support plate portions **23**, and each of the support plate portions **23** has a mounting hole **24** on a front side and a locking hole **25** on a rear side, both penetrating in a transverse direction.

In an intermediate portion of a rear portion of the bottom wall **6** of the frame main body **9**, a pair of right/left support bases **26** protruding upward are provided. On a rear end portion of the frame main body **9**, an elongated bottom member **28** extends along a rear end of the bottom wall **6**. The elongated bottom member **28** is connected and welded to the pair of the right/left support frames **11**, and is welded to a rear end portion of the bottom wall **6** of the frame main body **9**. In other words, lower ends of the right/left support frames **11** are connected to each other through the elongated bottom member **28**. The elongated bottom member **28** is connected and welded to the bottom wall **6** of the body frame **1**, both end portions of the elongated bottom member **28** are welded to the respective inner walls **12** or the frame connecting walls **14**, and a pair of the right/left support frames **11** are connected to the bottom wall **6** through the elongated bottom member **28**. The elongated bottom member **28** includes: an elongated bottom wall portion **28***a* on which a rear portion of an engine **101** (which will be described later) is mountable; and a standing rear wall portion **28***b* vertically arranged on a rear end of the elongated bottom wall portion **28***a*.

In an upper rear end portion of the support frame **11**, a first mounting boss **32** having a mounting hole is provided between the inner wall **12** and the outer wall **13**. On an upper front end portion of the outer wall **13**, a stay member **34** protruding rearward and upward is provided. A front end portion and a lower end of the stay member **34** are fixed to the outer wall **13** and the mounting plate **16** by welding or the like. Between the stay member **34** and the inner wall **12**, a second mounting boss **36** having a mounting hole is provided. In a lower end portion of the support frame **11**, a third mount-

ing boss **38** having a mounting hole is provided between the inner wall **12** and the outer wall **13**.

As shown in FIGS. **5-8**, on a rear side above the bottom wall **6** of the body frame **1**, the engine **101** is provided. Specifically, the engine **101** is mounted on the bottom wall **6**, the right/left side walls **7** covers lateral sides of the engine **101**, and the transversal connecting member **19** connects upper portions of the support frames **11** above an intermediate portion in a front-rear direction of the engine **101**. A central portion in the transverse direction on a rear side of the engine **101** is set on and fixed to the elongated bottom member **28** through an anti-vibration member **99**, and right/left portions on a front side of the engine **101** are set on and fixed to the right/left support bases **26**, respectively, through corresponding anti-vibration member **100**.

As shown in FIGS. **5-8**, on the rear side above the bottom wall **6** of the body frame **1**, the engine **101** is provided. Frontward of the engine **101**, a running hydraulic controller **215** is provided, and frontward of the running hydraulic controller **215**, a triple gear pump **216** is provided. On an intermediate portion in the front-rear direction of the side wall **7** on a right side, a work control valve (hydraulic controller) **217** is provided.

By inputting a power of the engine **101** through the running hydraulic controller **215**, the gear pump **216** performs feeding and discharging of operating oil in an operating oil tank to and from the arm cylinders **79** and a hydraulic actuator **98** for working implement (a dump/tilt actuator **98***a* and a movable part actuator **98***b*) (which will be described later), through the work control valve **217**. The work control valve **217** drives and controls the arm cylinders **79** and the hydraulic actuator **98** for working implement (the dump/tilt actuator **98***a* and the movable part actuator **98***b*) (which will be described later), to thereby actuate the arms **77** and the working implement **78**.

In FIGS. **1-7**, the transversal connecting member **19** is disposed rearward of the cabin **4** which will be described later. An engine room for housing the engine **101** is located on a rear portion side of the frame main body **9** and below the transversal connecting member **19**. A hood **39** for covering the engine room is disposed on a rear end portion of the body frame **1**, and includes an upper hood cover **41** and a rear hood cover **40**.

The upper wall plate **21** is disposed below a central portion in the vertical direction of the cabin **4**, and the rear portion **21***a* of the upper wall plate **21** is inclined downward and rearward. Rearward of the upper wall plate **21**, the upper hood cover **41** is provided so as to close rear upper portion side between a pair of the right/left support frames **11**. A front end portion of the upper hood cover **41** is connected to the rear portion **21***a* of the upper wall plate **21** of the transversal connecting member **19**. The upper hood cover **41** is inclined downward and rearward, so as to correspond to the rear portion **21***a* of the upper wall plate **21**.

Therefore, as compared with a height of the cabin **4**, a height of the entire hood **39** disposed rearward of the cabin **4** can be suppressed low, and thus the hood **39** is not likely to hinder a rear view. During a working operation or the like, the operator in the cabin **4** can visually check an area rearward and downward of the hood **39**, facilitating a smooth working operation of the loader work machine.

As shown in FIG. **1**, a height hl from a lower end of the body frame **1** to a rear end of the upper hood cover **41** is set to one half or less of a height H**1** from the lower end of the body frame **1** to an upper end of the cabin **4**. When the height hl is suppressed low as compared with the height H**1** as such, the operator in the cabin **4** can visually check an area rearward and downward of a rear end of the upper hood cover **41**, further facilitating a smooth working operation.

The upper wall plate **21** is disposed above a sitting portion **63***a* of the driver's seat **63** which will be described later, and at the same time, below an upper end of a backrest portion **63***b* of the driver's seat **63**. The operator in the cabin **4** who is seating on the driver's seat **63** can visually check an area rearward and downward of the upper wall plate **21** of the transversal connecting member **19**, from above the backrest portion **63***b*, and thus a smooth working operation is facilitated.

As shown in FIG. **18**, the upper hood cover **41** for closing an upper portion of the hood **39** is supported swingably in the vertical direction about a transverse shaft **33** with a front end side of the upper hood cover **41** as fulcrum. The upper hood cover **41** is configured to be freely opened and closed between a close position in which the upper hood cover **41** closes an upper portion side of the engine room as indicated with a broken line in FIG. **18**, and an open position in which the upper hood cover **41** is inclined upward and rearward to open the upper portion side of the engine room, as indicated with a chain line in FIG. **18**. In the hood **39**, a retaining member **51** is provided which is configured to retain the upper hood cover **41** in the open position.

As shown in FIGS. **1**, **2** and **18**, the rear hood cover **40** is disposed on a rear end of the support frame **11** and is configured to be freely opened and closed so as to close an opening between rear end of the upper hood cover **41** and the standing rear wall portion **28***b* (rear end opening between a pair of the right/left support frames **11**). An upper wall portion **40***a* of the rear hood cover **40** is inclined downward and rearward, so as to correspond to the upper hood cover **41**. Therefore, the upper wall portion **40***a* of the rear hood cover **40** does not hinder a rear view, to thereby enhance the rear view.

(Configuration of Cabin)

As shown in FIGS. **1-7** and **18**, the cabin **4** serving as the driver protector includes: a pair of right/left side frame members **42**; a roof member configured to bridge upper portions of the side frame members **42**; and a pair of right/left side wall bodies **43** provided on a pair of the right/left side frame members **42**, respectively. A rear side of the cabin **4** is closed with a rear glass or the like, and a central portion in the front-rear direction on a lower side is closed with a bottom wall body **58** (which will be described later), and thus the cabin **4** is formed in a box shape with a front side opened. The right/left side frame members **42** are formed of pope member or the like, and include: a pair of right/left front support pole portions **44**; a pair of right/left rear support pole portion **45**; and a pair of right/left upper horizontal beam portions **46** each configured to connect an upper end of the front support pole portions **44** and the corresponding upper end of the rear support pole portion **45**. A setting plate **50** is welded to a lower end portion of the right/left front support pole portions **44**.

On lower end portions of the right/left rear support pole portions **45**, a pair of right/left mounting brackets **47** protruding rearward are provided, respectively. The mounting bracket **47** corresponds to a support bracket **22**, and a mounting hole and a locking hole **49** are provided so as to corresponds to the mounting hole **24** and the locking hole **25** of the support bracket **22**, respectively.

The side wall body **43** is formed of metal plate or the like, and is fixed to each of the side frame members **42** by welding or the like. Each side wall body **43** is provided with numerous openings **52** for giving a view of the outside laterally from inside the cabin **4**, and thus through the openings **52**, the arm **77** or the loader working device **2** disposed laterally outward can be visually checked.

In order to mount the cabin **4** at a position frontward of the transversal connecting member **19**, a cabin mount portion is provided which allows the cabin **4** to be mounted frontward of the transversal connecting member **19**. The cabin mount portion includes the bent rim portion **8***a* of the front wall **8**, the bent rim portion **7***a* of the side wall **7** and so on. The transversal connecting member **19** is positioned below the central portion in the vertical direction of the cabin **4**, and an upper portion of the transversal connecting member **19** is provided with a support shaft **55** as a fulcrum for swingably lifting the cabin **4** rearward and upward.

The support shaft **55** extending in the transverse direction is inserted into and supported by the mounting holes **24** of the support brackets **22** and the mounting holes of the mounting brackets **47**. The cabin **4** is supported swingably about the support shaft **55**, on the support bracket **22** of the body frame **1** through the mounting bracket **47**. With this configuration, the cabin **4** is switchable between a mount state in which a bottom side of the cabin **4** is set on the body frame **1** so as to close an upper end opening of the body frame **1** and a tilted state in which the bottom side of the cabin **4** is spaced apart upward from the body frame **1** so as to open the upper end opening of the body frame **1**. As indicated with a solid line in FIG. **18**, when the cabin **4** is swung frontward about the support shaft **55**, the setting **50** comes into contact with and is held on an upper rim portion **8***a* of the front wall **8** through a buffer material or the like, to thereby retain the cabin **4** in the mount state. On the other hand, as indicated with a chain line in FIG. **18**, when the cabin **4** is swung and tilted rearward about the support shaft **55**, the locking holes **49** of a pair of the mounting brackets **47** and the respective locking holes **25** of a pair of the support brackets **22** are aligned. By inserting a locking pin **56** into the locking holes **25** and the locking hole **49**, the tilted state can be retained in which the cabin **4** has been swung rearward.

In this manner, the cabin **4** is supported swingably on the body frame **1**. When the cabin **4** is in the mount state, a running operation of the truck loader or a working operation of the loader working device **2** can be performed, and when the cabin **4** is in the tilted state, maintenance or the like of an inside of the body frame **1** can be performed.

The support shaft **55** is disposed on the rear side of the cabin **4** and at the central portion in the vertical direction of the cabin **4**. The hood **39** is provided below the support shaft **55**. An upper face of the hood **39** (an upper face of the upper wall plate **21** and an upper face of the upper hood cover **41**) extends horizontally and rearward, or is inclined downward and rearward, so as not to protrude above the support shaft **55**. In this manner, the upper face of the hood **39** is positioned below the support shaft **55** over a full length thereof in the front-rear direction, and extends horizontally or is inclined downward. Thus, the operator in the cabin **4** can easily see a wide range rearward and downward of the hood **39**, to further facilitate a smooth working operation.

As shown in FIG. **2**, the bottom wall body **58** is connected to each of a central portion in the front-rear direction of a lower end portion of the right/left side wall bodies **43**, by welding or the like. The bottom wall body **58** is formed of a metal plate or the like, and includes a bottom wall portion **59** and a pair of right/left side wall portions **60**, and has a squared C-shape as a whole. The driver's seat **63** is provided on an upper face of the bottom wall portion **59** through a cushion material or the like.

(Configuration of Traveling Device)

In FIGS. **1** and **2**, each of the right/left traveling devices **3** includes: a pair of front and rear driven wheels **68**; a drive wheel **69** disposed above and between a pair of the driven wheels **68**; and a track frame **73**. The track frames **73** are welded to the respective right/left side walls **7** of the frame main body **9** in a unified manner. The traveling device **3** is a crawler track traveling device in which a crawler track **70** is wound around the driven wheels **68** and the drive wheel **69**. The traveling device **3** is configured to be driven by a rotation of the drive wheel **69**, which is rotated about a drive shaft **71** by a rotation of the drive shaft **71**.

In each of front and rear ends of the track frame **73**, the driven wheel **68** is freely rotatably supported about a transverse shaft, and one of the pair of the driven wheels **68** is biased in a direction for adjusting a tension using a tension adjusting mechanism (not shown). A plurality of track rollers **72** are disposed between the pair of the driven wheels **68**, and each of the track rollers **72** is freely rotatably supported about a transverse shaft on the track frame **73**. The drive shaft **71** of the traveling device **3** is disposed below a rear end portion of the cabin **4**.

Each of the right/left traveling devices **3** includes a hydraulic type running motor **74**, which is configured to rotatably drive the drive shaft **71**. Through a rotation of a drum of the running motor **74**, the rotation of the drive shaft **71** rotates of the drive wheel **69** about the drive shaft **71**. With this configuration, each of the traveling devices **3** is driven by the running motor **74**.

(Configuration of Arms)

In FIGS. **9** and **10**, each of the right/left arms **77** includes a base member **106**, an intermediate member **107** and a front end member **108** arranged in a longitudinal direction thereof. The intermediate member **107** includes: an intermediate member main body **113** with an upper wall **110**, an outer wall **111** and an inner wall **112** arranged in a squared U-shape; and a bottom wall plate **114** connecting a lower end portion of the outer wall **111** and a lower end portion of the inner wall **112** of the intermediate member main body **113**. The intermediate member main body **113** and the bottom wall plate **114** are configured as separate components. The bottom wall plate **114** is fixed by welding to the lower end portion of the outer wall **111** and the lower end portion of the inner wall **112**.

The front end member **108** includes an inner wall **116** and an outer wall **117**. The front end member **108** further includes a front connection wall **118**, an upper connection wall **119**, and a lower connection wall **120**, each connecting the inner wall **116** and the outer wall **117**. Each of the front connection wall **118**, the upper connection wall **119** and the lower connection wall **120** is fixed by welding to the inner wall **116** and the outer wall **117**.

A rear end portion of the front end member **108** is fitted on and welded to a front end portion of the intermediate member **107**. A rear end portion of the inner wall **116** and a rear end portion of the outer wall **117** are disposed so as to sandwich the front end portion of the intermediate member **107** from lateral sides. Opening rim portions of respective welding holes **123** of the inner wall **116** and the outer wall **117** are welded to an inner wall and an outer wall of the intermediate member **107**, respectively. A rear end portion of the upper connection wall **119** and a rear end portion of the lower connection wall **120** are disposed so as to sandwich the front end portion of the intermediate member **107** from above and below. A rear rim etc. of the upper connection wall **119** and a rear rim etc. of the lower connection wall **120** are welded to the upper wall **110** and the bottom wall plate **114** of the intermediate member **107**, respectively.

In a tip end the front end member **108**, a front end connection boss **125** in a shape of cylinder is provided. In an inter-

mediate portion on an upper side of the front end member **108**, an upper connection boss **126** in a shape of cylinder is provided.

The base member **106** (base portion of the arm **77**) includes an outer wall **128** and the inner wall **129**. An elongating mounting wall **131** in a shape of a triangle is formed by elongating the inner wall **129**, so as to protrude downward of a lower rim of the outer wall **128**. On an inner side in the transverse direction of the elongating mounting wall **131**, an inner bracket **132** is provided in such a manner that it faces the elongating mounting wall **131**.

The base member **106** includes: an upper connection wall **133** extending along upper rim portions of the inner wall **129** and outer wall **128**; and a lower connection wall **134** extending along lower rim portions of the inner wall **129** and the outer wall **128**. The inner wall **129** and the outer wall **128** are connected through the upper connection wall **133** and the lower connection wall **134**. A bracket connection wall **136** extends along an upper rim portion of the inner bracket **132**. The inner bracket **132** is connected through the bracket connection wall **136** to an internal side face of the elongating mounting wall **131** or an internal side face of the inner wall **129**. When seen from a lateral side, an intermediate portion of the bracket connection wall **136** protrudes above the lower connection wall **134** so that the bracket connection wall **136** crosses the lower connection wall **134**.

In this manner, by crossing the bracket connection wall **136** and the lower connection wall **134**, a protruding base portion side of the elongating mounting wall **131** of the arm **77** is reinforced by the bracket connection wall **136** and the lower connection wall **134**. Accordingly, the support of the second lift link **82** by the elongating mounting wall **131** and inner bracket **132** becomes strong.

A front end portion of the base member **106** is fitted on and welded to a rear end portion of the intermediate member **107**. A front end portion of the inner wall **129** of the base member **106** and a front end portion of the outer wall **128** are disposed so as to sandwich the rear end portion of the intermediate member **107** from lateral sides. Opening rim portions of respective welding holes **137** of the inner wall **129** and the outer wall **128** are welded to the inner wall **112** and the outer wall **111** of the intermediate member **107**, respectively. A front end portion of the upper connection wall **133** of the base member **106** and a front end portion of the lower connection wall **134** are disposed so as to sandwich the rear end portion of the intermediate member **107** from above and below. A front rim and the like of the upper connection wall **133** and a front rim and the like of the lower connection wall **134** are welded to the upper wall **110** and the bottom wall plate **114** of the intermediate member **107**, respectively.

In a rear end portion of the base member **106** and between the inner wall **129** and the outer wall **128**, a first connection boss **141** having a mounting hole is provided. Between the elongating mounting wall **131** and the inner bracket **132**, a second connection boss **142** having a mounting hole is provided. Frontward of the first connection boss **141** and the elongating mounting wall **131**, and between the inner wall **129** and the outer wall **128**, a third connection boss **143** having a mounting hole is provided. A rear end of the upper connection wall **133** and a rear end of the lower connection wall **134** are connected to the first connection boss **141**. An intermediate portion of the lower connection wall **134** is provided above the third connection boss **143** so as not to be brought into contact with the third connection boss **143**.

A first arm shaft **88** is inserted into and supported by the first connection boss **141**, through the mounting hole thereof. A second arm shaft **89** is inserted into and supported by the second connection boss **142**, through the mounting hole thereof. An upper cylinder shaft **92** is inserted into and supported by the third connection boss **143** through the mounting hole thereof.

As shown in FIGS. **9** and **10**, the tip end sides of the right/left arms **77** are connected through a front connecting member **145**, and at the same time, a base side of the right/left arms **77** are connected through a rear connecting member **146**. The front connecting member **145** is formed of a pipe member in a shape of prismatic pillar. The front connecting member **145** is inserted into the tip end portions of the right/left arms **77** (the inner wall **116** and the outer wall **117** of the front end member **108**) in a penetrated state and is welded to the arms **77**. The rear connecting member **146** is formed of a cylindrical pipe member. The rear connecting member **146** is inserted into a base end side of the right/left arms **77** (the inner wall **129** and the outer wall **128** of the base member **106**) in a penetrated state and is welded to the arms **77**. The right/left arms **77**, the front connecting member **145** and the rear connecting member **146** together form a rectangular frame. As a result, stiffness of a pair of the right/left arms **77** can be enhanced, and for example, during a working operation, even when the right/left arms **77** suffer a large impact from the working implement **78** on the tip end side of the arm **77**, torsion and backlash of the right/left arms **77** can be effectively prevented.

As shown in FIG. **9**, intermediate portions on a front end side of the right/left arms **77** are bent inward in the transverse direction so that a transverse spacing distance between front end portions of the right/left arms **77** becomes smaller than transverse spacing distance between rear portions.

As shown in FIG. **8**, the arms **77** are located on both lateral sides of the body frame **1**, the driving part **5** or the cabin **4**. A spacing distance of the right/left arms **77** is set larger than a spacing distance of the right/left side walls **7** of the frame main body **9**. A whole length of the right/left arms **77** is disposed inside of a transverse width between outer ends of the right/left traveling devices **3**, and at the same time, outside of a transverse width between inner ends of the right/left traveling devices **3**. The transverse width of the cabin **4** is set larger than the spacing distance of the right/left side walls **7** of the frame main body **9**, and both lateral sides of the cabin **4** protrude laterally outward of the respective right/left side walls **7** of the frame main body **9**.

The base portion of the arm **77** is, as shown in FIGS. **1**, **2**, **9** and **10**, supported on the rear upper portion of the body frame **1**, swingably in the vertical direction through the first lift link **81** on the rear side and the second lift link **82** on the front side. Therefore, the tip end side of the arm **77** is allowed to be lifted and lowered frontward of the body frame **1**. Between the base portion of a pair of the right/left arms **77** and the rear lower portion of the body frame **1**, a pair of the right/left arm cylinders **79** each formed of a double-acting hydraulic cylinder are provided.

As shown in FIGS. **1**, **2**, **13** and **14**, a lower base portion of the first lift link **81** is inserted between a portion of the inner wall **12** and a portion of the outer wall **13** corresponding to the first mounting boss **32**, and a first link shaft **85** is inserted into the mounting hole of the first mounting boss **32** and the lower base portion of the first lift link **81**. In this manner, the lower base portion of the first lift link **81** is supported swingably in the front-rear direction about the first link shaft **85** on the body frame **1** (by the first mounting boss **32**).

A front base portion of the second lift link **82** is inserted between a portion of the stay member **34** and a portion of the inner wall **12** corresponding to the second mounting boss **36** of the body frame **1**, and a second link shaft **86** penetrates the

mounting hole of the second mounting boss **36** and the front base portion of the second lift link **82**. In this manner, the front base portion of the second lift link **82** is supported swingably in the vertical direction about the second link shaft **86** on the body frame **1** (by the second mounting boss **36**), frontward of the first link shaft **85**.

A lower base portion of the arm cylinder **79** is inserted between a portion of the inner wall **12** and a portion of the outer wall **13** corresponding to the third mounting boss **38** of the body frame **1**, and a lower cylinder shaft **91** is inserted into the mounting hole of the third mounting boss **38** and the lower base portion of the arm cylinder **79**. In this manner, the lower base portion of the arm cylinder **79** is connected swingably about the lower cylinder shaft **91** to the body frame **1**.

With this configuration, an upper free end side of the first lift link **81** and an upper tip end side of the arm cylinder **79** can be easily connected to the base portion of the arm **77**.

The base portion of the arm **77** is pivotally supported by the first arm shaft **88** on the upper free end side of the first lift link **81**, and is supported swingably in the vertical direction about the first arm shaft **88**. In addition, frontward of the first arm shaft **88**, the base portion of the arm **77** is pivotally supported by the second arm shaft **89** on a free end side of the second lift link **82**, and is supported swingably in the vertical direction about the second arm shaft **89**. Moreover, the upper tip end side of the arm cylinder **79** is connected swingably about the upper cylinder shaft **92** to the base portion of the arm **77**.

Specifically, each of the upper free end side of the first lift link **81** and the upper tip end side of the arm cylinder **79** is connected swingably to the arm **77** between the inner wall **129** and the outer wall **128**. The free end side of the second lift link **82** is connected swingably between the elongating mounting wall **131** and the inner bracket **132**. In other words, the upper free end side of the first lift link **81** is connected swingably by the first arm shaft **88** at a position rearward of the elongating mounting wall **131**, while the upper tip end side of the arm cylinder **79** is connected swingably by the upper cylinder shaft **92** frontward of the elongating mounting wall **131**. The free end side of the second lift link **82** is connected swingably by the second arm shaft **89**, below a connection line M connecting the first arm shaft **88** and the upper cylinder shaft **92**.

In addition, as described above, since the elongating mounting wall **131** protrudes downward of the lower rim of the outer wall **128** from the inner wall **129** of the base portion of the arm **77**, when the free end side of the second lift link **82** is connected between the inner wall **129** of the base portion of the arm **77** and the inner bracket **132**, the outer wall **128** does not interfere. Accordingly, the second arm shaft **89** can be easily inserted from outside the arm **77** in the transverse direction, into the elongating mounting wall **131** of the base portion of the arm **77**, the inner bracket **132** and the free end side of the second lift link **82**. As a result, workability to connect the first lift link **81**, the second lift link **82** and the arm cylinder **79** to the base portion of the arm **77** is enhanced.

Further, since the outer wall **128** of the base portion of the arm **77** does not interfere, grease application from outside the arm **77** in the transverse direction to a connecting portion between the upper free end side of the first lift link **81** and the base portion of the arm **77**, and a connecting portion between the upper tip end side of the arm cylinder **79** and the base portion of the arm **77** is facilitated. In addition, grease application from outside the arm **77** in the transverse direction to a connecting portion between the free end side of the second lift link **82** and the base portion of the arm **77** is facilitated.

The second arm shaft **89** and the second link shaft **86**, together with the first link shaft **85**, the first arm shaft **88**, the lower cylinder shaft **91**, and the upper cylinder shaft **92**, are configured to be visually checked from outside the body frame **1** in the transverse direction.

The rear connecting member **146** in the arms **77** is disposed frontward of the first arm shaft **88**, and at the same time, disposed on the connection line M connecting the first arm shaft **88** and the upper cylinder shaft **92**. Therefore, when the driver in the driving part **5** sees rearward and performs an operation or the like, by visually checking a height of the rear connecting member **146** positioned rearward, the driver is allowed to guess a height level of the working implement **78** on the tip end side of the arm **77** with some degree of accuracy, and thus a working operation is facilitated.

In addition, the rear connecting member **146** is positioned closer to the first arm shaft **88**, rather than to the upper cylinder shaft **92**. Therefore, when the arms **77** is lifted and lowered by the extension and contraction of the arm cylinders **79**, backlash of the right/left first lift links **81** in the transverse direction can be surely prevented.

When the arm cylinder **79** is contracted and the arm **77** is lowered (in the lowermost state), the rear connecting member **146** is positioned below the first arm shaft **88**. On the other hand, when the arm cylinder **79** extends and the arm **77** is lifted (in the uppermost state), the rear connecting member **146** is positioned above the first arm shaft **88**. The upper cylinder shaft **92** is disposed frontward of the rear connecting member **146**, and when the arm **77** is in the lowermost state, the upper cylinder shaft **92** is positioned below the rear connecting member **146**. When the arm **77** is in the uppermost state, the upper cylinder shaft **92** is positioned above the rear connecting member **146**. The rear connecting member **146** is disposed at an intermediate position between the first arm shaft **88** and the upper cylinder shaft **92**.

The rear connecting member **146** is disposed rearward of the cabin **4**. When the arm **77** is in the lowermost state, in order to prevent interference between the cabin **4** in the tilted state and the rear connecting member **146**, the rear connecting member **146** and the cabin **4** are spaced apart from each other in the front-rear direction.

When the arm **77** is in the lowermost state, in order to allow the upper hood cover **41** to be retained at the open position by the retaining member **51**, the rear connecting member **146** is spaced apart above the upper hood cover **41**. Even in a state in which the arm **77** is lowered, the upper hood cover **41** can be retained at the open position by the retaining member **51**, which is convenient for inspection or the like of an inside of the hood **39**.

(First Lift Link)

As shown in FIGS. **11** and **18**, the first lift link **81** includes: an inner wall **156**; an outer wall **157**; and a link rear portion connection wall **158** (link connection wall) connecting rear end portions of the inner wall **156** and outer wall **157** to each other. The first lift link **81** formed of the inner wall **156**, the outer wall **157** and the link rear portion connection wall **158** has a squared C-shape with a front side opened. In addition, the first lift link **81** includes a link intermediate portion connection wall **159** (link connection wall) configured to connect intermediate portions in the front-rear direction of the inner wall **156** and outer wall **157** to each other.

An upper support boss **161** is provided in an upper free end portion of the first lift link **81** between the inner wall **156** and the outer wall **157**, and a lower support boss **162** is provided in a base end portion of the first lift link **81** between the inner wall **156** and outer wall **157**. An arm support portion **164** with a front side opened is provided on the upper free end side of the first lift link **81** between the link inner wall **156** and the link outer wall **157**.

As shown in FIG. **11**, the first connection boss **141** in the base portion of the arm **77** is fitted into the arm support portion **164**, and the first arm shaft **88** is inserted into the first connection boss **141** and the upper support boss **161**. In other words, the base side of the arm **77** is inserted into the arm support portion **164** and supported swingably in the vertical direction by the first arm shaft **88**.

As shown in FIG. **8**, a pair of the right/left first lift links **81** are disposed laterally outward of a pair of the right/left side walls **7** of the frame main body **9**, and the lower base portions of the right/left first lift links **81** are pivotally supported by the first link shaft **85**, between the inner wall **12** and the outer wall **13** of each of the right/left support frames **11**. In other words, the right/left arms **77** are disposed laterally outward of the frame main body **9**, in such a manner that the base side of each of the right/left arms **77** is positioned laterally outward of the side wall **7** of the frame main body **9** and pivotally supported by the first arm shaft **88** on the upper free end side of the first lift link **81**.

Accordingly, it is possible to make both lateral sides of the cabin **4** mounted on the body frame **1** protrude laterally outward of the right/left side walls **7** of the frame main body **9**. Therefore, the transverse width of the cabin **4** can be set larger than the spacing distance between the right/left side walls **7** of the frame main body **9**, and for example, even when the transverse width of the frame main body **9** is made small to make the loader work machine compact, the transverse width of the cabin **4** is adequately secured, enhancing comfort of the cabin **4**.

However, as described above, the whole length of the right/left arms **77** is disposed inside of the transverse width between the outer ends of the right/left traveling devices **3**, and at the same time, outside of the transverse width between the inner ends of the right/left traveling devices **3**. Therefore, even when the transverse width of the cabin **4** is adequately secured, a transverse width of the entire loader work machine can be retained within the transverse width of the right/left traveling devices **3**. As a result, while enhancing comfort of the cabin **4**, the loader work machine is prevented from having a large size, and from losing workability in a small space.

Further, as shown in FIG. **13**, the upper free end side of each of the right/left first lift links **81** have wider width, so as to bulge laterally outward of the lower base portion. The base side of each of the right/left arms **77** is supported at a position closer to the outside in the transverse direction relative to the upper free end portion of the corresponding first lift link **81**. Between the link inner wall **156** of the first lift link **81** and an internal side face of the base portion of the arm **77**, a hose accommodation space **165** is formed. In other words, the base portion of the arm **77** is displaced offset laterally outward from the lower base portion of the first lift link **81**. The hose accommodation space **165** is formed in each of the right/left first lift links **81**.

As a result, as compared with a spacing distance of the lower base portions of the right/left first lift links **81** or the spacing distance of the right/left support frames **11**, it is possible to make a spacing distance of the base portions of the right/left arms **77** larger. Also with this configuration, the transverse width of the cabin **4** is adequately secured, enhancing the comfort of the cabin **4**.

(Arm Cylinder)

As shown in FIGS. **9**, **11** and **18**, the upper tip end side of the arm cylinder **79** is inserted between the outer wall **128** and inner wall **129** of the base portion of the arm **77**, and the upper cylinder shaft **92** which has been inserted into the third connection boss **143** is further inserted into the upper tip end side of the arm cylinder **79**, to thereby swingably connect the upper tip end side of the arm cylinder **79** to the base portion of the arm **77** by the upper cylinder shaft **92**.

(Second Lift Link)

The free end side of the second lift link **82** is inserted between the elongating mounting wall **131** and the inner bracket **132**, and the second arm shaft **89** is inserted from the second connection boss **142** into the free end side of the second lift link **82**, to thereby swingably connect the free end side of the second lift link **82** to the base portion of the arm **77** by the second arm shaft **89**. With this configuration, the base portion of the arm **77** is supported swingably in the vertical direction about the second arm shaft **89** on the free end portion of the second lift link **82**, at a position frontward of the first arm shaft **88**.

The second lift link **82** is disposed inward in the transverse direction relative to the arm cylinder **79**, and when seen from the lateral side, the arm cylinder **79** and the second lift link **82** are allowed to cross each other.

(Stopper Mechanism)

As shown in FIGS. **1-3** and **5**, between the front end portion of each of the right/left arms **77** and a front end portion of the body frame, a stopper mechanism **201** is provided, and in the state in which the arm cylinder **79** is contracted and the arm **77** is lowered, a rearward stress from the arm (working implement) **78** acting on a pair of the right/left arms **77** is received by the body frame **1**. The stopper mechanism **201** includes: a pair of right/left stoppers **202** protruding rearward from the front connecting member **145**; and a pair of right/left acceptors **203** protruding frontward from a front wall of the body frame **1**. When the arm **77** is brought to the lowermost state, the right/left stoppers **202** come into contact with or are placed in the vicinity of the right/left acceptors **203**, respectively, from a front side.

(Working Implement and Hydraulic Pipe Arrangement)

Between the front end portions of the arms **77**, the bucket **78*a*** (the working implement **78**) is connected swingably about a shaft **97** to the front end connection boss **125** through a pair of right/left brackets **95**. The bucket **78*a*** is supported swingably about the support shaft **97** to the tip end portions of the arms **77** through the brackets **95**. Between the brackets **95** of the bucket **78** and respective intermediate portions on the tip end side of the arms **77**, a pair of the right/left hydraulic actuators **98** (the dump/tilt actuator **98*a***) each formed of a double-acting hydraulic cylinder are disposed. The bucket **78** is configured to swing (perform scooping and dumping action) by the extension and contraction of the hydraulic actuator **98**.

As indicated with a chain line in FIG. **1**, a hydraulic pressure-driven attachment **78*b*** (another working implement **78**), such as grapple, hydraulic pressure-driven mower and hydraulic breaker, and the movable part actuator **98*b*** for driving a movable part of the attachment **78*b***, instead of or in addition to the bucket **78*a*** (the working implement **78**), may be removably attached to the tip end portion of the arm **77**. In addition, when the hydraulic pressure-driven attachment **78*b***, such as grapple, hydraulic pressure-driven mower and hydraulic breaker, instead of the bucket **78*a*** (the working implement **78**), is attached to the tip end portion of the arm **77**, the dump/tilt actuator **98*a*** may perform tilting and dumping action of the installed attachment **78*b***.

Therefore, two types of the hydraulic actuator **98** for actuating the working implement **78** (including the bucket **78*a***, and the attachment **78*b*** attached to the tip end portion of the arm **77**, instead of or in addition to the bucket **78*a***) are present: the dump/tilt actuator **98*a*** for performing dumping and tilting action of the working implement **78**; and the movable part actuator **98*b*** for actuating the movable part of the

working implement **78**. As shown in FIG. **1**, on an internal side face of the tip end portion of the left arm **77**, a pair of service ports SP are provided which are configured to be connected to the movable part actuator **98***b*.

As shown in FIGS. **12**, **13** and **17**, a hydraulic pipe arrangement **167** (a left hydraulic pipe arrangement **167***a* and a right hydraulic pipe arrangement **167***b* (not shown)) configured to be connected to the hydraulic actuator **98** (**98***a*, **98***b*) extends from a body frame **1** side to an arm **77** side. The hydraulic pipe arrangement **167** penetrates from inside of the inner wall **12** of the support frame **11** to the outside and extends to the arm **77** side.

The hydraulic pipe arrangement **167** includes: the movable part hydraulic pipe arrangement **167***a* for feeding and discharging the operating oil to and from the movable part actuator **98***b* of the attachment **78***b*; and the dump/tilt hydraulic pipe arrangement **167***b* (not shown) for feeding and discharging the operating oil to and from a pair of the right/left dump/tilt actuators **98**. The movable part hydraulic pipe arrangement **167***a* is disposed inside the first lift link **81** on the left side, while the dump/tilt hydraulic pipe arrangement **167***b* is disposed inside the first lift link **81** on the right side.

Next, the left hydraulic pipe arrangement **167***a* will be described below. Since the right hydraulic pipe arrangement **167***b* has the same or similar structural arrangement to that of the left hydraulic pipe arrangement **167***a*, a duplicate description for the right hydraulic pipe arrangement **167***b* is omitted. In addition, FIGS. **12** and **13** depict the left hydraulic pipe arrangement **167***a* having two or four pipes, which include those for feeding and those for returning. A pair of the hydraulic pipe arrangements **167***a* run frontward of the first arm shaft **88** and first link shaft **85**, and at the same time, are disposed in the hose accommodation space **165** of the first lift link **81** on the left side.

In the first lift link **81**, a pair of the hydraulic pipe arrangements **167***a* are disposed at a position closer to the link inner wall **156** spaced apart from the link outer wall **157** and run in the vertical direction. As shown in FIGS. **12**, **13** and **17**, an upper portion side of a pair of the hydraulic pipe arrangements **167***a* is disposed along an inner face of the link inner wall **156** of the first lift link **81**, and at the same time, along an internal side face of the arm **77** from an upper end of the first lift link **81**. In addition, a pair of the hydraulic pipe arrangements **167***a* extend upward from the upper end of the first lift link **81**, curve into an arc shape in a vertical plane extending in the front-rear direction and are disposed linearly along the internal side face of the arm **77** from a base end side of the arm **77** toward the tip end side of the arm **77**.

A lower portion side of a pair of the hydraulic pipe arrangements **167***a* is bent inward in the transverse direction below the first lift link **81** on the left side, inserted into the body frame **1** through an opening **171** in the inner wall **12** of the support frame **11**, and connected to a control valve **217** provided inside the body frame **1**.

Each of the hydraulic pipe arrangements **167***a* on a lower base side of the first lift link **81** is a metal pipe portion **173** formed of a metal pipe having stiffness, while each of the hydraulic pipe arrangements **167***a* on the upper free end side of the first lift link **81** is a hydraulic hose portion **174** formed of a flexible hydraulic hose. The hydraulic hose portion **174** extends upward from the upper end of the first lift link **81** and is disposed along the internal side face of the arm **77**, while a lower end side of the metal pipe portion **173** of the hydraulic pipe arrangement **167***a* is bent inward in the transverse direction, and inserted into the body frame **1** through the opening **171** in the inner wall **12** of the support frame **11**, and the metal pipe portion **173** is connected to the control valve **217** provided inside the body frame **1** through a hydraulic hose **110**, inside the body frame **1**.

As shown in FIGS. **12** and **15**, the lower support boss **162** is provided with a clamp member **176** configured to clamp an intermediate portion of the metal pipe portion **173** of the hydraulic pipe arrangement **167***a*. The clamp member **176** includes: a mounting stage **177** having a squared U-shape protruding from the lower support boss **162**; a screw cylinder body **178** fixedly installed to the mounting stage **177**; a cushion material **179** into which a pair of the hydraulic pipe arrangements **167***a* are inserted; a press plate **181** configured to press a pair of the hydraulic pipe arrangements **167***a* to the mounting stage **177** through the cushion material **179**; and a bolt **183** configured to be screwed with the screw cylinder body **178** to press the press plate **181** to the screw cylinder body **178**. The clamp member **176** is configured to clamp a pair of the hydraulic pipe arrangements **167***a* each at the intermediate portion of the metal pipe portion **173**.

As shown in FIGS. **12** and **16**, on an upper end portion of the metal pipe portion **173** of each of the hydraulic pipe arrangements **176***a*, a joint portion **184** having a nut body **183** is provided, and an L-shaped upper support stay **186** and an L-shaped lower support stay **187** arranged at an interval in the vertical direction are attached to the link intermediate portion connection wall **159** of the first lift link **81**, using a fastener, such as bolt. The nut body **183** of the joint portion **184** for the hydraulic pipe arrangement **176***a* is fixedly installed on each of the upper support stay **186** and the lower support stay **187**, to thereby fix an upper end side of the metal pipe portion **173** of the hydraulic pipe arrangement **176***a* to the first lift link **81**. The metal pipe portion **173** and the hydraulic hose portion **174** of the hydraulic pipe arrangement **176***a* are removably connected to each other at the joint portion **184**.

As shown in FIGS. **12** and **17**, in an upper end portion of the link inner wall **156** of the first lift link **81**, a front projection **188** is provided which protrudes frontward and is configured to restrict lateral sway of the hydraulic hose portion **174**, and on the inner face of the link inner wall **156** in the hose accommodation space **165**, a clamp **189** configured to fix the hydraulic hose portion **174** is provided.

As shown in FIG. **17**, a pair of hydraulic pipe arrangements **191** each formed of a metal pipe are fixed to the internal side face of the arm **77** using the clamp and disposed in the tip end portion of the arm **77**, and then connected to the respective service ports SP. The hydraulic hose portions **174** of a pair of the hydraulic pipe arrangements **167***a* are connected to the respective hydraulic pipe arrangements **191** through joints. Therefore, the control valve **217** on the body frame **1** side and a pair of the service ports SP on the tip end side of the aim **77** are connected through a pair of the hydraulic pipe arrangements **167** and the like, and when the attachment **78***b* is attached to the tip end portion of the arm **77** instead of or in addition to the bucket **78***a*, the attachment **78***b* is configured to be actuated from a control valve **217** side, by feeding and discharging the operating oil to and from a driving portion attachment **98***b* of the attachment **78***b*.

According to the configuration of the present embodiment, the hydraulic pipe arrangement **167** can be protected between the link outer wall **157** and the link inner wall **156** of the first lift link **81**. Portions of the hydraulic pipe arrangement **167** exposed outside are reduced, and the hydraulic pipe arrangement **167** disposed from the body frame **1** side to the arm **77** side is not likely to be damaged. In addition, since the hydraulic pipe arrangement **167** is covered between the link outer wall **157** and the link inner wall **156** of the first lift link **81**, an appearance of a rear portion of the loader work machine can

be prevented from being deteriorated, which may otherwise be caused by the hydraulic pipe arrangement **167**. Further, since the movement of the hydraulic pipe arrangement **167** can be restricted between the link outer wall **157** and the link inner wall **156** of the first lift link **81**, a number of the clamps for fixing the hydraulic pipe arrangement **167** can be reduced. Since the hose accommodation space **165** is provided in which the hydraulic hose portion **174** can be disposed linearly in the vertical direction, interference or friction between the hydraulic pipe arrangement **167** and the base portion of the arm **77** can be prevented, and the hydraulic pipe arrangement **167** can be easily and securely disposed in the vertical direction in the first lift link **81**.

In addition, the upper portion side of the hydraulic pipe arrangement **167** is disposed along the inner face of the link inner wall **156** of the first lift link **81**, and at the same time, along the internal side face of the arm **77** from the upper end of the first lift link **81**. Therefore, even when the arm **77** is lifted and lowered, a portion of the hydraulic pipe arrangement **167** that protrudes upward is not likely to sway in the transverse direction, and the hydraulic pipe arrangement **167** can be prevented from hitting or rubbing against the first lift link **81** and the arm **77**.

The lower portion side of the hydraulic pipe arrangement **167** is bent inward in the transverse direction below the first lift link **81**, inserted into the body frame **1** through the opening **171** in the inner wall **12** of the support frame **11**, and connected to the control valve **217** provided inside the body frame **1**. Therefore, the hydraulic pipe arrangement **167** extending downward from the first lift link **81** can be guided into the body frame **1** with the shortest distance, and thus the hydraulic pipe arrangement **167** can be set as short as possible.

The upper free end side of each of the right/left first lift links **81** have wider width, so as to bulge laterally outward of the lower base portion, and the base side of each of the right/left arms **77** is supported at a position closer to the outside in the transverse direction relative to the upper free end portion of the corresponding first lift links **81**, so that the base side of the arm **77** is positioned outward in the transverse direction relative to the hydraulic pipe arrangement **167** in the upper free end side of the first lift link **81**. Therefore, a transverse width of the hose accommodation space **165** becomes larger, and even when a pair of the arms **77** are swung in the vertical direction, interference between the base side of each of the right/left arms **77** and the hydraulic pipe arrangement **167** of the upper free end side of the first lift link **81** is more effectively prevented.

As described above, at least the upper portion side of the hydraulic pipe arrangement **167** is formed of the flexible hydraulic hose portion **174**. In the upper end portion of the link inner wall **156** of the first lift link **81**, the front projection **188** is provided which protrudes frontward and is configured to restrict lateral sway of the hydraulic hose portion **174**, and on the inner face of the link inner wall **156** in the hose accommodation space **165**, the clamp **189** configured to fix the hydraulic hose portion **174** is provided. Therefore, the upper portion side of the hydraulic pipe arrangement **167** can be prevented in advance from being bit or abraded by a portion of the first arm shaft **88** of the first lift link **81**. It should be noted that all of the hydraulic pipe arrangement **167** may be formed of flexible hydraulic hose.

There are two types of the hydraulic actuator **98** for actuating the working implement **78**. One is the dump/tilt actuator **98***a* for performing dumping and tilting action of the working implement **78**; and the other is the movable part actuator **98***b* for actuating the movable part of the working implement **78**. The hydraulic pipe arrangement **167** includes: the dump/tilt hydraulic pipe arrangement **167***a* for feeding and discharging the operating oil to and from the dump/tilt actuator **98***a*; and the movable part hydraulic pipe arrangement **167***b* for feeding and discharging the operating oil to and from the movable part actuator **98***b*. The dump/tilt hydraulic pipe arrangement **167***a* is disposed in one of the right/left first lift links **81**, and the movable part hydraulic pipe arrangement **167***b* is disposed in the other of the right/left first lift link **81**. Therefore, the dump/tilt hydraulic pipe arrangement **167***a* and the movable part hydraulic pipe arrangement **167***b* are separately assigned to the right/left first lift links **81**, and connection to the dump/tilt hydraulic pipe arrangement **167***a* for feeding and discharging the operating oil to and from the dump/tilt actuator **98***a* and the connection to the movable part hydraulic pipe arrangement **167***b* for feeding and discharging the operating oil to and from the movable part actuator **98***b* can be performed easily and securely without error.

(Arrangement of Shafts)

As shown in FIGS. **1** and **2**, positional relationships among the first link shaft **85**, the second link shaft **86**, the first arm shaft **88** and the second arm shaft **89** are set so that nearly an entirety of the first lift link **81** is retained frontward of a rear end of the vehicle body of the loader work machine (rear end of the rear hood cover **40**) in a whole range of lifting and lowering action of the arm **77** from the lowermost state to the uppermost state. In other words, the positional relationships among the first link shaft **85**, the second link shaft **86**, the first arm shaft **88** and the second arm shaft **89** are set so that an upper portion of the first lift link **81** is placed frontward of the rear end of the vehicle body of the loader work machine in the whole range of lifting and lowering action of the arm **77**.

Accordingly, during a whole process of lifting and lowering the arm **77**, the first lift link **81** never protrudes rearward of the rear end of the vehicle body of the loader work machine to a large extent, and during a working operation or the like, the first lift link **81** can be prevented from hitting and interfering with an object rearward of the loader work machine. Therefore, when the loader work machine is backed up, the first lift link **81** can be prevented from coming into contact with the object rearward. Further, since the first lift link **81** never protrudes rearward to a large extent, workability in a small space is enhanced. Moreover, if the first lift link **81** protrudes rearward to a large degree, an obliquely rearward view is hindered by the first lift link **81** and becomes poor. However, with the present configuration, the first lift link **81** never protrudes rearward to a large degree, and the obliquely rearward view becomes excellent.

When the arm **77** is lifted and lowered and the second link shaft **86**, the first arm shaft **88**, and the second arm shaft **89** are aligned on a single line, the first lift link **81** is inclined rearward to the largest degree as indicated with a chain line in FIG. **2**. The first arm shaft **88** is configured to be positioned frontward of the rear end of the vehicle body (rear end of the rear hood cover **40**) of the truck loader under this circumstance. When the upper free end side of the first lift link **81** is swung rearward to the largest degree within the whole range of the lifting and lowering action of the arm **77**, a position in the front-rear direction of the upper portion of the first lift link **81** nearly coincides with a position of the rear end of the vehicle body (rear end of the rear hood cover **40**) of the truck loader.

In this manner, in the state in which the upper free end side of the first lift link **81** is swung rearward to the largest degree, even when the first lift link **81** protrudes rearward of the rear end of the vehicle body of the truck loader, the upper portion

of the first lift link **81** only slightly protrudes rearward, and during a working operation or the like, the first lift link **81** is not likely to interfere.

It is configured that, when the arm **77** is in the lowermost state, the second arm shaft **89** is positioned on a first link shaft **85** side relative to a line segment connecting the second link shaft **86** and the first arm shaft **88**, and at the same time, a line segment connecting the second link shaft **86** and the second arm shaft **89** and a line segment connecting the first arm shaft **88** and the second arm shaft **89** intersect one another at an obtuse angle. With this configuration, when the arm cylinder **79** is contracted and the arm **77** is lowered, after the first lift link **81** is swung rearward about the first link shaft **85**, the first lift link **81** is further swung forward to some degree.

Accordingly, the upper free end side of the first lift link **81** swung rearward to the largest degree only in the middle of the lifting and lowering action of the arm **77**. Though the first lift link **81** protrudes rearward of the rear end of the vehicle body of truck loader, it protrudes only during a brief period of time in the middle of the lifting and lowering action of the arm **77**, and also from this point of view, the first lift link **81** is not likely to interfere during a working operation.

The first lift link **81** is made longer than the second lift link **82**, and a distance between the first link shaft **85** and the first arm shaft **88** is set longer than a distance between the second link shaft **86** and the second arm shaft **89**. A distance between the first arm shaft **88** and the second arm shaft **89** is set shorter than the distance between the first link shaft **85** and the first arm shaft **88**. In addition, the second link shaft **86** is disposed frontward of the drive shaft **71** of the traveling device **3**.

As shown in FIGS. **2**, **9** and **13**, it is configured that, when the arm **77** is in the lowermost state, the first lift link **81** is inclined upward and rearward, and the first arm shaft **88** is positioned rearward of the first link shaft **85**. It is also configured that the first link shaft **85** is positioned rearward of the lower cylinder shaft **91**.

In the embodiment described above, each of the right/left traveling devices **3** is formed of the crawler track traveling device in which the crawler track **70** is wound around the driven wheels **68** and the drive wheel **69**. Alternatively, instead of this, each of the right/left traveling devices **3** may be formed of a front wheel tire and a rear wheel tire.

In the embodiment described above, the rear connecting member **146** and the cabin **4** are spaced apart from each other in the front-rear direction, in order to prevent interference between the cabin **4** in the tilted state and the rear connecting member **146**, in the state in which the arm **77** is lowered. Alternatively, instead of this, in the state in which the arm **77** is lowered, the back side of the cabin **4** in the tilted state may come into contact with the rear connecting member **146**, to thereby retain the cabin in the tilted state.

In the embodiment described above, grease is applied to the connecting portions of the arm **77** with the first lift link **81**, the arm cylinder **79** and the second lift link **82**. Alternatively, instead of this, lubricant other than grease may be applied to the connecting portions of the arm **77** with the first lift link **81**, the arm cylinder **79** and the second lift link **82**.

In the embodiment described above, the track frame **73** of each of the right/left traveling devices **3** is attached to the corresponding side wall **7** of the frame main body **9** by welding in a unified manner. Alternatively, instead of this, the track frame **73** of each of the right/left traveling devices **3** may be detachably attached to the corresponding side wall **7** of the frame main body **9**, using a fastener, such as bolt nut.

(Another Embodiment)

Another embodiment of the loader work machine according to the present invention will be described next with reference to the drawings. With respect to components corresponding to those in the foregoing embodiment, description thereof will not be made again. In the following embodiment, the same reference character denotes the component having the same nomination in the foregoing embodiment.

Referring to FIGS. **21-24**, the body frame **1** formed of iron plate or the like includes: the frame main body **9** having the bottom wall **6**, a pair of the right/left side walls **7** and the front wall **8**; and a pair of the right/left support frames **11**. A pair of the right/left support frames **11** are connected and welded to the rear end side of the frame main body **9**, which is formed in a box shape including the bottom wall **6**, a pair of the right/left side walls **7**, and the front wall **8**, with an upper side opened. The upper rim of the rear end portion of each of the right/left side walls **7** has an arc shape which is gradually inclined downward and rearward. On the upper end of each of the right/left side walls **7**, the bent rim portion **7***a* protruding laterally outward is provided. On the upper end of the front wall **8**, the bent rim portion **8***a* protruding rearward is provided, on each of lateral sides of the bent rim portion **8***a*, the connecting piece **8***b* extends outward, and the connecting piece **8***b* is welded to the front end of the corresponding bent rim portion **7***a* of the side wall **7**.

Each of the right/left support frames **11** includes: the inner wall **12**; the outer wall **13**; and the frame connecting wall **14** connecting the rear end of the inner wall **12** and the rear end of the outer wall **13**, and has a squared C-shape as a whole. The mounting plate **16** curved in an arc shape is disposed on the upper end of the rear end portion of the side wall **7** in such a manner that the mounting plate **16** and the side wall **7** are arranged in a T-shape or L-shape, and the mounting plate **16** is welded to the side wall **7**. The front end portion of the mounting plate **16** is overlapped with and welded to the rear end portion of the bent rim portion **7***a* of the side wall **7**. The outer side portion of the mounting plate **16** protrudes outward from the upper end of the side wall **7**, and the bent rim portion **7***a* of the side wall **7** and the mounting plate **16** constitute the fender **17** configured to cover the upper side and the rear side of the traveling device **3**. The front lower end of each of the inner wall **12** and the outer wall **13** of each of the right/left support frames **11** is welded to the mounting plate **16**. With this configuration, each of the right/left support frames **11** is connected and fixed to the side wall **7** of the body frame **1** through the mounting plate **16**. The upper portion of each of the inner wall **12**, the outer wall **13** and the frame connecting wall **14** of the support frames **11** protrudes above the side wall **7**.

The upper portions of the inner wall **12** of the right/left support frames **11** are connected to each other through the transversal connecting member **19**. The transversal connecting member **19** includes: the gate-shaped front wall plate **20**; and the upper wall plate **21** protruding rearward from the upper end of the front wall plate **20**. The rear portion **21***a* of the upper wall plate **21** is inclined downward and rearward. On both lateral end portions of the upper wall plate **21** of the transversal connecting member **19**, a pair of the right/left support brackets **22** protruding upward are provided. Each of the right/left support brackets **22** has a pair of right/left support plates **23**, and each of the support plates **23** has the mounting hole **24** on the front side and the locking hole **25** on the rear side, both penetrating in the transverse direction.

In the intermediate portion of the rear portion of the bottom wall **6** of the frame main body **9**, a pair of the right/left support bases **26** protruding upward are provided. On the rear end portion of the frame main body **9**, a connection reinforcing plate **27** extends along the rear end of the bottom wall **6**. The connection reinforcing plate **27** is connected and welded to a

pair of the right/left support frames **11**, and is welded to the rear end portion of the bottom wall **6** of the frame main body **9**. The lower ends of the right/left support frames **11** are connected to each other through the connection reinforcing plate **27** and a lower connection plate **28**. The reinforcing plate **27** and the lower connection plate **28** are welded to each other, the connection reinforcing plate **27** is connected and welded to the bottom wall **6** of the body frame **1**, both end portions of the connection reinforcing plate **27** and the lower connection plate **28** are welded to the respective inner walls **12** of a pair of the support frames **11** or the frame connecting walls **14**, and a pair of the right/left support frames **11** are connected to the bottom wall **6** through the connection reinforcing plate **27** and the lower connection plate **28**.

In the upper rear end portion of each of the right/left support frames **11**, the first mounting boss **32** having the mounting hole is provided between the inner wall **12** and the outer wall **13**. On the upper front end portion of the outer wall **13** of each of the right/left support frames **11**, the stay member **34** protruding rearward is provided. Between the stay member **34** and the inner wall **12**, the second mounting boss **36** having the mounting hole is provided. In the lower end portion of each of the right/left support frames **11**, the third mounting boss **38** having the mounting hole is provided between the inner wall **12** and the outer wall **13**.

As shown in FIG. **22**, on an upper side of a back wall body **51** of the cabin **4**, a window frame **65** is provided. The window frame **65** is fixed between the rear support pole portions **45** of the right/left side frame members **42** of the cabin **4** by welding or the like, and a rear glass **66** is attached to the window frame **65**.

Referring to FIGS. **19**, **20** and **24**, to an outside of each of the right/left side walls **7** of the body frame **1**, front and rear end portions of the track frame **73** of the traveling device **3** are fixed through mounting plates **84** using fasteners **87**, such as bolt. On an inner face of each of the right/left side walls **7** of the body frame **1**, at positions corresponding to the position of the fixed track frame **73**, a front reinforcing plate **75** and a rear reinforcing plate **76** are overlapped with and welded to the inner face.

Each of the right/left front reinforcing plates **75** includes a standing wall **75***a* that overlaps with the inner face of the side wall **7**, and a lower wall **75***b* that overlaps with an upper face of the bottom wall **6**, and has an L-shape as a whole. The lower walls **75***b* of the right/left front reinforcing plates **75** are spaced apart in the transverse direction, and a portion of the bottom wall **6** of the frame main body **9** between a pair of the lower walls **75***b* serves as a channel for discharging dust, operating oil or the like. Like the front reinforcing plate **75**, each of the right/left rear reinforcing plates **76** includes a standing wall **76***a* that overlaps with the inner face of the side wall **7**, and a lower wall **76***b* that overlaps with the upper face of the bottom wall **6**, and has an L-shape as a whole.

As shown in FIGS. **21** and **24**, the frame main body **9** is provided with a partition plate **80** that separates the front portion and the rear portion of the body frame **1**. The partition plate **80** is removably inserted between a pair of the right/left side walls **7** of the frame main body **9**.

To an upper rim portion or the like of the partition plate **80**, a sealing member (not shown) is attached, and when the cabin **4** is swung to the mount position, the bottom wall body **58** of the cabin **4** comes into contact with the partition plate **80** from above through the sealing member. With the presence of the partition plate **80** and the bottom wall body **58** and back wall body **51** of the cabin **4**, portions frontward of the back wall body **51** of the cabin **4** and the front portion of the body frame **1** are shielded from the rear portion of the body frame **1** on which the engine **101** is mounted (which will be described later). Frontward of the partition plate **80**, a step **83** as a foot rest for the driver seated on the driver's seat **63** of the cabin **4** is provided.

Referring to FIGS. **21-23**, on the rear side above the bottom wall **6** of the body frame **1**, the engine **101** is provided. On a front end side of the engine **101**, a flywheel **104** is attached. The central portion in the transverse direction on the rear side of the engine **101** is set on and fixed to the connection reinforcing plate **27** through the anti-vibration member **99**, and the right/left portions on the front side of the engine **101** are set on and fixed to the right/left support bases **26**, respectively, through the corresponding anti-vibration member **100**.

On a front side the bottom wall **6** of the body frame **1**, a fuel tank **102** and an operating oil tank **103** are disposed. The fuel tank **102** is disposed immediately rearward of the partition plate **80**, and by upward removing the partition plate **80** from the frame main body **9**, the fuel tank **102** is allowed to slid frontward on the bottom wall **6** and to be upward removed from a front end portion of the frame main body **9**.

By the power of the engine **101**, the running hydraulic controller **215** performs feeding and discharging of the operating oil in the operating oil tank **103** to and from a pair of the right/left running motors **74** to thereby drive and control a pair of the right/left running motors **74**. By inputting the power of the engine **101** through the running hydraulic controller **215**, the gear pump **216** performs feeding and discharging of the operating oil in the operating oil tank **103** to and from the arm cylinders **79** and a bucket cylinder **98**, through the work control valve **217**. The work control valve **217** drive controls the arm cylinders **79** and the bucket cylinder **98** to thereby contract and extend the arm cylinders **79** and the bucket cylinder **98**.

The body frame **1** includes the frame main body **9** having the bottom wall **6** and a pair of the right/left side walls **7** and the front wall **8**, and a pair of the right/left support frames **11** which are connected and welded to the rear end side of the frame main body **9**. Therefore, the entire body frame **1** can be formed in a unified manner without using a fastener, such as bolt nut, to thereby advantageously secure the strength of the entire body frame **1**. In addition, in terms of the components of the body frame **1**, no attention should be paid to loosening of the fastener, such as bolt nut, and damage in the mounting hole for bolt insertion. In addition, during the assembly of the body frame **1**, a fastening step of bolt becomes unnecessary, leading to reduced number of steps in assembling the body frame **1**. Accordingly, the entire body frame **1** can be easily manufactured.

The mounting plate **16** is disposed on the upper end of the rear end portion of the side wall **7** of the frame main body **9** between the inner wall **12** and the outer wall **13** of the support frame **11**. Therefore, the inner wall **12** and the outer wall **13** of the support frame **11** can be easily and securely welded to the upper end of the rear end portion of the side wall **7**, and the inner wall **12** and the outer wall **13** of the support frame **11** are firmly connected and fixed to the upper end of the rear end portion of the side wall **7** of the frame main body **9**. Accordingly, the frame main body **9** and the support frame **11** can be easily unified.

Since the mounting plate **16** is disposed on the upper end of the rear end portion of the side wall **7** in such a manner that they are arranged in a T-shape or L-shape, the mounting plate **16** is easily and firmly welded to the upper end of the rear end portion of the side wall **7**, and thus the mounting plate **16** is strongly fixed to the side wall **7**. The inner wall **12** and the outer wall **13** of the support frame **11** can be easily and

securely welded to the mounting plate **16**, and the inner wall **12** and the outer wall **13** can be strongly fixed to the mounting plate **16**.

Moreover, the track frame **73** of each of the right/left traveling devices **3** is configured as a component separate from the body frame **1**, and is attached to the corresponding side wall **7** of the frame main body **9** using the fastener **87**, such as bolt, and thus the underbody frame is provided as a component separate from the body frame **1**. Therefore, when the frame is pained with two colors, masking becomes unnecessary, and such simplified handling leads to cost reduction. Specifically, in the case where the track frame **73** of each of the right/left traveling device **3** is connected and welded to the body frame **1** to form the body frame **1** and the track frame **73** in a unified manner, when it is desired that the body frame **1** and the underbody frame be painted with different colors, it is necessary to paint the body frame **1** and the track frame **73** with two different colors. This further necessitates a step of masking the frames, leading to an increase in the number of steps.

When the body frame **1** and the track frame **73** are formed in a unified manner, a weight of the entire frame becomes heavy, leading to difficulties in handling of an article as a single item and in transporting into and out of a facility. As a result, a production cost tends to be higher. However in the present application, the underbody frame can be configured as a component separate from the body frame **1**, and therefore, it is possible to transport the body frame **1** and the track frame **73** separately into and out of the facility, enhancing easiness in handling of the article as a single item. Further, the step of masking for two-color paint becomes unnecessary. As a result of these, the production cost becomes suppressed.

Since each of the connecting pieces **8***b* is welded to the front end of the bent rim portion **7***a* of the corresponding side wall **7**, the frame main body **9** itself can become strong by the welding.

By the partition plate **80** and the bottom wall body **58** and back wall body **51** of the cabin **4**, the portions frontward of the back wall body **51** of the cabin **4** and the front portion of the body frame **1** are shielded from the rear portion of the body frame **1** on which the engine **101** is mounted. Therefore, heated air from the engine **101** in the rear portion of the body frame **1** can be surely blocked by the partition plate **80** and the bottom wall body **8** and back wall body **51** of the cabin **4**. Accordingly, the heated air from the engine **101** never reach the driver in the cabin **4** who is seated on the driver's seat **63** or driver's legs or the like extending in the body frame **1**, and the driver can be surely protected from the heat of the engine.

To the outside of each of the right/left side walls **7** of the body frame **1**, front and rear end portions of the track frame **73** of the traveling device **3** are fixed using fasteners, such as bolt, and on the inner face of each of the right/left side walls **7** of the body frame, at positions corresponding to the position of the fixed track frame **73**, the front reinforcing plate **75** and the rear reinforcing plate **76** are overlapped with and welded to the inner face. Therefore, by the front reinforcing plate **75** and the rear reinforcing plate **76**, the portion of each of the right/left side walls **7** of the frame main body **9** to which the track frame **73** is fixed can be effectively reinforced. Moreover, the reinforcing plates **75**,**76** have the standing walls **75***a*,**76***a* that overlap with the inner face of the side wall **7** and the lower walls **75***b*,**76***b* that overlap with the upper face of the bottom wall **6**, respectively, the standing wall and the lower wall being arranged in an L-shape. Therefore, the front reinforcing plate **75** and the rear reinforcing plate **76** themselves have enhanced stiffness, and by the front reinforcing plate **75** and the rear reinforcing plate **76**, the body frame **1** can be strongly reinforced from the side wall **7** to the bottom wall **6**.

Since the lower walls **75***b* of the right/left front reinforcing plates **75** are spaced apart in the transverse direction, a step is not present in a central portion in a width direction of the bottom wall **6** that may otherwise be formed by the lower wall **75***b* and block the discharge of dust, operating oil or the like, and therefore, even when dust, operating oil or the like drops on the bottom wall **6** of the frame main body **9**, the dust, operating oil or the like on the bottom wall **6** can be easily discharged.

It should be noted that, in the embodiment described above, on the rear upper portion of the body frame **1**, the base side of the arm **77** is supported swingably in the vertical direction through the rear first lift link **81** and the rear second lift link **82**. Alternatively, instead of this, the base side of the arm **77** is directly supported swingably on the rear portion of the body frame **1**, without the first lift link **81** and the second lift link **82**.

Industrial Applicability

According to the present invention, the hydraulic pipe arrangement disposed from the body frame side to the arm side is not likely to be damaged, the appearance of the rear postion of the loader work machine is prevented from being deteriorated which may otherwise be caused by exposed hydraulic pipe arrangement, and the number of the clamps required for fixing the hydraulic pipe arrangement can be reduced. Accordingly, the present invention can be applied to a truck loader or the like.

What we claim is:

1. A loader work machine comprising:

a body frame including a frame main body having a bottom wall, a pair of right/left side walls and a front wall; and a pair of right/left support frame provided on rear end portions of the frame main body, each of the support frames having an inner wall and an outer wall;

a cabin mounted on the body frame;

a pair of right/left traveling devices supporting the body frame;

a pair of right/left arms disposed on right/left lateral sides of the body frame and cabin;

a working implement attached between tip end portions of the right/left arms;

hydraulic actuators provided on the tip end portions of the right/left arms and configured to actuate the working implement;

a pair of right/left first lift links provided at rear portions of the body frame for supporting base portions of the respective arms swingably in a vertical direction, each of the lift links including a link outer wall, a link inner wall, a link connection wall connecting the link outer wall and link inner wall, and an arm support portion provided at an upper free end portion thereof by providing an opening on a front side thereof between the link inner wall and the link outer wall;

a pair of right/left second lift links provided at rear portions of the body frame more frontward than the first lift links for supporting the base portions of the respective arms swingably in the vertical direction;

a pair of right/left arm cylinders extending between the base portions of the respective arms and the rear portions of the body frame for lifting and lowering the respective arms;

a first link shaft provided between the inner wall and outer wall of the support frame associated therewith for pivotally supporting a lower base portion of the first lift link associated therewith: and

a first arm shaft pivotally supporting the base portion of the arm associated therewith and received by the arm support portion,

wherein a tip end side of the arm is lifted and lowered frontward of the body frame,

wherein the base portion of the arm is supported by the arm support portion at a position adjacent the link outer wall in a transverse direction, to form a hose accommodation space by the link inner wall and an internal side face of the base portion of the arm, and

wherein a hydraulic pipe arrangement extends toward the arm to be connected to the hydraulic actuator, the hydraulic pipe arrangement extending through from inside to outside of the link inner wall and running frontward of the first arm shaft and first link shaft to be disposed in the hose accommodation space.

2. The loader work machine according to claim **1**, wherein an upper portion of the hydraulic pipe arrangement is disposed along an inner face of the link inner wall, and extends along the internal side face of the arm from an upper end of the first lift link.

3. The loader work machine according to claim **1**, wherein the upper free end portion of the first lift link is made wider in the transverse direction so as to bulge laterally outward of the lower base portion of the first lift link, and the base portion of the arm is disposed offset laterally outward from a base portion of the first lift link.

4. The loader work machine according to claim **1**, wherein

at least the upper portion of the hydraulic pipe arrangement is formed of a flexible hydraulic hose portion,

a front projection is provided at an upper end portion of the link inner wall and protrudes frontward therefrom for restricting lateral sway of the hydraulic hose portion, and

a clamp is provided on the inner face of the link inner wall forming the hose accommodation space, the clamp being configured to fix the hydraulic hose portion.

5. The loader work machine according to claim **1**, wherein the inner wall and the outer wall are disposed laterally outward of the side wall associated therewith.

6. The loader work machine according to claim **5**, further comprising a pair of right/left mounting plates, each of the mounting plates including an inner side portion fixed to a rear upper end of the side wall associated therewith, and an outer side portion protruding laterally outward from the side wall;

wherein a front lower end of the inner wall and a front lower end of the outer wall are fixed to an upper face of the outer side portion of the mounting plate.

7. The loader work machine according to claim **6**, wherein

each of the right/left side wall has a bent rim portion provided at an upper end thereof, the bent rim portion protruding laterally outward, the rear upper end of the side wall being gradually inclined downward as it extends rearward;

a front end portion of the mounting plate is fixed to a rear end portion of the bent rim portion, and the mounting plate is attached to the rear upper end of the side wall so that the mounting plate and the side wall form a T-shape or L-shape, and

the outer side portion of the mounting plate protrudes laterally outward from the upper end of the side wall so that the bent rim portion of the side wall and the mounting plate form a fender for covering an upper side and a rear side of the traveling device associated therewith.

8. The loader work machine according to claim **7**, wherein

the front wall has a bent rim portion at an upper end thereof, the bent rim portion protruding rearward, right/left connecting pieces extending laterally outward from opposite lateral sides of the bent rim portion, and

each of the right/left connecting pieces is fixed to a front end of the bent rim portion of the side wall associated therewith.

9. The loader work machine according to claim **5**, wherein a transverse width of the cabin is larger than a spacing distance between the right/left side walls.

10. The loader work machine according to claim **5**, wherein

an intermediate portion on a front end side of the arm is bent inward in the transverse direction so that a transverse width between front end portions of the right/left arms becomes smaller than a transverse width between rear portions of the right/left arms, and

a whole length of the arm is disposed inward of an outer end and outward of an inner end of the traveling device associated therewith.

11. The loader work machine according to claim **1**, further comprising a transversal connecting member connecting upper portions of the right/left inner walls,

wherein the transversal connecting member includes a front wall plate, and an upper wall plate protruding rearward from an upper end of the front wall plate, a rear portion of the upper wall plate being inclined downward and rearward.

12. The loader work machine according to claim **1**, further comprising:

a connection reinforcing plate which is fixed to a rear end portion of the bottom wall along a rear end of the bottom wall and connected and fixed to lower ends of the right/left support frames; and

a lower connection plate which is fixed to a rear end portion of the connection reinforcing plate along a rear end of the connection reinforcing plate and connected and fixed to the lower ends of the right/left support frames.

13. The loader work machine according to claim **1**, wherein each of the right/left traveling devices includes a track frame which is a component separate from the body frame and is fixed to the side wall associated therewith.

14. The loader work machine according to claim **13**, further comprising a pair of right/left reinforcing plates;

wherein each of the right/left reinforcing plates is fixed to an inner face of the side wall associated therewith at a position corresponding to a position for fixing the track frame.

15. The loader work machine according to claim **14**, wherein

each of the right/left reinforcing plates includes a standing wall overlapping with the inner face of the side wall and a lower wall overlapping with an upper face of the bottom wall, the standing wall and the lower wall together forming an L-shape, and

the lower walls of the right/left reinforcing plates are spaced apart in the transverse direction.

16. The loader work machine according to claim **14**, wherein

a front end portion and a rear end portion of the track frame are fixed to an outer face of the side wall, and

a front reinforcing plate and a rear reinforcing plate are fixed to the inner face of the side wall at positions corresponding to positions of the front end portion and rear end portion of the fixed track frame, respectively.

17. The loader work machine according to claim **1**, wherein

the cabin includes a pair of right/left side wall bodies, a back wall body closing a back side of the cabin and a bottom wall body connecting lower end portions of the right/left side wall bodies,

the cabin is swingably supported on the body frame so as to be switchable between a mount state in which a bottom side of the cabin is placed on the body frame, and a tilted state in which the bottom side of the cabin is spaced apart upward from the body frame,

a partition plate is provided for separating the frame main body into a front portion and a rear portion of the body frame, and a driver's seat is provided on the bottom wall body frontward of the back wall body, and

when the cabin is brought to the mount state, the bottom wall body comes into contact with an upper side of the partition plate, portions frontward of the back wall body and the front portion of the body frame are shielded from the rear portion of the body frame on which an engine is mounted, by the partition plate, bottom wall body and back wall body.

* * * * *