United States Patent [19]

Wagner et al.

[11] **Patent Number: 5,004,398**

[45] **Date of Patent: Apr. 2, 1991**

[54] **BACKHOE MOUNTING DEVICE FOR A SKID STEER LOADER**

[75] Inventors: **Oryn B. Wagner**, Bismarck; **Terry J. Alm**, Mandan, both of N. Dak.

[73] Assignee: **Clark Equipment Company**, South Bend, Ind.

[21] Appl. No.: **479,383**

[22] Filed: **Feb. 13, 1990**

[51] **Int. Cl.**[5] **E02F 3/28**

[52] **U.S. Cl.** **414/723**; 172/273; 403/317; 414/786

[58] **Field of Search** ..... 414/686, 723, 920, 912, 414/786; 172/272, 273, 274, 275; 403/316, 317; 292/304, 223, 196, DIG. 49

[56] **References Cited**

U.S. PATENT DOCUMENTS

2,832,489	4/1958	Bailey	414/607
3,672,521	6/1972	Bauer et al.	214/145
3,732,996	5/1973	Bauer et al.	214/152
3,939,997	2/1976	Frank	414/686
3,984,016	10/1976	Kuhn	214/131
4,033,469	7/1977	Frank	414/686
4,117,944	10/1978	Beckstrom et al.	131/214
4,142,642	3/1979	Myers	414/719
4,150,504	4/1979	Asche	37/103
4,279,566	7/1981	Sagaser et al.	414/686
4,661,036	4/1987	Horsch	414/686
4,793,764	12/1988	Hamon	414/686

FOREIGN PATENT DOCUMENTS

1164323 2/1964 Fed. Rep. of Germany 414/723

Primary Examiner—Robert J. Spar
Assistant Examiner—Donald W. Underwood
Attorney, Agent, or Firm—Kinney & Lange

[57] **ABSTRACT**

A mounting device for attaching an accessory apparatus to an off road vehicle. The mounting device includes a carrier frame mounted to the accessory and a mounting frame attached between the actuating arms of the off road vehicle. The mounting frame includes a bar member that is engageable with an overhanging member on the carrier frame to form a load bearing connection between the vehicle and the accessory apparatus. The mounting device further includes a pair of lug members secured to the carrier frame that are releasibly engageable with horizontally directed openings formed in hooks attached to opposite sides of the vehicle. Adjacent each of the lugs is mounted a movable over center locking mechanism that is movable between a locked position wherein the lugs are locked to the hooks to secure the accessory to the vehicle, and an unlocked position which allows the lugs to be removed from the openings in the hooks. Each of the over center locking mechanisms include a pivotable locking pawl engageable with the hook, an operating lever and a spring biased link which couples the pawl to the operating lever.

30 Claims, 8 Drawing Sheets

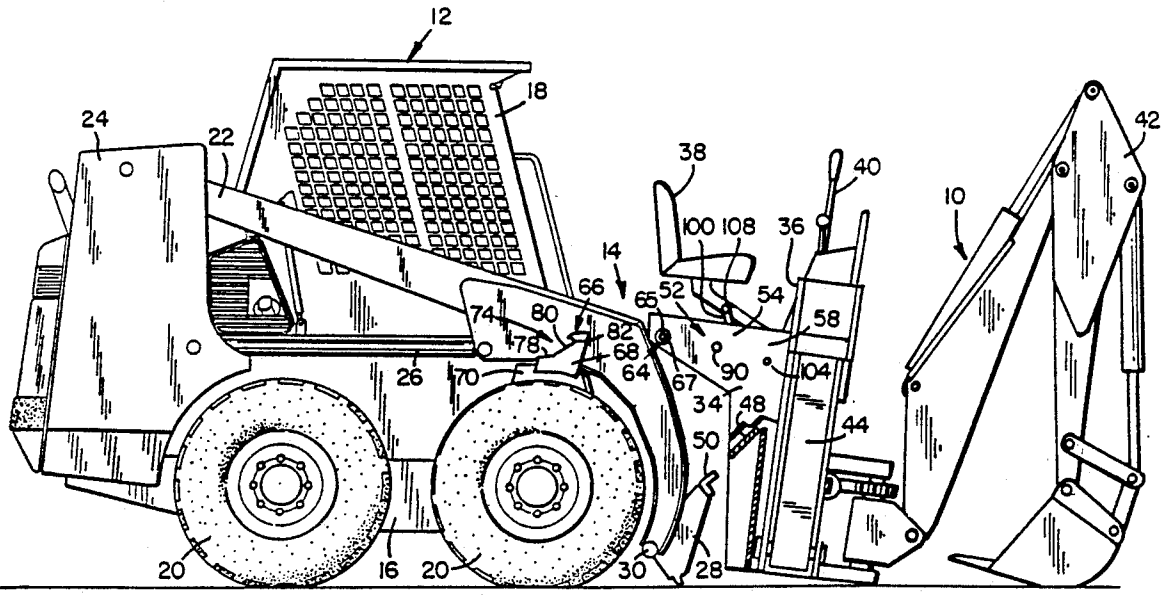

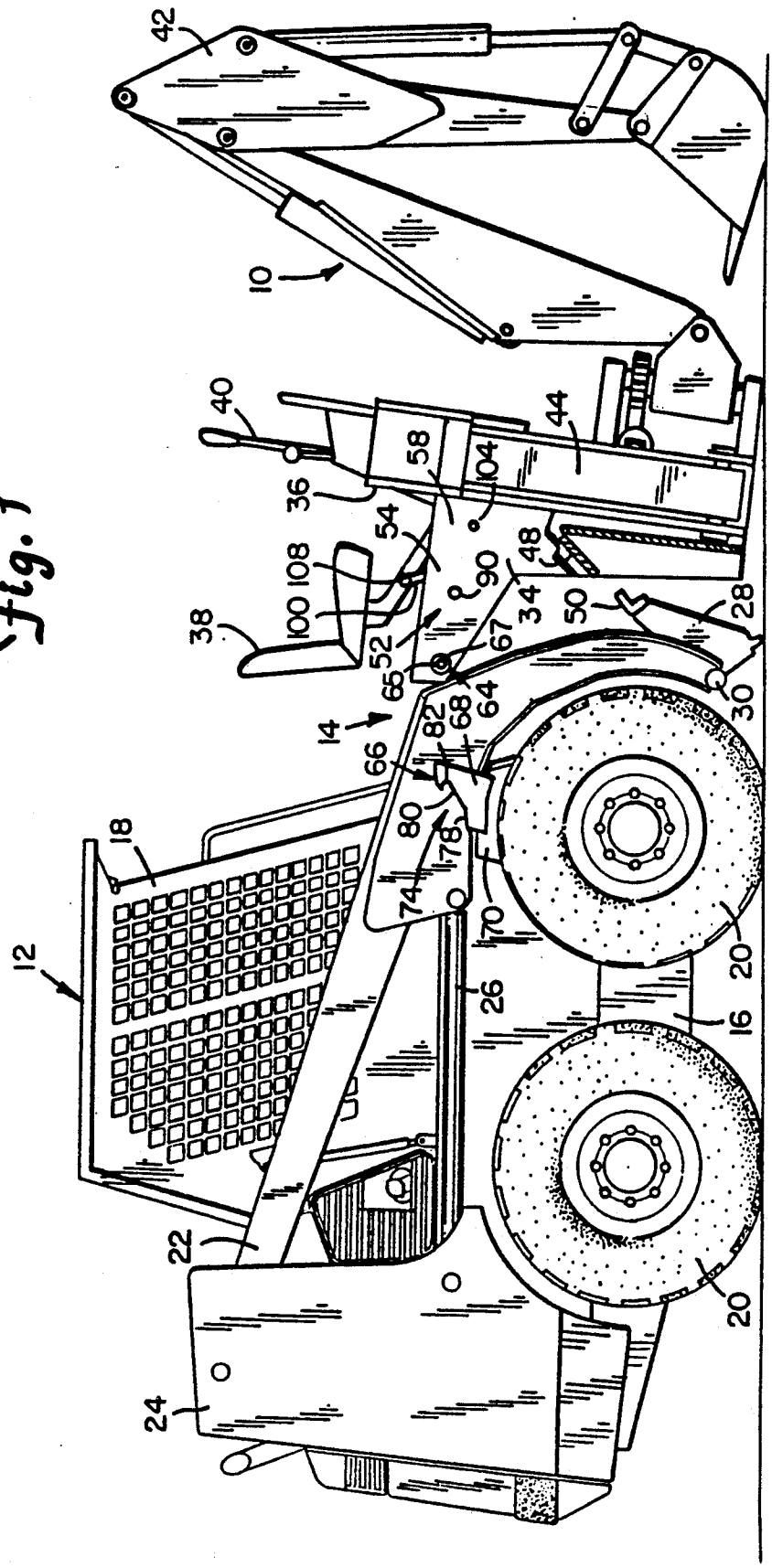
42
10
40
44
58
104
36
54
48
90
34
50
28
38
100
108
52
67
65
64
30
14
82
68
66
80
78
74
70
18
12
26
20
16
22
20
24

Fig. 1

Fig. 2

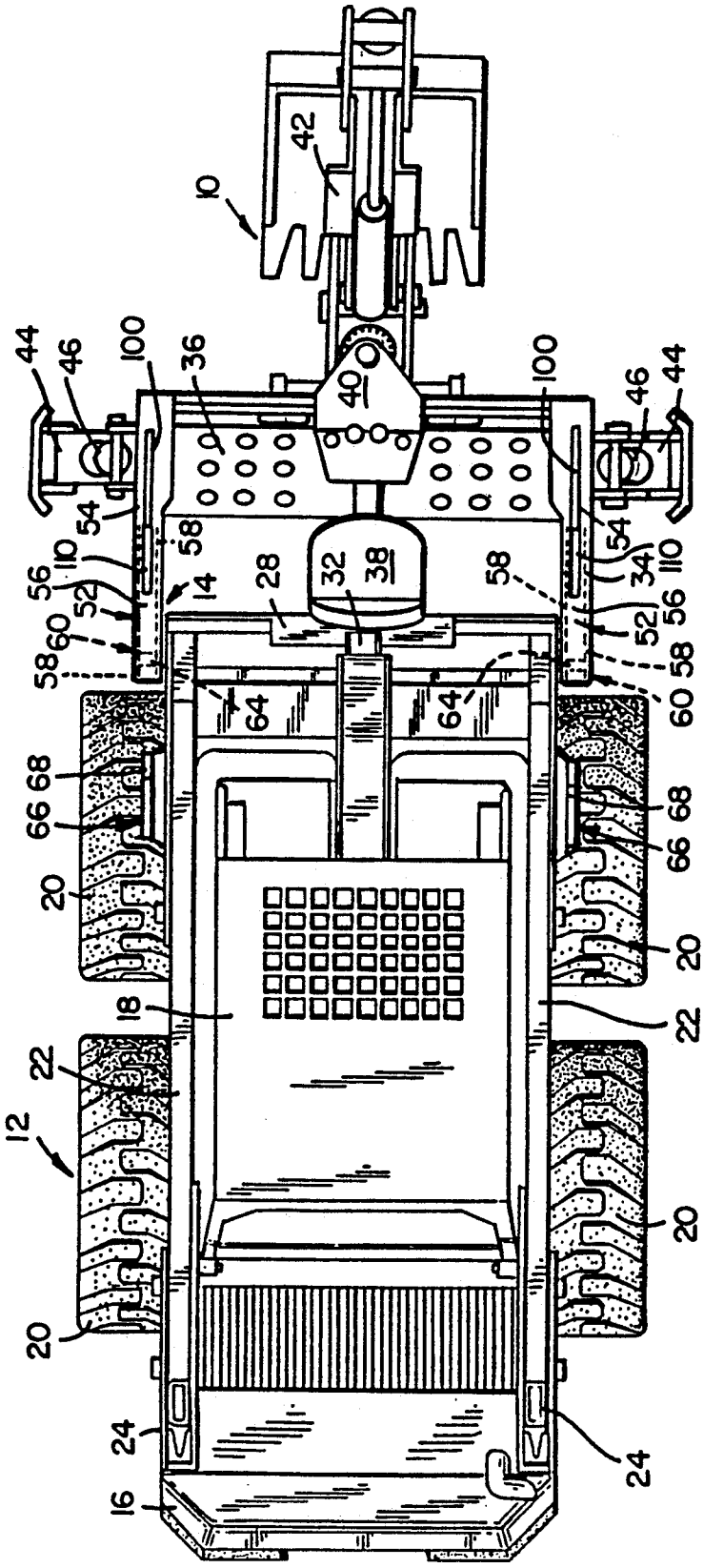
10
42
44
46
100
36
40
54
58
110
56
52
60
14
28
32
38
34
64
68
66
20
18
22
12
24
16

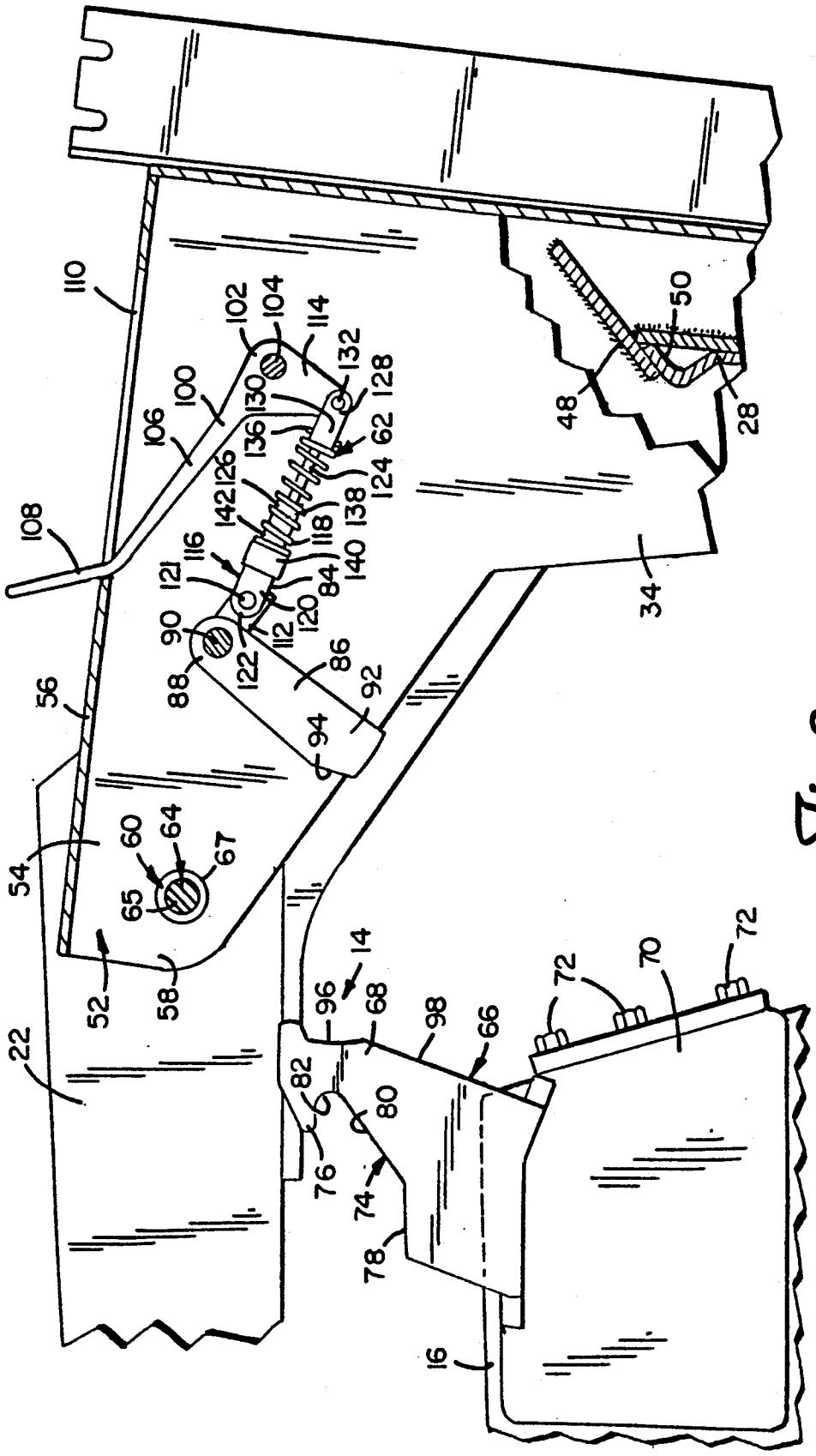
110
102
104
114
132
128
100
130
106
136
62
126
124
142
138
108
118
116
140
121
84
120
90
112
122
86
88
92
94
56
54
60
64
67
65
52
58
22
14
96
68
98
66
82
80
76
74
78
16
72
70
72
50
48
28
34

Fig. 3

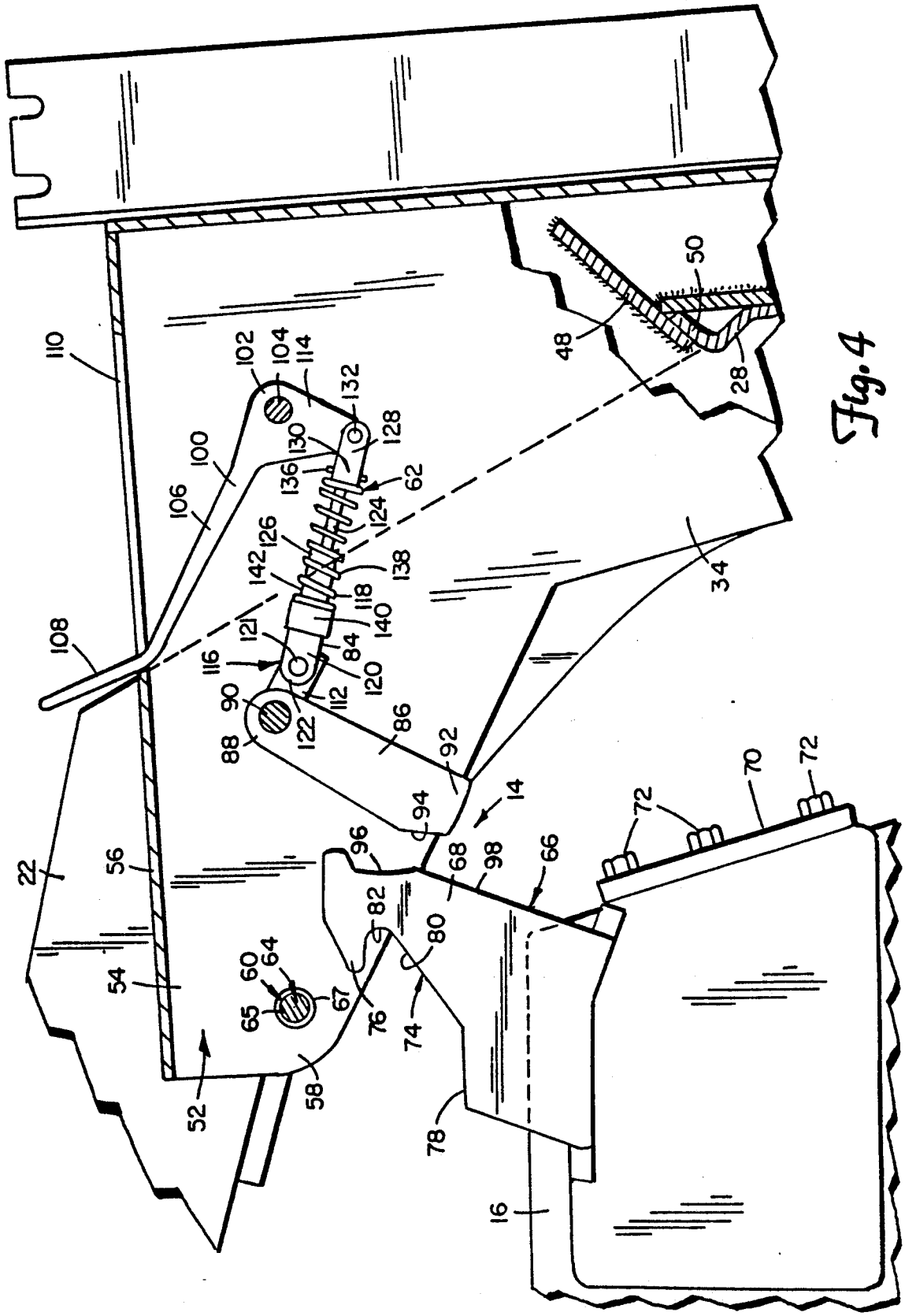
110
102
104
114
132
128
130
136
62
100
106
124
126
142
138
118
140
121
84
116
120
112
90
122
88
86
92
108
22
56
54
52
58
60
64
65
67
76
82
80
74
78
96
94
14
68
98
66
16
72
70
72
34
48
50
28

Fig. 4

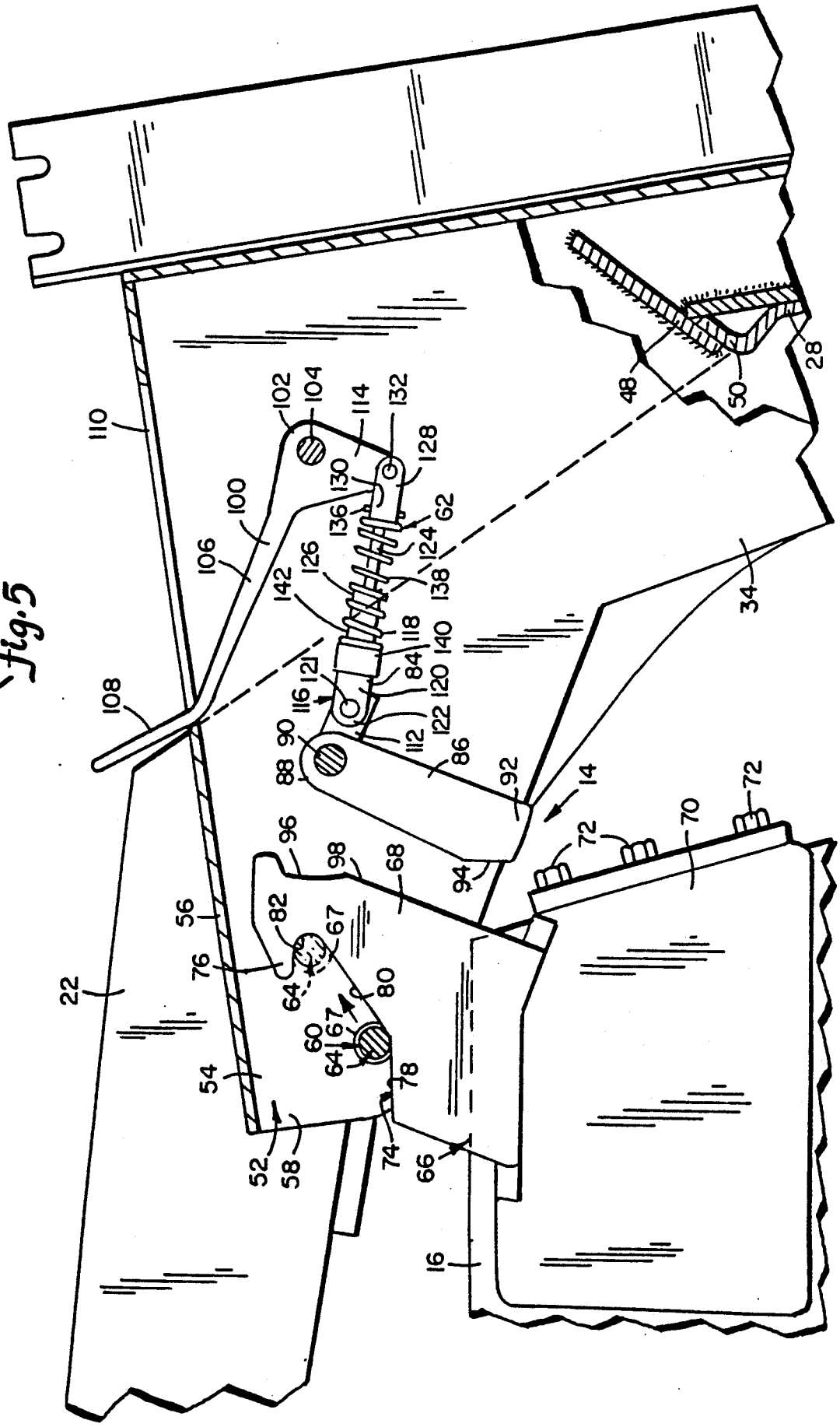
110
102
104
114
132
128
130
136
62
124
138
126
142
118
140
84
120
121
116
122
112
90
88
86
92
14
108
100
106
48
50
28
34
96
98
68
94
72
70
72
56
82
67
76
64
80
22
60
67
64
78
54
52
58
74
66
16

Fig. 5

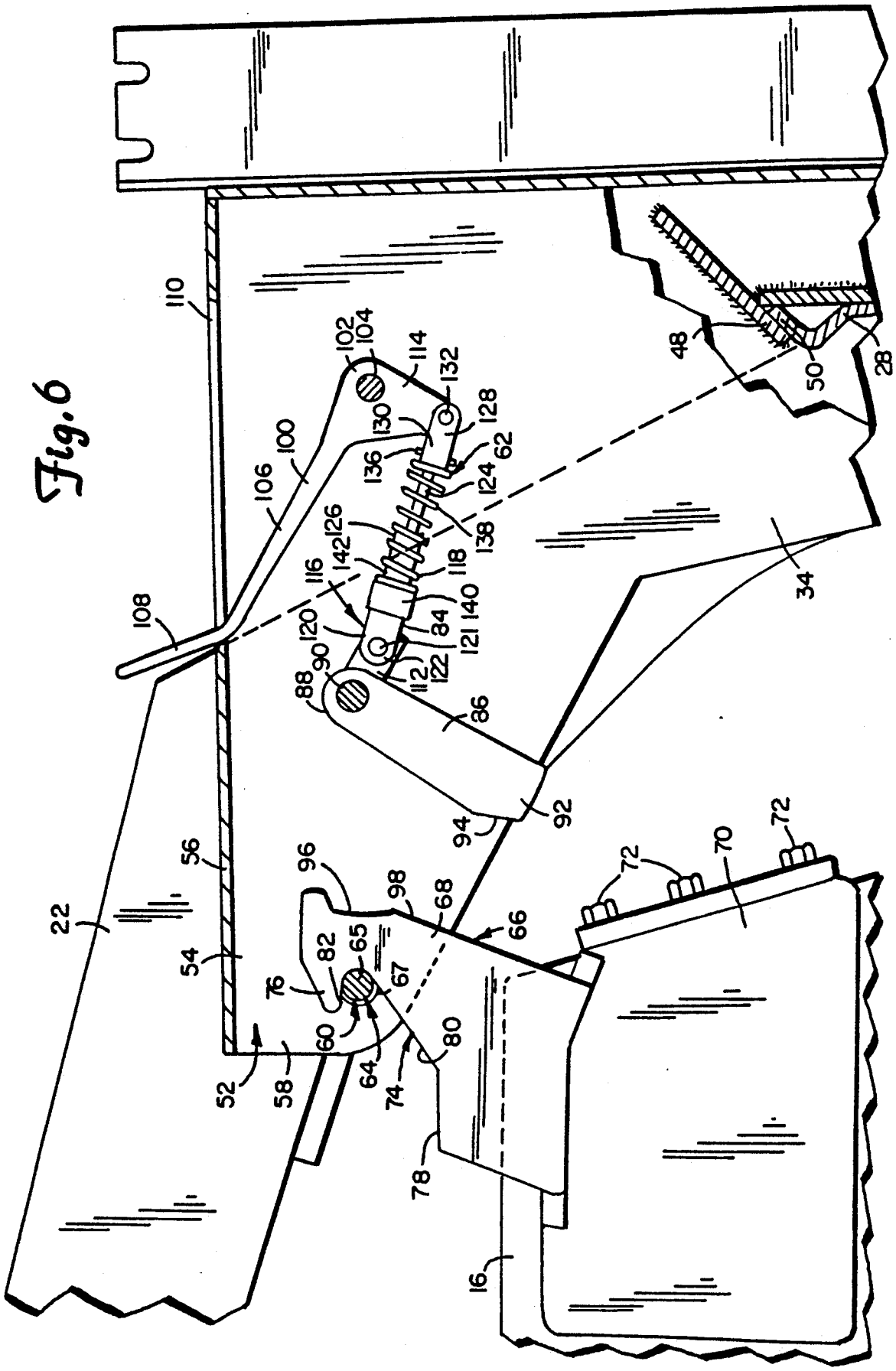
110
102
104
114
132
128
130
62
136
124
100
106
126
138
142
118
116
140
34
108
120
84
121
90
122
112
88
86
48
50
28
92
94
56
96
98
68
66
72
70
72
22
54
82
65
76
67
60
64
80
52
58
74
78
16

Fig. 6

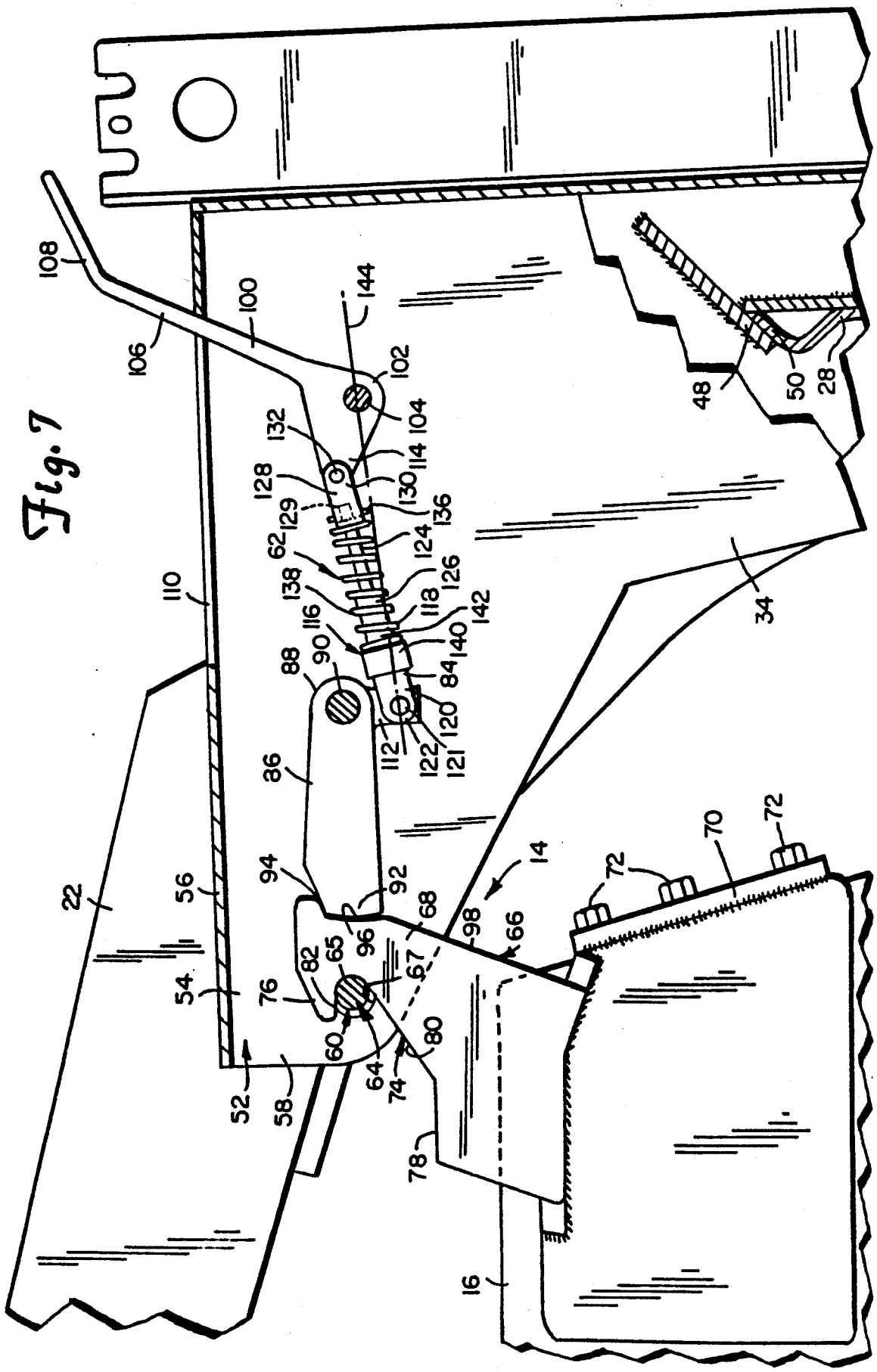
108
106
100
144
102
104
132
114
128
130
129
136
62
124
126
138
118
116
142
140
90
88
84
120
112
122
121
110
86
94
92
56
22
54
76
82
65
96
68
67
98
66
14
60
64
74
80
52
58
78
16
72
70
72
34
48
50
28

Fig. 7

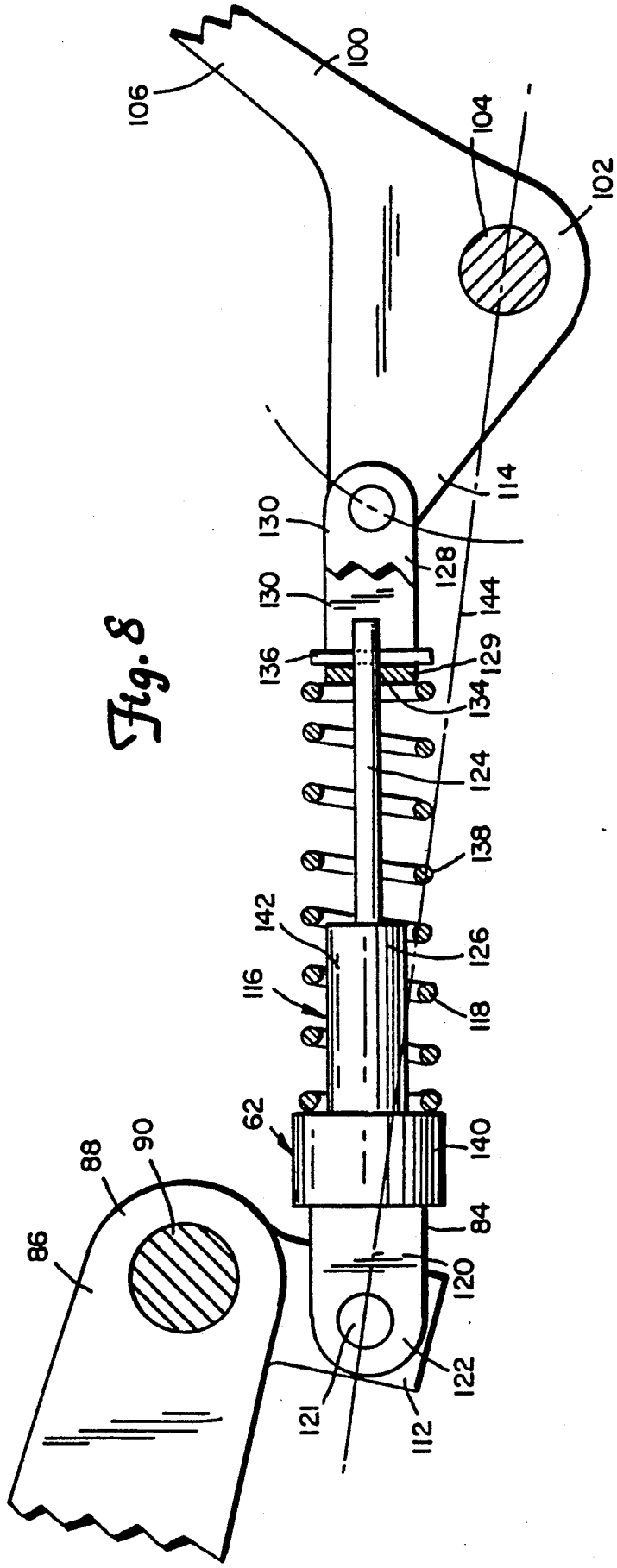
106
100
104
102
114
130
128
130
144
136
129
134
124
138
142
126
116
118
62
140
88
90
84
86
120
122
121
112

Fig. 8

BACKHOE MOUNTING DEVICE FOR A SKID STEER LOADER

BACKGROUND OF THE INVENTION

This invention relates generally to connection devices for attaching an accessory apparatus to an off road vehicle. In particular, the present invention is a mounting device with an over center locking assembly for mounting a backhoe attachment to a skid steer loader.

Mounting devices for attaching implements to off road vehicles are in widespread use. U.S. Pat. No. 4,279,566 to Sagaser et al. discloses one such mounting device for attaching a backhoe attachment to a skid steer loader. The backhoe attachment is connected to the loader by a pair of spaced apart connection devices and an adaptor assembly. The adaptor assembly includes an elongate member extending between the boom arms of the loader. The elongate member is configured to engage in a wedge fit manner an overhanging member attached to a mounting frame of the backhoe attachment. The adaptor assembly connection provides a lower, load bearing connection between the mounting frame of the backhoe attachment and the loader, and allows the boom arms to lift the backhoe attachment to a position that permits actuation of the connection devices. The pair of spaced apart connection devices provide a stabilizing upper connection between the loader and backhoe attachment.

The connection devices include a pair of transverse, cylindrical bars attached to opposite sides of the main frame of the loader by anchor elements. A pair of spaced apart, U-shaped channel elements are secured to the backhoe attachment. The walls of the channel elements include downwardly disposed openings that are configured to engage opposite ends of the cylindrical bars when the backhoe attachment is lifted into position by the boom arms of the loader.

The channel elements include moveable sleeve members having wedge shaped openings that are adapted to engage the cylindrical bars and lock the bars within the downwardly disposed openings. The sleeve members are biased into this engaged position by spring elements disposed between the sleeve members and channel elements. The sleeve members are also releasibly engageable with projections on the channel elements that retain the sleeve members in positions spaced from the downwardly disposed openings to allow the channel elements to be disengaged from the bars.

It is evident that there is a continuing need for improved mounting devices for attaching implements to off road vehicles. In particular, there is a need for mounting devices which permit attachments to be quickly and securely mounted to off road vehicles. The mounting devices should also be convenient to use.

SUMMARY OF THE INVENTION

The present invention is a convenient-to-use mounting device for securely attaching an implement to a pair of spaced apart actuating arms on an off road vehicle. The mounting device includes a mounting frame secured to the actuating arms of the off road vehicle. The mounting frame is configured to engage a carrier frame secured to the implement. A hook assembly secured to the off road vehicle releasibly receives a lug assembly attached to the implement. When the lug assembly is engaged with the hook assembly, an over center locking assembly movably mounted on the implement releasibly locks the hook and lug assemblies together.

The mounting frame includes a bar member which engages an overhanging member secured to the carrier frame to provide a load bearing connection between the off road vehicle and the implement. This load bearing connection allows the actuating arms to lift the implement off the ground so as to engage the lug assembly with the hook assembly of the off road vehicle.

The hook assembly includes a pair of spaced hooks mounted on opposite sides of a main frame of the off road vehicle. Rear edges of the hooks include horizontally directed openings. The lug assembly includes a pair of spaced transverse lugs. Each lug includes a pin retained at its opposite ends in a pair of spaced transverse bushings mounted to the carrier frame. As the implement is lifted off the ground it is rotated rearwardly and then lowered and rotated forwardly so that the lugs pass over the hooks and then subsequently engage the horizontally directed openings of the hook assembly.

The over center locking assembly includes a pair of over center locking mechanisms mounted adjacent to the lugs. Each of the over center locking mechanisms is movable between an unlocked position which permits the lugs to be readily disengaged from the hooks, and a locked position wherein the lugs are locked within the horizontally directed hook openings. Included in each of the over center locking mechanisms is a pivotable pawl that is coupled to a pivotable operating lever by a spring biased link. Front edges of the hooks include notches that are configured to receive the pawls when the over center locking mechanisms are in their locked positions.

This mounting device is relatively uncomplicated and is convenient to use. It allows an implement to be quickly and securely attached to an off road vehicle.

BRIEF DESCRIPTION OF THE DRAWINGS

FIG. **1** is a side elevational view of a skid steer loader and a detached backhoe attachment which shows components of the mounting device of the present invention.

FIG. **2** is a top elevational view of the backhoe attachment secured to the loader by the mounting device shown in FIG. **1**.

FIG. **3** is a side elevational view of one side of the mounting device partially in section with portions broken away showing the mounting frame engaged with the carrier frame and the lug elevated above the hook.

FIG. **4** is a side elevational view similar to FIG. **3** showing the lug above the horizontally directed opening of the hook.

FIG. **5** is a side elevational view similar to FIG. **3** showing the lug engaged with the limiting surface of the hook opening in solid lines, and the lug engaged with the terminal portion of the hook opening in phantom lines.

FIG. **6** is a side elevational view similar to FIG. **3** showing the lug engaged with the terminal portion of the horizontally directed hook opening.

FIG. **7** is a side elevational view similar to FIG. **5** with the over center locking mechanism shown in the locked position.

FIG. **8** is an enlarged side elevational view partially in section with portions broken away which shows components of the spring biased link of the over center locking mechanism.

DETAILED DESCRIPTION OF THE PREFERRED EMBODIMENTS

A mounting device **14** in accordance with the present invention is illustrated generally in FIGS. **1** and **2**. Mounting device **14** is used to secure accessories such as backhoe attachment **10** to off road vehicles such as skid steer loader **12**. Mounting device **14** is illustrated in greater detail in FIGS. **3–8** and described in subsequent portions of this specification. However, a complete understanding of the mounting device **14** will be facilitated by the following general description of the loader **12** and backhoe attachment **10**.

As shown in FIGS. and **21**, the loader **12** includes a main frame **16** and an operator's cab **18**. Loader **12** is supported for over the ground travel by wheels **20** rotatably mounted to frame **16**. Motive force for the wheels **20** is provided by a hydrostatic drive system (not shown) mounted to the main frame **16** and controlled by an operating unit (not shown) mounted within the cab **18**.

A pair of spaced actuating arms or lift arms **22** are pivotally mounted at their first ends to upright supports **24**. Hydraulic lift cylinders **26** (only one being visible in FIG. **1**) raise and lower the lift arms **22** with respect to the main frame **16** in a known manner. A mounting frame **28** is pivotally connected by pivot mechanism **30** (see FIG. **1**) to second ends of the lift arms **22**. The mounting frame **28** is rotated with respect to the lift arms **22** in a known manner by a tilt cylinder **32** (see FIG. **2**).

As seen in FIGS. and **2**, the backhoe attachment **10** includes a carrier frame **34** and an operator's compartment **36**. The operator's compartment **36** includes an operator's chair **38** and controls **40** for manipulating a conventional backhoe **42** in a known manner. The backhoe attachment **10** further includes a pair of stabilizing elements such as pivotable outriggers **44** that extend transversely from opposite sides of the carrier frame **34**. The outriggers **44** are raised and lowered in a known manner by hydraulic cylinders **46** (see FIG. **2**). The outriggers **44** are lowered to engage the ground and provide laterally support to the backhoe attachment **10** when digging with the backhoe **42**. The stabilizing elements can also take the form of vertical outriggers (not shown) which would extend vertically from opposite sides of the backhoe attachment **10**.

As seen in FIG. **1**, the carrier frame **34** includes an overhanging member **48** extending along an intermediate portion thereof. Overhanging member **48** is configured to receive an elongate bar member **50** extending across a top edge of the mounting frame **28**. As seen in FIGS. **3–7**, the bar member **50** engages the overhanging member **48** in a wedge fit manner to provide a load bearing connection between the backhoe attachment **10** and loader **12**. The carrier frame **34** is securely locked to the mounting frame **28** by a quick attachment device such as disclosed in the U.S. Pat. No. 3,672,521 to Bauer et al. This load bearing connection allows the lift cylinders **26** to raise the attachment **10** off the ground and permits the tilt cylinder **32** to be actuated to rotate the attachment **10** relative to the lift arms **22**.

As seen in FIG. **2**, the carrier frame **34** further includes a pair of spaced stabilizing arms **52** that extend rearwardly toward the loader **12** from opposite sides of the carrier frame **34**. Each stabilizing arm **52** includes a downwardly opening, substantially U-shaped channel member **54** that includes an upper base portion **56** and a pair of downwardly extending side walls **58**. The channel members **54** house a lug assembly **60** and an over center locking assembly **62** that form part of the mounting device **14**.

The lug assembly **60** includes a pair of lugs **64**, each of which extends transversely between both of the side walls **58** of the channel members **54**. Each of the lugs **64** is a pin **65** whose opposite ends are retained by bushings **67** mounted in the side walls **58**. As seen in FIGS. **5–7** the lug assembly **60** is adapted to releasibly engage a hook assembly **66** mounted on the main frame **16** of the loader **12**. As seen in FIG. **2**, the hook assembly **66** includes a pair of hooks **68** mounted to opposite sides of the main frame **16**. The channel members **54** are configured to ride over the hooks **68** so that the hooks **68** are received between the side walls **58** and below base portions **56**. The hooks **68** are mirror images of one another, hence, only the hook **68** attached to the right side of the frame **16** as shown in FIGS. **3–7** will be described with particularity. The hook **68** on the left side can be otherwise identical. Hook **68** includes an anchor element **70** which is secured to the main frame **16** of the loader **12** by fasteners such as bolts **72** or by welding. A horizontally directed opening **74** is formed in a rear edge **76** of the hook **68** and includes a limiting surface **78**, an inclined guide surface **80** and a terminal portion **82**.

The over center locking assembly **62** includes a pair of over center locking mechanisms **84**, one of which is housed within each of the channel members **54** of the stabilizing arms **52**. Each over center locking mechanism **84** is movable between a locked position, wherein the lug **64** is secured in the terminal portion **82** of the associated hook **68**, and an unlocked position, wherein the lug **64** can be readily disengaged from the horizontally directed opening **74** of the hook **68**. The over center locking mechanisms **84** are mirror images of one another so only the right side locking mechanism as shown in FIGS. **3–8** will be described with particularity. The locking mechanism **84** on the left side can be otherwise identical. Locking mechanism **84** includes a locking pawl **86** pivotally attached at a first end **88** between the side walls **58** by a first pivot mount **90**. A second end **92** of the pawl **86** includes a tapered lock portion **94** that is configured to engage a notch **96** formed in a front edge **98** of the hook **68** when the locking mechanism **84** is in the locked position.

The locking mechanism **84** further includes a generally L-shaped operating lever **100** pivotally attached at a first end !02 to the side walls **58** of the channel member **54** by a second pivot mount **104**. The L-shaped operating lever includes a long first portion **106** and a shorter second portion **108** extending at an angle relative to the first portion **106**. As seen in FIGS. **1** and **3–7**, the operating lever **100** extends through an elongated opening **110** formed in the base portion **56** of the channel member **54**. As seen in FIGS. **3–6**, when the locking mechanism **84** is in the unlocked position the second portion **108** is oriented substantially vertical as it extends through the opening **110**. When the locking mechanism **84** is in the locked position as shown in FIG. **7**, a segment of the long first portion **106** is visible above the base portion **56** and the second portion **108** is oriented substantially parallel to the base portion **56** to indicate the locked position of the locking pawl **86**.

The locking pawl **86** further includes a perpendicular extension **112** extending outwardly from the first end **88**. The operating lever **100** further includes a projec-

tion **114** adjacent the second pivot mount **104**. An over center linkage **116** extends between the locking pawl **86** and the operating lever **100**. The over center linkage **116** includes a spring biased link **118**. As seen in FIG. **8**, the spring biased link **118** is defined by a chuck **120** pivotally attached by a pivot element **121** at a first end **122** to the perpendicular extension **112** of the locking pawl **86**. A rod **124** is rigidly secured to a second end **126** of the chuck **120**.

A U-shaped clevis **128** includes a bight portion **129** and a pair of outwardly extending arms **130** (see FIG. **8**). The arms **130** of the clevis **128** are pivotally attached by a pivot element **132** to the projection **114** of the operating lever **100**. The bight portion **129** of the clevis **128** includes an opening **134** (see FIG. **8**) configured to slidably receive the rod **124**. A stop pin **136** mounted transverse to the longitudinal extent of the rod **124** contacts the bight portion **129** to limit the extent to which the rod **124** can slide relative to the clevis **128**.

A compression spring **138** extends between an enlarged portion **140** of the chuck **120** and the bight portion **129** of the clevis **128**. The spring **138** biases the clevis **128** away from the chuck **120**. The chuck **120** further includes a bearing element **142** that acts as a centering guide for the compression spring **138** to align the spring **138** along the longitudinal extent of the rod **124**.

In operation, as shown in FIG. **1**, the backhoe attachment **10** is supported on a ground surface. The skid steer loader **12** is positioned so that the mounting frame **28** is closely adjacent the carrier frame **34** of the backhoe attachment **10**. The tilt cylinder **32** is then extended to rotate the mounting frame **28** away from the main frame **16** so that the bar member **50** is in position to engage the overhanging member **48** of the carrier frame **34**. From this position, the lift cylinders **26** are extended to raise the lift arms **22** and engage the bar member **50** with the overhanging member **48**, thereby forming the load bearing connection as seen in FIG. **3**. The carrier frame **34** is securely locked to the mounting frame **28** by a quick attachment device such as disclosed in the U.S. Pat. No. 3,672,521 to Bauer et al.

As seen in FIG. **4**, the lift arms **22** are raised and the mounting frame **28** is tilted rearwardly toward the operator's cab **18** by retracting the tilt cylinder **32** so as to bring the lugs **64** up and over the hooks **68**. Retraction of the hydraulic lift cylinders **26** lowers the backhoe attachment **10** until the lugs **64** engage the limiting surfaces **78** of the horizontally directed openings **74** of the hooks **68** as shown in FIG. **5**. The limiting surfaces **78** act as stops to indicate that the lugs **64** have made contact with the hooks **68**. At this time, the tilt cylinder **32** is once again extended to pivot the mounting frame **28** away from the operator's cab **18** so that the lugs **64** ride up the guide surfaces **80** and engage the terminal portions **82** of the horizontally directed openings **74** in the hooks **68** as seen in FIG. **6**.

As seen in FIG. **7**, the operating levers **100** of the over center locking mechanisms **84** are pivoted about the second pivot mounts **104**, thereby moving the locking pawls **86** from the unlocked position to the locked position wherein the tapered locked portions **94** are engaged with the notches **96** in the front edges **98** of the hooks **68**. During this movement, the compression spring **138** of the spring biased link **118** is compressed to a point where the longitudinal extent of the rod **124** is parallel to a line **144** (see FIGS. **7** and **8**) drawn from the pivot element **121** to the second pivot mount **104**. Further movement of the operating lever **100** in the same direction results in an over center action which allows the spring **138** to expand again and thereby secure the locking pawl **86** in the locked position.

To remove the backhoe attachment **10** from the skid steer loader **12** the over center locking mechanisms **84** are returned to their unlocked positions. The tilt cylinder **32** is retracted rotating the mounting frame **28** back toward the operator's cab **18** which removes the lugs **64** from the terminal portions **82** of the hooks **68**. The lift cylinders **26** are again extended to lift the lugs **64** above the hooks **68** and the tilt cylinder **32** is extended rotating the mounting frame **28** to return the carrier frame **34** to the position shown in FIG. **3**. The lift cylinders **26** are then retracted to lower the backhoe attachment **10** back to the ground and the mounting frame **28** is removed from engagement with the overhanging member **48** of the carrier frame **34**.

Although the present invention has been described with reference to preferred embodiments, workers skilled in the art will recognize that changes may be made in form and detail without departing from the spirit and scope of the invention.

What is claimed is:

1. A mounting device for attaching an implement to a pair of spaced actuating arms on an off road vehicle, comprising:

a carrier frame mounted to the implement;

a mounting frame secured to the arms for engaging the carrier frame;

a lug assembly secured to the implement;

a hook assembly secured to the vehicle for releasibly receiving the lug assembly; and

an over center locking assembly movably mounted on the implement for releasibly locking the lug assembly to the hook assembly.

2. The device of claim wherein the hook assembly includes a horizontally extending opening on a rear edge thereof.

3. The device of claim **2** wherein the opening includes:

a limiting surface;

a terminal portion; and

an inclined guide surface extending between the limiting surface and the terminal portion for directing the lug assembly into the terminal portion.

4. The device of claim **2** wherein the locking assembly includes an over center locking mechanism, including:

a pivotable pawl for engaging the hook assembly;

a pivotable operating lever; and an over center linkage coupling the lever to the pawl for moving the pawl into and out of engagement with the hook assembly.

5. The device of claim **4** wherein the hook assembly further includes a notch opposite the horizontal opening for receiving the pawl.

6. The device of claim **5** wherein the over center linkage includes a spring biased link pivotally connected to the pawl and operating lever.

7. The device of claim **6** wherein the spring biased link includes:

a clevis pivotally attached to the operating lever;

a rod pivotally attached to the locking pawl and slidably received in the clevis; and

a compression spring disposed between the rod and clevis for biasing the pawl into engagement with the hook assembly in a first lever position and out

of engagement with the hook assembly in a second lever position.

8. The device of claim **7** wherein: the hook assembly includes a pair of spaced hooks;

the lug assembly includes a pair of spaced lugs; and

the over center locking assembly includes a pair of spaced over center locking mechanisms.

9. The device of claim **8** wherein each lug includes a pin having opposite ends retained in bushings mounted to the carrier frame.

10. The device of claim **7** wherein the rod further includes a stop pin for limiting the extent the clevis can slide relative to the rod.

11. An off road vehicle comprising:

a main frame;

lift arms pivoted on the frame;

a lift cylinder connected between the frame and lift arms for raising and lowering the arms;

an accessory mounting frame pivotally attached to the lift arms;

a tilt cylinder connected between the lift arms and mounting frame for pivoting the mounting frame relative to the lift arms;

an accessory apparatus including a carrier frame for attachment to the mounting frame;

a lug assembly mounted on a rear side of the apparatus;

a hook assembly mounted on the main frame for releasibly receiving the lug assembly; and

an over center locking assembly connected to one of the accessory apparatus or vehicle, and being movable between an unlocked position permitting the lug assembly to be removed from the hook assembly, and an over center locked position locking the lug assembly in the hook assembly.

12. The vehicle of claim **11** wherein the hook assembly includes an opening directed towards the rear of the vehicle away from the apparatus.

13. The vehicle of claim **12** wherein the lug assembly includes a lug engageable with the opening of the hook assembly.

14. The vehicle of claim **13** wherein the locking assembly includes an over center locking mechanism mounted on the apparatus, including:

a moveable locking pawl for engaging the hook assembly;

a moveable operating lever; and

an over center linkage coupling the operating lever to the locking pawl.

15. The vehicle of claim **14** wherein the hook assembly includes a locking notch opposite the opening for selectively receiving the pawl.

16. The vehicle of claim **15** wherein the accessory apparatus further includes a channel for housing the locking mechanism.

17. The vehicle of claim **16** wherein the accessory apparatus further includes first and second spaced pivot axes within the channel for pivotally mounting the pawl and operating lever, respectively.

18. The vehicle of claim **16** wherein the over center linkage further includes a spring biased link pivotally connected to the pawl and operating lever.

19. The vehicle of claim **18** wherein the spring biased link includes:

a clevis pivotally attached to the operating lever;

a chuck pivotally attached to the locking pawl;

a rod rigidly attached to the chuck and slidably received in the clevis; and

a compression spring disposed between the clevis and chuck to bias the clevis out of engagement with the chuck.

20. The vehicle of claim **19** wherein the rod further includes a stop pin mounted transverse to the longitudinal extent of the rod for limiting the extent the clevis can slide relative to the chuck.

21. The vehicle of claim **19** wherein the operating lever includes a first portion and a second portion angled relative to the first portion, the second portion when generally vertically oriented indicating the unlocked position of the locking mechanism and when generally horizontally oriented indicating the locked position of the locking mechanism.

22. The vehicle of claim **12** wherein the hook assembly includes an anchor element for attaching the hook assembly to the main frame.

23. The vehicle of claim **19** wherein the accessory apparatus comprises a backhoe attachment.

24. The vehicle of claim **19** wherein the off road vehicle comprises a skid steer loader.

25. The vehicle of claim **19** wherein:

the carrier frame includes an overhanging member; and

the mounting frame includes a bar member at the top thereof which is adapted to engage the overhanging member for providing a load bearing connection between the accessory apparatus and vehicle.

26. The vehicle of claim **21** wherein:

the hook assembly includes a pair of spaced hooks;

the lug assembly includes a pair of spaced lugs; and

the over center locking assembly includes a pair of spaced over center locking mechanisms.

27. For use with an off road vehicle having a main frame with lift arms pivotally mounted thereto, a lift cylinder connected between the main frame and lift arms for raising and lowering the lift arms relative to the main frame, a mounting frame pivotally attached to the lift arms, a tilt cylinder connected between the lift arms and mounting frame for pivoting the mounting frame relative to the lift arms, a hook assembly mounted to the main frame and having a horizontally directed opening on a rear side thereof and configured to receive a implement having a carrier frame, a lug assembly and a locking assembly pivotally mounted adjacent to the lug assembly; a method for attaching the implement to the vehicle, including:

supporting the implement on the ground;

moving the vehicle to a position next to the implement with the mounting frame of the vehicle adjacent the carrier frame of the implement;

actuating the tilt cylinder in a first direction to rotate the mounting frame with respect to the lift arms;

engaging the mounting frame of the vehicle with the carrier frame of the implement;

actuating the lift cylinder in a first direction to rotate the lift arms with respect to the main frame to raise the lug assembly of the implement above the hook assembly;

actuating the tilt cylinder in a second direction to pivot the lug assembly of the implement to the rear side of the hook assembly;

actuating the lift cylinder in a second direction to rotate the lift arms relative to the main frame to lower the lug assembly of the implement into contact with the hook assembly;

actuating the tilt cylinder in the first direction to position the lug assembly of the implement in the opening of the hook assembly; and

pivoting the locking assembly in a first direction into engagement with a front side of the hook assembly to trap the hook assembly between the lug assembly and locking assembly and thereby securely fasten the implement to the vehicle.

28. The method of claim **27** wherein:

the locking assembly further includes a pivotable locking pawl for engaging the front side of the hook assembly, a pivotable operating lever and an over center linkage coupling the lever to the pawl; and

pivoting the lock assembly in the first direction includes rotating the operating lever from an unlocked position to an over center locked position.

29. The method of claim **28** and further including a method for removing the implement from the vehicle, including:

pivoting the locking assembly in a second direction out of engagement with the front side of the hook assembly to release the hook assembly from between the lug assembly and locking assembly;

actuating the tilt cylinder in the second direction to remove the lug assembly from the opening in the hook assembly;

actuating the lift cylinder in the first direction to rotate the lift arms relative to the main frame to raise the lug assembly above the hook assembly;

actuating the tilt cylinder in the first direction to pivot the lug assembly to the front side of the hook assembly;

actuating the lift cylinder in the second direction to rotate the lift arms relative to the main frame to lower the implement to the ground;

disengaging the mounting frame from the carrier frame;

actuating the tilt cylinder in the second direction to rotate the mounting frame relative to the lift arms; and

moving the vehicle away from the implement.

30. The method of claim **29** wherein:

pivoting the locking assembly in the second direction includes rotating the operating lever from the over center locked position to the unlocked position.

* * * * *

UNITED STATES PATENT AND TRADEMARK OFFICE

CERTIFICATE OF CORRECTION

PATENT NO. : 5,004,398

DATED : April 2, 1991

INVENTOR(S) : Oryn B. Wagner et al.

It is certified that error appears in the above-identified patent and that said Letters Patent is hereby corrected as shown below:

Col. 6, line 37, delete "claim", insert --claim 1--.

Signed and Sealed this

Twenty-second Day of December, 1992

Attest:

DOUGLAS B. COMER

Attesting Officer

Acting Commissioner of Patents and Trademarks