US009039344B1

(12) **United States Patent**
Marcus

(10) **Patent No.: US 9,039,344 B1**
(45) **Date of Patent: May 26, 2015**

(54) **UNIVERSAL WORK TOOL CONNECTOR DEVICE FOR SKID STEER LOADER**

(71) Applicant: **Herman H Marcus**, St. Croix, VI (US)

(72) Inventor: **Herman H Marcus**, St. Croix, VI (US)

(*) Notice: Subject to any disclaimer, the term of this patent is extended or adjusted under 35 U.S.C. 154(b) by 0 days.

(21) Appl. No.: **13/999,499**

(22) Filed: **Mar. 3, 2014**

Related U.S. Application Data

(60) Provisional application No. 61/956,685, filed on Jun. 14, 2013.

(51) **Int. Cl.**
E02F 3/36 (2006.01)

(52) **U.S. Cl.**
CPC ***E02F 3/3622*** (2013.01)

(58) **Field of Classification Search**
CPC E02F 3/365; E02F 3/3622; E02F 3/3627; E02F 3/3631; E02F 3/3618
USPC 414/723; 37/231.468; 172/272, 810, 172/811, 817; 403/43.44
See application file for complete search history.

(56) **References Cited**

U.S. PATENT DOCUMENTS

2,844,397	A *	7/1958	Du Shane	403/44
3,220,487	A *	11/1965	Pilch	172/274
3,719,377	A *	3/1973	Schultz et al.	403/44
3,923,220	A *	12/1975	Marcyan	224/547
4,071,105	A *	1/1978	von Allworden	180/14.4
4,241,935	A *	12/1980	Vollmer et al.	172/272
4,360,980	A *	11/1982	Jarvis	37/404
4,986,722	A *	1/1991	Kaczmarczyk et al.	414/723
5,520,500	A *	5/1996	McIlwain et al.	414/685
6,499,934	B1 *	12/2002	Kaczmarski et al.	414/723
6,655,468	B2 *	12/2003	Casali et al.	172/439
6,701,630	B2 *	3/2004	Humphrey	37/403
7,364,181	B2 *	4/2008	Patterson	280/504
8,240,970	B2 *	8/2012	Bricker et al.	414/723
2004/0042888	A1 *	3/2004	Westendorf et al.	414/723
2004/0067126	A1 *	4/2004	Schmidt	414/723
2008/0025830	A1 *	1/2008	Pielmeier et al.	414/723

* cited by examiner

Primary Examiner — Joshua Kennedy

(57) **ABSTRACT**

A connector device enables universal compatibility and interchangeability between any work tool accessory having a boom feature and any skid steer loader as well as controlled support of the work tool accessory. The connector device also prevents machine instability issues.

13 Claims, 13 Drawing Sheets

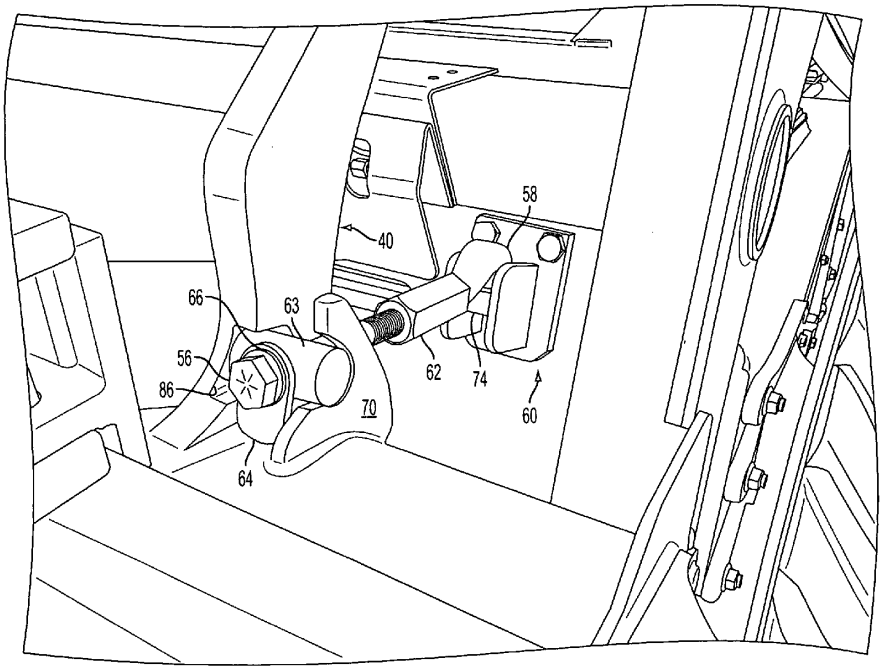

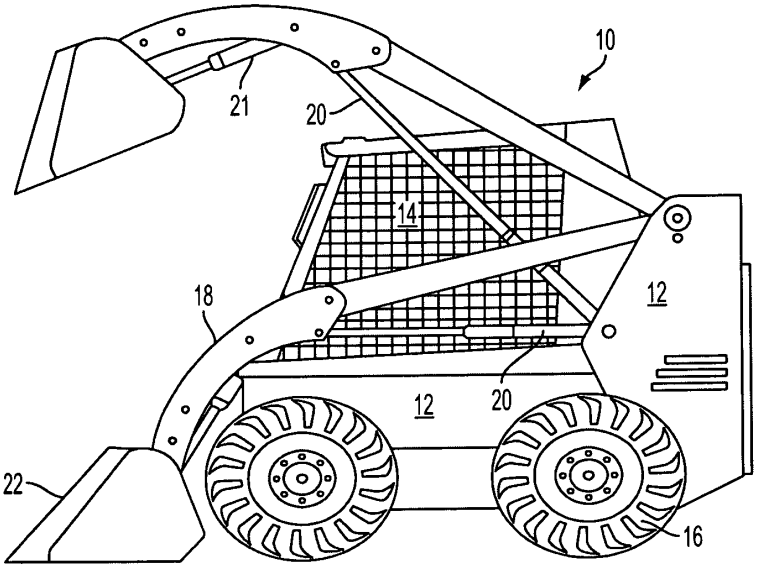

FIG. 1
PRIOR ART

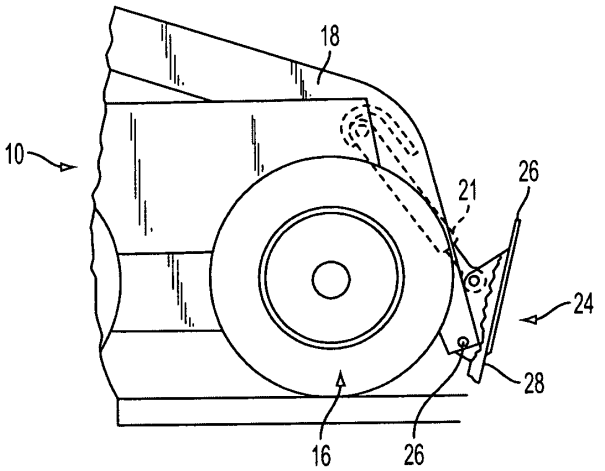

FIG. 2
PRIOR ART

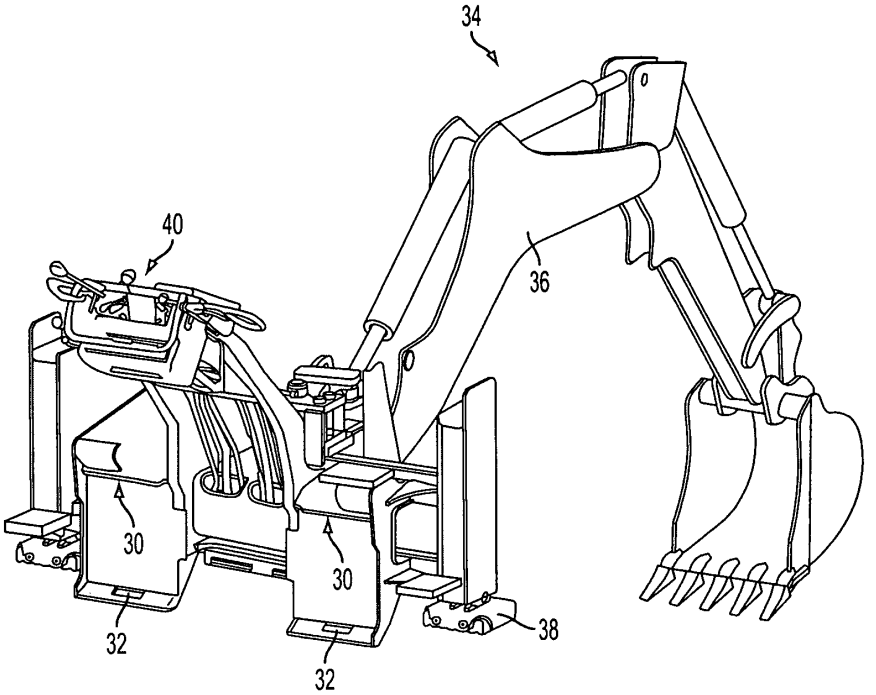

FIG. 3
PRIOR ART

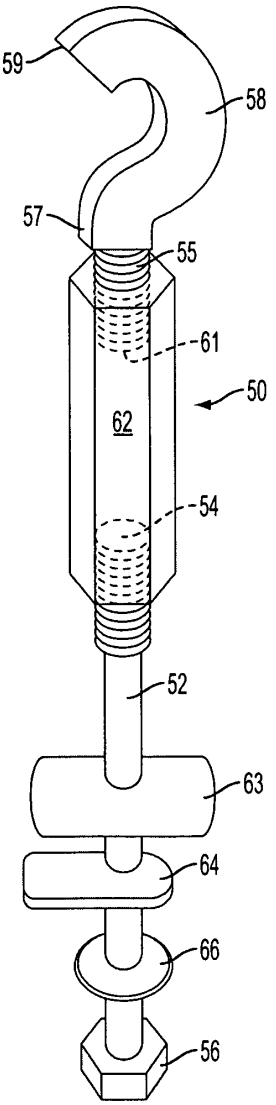

FIG. 4

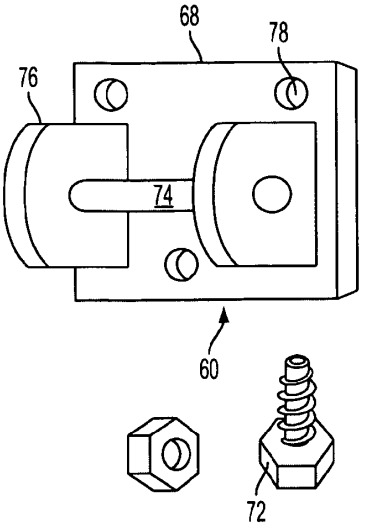

FIG. 5A

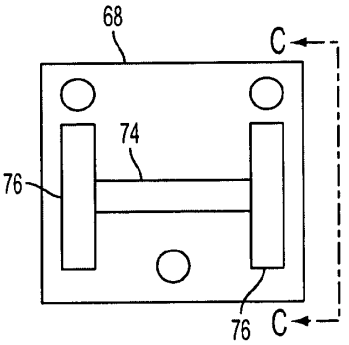

FIG. 5B

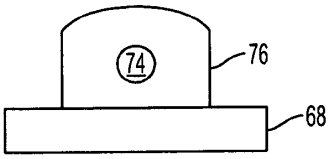

FIG. 5C

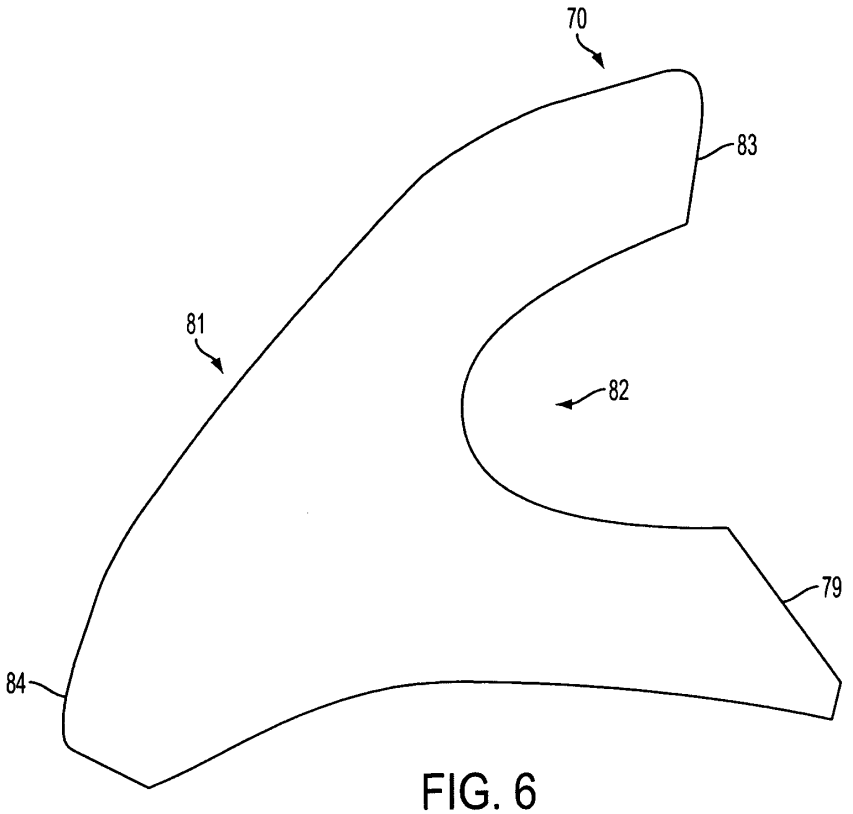

FIG. 6

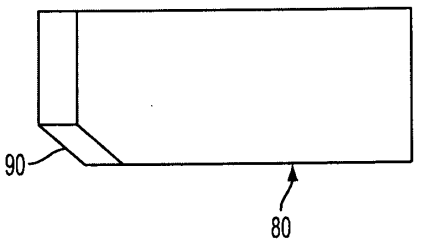

FIG. 7

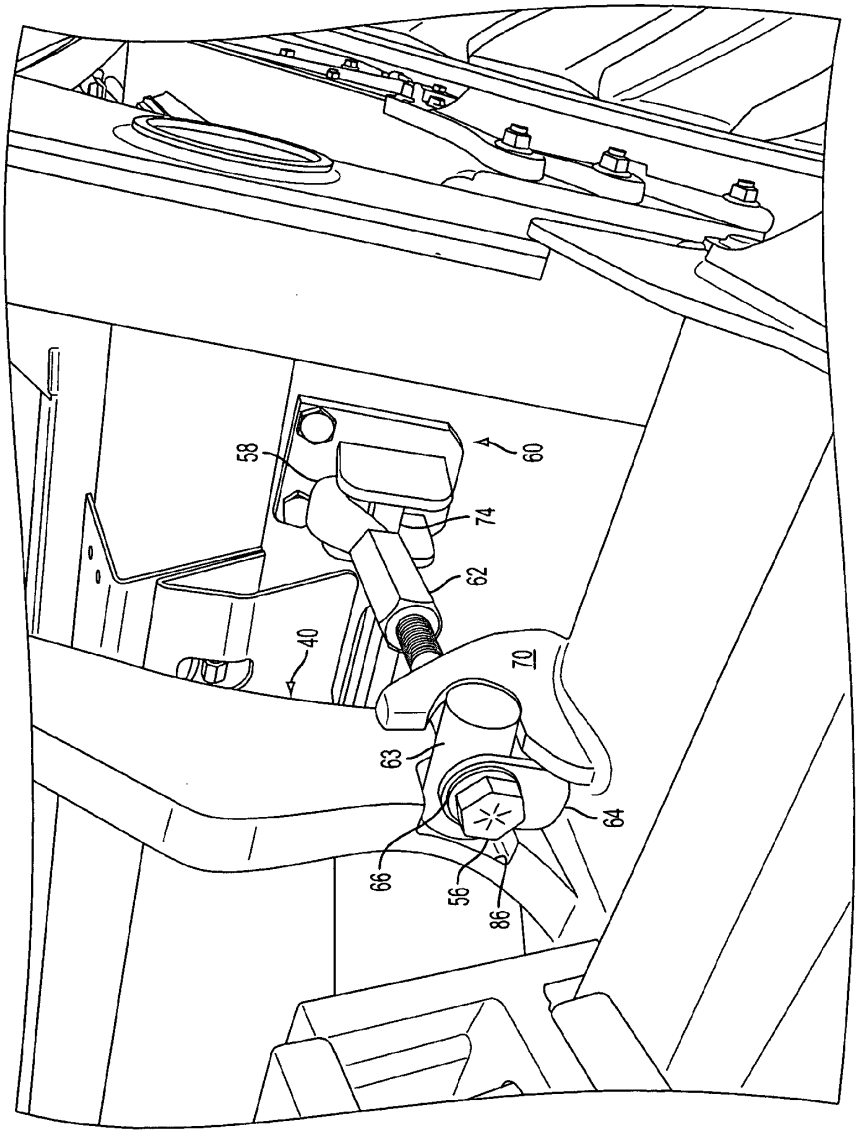

FIG. 8

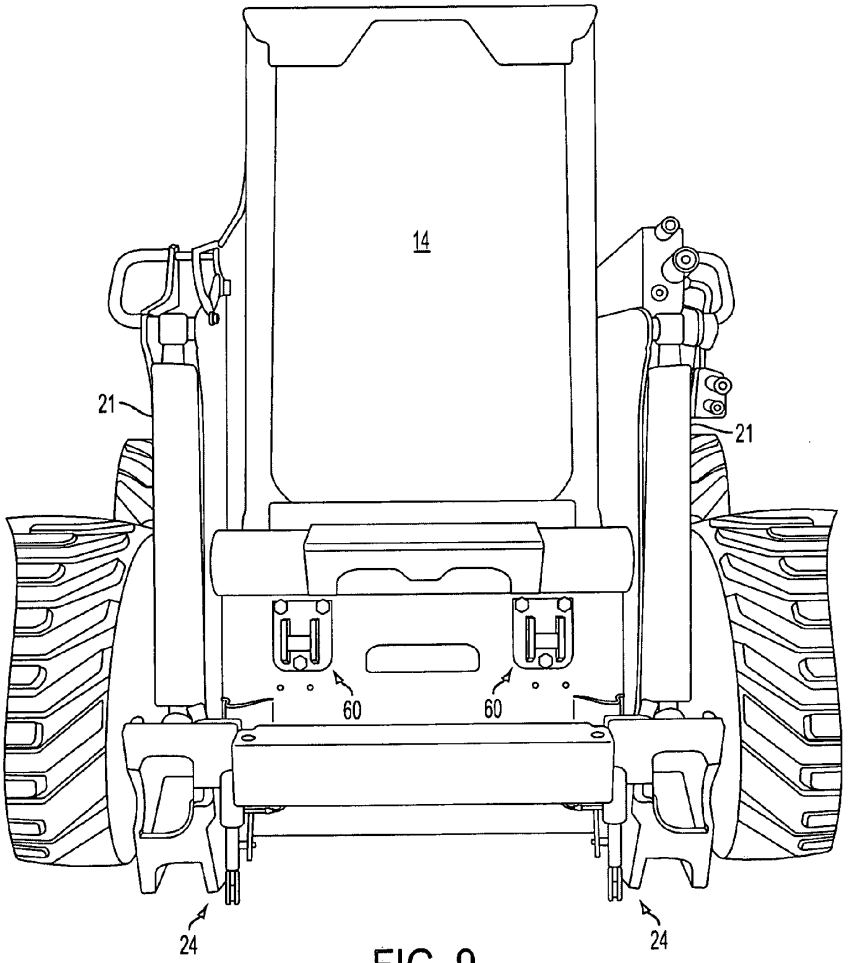

FIG. 9

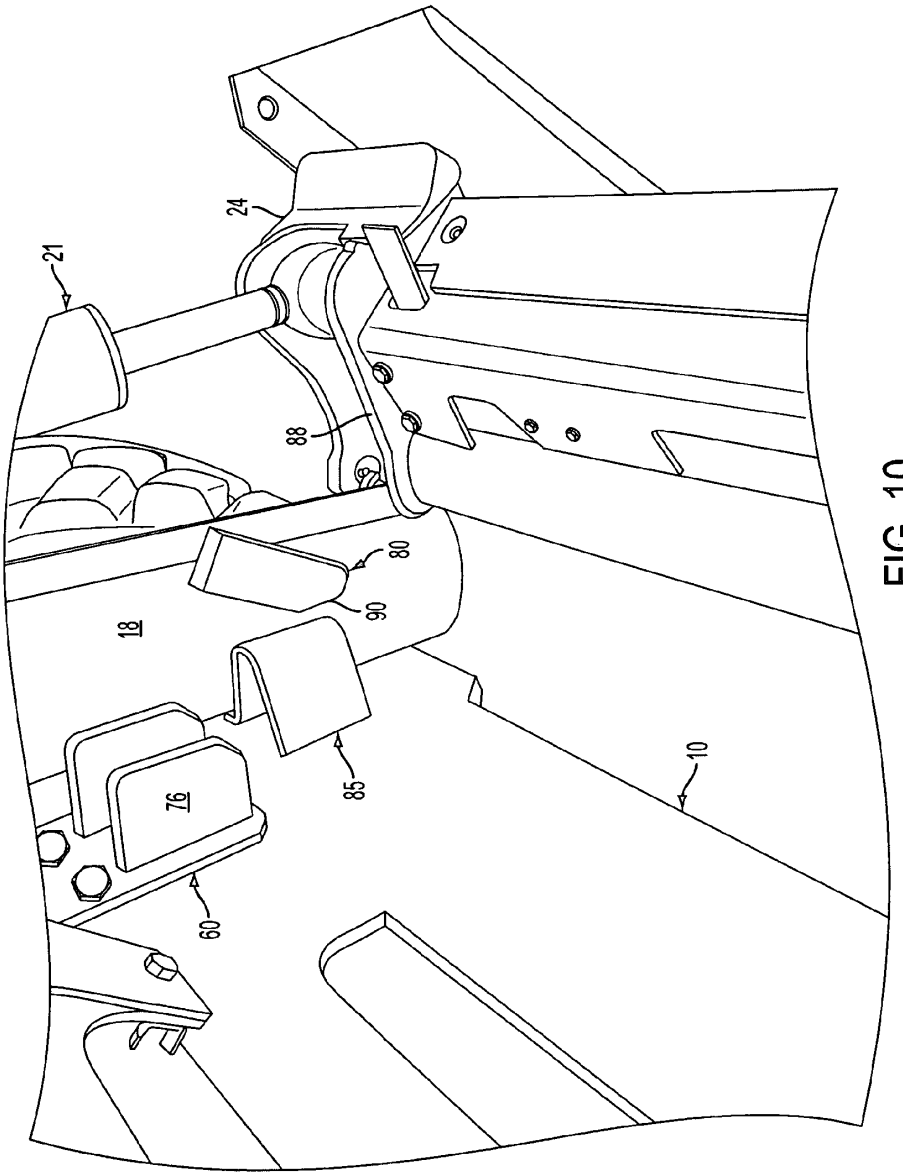

FIG. 10

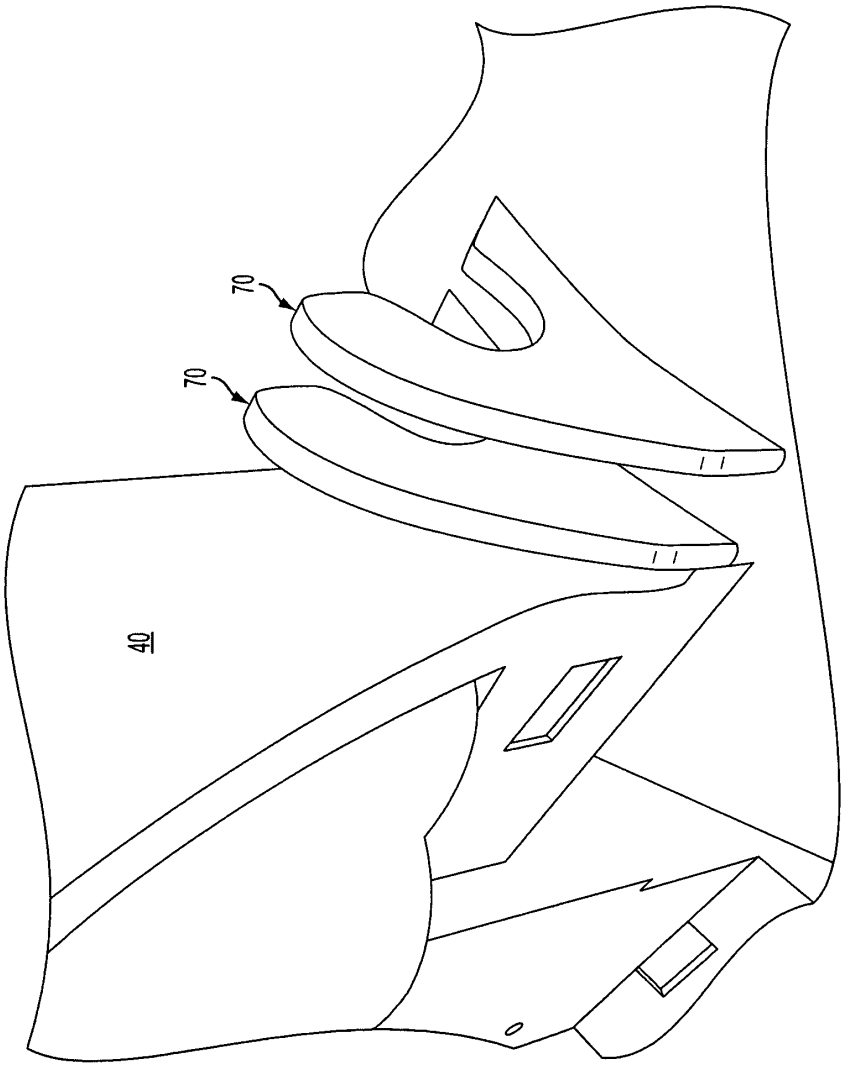

FIG. 11

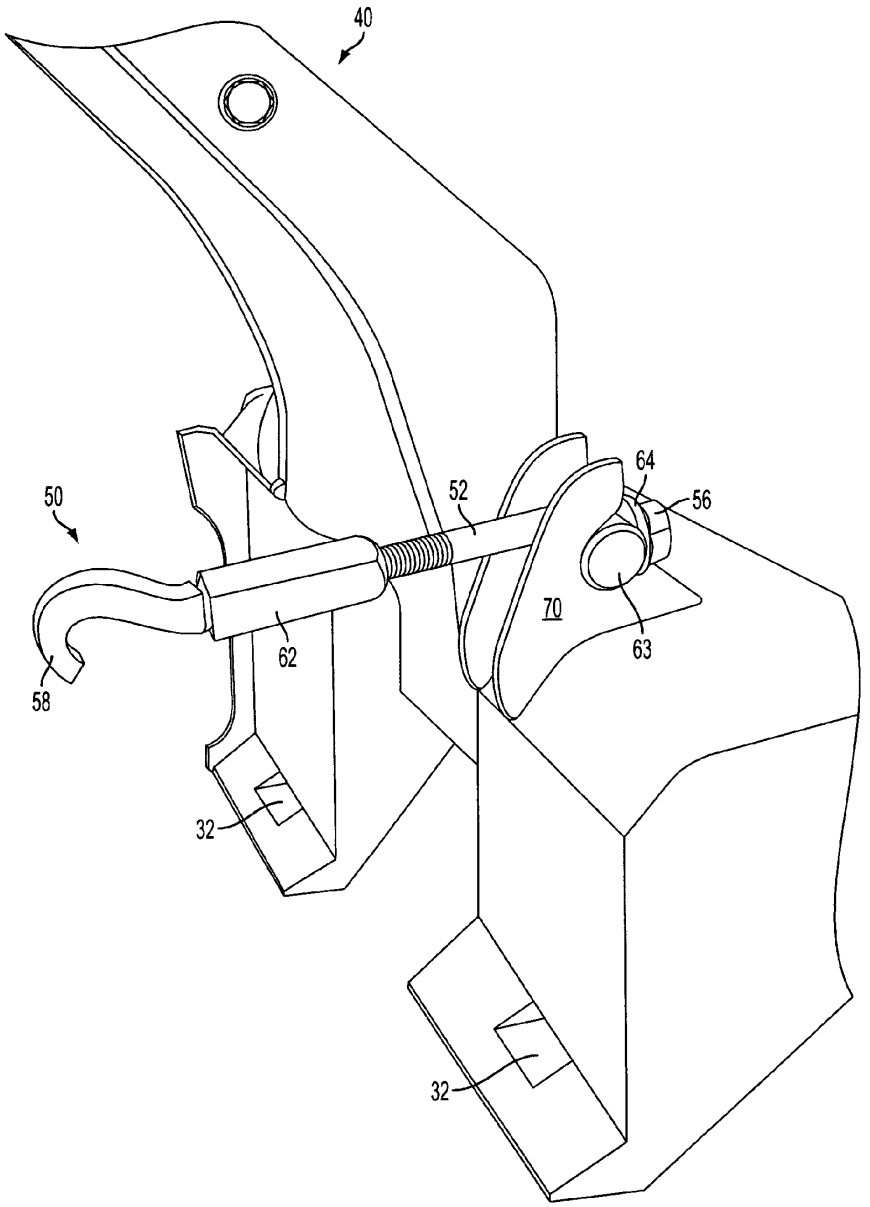

FIG. 12

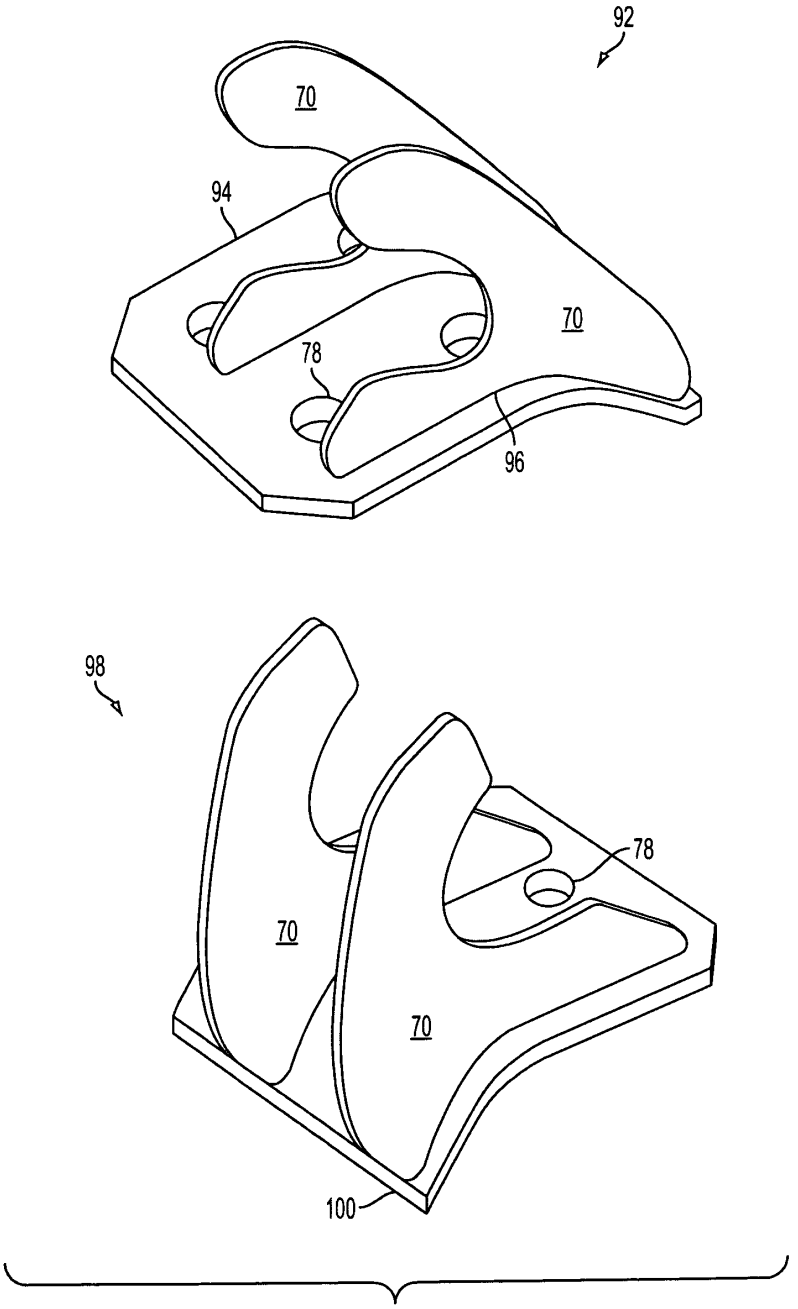

FIG. 13A

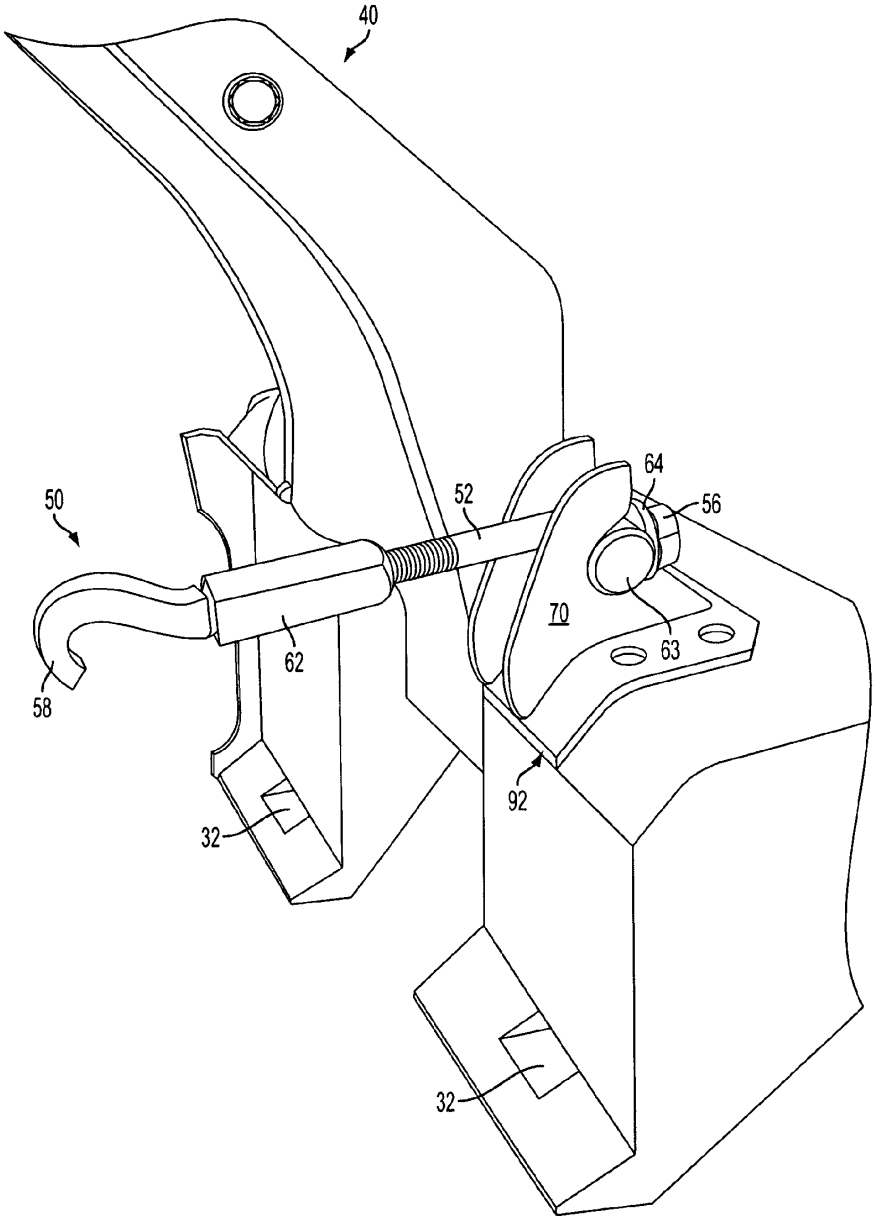

FIG. 13B

UNIVERSAL WORK TOOL CONNECTOR DEVICE FOR SKID STEER LOADER

RELATED APPLICATION

This application claims priority from U.S. Provisional Application No. 61/956,685 filed on Jun. 14, 2013, which is incorporated herein by reference.

FIELD OF THE INVENTION

The present invention relates generally to connectors useful for attaching accessory apparatus to earth moving machinery. More specifically, the present invention is directed to a connector device usable to attach an incompatible work tool accessory to an earth moving off road vehicle without machine instability.

BACKGROUND OF THE INVENTION

There are a number of earth-moving machines in the construction and mining industries today. One of the most popular earth-moving machinery is the skid steer loader because it is compact, very maneuverable and its lift arms are usable to attach many different labor saving work tool attachments. Skid steer loaders are also highly desirable because of its favorable weight ratio balance, which is achieved by locating the engine at the rear of the machine, and the load (or work tool attachment) at the front of the machine.

Generally, skid steer loaders have a frame that is moved by independently driven wheels on opposite sides of the vehicle so that by turning the left and right wheel pairs (on each side of the machine) at different speeds and in different directions, the machine turns by skidding across the ground.

In Prior Art FIG. **1**, the skid steer loader **10** has a main body frame **12**, which includes an operator compartment **14**, that is moved by a pair of right and left wheels **16** located on opposite sides of the frame **12**. A pair of lift arms **18** is pivotally mounted to the machine's frame **12** on opposite sides of the operator's compartment **14**. Each lift arm **18** is equipped with a hydraulic lift cylinder **20** that raises and lowers the lift arm **18** in a vertical direction as desired.

As depicted in Prior Art FIG. **1**, a work tool accessory in the form of a bucket **22** is attached to the lift arms **18**. This attachment is accomplished by a work tool accessory mounting frame or coupler **24** illustrated in Prior Art FIG. **2**. The work tool accessory coupler **24** is pivotally connected at **25** to a distal end of each lift arm **18**. Each lift arm **18** is equipped with a hydraulic tilt cylinder **21**, which is also attached to the work tool accessory coupler **24** as shown. As constructed, actuation of hydraulic tilt cylinder **21** causes the coupler **24** to tilt or retract backwards and forwards, away from and towards lift arm **18**.

At its upper and lower regions, the work tool accessory coupler **24** is constructed with a lip **26** and locking pin **28**, respectively, both of which fits matingly into corresponding upper and lower regions, respectively, of a work tool accessory attachment surface, that allows bucket **22** to be attached to the distal end of each lift arm **18**, as shown in Prior Art FIG. **1**.

Different types of work tool accessories are interchangeably attached and released from the machine **10**. For this reason, a functional appeal of skid steer loaders is the ability to use a wide variety of work tool accessories or attachments for a variety of different uses. These work tool accessories or attachments are often powered by the loader's hydraulic system and include, for example, excavators, earth augers, specialized buckets, hydraulic breakers, snow blowers, trenchers, cement mixers, rippers, backhoes, pallet forks, wheel saws, etc.

In the illustration shown in Prior Art FIG. **3**, the work tool accessory is in the form of a backhoe **34**. As depicted, the attachment surfaces **30**, **32** of the backhoe **34** is configured to fit lip **26** and pin **28** in the corresponding upper and lower regions, respectively, of the work tool accessory coupler **24** in Prior Art FIG. **2**.

The upper region of the work tool accessory coupler **24** that is constructed with a lip **26** (Prior Art FIG. **2**), for instance, fits matingly into a flange portion **30** (Prior Art FIG. **3**) located in an upper region of the attachment surface of work tool accessory **34**. Similarly, the lower region of work tool accessory coupler **24** that is constructed with a locking pin **28**, is matingly fitted into aperture **32** located in a lower region of the attachment surface of work tool accessory **34**. Once these mating connections are made, the work tool accessory **34** in Prior Art FIG. **3**, like bucket **22** in Prior Art FIG. **1**, is connected to the skid steer loader **10**.

However, unlike the attachment of a compact tool like bucket **22** in Prior Art FIG. **1** to the skid steer loader **10**, attachment of any work tool accessory **34** having a boom feature **36**, as shown in Prior Art FIG. **3**, to any skid steer loader **10** causes undesirable and unwanted machine instability even when a pair of stabilizers **38**, on opposite sides of the boom feature **36** via work tool accessory **34**, are employed. Machine instability is caused by a number of factors including, for example, high stress load of the boom feature **36** on the skid steer loader machine **10** such as during operation. The non-compact nature of the boom feature **36** causes another problem—undesirable forward tipping of the skid steer loader **10** in the direction of the boom feature **36**, which is attached at the front or forward end of the loader machine **10**. Uncontrollable or unsteady boom feature **36** support is a persistent and pervasive problem when the work tool accessory **34** manufactured by one company is attached to a skid steer loader **10** manufactured by a different company. The complex arrangement of spring locking mechanisms needed to secure the boom feature to the mounting frame is yet another typical problem.

SUMMARY OF THE INVENTION

The present invention solves these and other problems through the use of a connector device that is simplistic in design, does not employ any spring mechanism, and does not require complicated connection to the lift arms of the skid steer loader machine.

In fact, the connector device of the present invention is durable, accommodates high stress loads, and prevents forward tipping and other machine instability issues. In addition, it is easy to install/remove safely and quickly, and ensures controlled support of the work tool accessory to the skid steer loader as well as work tool accessory compatibility. Indeed, the connector device of the present invention is universal in its application to connect any combination of skid steer loader machine to any work tool accessory having a boom feature without regard to whether the machine or work tool accessory is manufactured by different companies. All of the above translates into human and equipment time savings as well as health and cost savings due to, for example, universal equipment compatibility and interchangeability, minimum equipment downtime, danger-free installation and removal in a safe, convenient manner, and the like.

In a preferred embodiment, the present invention comprises an anchor pad, stop pad, anchor hook assembly and one

or more c-shaped hooks, all made of high-strength steel to withstand the high and/or reciprocating stresses of the equipment involved. A pair of anchor pads is preferably fixedly attached to the front end frame of the loader machine, inside each lift arm and below the operator's compartment, one on the left and the other on the right. Each anchor pad is preferably in positional alignment for appropriate connection with the hook(s) attached to the work tool accessory. Each anchor pad is shaped to receive a curved hook of the anchor hook assembly.

Preferably, each anchor pad comprises an anchor plate, a pair of flanges and a pin. The flanges are substantially solid and rectangular in shaped, with semi-circularly rounded corners, and are positioned on opposite sides of the anchor plate. Each anchor plate is securely attached to the front end of the loader machine by fasteners, which apertures are preferably positioned one above each flange, and one along the lower edges of the flanges and below the pin approximately at the center. The pin, which may be formed as one element with the flanges and/or anchor plate, is nevertheless fixedly secured to the flanges through the center of both flanges such that the hook in the anchor hook assembly is securably attached to the pin between the flanges.

The stop pad, which is approximately rectangular in shape except for one corner, is preferably a solid block of high strength steel dimensioned to substantially, for example, absorb vibrational stresses caused by the tilt cylinder, resist the breakout force of the work tool accessory including those having a boom feature, overcome undesirable shaking, alleviate unwanted lateral movement, reduce equipment wear and tear, withstand reciprocating and/or vibrational and/or high loads and stresses, and the like.

Preferably, the stop pad is fixedly attached near a distal end on each lift arm in an angular position, which substantially prevents a rear surface of the coupler from retracting. As such, stop pad serves as a backstop or an additional support to backstop the coupler from further retracting movement in the direction towards the lift arm. In a preferred embodiment, the length of the stop pad covers a substantial length of the rear surface of the coupler that it backstops. By this design and arrangement, the stop pad serves to substantially eliminate slack between the skid steer loader and the work tool accessory especially during operation.

As to the one or more c-shaped hooks of the present invention that is preferably attached in alignment to a top surface of the work tool accessory, in a way that positions the open space of the hook towards the boom feature of the work tool accessory, the size of the open space of the hook substantially accommodates the contouring shape of the cylindrical pin for the anchor hook assembly. In addition, each hook is sized for strength to withstand high reciprocating and/or vibrational stress and loads generally associated with a work tool accessory having a boom feature.

As such, in a preferred embodiment of the invention, each hook's configuration in the general form of a "c" comprises a base portion, rear, sloping back region, width, and bottom substantially overcoming a maximum breakout force of the work tool accessory by, for example, a generally wide and thick base portion from front to rear below and behind the open space of the hook; a back region sloping upwardly from the rear to a top point of its "c" shape; a back region which slope inclines at each point between zero and 90 degrees between the hook's rear and a top point of its "c" shape; a width, which extends from the front to the rear and below the hook's open space (also bottom), that generally decreases from the bottom of the hook upwardly to a top point of its "c" shape (top); the hook's rear, which slope declines approximately at each point between zero and 90 degrees or, alternatively, which slope inclines approximately at a rate greater than the incline of sloping back region; a substantial portion of the base portion of the hook extends approximately beyond a beginning of the "c" shape configuration of the hook; the slope of the base portion declines approximately at each point between zero and 90 degrees.

Each hook, along the width of the hook, is preferably fixedly attached to a top surface of the work tool accessory, preferably in the vicinity of each side of the support base of the control panel. In this regard, one hook may be attached employing a cut-out in the control panel to receive the cylindrical pin of the anchor hook assembly, or a pair of hooks may receive the cylindrical pin in their open spaces on either side of the control panel.

Preferably, the pair of hooks comprises a first part, which includes two hooks fixedly secured in spaced relation to each other on one hook plate, for one side of the control panel, and a second part, which includes two hooks fixedly secured in spaced relation to each other on another hook plate, for the other side of the control panel. The hooks are as earlier described, and in the first and second parts may be formed as one element with the hook plate or as separate elements preferably secured through the use of an electrode suited to weld the materials loader machines and work tool accessories are made of, preferably with a minimum yield strength of approximately 68,000 psi and a tensile strength of approximately 78,000 psi.

Preferably, the first part and second part of the pair of hooks operate in complement with the work tool accessory, such as the control panel. For example, for the first part, while the pair of c-shaped hooks are in spaced relation to each other on the hook plate in such a way that the open space of each hook is facing the boom feature of the work tool accessory, one of the hooks is positioned nearest the left side edge of the hook plate, such as approximately one-half inch from the left edge of the hook plate. Preferably one or more apertures, to the right of this hook, is spaced alongside the width of the left-edge hook. As the second hook is already in spaced relation to the left-edge hook, in order to accommodate the cylindrical pin, accordingly another one or more apertures is spaced to the right thereof.

For the second part, one of the two hooks is positioned nearest the right edge of the hook plate, such as approximately one-half inch from the right side edge of the hook plate. Preferably one or more apertures, to the left of this hook, is spaced alongside the width of the right justified hook, as are the one or more apertures spaced adjacent the right of the second hook thereof.

The left justified configuration of the first part and the right justified configuration of the second part of the pair of hooks operates complementarily with the control panel of the work tool accessory in that placement of the left justified hook configuration of the first part complements the left hand side of the control panel, and placement of the right justified hook configuration of the second part complements the right hand side of the control panel.

In addition, this configuration and arrangement of the first and second parts of the pair of hooks significantly reduces cost, time, human effort and health dangers because in part it provides universal boom feature compatibility and interchangeability with minimum machine downtime in a safe, easy convenient way.

As will be discussed in more detail later, the anchor hook assembly of the present invention preferably comprises one of an adjusting bolt, hex nut, anchor hook, cylindrical pin and washer assembly. The anchor hook assembly is elongated in

design and has two ends. In a preferred embodiment, one end comprises an anchor hook in the shape of a "c" that is threadedly attached to an elongated adjusting bolt, which has at its other end, a solid cylindrical pin, lock washer and a bolt head. Intermediate of both ends of the anchor hook assembly is an elongated hex nut, which is threadedly attached onto the adjusting bolt and the anchor hook. The anchor hook assembly is preferably made of alloy steel with a zinc finish designed to reduce corrosion.

The present invention is designed to withstand the maximum total machine rated capacity, which includes the rated operating loads for the lightest and heaviest skid steer loader machines. In a preferred embodiment, the present invention withstands the heaviest skid steer machine equipped with a work tool accessory having, for example, a boom, control panel, stick, stabilizer and a heavy duty bucket or backhoe.

There has been thus outlined, rather broadly, a summary of the invention in order that a detailed description thereof that follows may be better understood, and in order that the present contribution to the art may be better appreciated. There are, of course, additional aspects of the invention that will be described hereinafter and which will perform the subject matter of the claims appended thereto.

In this respect, before explaining an embodiment of the invention in detail, it is to be understood that the invention is not limited in its application to the details of construction and to the arrangements of the components set forth in the following description or illustrated in the drawings. For example, terms such as "horizontal", "vertical", "side", "top", "bottom", "upper", "lower", "left", "right", "width", "length", and the like, are used merely to describe a point of reference and does not necessarily limit the invention to any specific orientation. In a similar fashion, references to singular forms, such as "an", "the", "a", for example, do not necessarily denote a limitation of quantity as used in the specification and claims, but rather denotes the presence of at least one of the referenced items, components or elements unless indicated otherwise. Also, it is to be understood that the phraseology and terminology employed herein are for the purposes of description and should not be regarded as limiting.

As such, those skilled in the art will appreciate that the conception, upon which this disclosure is based, may readily be used as a basis for the designing of other structures, methods and systems for carrying out the several aims of the present invention. It is important, therefore, that the claims be regarded as including such equivalent constructions insofar as they do not depart from the spirit and scope of the present invention.

BRIEF DESCRIPTION OF PREFERRED EMBODIMENTS

Prior Art FIG. **1** is a side view of a conventional skid steer loader machine showing raised and lowered positions of its lift arms.

Prior Art FIG. **2** is a side view of a conventional skid steer loader showing a mounting frame.

Prior Art FIG. **3** is an angle view of a conventional work tool accessory having a boom feature.

FIG. **4** is the anchor hook assembly component of the connector device of the present invention according to a preferred embodiment.

FIGS. **5**A, **5**B and **5**C are an angular, front and side views of the anchor plate of the connector device of the present invention according to a preferred embodiment.

FIG. **6** is a side view of the hook component of the connector device of the present invention according to a preferred embodiment.

FIG. **7** is an angular view of the stop pad of the connector device of the present invention according to a preferred embodiment.

FIG. **8** is an illustration of an exemplary installation of the anchor hook assembly, anchor plate and hook of the connector device of the present invention according to a preferred embodiment.

FIG. **9** is a front view of an exemplary installation of a pair of anchor plates of the connector device of the present invention according to a preferred embodiment.

FIG. **10** is an angular view of an exemplary installation of the stop pad of the connector device of the present invention according to a preferred embodiment.

FIG. **11** is a partial angle view of an exemplary illustration of two hooks of the connector device of the present invention according to a preferred embodiment.

FIG. **12** is a full angle view of an exemplary installation of a pair of hooks coupling one end of the anchor hook assembly of the connector device of the present invention according to a preferred embodiment.

FIG. **13**A is an angle view of the first part and second part of an exemplary pair of hooks of the connector device of the present invention according to a preferred embodiment.

FIG. **13**B is a full angle view of an exemplary installation of the first part of a pair of hooks coupling one end of the anchor hook assembly of the connector device of the present invention according to a preferred embodiment.

DETAILED DESCRIPTION OF PREFERRED EMBODIMENTS

The connector device of the present invention comprises several elements or components including one or more anchor hook assembly **50**, anchor pad **60**, hook **70** and stop pad **80** that stably couples and/or anchors any work tool accessory **34** having a boom feature **36** to any skid steer loader **10**.

Referring to the figure drawings wherein like reference numerals indicate like elements, there is shown in FIG. **4** an anchor hook assembly of the connector device according to a preferred embodiment.

The anchor hook assembly **50** of the present invention comprises several components. One such component is a single adjusting end stud bolt **52**. In a preferred embodiment, adjusting bolt **52** is made of quenched and tempered medium carbon alloy steel having a proof load of approximately 120,000 pounds per square inch (psi), a minimum yield strength of approximately 130,000 psi, and a minimum tensile strength of approximately 150,000 psi. Generally, proof load refers to the axial tensile load that the product or material must withstand without evidence of any permanent set; yield strength refers to the maximum load at which a material exhibits evidence of permanent deformation; and tensile strength refers to the maximum load in tension (pulling apart) that a material can withstand before breaking or fracturing.

Bolt **52** is preferably a grade 8 strength SAE steel bolt with a diameter measuring one inch, configured to withstand the pulling power and reciprocating stresses of a skid steer loader **10** and work tool accessory **34** having a boom feature **36**.

In a preferred embodiment, adjusting bolt **52** measures at least approximately eight inches in length, not including hexagonal bolt head **56**, and is preferably marked with six radial lines. Its maximum length varies, depending, for example, on the coupled distance between a loader machine **10** manufac-

tured by one company and the work tool accessory **34** having a boom feature **36** manufactured by the same or different company.

The length of bolt **52** ranges in measurement from approximately eight to sixteen inches, as desired, depending on the connectional distance between anchor pad **60**, which is preferably positioned on the skid steer loader **10**, and hook **70**, which is positioned on a top surface of the work tool accessory **34**, after the loader machine **10** and the work tool accessory **34** having a boom feature **36** are coupled together via coupler **24**. If additional bolt length is desired or necessary, it is preferable to increase the length of the non-threaded portion of bolt **52** rather than increase its thread length so as not to diminish the strength of bolt **52**.

One end **54** only of adjusting bolt **52** is threaded. The remaining portion of bolt **52** is non-threaded and its non-threaded end has a hexagonal bolt head **56**. End **54** is depicted in dashed lines to indicate its hidden threaded view inside an elongated hex nut **62**. In a preferred embodiment, bolt **52** is coarsely threaded from end **54** inwardly, towards its non-threaded portion, and its thread length ranges from approximately two and three-quarter inches to three and three-quarter inches to facilitate appropriate axial adjustments of the adjusting bolt **52** along hex nut **62**. Preferably, the thread length of adjusting bolt **52** depends on the connectional distance between anchor pad and hook **70**, with a thread count of approximately nine threads per inch, or desired pitch and thread angle.

In a preferred embodiment, end **54** of adjusting bolt **52** is matingly threaded into a hex nut **62**. Hex nut **62** is preferably made of high strength steel and measures a minimum range of approximately four and one-half inches to ten inches in length, again, depending on the coupled distance between anchor pad **60** and hook **70**. In one application of the present invention where, for example, adjusting bolt **52** is a Grade 8 strength SAE steel bolt measuring approximately eight inches long, having an approximate thread length of two and three-quarter inches at nine threads per inch at end **54**, and a diameter measuring approximately one inch, hex nut **62** is approximately four and one-half inches long.

Yet another component of the anchor hook assembly **50** is an anchor hook **58**, preferably in the shape of a "c", which using coarsely threaded element **55**, is threadedly attached to hex nut **62**. Like end **54** of adjusting bolt **52**, end **61** of element **55** is matingly threaded into hex nut **62**. In addition, end **61** is depicted in dashed lines to indicate its hidden threaded view inside of hex nut **62**.

In a preferred embodiment, anchor hook **58** and threaded element **55** are formed as one component also made of high strength steel. The length of element **55** that is available for threading into hex nut **62** ranges between approximately two and one-half inches to three and one-half inches, culminating at end **61**. Regarding the length of hook **58**, it is approximately four and one-quarter inches long, measuring from the bottom of its base portion **57** to a top surface of its "c" curvature. As depicted, the beginning of the "c" shape configuration of hook as at point **59** is sufficiently overhanging in order to facilitate a secure strength hooked connection onto pin **74** in anchor pad **60** without unfastening. Also, anchor hook **58** is preferably approximately one inch thick along its entire "c" shaped curvature including into its base portion **57**. Again, anchor hook **58** and threaded element **55** withstand the pulling forces, among other stresses and load, involved between the loader machine **10** and the work tool accessory **34** having a boom feature **36**.

Alternatively and optionally, hook **58** and threaded element **55** may be two separate components where threaded element **55** is fixedly attached to anchor hook **58** at its base portion **57**. The fixed attachment may be in the form of threading, welding or the like. Preferably here, between approximately two to three inches of element **55** is fixedly attached to the base portion **57** of anchor hook **58**, and between approximately two to three inches of element **55** is fixedly attached to hex nut **62** via end **61**, to withstand the pulling power, among other forces, involved between the loader machine **10** and the work tool accessory **34** having a boom feature **36**.

Yet another component of the anchor hook assembly **50** is a cylindrical pin **63**, which is preferably located between the threaded portion of adjusting bolt **52** and bolt head **56**. In a preferred embodiment, cylindrical pin **63** is a solid, tubular shaped pin made of high strength steel that slides axially along the diameter of adjusting bolt **52**. The length of cylindrical pin **63**, which is perpendicular to adjusting bolt **52**, is preferably between the range of approximately three and one-half inches to five inches, and its diameter is preferably between the range of approximately one and three-quarter inches to two inches.

Importantly and preferably, the axial areas of cylindrical pin **63** immediately adjacent to and on opposite sides of the diameter of adjusting bolt **52**, are supported to withstand the pulling forces and/or reciprocating stresses caused by the work tool accessory **34**. For example, in FIG. **8**, these axial areas of cylindrical pin **63** are preferably supported on the one side by hook **70**, and on the other side in the base portion of control panel **40** via cut-out **86**. Similarly in FIGS. **12** and **13**B, for example, the axial areas of cylindrical pin **63** immediately adjacent to and on opposite sides of the diameter of adjusting bolt **52**, are preferably supported on both sides by a pair of hooks **70** via the open spaces **82** of those hooks **70**. In the embodiments depicted in FIGS. **8**, **12** and **13**B, for instance, a preferred support distance of these axial areas of cylindrical pin **63**—namely the axial areas of cylindrical pin **63** immediately adjacent to and surrounding the diameter of adjusting bolt **52**—is the approximate size of the lock washer **64**, which is approximately two inches.

In one application, cylindrical pin **63** is approximately three and one-half inches long with a diameter of approximately one and three-quarter inches of solid high strength steel, except for the one-inch diameter hole therethrough that accommodates adjusting bolt **52**. In addition, cylindrical pin **63** is preferably sized or shaped to fit matingly into open space **82** of hook **70**, and vice versa.

Adjacent to cylindrical pin **63** in FIG. **4**, and another component of the anchor hook assembly **50**, is a washer assembly **64**, **66**, also located on the unthreaded portion of adjusting bolt and preferably in the vicinity of bolt head **56**. Washer assembly **64**, **66** comprises one or more types or kinds of washers designed to prevent loosening due to vibration and dynamic loads.

In a preferred embodiment, washer assembly **64**, **66** takes the form of an unthreaded wedge lock washer assembly **64**, **66** where wedge washer **64** is used in back-to-back relation with a plain or flat washer **66**. In facial engagement with each other and bolt head **56**, assembly **64**, **66** exhibits vibration resistant qualities by resisting vibrational and/or dynamic load loosening of cylindrical pin **63** from open space **82** in hook **70**. Also preferably made of high strength alloy steel, lock washer assembly **64**, **66** achieves desired wedge and axial tensile strengths to withstand equipment pulling forces involved.

As to dimensions, washer assembly **64**, **66** is appropriately sized to accommodate the connectional spacing involving the assembly **64**, **66**, cylindrical pin **63**, hook **70** and, to some degree, bolt head **56**. In a preferred embodiment, wedge lock

washer **64** is generally rectangular on the bottom end having rounded corners, and semi-circularly round on the top end. Wedge lock washer **64** is appropriately sized to substantially prevent, among other things, lateral movement of cylindrical pin **63**.

Wedge lock washer **64**, which has opposing flat faces on either side, is approximately three-eighths of an inch in thickness, and accommodates the one-inch diameter of adjusting bolt **52** near its semi-circularly rounded top end. The majority of its remaining approximately three inch length is sized and shaped to form a wedge on its rectangular-shaped bottom end, against the top surface of the work tool accessory **34**, that substantially locks cylindrical pin **63** into hook **70** (see FIG. **8**). Preferably, wedge lock washer **64** is approximately two inches wide and is also made of high strength steel. Washer **66** also slides axially along adjusting bolt **52**.

Anchor pad **60**, in FIGS. **5**A, **5**B and **5**C, preferably comprises an anchor plate **68**, a pin **74**, and a pair of flanges **76**. By design, anchor pad **60** is configured for secure connection onto the front end of the loader machine **10** via two or more fasteners **72**, and for secure hooking connection by the c-shaped anchor hook **58** of the anchor hook assembly **50**.

As illustrated in the preferred embodiment depicted in FIG. **5**A, anchor plate **68** includes two solid flanges **76** with semi-circularly rounded corners, facing each other and spaced on opposing sides of the plate **68**. Preferably, flange **76** is approximately four inches high by four inches wide, except for the rounded corners, and approximately one-half inch thick.

A pin **74**, such as a dowel pin shown in FIGS. **5**A, **5**B and **5**C, preferably having a diameter of approximately one and one-quarter inches and approximately three inches in length, fixedly attaches both flanges **76** approximately through the center of both flanges **76** such that anchor hook **58** is securably attachable to pin **74** between flanges **76**. The diameter of pin **74** may range between approximately one and one-quarter inches to one and one-half inches. Alternatively and optionally, flanges **76** and pin **74**, and/or flanges **76**, pin **74** and plate **68** may be formed as one element.

Preferably each element of the anchor pad **60** is made of high strength steel and constructed to withstand the digging and/or pulling forces of the work tool accessory **34** having a boom feature **36** that is attached to the skid steer loader **10**. The thickness of anchor pad **60** may range between approximately one-half to an inch.

As is apparent to one skilled in the art, a change in one dimensional aspect (length and/or height and/or thickness) of anchor pad **60** generally results in a change in another dimensional aspect of the pad **60** in order to maintain a desired minimum component strength that withstands the reciprocating forces of the equipment involved. For example, if the size of flange **76** is reduced in size to occupy less space, such as from a four-inch square to an approximately three-inch square, then it follows that the thickness of flange **76** would necessarily increase from one-half inch to approximately three-quarter inch to be of sufficient strength to withstand the digging forces of boom feature **36**.

Anchor plate **68** is preferably dimensioned approximately five inches wide, six and one-half inches high, and three-quarter inch thick, and contains a plurality of apertures **78** for fastening onto the main frame of loader **10** via fasteners **72**. Fastener **72** preferably comprises an appropriate length hexagonal bolt and nut. In order to withstand the generally downwardly pulling forces of the boom feature **36** that are translated onto anchor plate **68**, a minimum of two apertures **78** is preferably located at the top of plate **68**. For best results, one aperture is preferably positioned above each flange **76**, which are approximately three inches apart. A third aperture **78** is preferably located below pin **74** and at a location approximately central between each flange **76** and in line with the vicinity of a bottom edge of flange **76**.

The third element in the connector device of the present invention is a hook **70**, sized not only to accommodate the contouring shape of the cylindrical pin **63** in anchor hook assembly **50** but also for strength to accommodate the high and/or reciprocating stresses generally associated with the boom feature **36** of work tool accessory **34**.

In a preferred embodiment depicted in FIG. **6**, hook **70** is in the general form of a in order to accommodate the cylindrical pin **63** in open space **82**. In other words, in an exemplary application where cylindrical pin **63** has a diameter measuring approximately one and three-quarter inches, the inner contour of open space **82** is correspondingly sized to measure approximately one and three-quarter inches in order to accommodate pin **63**. Also, the thickness of hook **70** may range from approximately one-half of an inch to one inch. A horizontal base portion **79** of hook **70** is configured to absorb, accommodate or withstand the pulling power of the work tool accessory **34** having a boom feature **36** without breakout, where its width ranges from approximately five and one-half inches to about six inches in the area proximately below open space **82** extending from the front (near reference number **79**) to rear **84**. The height of hook **70** may range from approximately five to six inches, such as five and one-half inches.

Moving upwardly from rear **84**, behind open space **82** and towards point **83**, is a sloping back region **81**, similarly designed for strength in that back region **81** generally decreases gradually in width from rear **84** upwardly towards point **83**, and at an angle at one or more points along region **81** between approximately ten and 90 degrees. As such, the slope of back region **81** provides substantial strength support against breakout forces for the area of hook **70** below open space **82** as well as the area behind open space **82** (i.e. area between reference numbers **82** and **81**).

Preferably, several factors contributing to a configuration of hook **70** as depicted to overcome a maximum breakout force of boom feature **36** generally include: a relatively wide and thick bottom half, best represented by the area between and below reference numbers **81** and **82**, approximately forming a substantial portion or area of the hook **70**, approximating two-thirds of the area of hook **70**; a back region **81** generally sloping upwardly from rear **84** towards the top of its "c" curvature, as at **83**; a back region **81** sloping at one or more points therealong at a gradual incline between zero and 90 degrees to a top point on its "c" shape (in the vicinity of reference number **70**); a hook width that generally decreases in a direction from the bottom—between rear **84** and the front (near reference number **79**)—upwardly towards a top point of its "c" shape, as at **83**; a rear **84** which slope inclines at a rate greater than the slope of back region **81**; the base portion **79** characterized by a slope that declines at each point approximately at an angle between zero and 90 degrees; and, a substantial portion of base portion **79** extending approximately beyond a beginning of the "c" shape configuration of hook **70** as at point **83**, and below open space **82**.

By way of exemplary installation (FIG. **8**), the bottom of hook **70** is fixedly attached to a top surface area of work tool accessory **34**, preferably in the vicinity of each side of the support base of control panel **40** and in alignment for a secure hooking connection of anchor hook **58** and pin **74** of anchor plate **60**. A preferred embodiment for fixedly attaching hook **70** is through the use of a low hydrogen covered electrode or an iron powder low hydrogen moisture resistant electrode, suited to weld the variety of materials that loader machines **10**

and work tool accessories **34** are made of. Accordingly, use of a direct current electrode positive with a minimum yield strength of approximately 68,000 psi and a tensile strength of approximately 78,000 psi to fixedly attach hook **70** is preferable.

Fixedly attaching hook **70** on each side of the support base of control panel **40** is accomplished in an exemplary embodiment depicted in FIGS. **8**, **12** and **13**B. For ease of discussion, identification is made to the right and left hand sides of control panel **40**, which correlates in FIG. **9** to the pair of corresponding anchor pads **60**, one on the right hand side of the operator compartment **14** and one the other on the left hand side of compartment **14**.

Referring back to FIG. **8**, which illustrates the right hand side anchor pad **60** on the skid steer machine **10** and the right hand side of the support base of control panel **40**, hook **70** is spaced an appropriate distance from control panel **40** to receive cylindrical pin **63** in a way that positions the open space **82** of hook **70** towards the boom feature **36** of the work tool accessory **34**.

As depicted in FIG. **8**, a cut-out **86** shaped in size and contour substantially the same as cylindrical pin **63**, is formed in one side of the support base of control panel **40**. In addition, the non-threaded end of adjusting bolt **52**, which contains bolt head **56** and wedge lock washer assembly **64**, **66**, is positioned between hook **70** and one side of the support base of control panel **40**, in such a way that allows cylindrical pin **63** to be hooked into space **82** and cut-out **86**, and further allows wedge lock washer **64** to lock cylindrical pin **63** and adjusting bolt **52** in place, substantially preventing lateral movement therein. The other end of anchor hook assembly **50** in the form of anchor hook **58** is positioned for a hooked connection onto pin **74** of anchor pad **60**.

A similar arrangement of hook **70** and anchor hook assembly **50** as described above, is installed on the left hand side of the support base of control panel **40** involving the anchor pad **60** on the left hand side of skid steer machine **10**.

With both ends of anchor assembly **50** attached—namely, cylindrical pin **63** fixedly locked into cut-out **86** and open space **82** of hook **70** on one end, and anchor hook **58** securely hooked onto pin **74** of anchor pad **60** on the other end—on both sides of control panel **40**, the work tool accessory **34** having a boom feature **36**, on one end, is securely attached to the skid steer loader machine **10** on the other end.

As depicted in the preferred embodiment of FIG. **9**, a pair of anchor pads **60** receives the hooked connection of a pair of anchor hook assemblies **50** (FIG. **4**) on both sides of the control panel **40** (not shown). Each anchor pad **60** is preferably positioned on the body, not the lift arm, of the skid steer machine **10** and spaced apart in order to accommodate the width of the control panel **40**.

In addition, each anchor pad **60** is preferably positioned below the operator's compartment **14** and above the coupler **24** in such a way that eliminates vertical movement of the lift arm. In other words, the left hand side anchor pad **60** is preferably positioned on the left hand side of and below operator compartment **14** at an appropriate height in order for the hooked connection of anchor hook **58** onto pin **74** to be in horizontal alignment with cylindrical pin **63** positioned into hook **70** (FIG. **8**) and cutout **86** on the left hand side of control panel **40**, and the right hand side anchor pad **60** is preferably positioned on the right hand side of and below compartment **14** at an appropriate height that facilitates horizontal alignment of anchor hook **58** onto pin **74**, on one end of anchor hook assembly **50**, with cylindrical pin **63** into another hook **70** and cutout **86**, on the other end of anchor hook assembly **50**, on the right hand side of control panel **40**, as described above. Horizontal alignment of both ends of anchor hook assembly **50** connecting the skid steer loader **10** to the work tool accessory **34** substantially eliminates vertical lift arm movement.

Once work tool accessory **34** is coupled to skid steer loader **10** via coupler **24** and apertures **32** (FIG. **12**), hydraulic tilt cylinder **21** is actuated to retract the work tool accessory **34** in a direction towards operator compartment **14**, to facilitate coupling both ends of the anchor hook assembly **50** per FIG. **8** and as described above. Preferably, securing an appropriate hooked connection of anchor hook **58** onto pin **74** is achieved by turning bolt head **56**, which in turn causes the threaded portion of adjusting bolt **52** to mate inwardly or outwardly into/out of hex nut **62** for appropriate adjustment and attachment.

Now, to achieve a stable and safe secure attachment of the work tool accessory **34** to the skid steer loader **10** without undesirable or unwanted machine instability, such as uncontrollable movement or dancing of the boom feature **36**, a final component in the connector device of the present invention is at hand; namely, stop pad **80**.

Referring now to FIG. **7**, stop pad **80** is preferably a solid block of high strength steel useful to absorb and/or resist vibrational stresses caused by the tilt cylinder **21** and the breakout force of work tool accessory **34** having a boom feature **36**.

By way of installation, referring now to FIG. **10**, stop pad **80** is fixedly attached near a distal end on each lift arm **18** of the skid steer loader **10**. A preferred embodiment for fixedly securing stop pad **80** is by angular attachment to lift arm **18** in such a way that it serves as a backstop to coupler **24** by ensuring that a rear surface **88** of coupler **24** is substantially prevented from any further retracting movement in a direction toward lift arm **18**. In this attachment arrangement, stop pad **80** substantially serves as a dead stop, or additional support stop, for coupler **24**. Moreover, since the location of stop pad **80** on lift arm **18** is angularly positioned in the vicinity of lift hook **85**, when lift arm **18** is in a down position in front of machine **10** as depicted in FIG. **10**, one corner **90** of stop pad **80** may be removed or cut-off as desired, to avoid conflict with or better accommodate the loader machine's lift hook **85**.

The dimension of stop pad **80** is sized to substantially: overcome undesirable equipment shaking; eliminate unwanted lateral movement; reduce equipment wear and tear; accommodate high reciprocating and/or vibrational stresses and/or loads; and the like. Stop pad **80** is preferably approximately one inch in thickness to accommodate any possible sideways movement of the rear surface **88** of coupler **24** that may occur during operation. Since a relatively small amount of lateral movement between the rear surface **88** of coupler **24** and lift arm **18** results in frequent and expensive re-bushing of the lift arm **18**, stop pad **80** not only reduces unnecessary wear on the lift arm's pivot point bushings but translates into longer bushing life.

In addition, stop pad **80** is preferably approximately at least two inches wide and at least five and one-half inches long, which dimensions successfully prevents shaking of each lift arm **18** because stop pad **80** not only substantially withstands the pressure of tilt cylinder **21** but also the high breakout force and digging force of work tool accessory **34** having a boom feature **36**. The length of stop pad **80** preferably covers a substantial length of the rear surface **88** of coupler **24** that it backstops.

As discussed above, a change in one dimensional aspect (length and/or height and/or thickness) of stop pad **80** generally results in a change in another dimensional aspect in order

to maintain a desired minimum component strength, for instance, that withstands the reciprocating forces of the equipment involved.

Referring now to FIG. **11**, there is shown an exemplary illustration of two hooks **70** on the left hand side of control panel **40**. As depicted, hooks **70** are preferably spaced apart to receive cylindrical pin **63** in open space **82** (not identified). Hooks **70** are preferably fixedly attached to a top surface of work tool accessory **34** as described above. The characteristics of each hook **70** are as described above.

FIG. **12** illustrates an exemplary installation of a pair of hooks **70** coupling one end of the anchor hook assembly **50** on the left hand side of control panel **40** of work tool accessory **34**, according to a preferred embodiment of the invention. Use/operation of hook **70** is as earlier described with respect to FIG. **8**. However, a pair of hooks **70** is preferably employed that is not only spaced an appropriate distance from the support base of control panel **40** to properly receive cylindrical pin **63**, but is also spaced for appropriate alignment of hook **58** onto pin **74**.

In addition, as earlier described, the pair of hooks **70** are positioned in such a way that each open space **82** of hook **70** is in a direction facing the boom feature **36** of the work tool accessory **34**. In this regard, the non-threaded end of adjusting bolt **52**, which contains bolt head **56** and wedge lock washer assembly **64**, **66** (**66** not shown), is positioned between both hooks in such a way that facilitates cylindrical pin **63** being hooked into space **82** and further facilitates wedge lock washer locking cylindrical pin **63** and adjusting bolt **52** in place, substantially preventing lateral movement therein. Anchor hook (FIG. **12**) is positionable for hooked connection onto pin **74** (FIG. **8**) of anchor pad **60** on the left hand side of compartment **14**.

A preferred embodiment for fixedly attaching each hook **70** to a top surface of work tool accessory **34** is through the use of an electrode, having a minimum yield strength of approximately 68,000 psi and a tensile strength of approximately 78,000 psi, that is suited to attach the materials that loader machines **10** and work tool accessories **34** are made of.

Referring now to FIG. **13**A, there is shown an exemplary pair of hooks **70** in accordance with a preferred embodiment of the connector device of the present invention. The pair of hooks **70** comprises a first part **92**, which includes hooks **70** and hook plate **94** for one side of control panel **40**, and a second part **98**, which includes hooks **70** and hook plate **100** for the other side of control panel **40**. In keeping with the two sided identification of control panel **40** in terms of FIG. **9**'s anchor pads **60**, the first part **92** may be described as the pair of hooks configured for the left hand side of control panel **40**, and the second part may be described as the pair of hooks configured for the right hand side of control panel **40**.

Preferably, in first part **92**, a pair of hooks **70** is positioned on hook plate **94** in spaced relation to each other, as earlier described, except that one of the hooks **70** is fixedly secured nearest the left edge of hook plate **94**, such as between the range of approximately one-half to one inch from the left edge (near reference number **96**) of hook plate **94**. To the immediate right of this left-edge or left-justified hook **70**, spaced alongside its width, are one or more apertures **78** for securing hook plate **94** to the work tool accessory **34**. As the second hook **70** is already in spaced relation to the left-edge hook, in order to accommodate cylindrical pin **63** as earlier described, another set of one or more apertures **78** is preferably located immediately to the right thereof.

As with the cylindrical pin **63** depicted in FIG. **12**, for example, in FIG. **13**A the axial areas of cylindrical pin **63** in the vicinity of the diameter of adjusting bolt **52**, are also preferably supported on both sides each by hooks **70** in first part **92**. As earlier discussed, the support distance of cylindrical pin **63** between the two hooks **70** on hook plate **94** is preferably the size of the wedge lock washer **64** positioned therebetween, which is approximately two inches.

Preferably two apertures **78**, which support each hook **70**, are spaced along the width of the hook **70** it supports. Since, in one application, for example, one hook **70** is left justified approximately one-half inch or less from the left edge of hook plate **94**, this means that two apertures **78** to the immediate right of this hook are spaced along the width of this hook **70**. Approximately two inches from the left-justified hook **70** is the second hook **70** with another two apertures **78** spaced along its width, also preferably one-half inch or less, to its right.

In addition, hook plate **94** approximates the shape of the bottom surfaces **96** of each hook **70**. As described above, the shape of the bottom surfaces **96** of hook **70** and thereby the shape of hook plate **94**, preferably approximates the shape of the top surface of the work tool accessory **34**. Preferably, hooks **70** in first part **92** as well as in second part **98** are fixedly attached through the use of appropriate materials suited for attachment to loader machines **10** and work tool accessories **34**, or the first and second parts **92**, **98** may be integrally formed or of unitary construction with hook plate **94**, **100**, respectively.

Hooks **70** are as earlier described herein without further repetition, therefore hook plate **94**, **100** is sized to accommodate the above described arrangement of hooks **70** in first and second parts **92**, **98**, respectively. Preferably, fasteners **72** attach hook plate **94**, **100** to the work tool accessory **34**.

Still referring to FIG. **13**A, second part **98** includes a pair of hooks **70** and apertures **78** on a hook plate **100** as similarly described above with reference to first part **92**, except that in second part **98** one of the hooks **70** is positioned nearest the right edge of hook plate **100**, such as approximately one-half inch or less from the right edge of hook plate **100**.

Preferably two apertures **78** (some not viewable), which support each hook **70** in second part **98**, are spaced along the horizontal width to the left of the hook **70** it supports. Similarly, since approximately two inches separate the right-justified hook **70** from the other hook **70**, hook plate **100** is also sized to accommodate the above described arrangement of the pair of hooks **70** for second part **98**, and fasteners **72** are usable to attach hook plate **100** to the work tool accessory **34**.

The left- and right-justified hook configuration of first and second parts **92**, **98**, respectively, operates complementarily with the control panel **40** of the work tool accessory **34** having a boom feature **36** in that placement of the left-justified hook configuration of first part **92** complements the left hand side of control panel **40**, and placement of the right-justified hook configuration of second part **98** complements the right hand side of control panel **40**.

Accordingly, the left-justified and right-justified hook configuration of first and second part **92**, **98**, respectively, of the pair of hooks **70** not only eliminates user dangers, error and confusion, but it also provides for safe and convenient quick attachment and removal, if necessary, all of which translates into valued savings of time, health and cost.

Referring now to FIG. **13**B, there is shown an exemplary installation of first part **92**. A similar installation arrangement is configured on the other side of control panel **40** involving the other anchor pad **60** on that side of the skid steer machine **10**.

Once work tool accessory **34** is coupled to skid steer loader **10** via coupler **24** (FIG. **9**) and apertures **32** (FIG. **13**B), for example, where a rear surface **88** of coupler **24** is retracted to

its fullest position against stop pad **80** (FIG. **10**), and locked adjustment of anchor hook **58** (FIG. **13**B) onto the pin **74** in anchor pad **60** has occurred, conditions are ideal for alignment and attachment of the first part **92** (hooks **70** and hook plate **94**) and second part **98** (hooks **70** and hook plate **100**) onto the work tool accessory **34**.

Preferably, alignment and locked connection of the cylindrical pin **63** of anchor hook assembly **50** into hooks **70** of first part **92**, in alignment with hooked connection of anchor hook **58** onto pin **74** is as previously described. Similarly, this procedure is repeated for alignment and locked connection of cylindrical pin **63** into hooks **70** of second part **98**, in alignment with hooked connection of anchor hook **58** onto pin **74**, also as previously described. Upon completion, hook plate **94**, **100** is fixedly attached to work tool accessory **34** via fasteners **72**, and safe, stable operation of the boom feature **36** can be had.

The present invention has been described with reference to preferred embodiment(s) and exemplary application(s), which are intended to illustrate the principles of the invention without limiting the scope of the invention. Other embodiments in addition to the preferred embodiments disclosed herein may be made from consideration of the specification and practice of the disclosed apparatus, without departing from the scope of the following claims and equivalents. All suitable modifications and equivalents of carrying out the invention are contemplated as being within the scope of the following claims particularly pointing out and distinctly claiming the subject matter regarded as the invention.

What I claim is:

1. A connector device coupling a skid steer loader to a work tool accessory, said connector device comprising:

(a) a pair of anchor hook assemblies each comprising an adjusting bolt, an anchor hook, a hex nut one end of which matingly connects said anchor hook, a pin positioned between said hex nut and a bolt head of said adjusting bolt, and a washer assembly positioned between said pin and said bolt head;

(b) a pair of anchor pads, for coupling to a skid steer loader, each comprising an anchor plate, a pair of flanges spatially position on said anchor plate, and a pin attaching said pair of flanges therebetween, each anchor pad receives each said anchor hook; and

(c) a pair of hooks, for coupling to a work tool accessory, comprising a first part and a second part, said first part including two hooks spatially positioned on a first hook plate, said second part including two hooks spatially positioned on a second hook plate, each said two hooks receives therebetween the pin of each anchor hook assembly.

2. The connector device according to claim **1**, one hook in said first part positioned nearest a left edge of said first hook plate.

3. The connector device according to claim **1**, one hook in said second part positioned nearest a right side edge of said second hook plate.

4. The connector device according to claim **1**, each hook supporting an axial area of said pin surrounding a diameter of said adjusting bolt.

5. The connector device according to claim **1**, each hook decreasing in dimension from a bottom upwardly, a back region sloping at a gradual incline upwardly from a rear of the hook, and a rear which slope inclines at a rate greater than the slope of said back region.

6. The connector device according to claim **1**, an area of the hook behind and below an open space in the hook approximating two-thirds of the area of the hook.

7. The connector device according to claim **1**, each hook having a front base portion extending beyond a top point of the hook.

8. The connector device according to claim **1**, said washer assembly locking said anchor hook assembly pin against lateral movement.

9. The connector device according to claim **1**, said stop pad backstopping a rear surface of a coupler of said skid steer loader.

10. The connector device according to claim **1**, said anchor hook is curved in the shape of a "c".

11. The connector device according to claim **1**, said anchor hook assembly pin is a cylindrical pin.

12. The connector device according to claim **1**, comprising a stop pad angularly attached in a vicinity of a distal end on a lift arm of said skid steer loader.

13. A method of using a connector device coupling a skid steer loader to a work tool accessory, said method comprising the steps of:

(a) installing a pair of hooks on a work tool accessory, each pair comprising a first part and a second part, by securing a first part including two hooks spatially positioned on a first hook plate, on one side of a control panel, and securing a second part including two hooks spatially positioned on a second hook plate, on another side of a control panel;

(b) installing a pair of anchor pads on said loader, each pair comprising an anchor plate, a pair of flanges spatially position on said anchor plate, and a pin attaching said pair of flanges therebetween;

(c) coupling the work tool accessory to said skid steer loader with a pair of anchor hook assemblies such that each anchor hook of each anchor hook assembly receives each anchor pad attached on said loader, and each pin of each anchor hook assembly is received into said first part and said second part, respectively, each pair comprising an adjusting bolt, an anchor hook, a hex nut one end of which matingly connects said anchor hook, and a pin positioned between said hex nut and a bolt head of said adjusting bolt;

(d) installing a stop pad on said loader, backstopping a rear surface of a coupler of said skid steer loader against further movement.

* * * * *