UNITED STATES PATENT AND TRADEMARK OFFICE

BEFORE THE PATENT TRIAL AND APPEAL BOARD

KUBOTA NORTH AMERICA CORPORATION,
Petitioner,

v.

VERMEER MANUFACTURING COMPANY,
Patent Owner.

IPR2025-00171
U.S. Patent No. 10,202,266

Filed: August 20, 2026

PATENT OWNER'S NOTICE OF CROSS-APPEAL TO THE UNITED STATES COURT OF APPEALS FOR THE FEDERAL CIRCUIT

via P-TACTS
Patent Trial and Appeal Board

via Email
Director of the United States Patent and Trademark Office
efileSO@uspto.gov

via CM/ECF
United States Court of Appeals for the Federal Circuit

Pursuant to 28 U.S.C. § 1295(a)(4)(A), 35 U.S.C. §§ 141(c), 142, and 319, and 37 C.F.R. §§ 90.2(a), 90.3, 5 U.S.C. §§ 701–706, and Federal Circuit Rule 15(a)(1), Patent Owner Vermeer Manufacturing Company ("Patent Owner") provides notice that it cross-appeals to the United States Court of Appeals for the Federal Circuit from the Final Written Decision of the Patent Trial and Appeal Board ("Board") entered June 8, 2026 (Paper 61) (public version at Paper 62), and from all underlying and related orders, decisions, rulings, and opinions regarding U.S. Patent No. 10,202,266 B2 ("the 266 Patent") in *inter partes* review proceeding IPR2025-00171. This Notice is timely filed within fourteen (14) days of the filing of Petitioner Kubota North America Corporation's Notice of Appeal on August 10, 2026 (Paper No. 63), which has been assigned Federal Circuit Docket No. 2026-2146. 37 C.F.R. § 90.3(a)(1); Fed. R. App. Proc. 4(a)(3); Federal Circuit Rule 15(a)(1).

In accordance with 37 C.F.R. § 90.2(a)(3)(ii), the expected issues on cross-appeal include, but are not limited to: the Board's error(s) in determining that Petitioner demonstrated that challenged claims 1–13 and 28 of the '266 Patent are unpatentable, and any finding or determination supporting or related to those determinations—including, but not limited to the Board's claim construction, factual findings regarding the prior art and motivation to combine the teachings of the prior art, and denial of Patent Owner's motion to exclude the foreign-language references for failure to comply with 37 C.F.R. § 42.63(b) and Federal Rules of Evidence 602

and 604—as well as all other issues decided adversely to Patent Owner in any orders, decisions, rulings, or opinions in *inter partes* review proceeding IPR2025-00171.

Pursuant to 35 U.S.C. § 142 and 37 C.F.R. § 90.2(a), this Notice is being filed with the Director of the United States Patent and Trademark Office and with the Patent Trial and Appeal Board. In addition, a copy of this Notice and the required docketing fees are being filed with the Clerk's Office for the United States Court of Appeals for the Federal Circuit via CM/ECF.

Date: August 20, 2026

Respectfully submitted,

/Richard L. Brophy/

Richard L. Brophy
Reg. No. 69,736
Armstrong Teasdale LLP
7700 Forsyth Boulevard
Suite 1800
Saint Louis, Missouri 63105
Telephone: 314.621.5070
Facsimile: 314.621.5065
rbrophy@atllp.com

Lead Counsel for Patent Owner

CERTIFICATE OF SERVICE

Under 37 C.F.R. § 42.6(e), the undersigned certifies that on August 20, 2026, a copy of the foregoing was served via electronic mail on the following attorneys of record:

David M. O'Dell
HAYNES AND BOONE, LLP
2801 N. Harwood Street, Suite 2300
Dallas, TX 75201
Phone: (972) 739-8635
Fax: (214) 200-0853
david.odell.ipr@haynesboone.com
USPTO Reg. No. 42,044

Greg Michelson
HAYNES AND BOONE, LLP
2801 N. Harwood Street, Suite 2300
Dallas, TX 75201
Phone: (949) 202-3022
Fax: (214) 200-0853
greg.michelson.ipr@haynesboone.com
USPTO Reg. No. 44,940

Kelly Gehrke Lyle
HAYNES AND BOONE, LLP
2801 N. Harwood Street, Suite 2300
Dallas, TX 75201
Phone: (512) 867-8528
Fax: (214) 200-0853
kelly.lyle.ipr@haynesboone.com
USPTO Reg. No. 62,332

John Russell Emerson
HAYNES AND BOONE, LLP
2801 N. Harwood Street, Suite 2300
Dallas, TX 75201
Phone: (214) 651-5328
Fax: (214) 200-0853
Russ.Emerson.IPR@haynesboone.com
USPTO Reg. No. 44,098

Hong Shi
HAYNES AND BOONE, LLP
2801 N. Harwood Street, Suite 2300
Dallas, TX 75201
Phone: (512) 867-8440
Fax: (214) 200-0853
hong.shi.ipr@haynesboone.com
USPTO Reg. No. 69,009

By: *___/Richard L. Brophy/___*
Lead Counsel for Patent Owner
Richard L. Brophy
Reg. No. 69,736

Trials@uspto.gov
571-272-7822

Paper 61
Date: June 8, 2026

UNITED STATES PATENT AND TRADEMARK OFFICE

BEFORE THE PATENT TRIAL AND APPEAL BOARD

KUBOTA NORTH AMERICA CORPORATION,
Petitioner,

v.

VERMEER MANUFACTURING COMPANY,
Patent Owner.

IPR2025-00171
Patent 10,202,266 B2

Before MEREDITH C. PETRAVICK, ANNETTE R. REIMERS, and ERIC C. JESCHKE, *Administrative Patent Judges*.

JESCHKE, *Administrative Patent Judge*.

JUDGMENT
Final Written Decision
Determining Some Challenged Claims Unpatentable
Granting in Part Petitioner's Motion to Exclude
Denying Patent Owner's Motion to Exclude
35 U.S.C. § 318(a)

I. BACKGROUND

Petitioner, Kubota North America Corporation, challenges claims 1–16 and 19–28 of U.S. Patent No. 10,202,266 B2 (Ex. 1001, "the challenged patent"), which is assigned to Patent Owner, Vermeer Manufacturing Company. We have jurisdiction under 35 U.S.C. § 6, and we issue this Final Written Decision under 35 U.S.C. § 318(a) and 37 C.F.R. § 42.73.

For the reasons below, we conclude that Petitioner has proven, by a preponderance of the evidence, the unpatentability of claims 1–13 and 28 but has not proven, by a preponderance of the evidence, the unpatentability of claims 14–16 and 19–27. We grant in part Petitioner's Motion to Exclude and we deny Patent Owner's Motion to Exclude.

A. Procedural History

Petitioner filed a Petition seeking *inter partes* review of the challenged claims. Paper 2 ("Pet."). Patent Owner filed a Preliminary Response. Paper 5 ("Prelim. Resp."). With authorization (Ex. 3001), Petitioner filed a Preliminary Reply addressing discretionary denial. Paper 8. Upon review of the arguments and supporting evidence, we instituted an *inter partes* review of all claims and grounds asserted in the Petition. Paper 15 ("Decision on Institution" or "Dec. Inst.").

After institution, Patent Owner filed a Patent Owner Response (Paper 22, "PO Resp.")[1], Petitioner filed a Reply in support of the Petition (Paper 32, "Pet. Reply"), and Patent Owner filed a Sur-reply to Petitioner's Reply (Paper 36, "PO Sur-reply").

[1] Paper 21 is a public version of the Patent Owner's Response.

Petitioner relies on the declaration testimony of Dr. Steven Alan Velinsky, Ph.D., P.E. filed with the Petition (Ex. 1003, "Velinsky Pet. Decl.") and on the Second Declaration of Dr. Velinsky, filed with the Reply (Ex. 1042, "Velinsky Reply Decl."). Patent Owner relies on the declaration testimony of Dr. Mark Fleming, Ph.D., P.E., filed with the Patent Owner's Response. Ex. 2016 ("Fleming Decl.").[2]

An oral argument in this proceeding was held on March 19, 2026, and a copy of the transcript was entered into the record. Paper 59 ("Tr.").[3]

B. Related Proceedings

The parties identify one proceeding in the U.S. District Court for the Northern District of Texas (the "Texas District Court") involving the challenged patent: *Vermeer Manufacturing Co. v. Kubota North America Corp.*, No. 4:24-cv-00799-P (N.D. Tex.), filed August 20, 2024 (the "Texas Litigation"). Pet. 107; Paper 3 (Patent Owner Mandatory Notices) at 2. The Texas District Court stayed the Texas Litigation on March 19, 2025, pending resolution of proceedings before the Board. *See* Ex. 1037 (Order granting Motion to Stay); Paper 7 (Petitioner's Updated Mandatory Notices) at 2.

Petitioner identifies one terminated proceeding in the U.S. District Court for the Southern District of Iowa (the "Iowa District Court") involving the challenged patent: *Vermeer Manufacturing Co. v. The Toro Co.*, No. 4-

[2] Exhibit 2016 is also a public version of Dr. Fleming's Declaration.

[3] Paper 60 is a public version of the transcript.

17-cv-00076 (S.D. Iowa) (filed Feb. 28, 2017; terminated May 17, 2021) (the "Iowa Litigation").[4] Pet. 107; Paper 7 at 2.

The parties identify other proceedings at the Board involving patents allegedly related to the challenged patent. This table identifies the related patents and their respective case numbers:

Case No.	U.S. Patent No.
IPR2025-00167	9,321,386 B1
IPR2025-00168	9,321,386 B1
IPR2025-00169	9,321,386 B1
IPR2025-00170	9,975,750 B2
IPR2025-00381	11,465,891 B2
PGR2025-00016	12,098,063 B2

Pet. 108; Paper 3 at 2; Paper 7 at 2–3; Paper 14 (Patent Owner's Updated Mandatory Notices) at 2.

C. The Challenged Patent

The challenged patent "relates to compact tool carriers having a loader mounted to a low-profile mainframe." Ex. 1001, 1:16–17. According to the challenged patent, "[c]ompact tool carriers are tool-mounted machines that are capable of working in tight spaces for utility or do-it-yourself home projects." *Id.* at 1:21–23.

[4] Although some filings in the Iowa Litigation include "Vermeer Corporation" in the caption, "Vermeer Manufacturing Company" (i.e., Patent Owner here) was formally substituted into the caption and pleadings in the Iowa Litigation. *See* ECF No. 129 (Dec. 21, 2018) (Text Order).

Figure 1 is reproduced below:

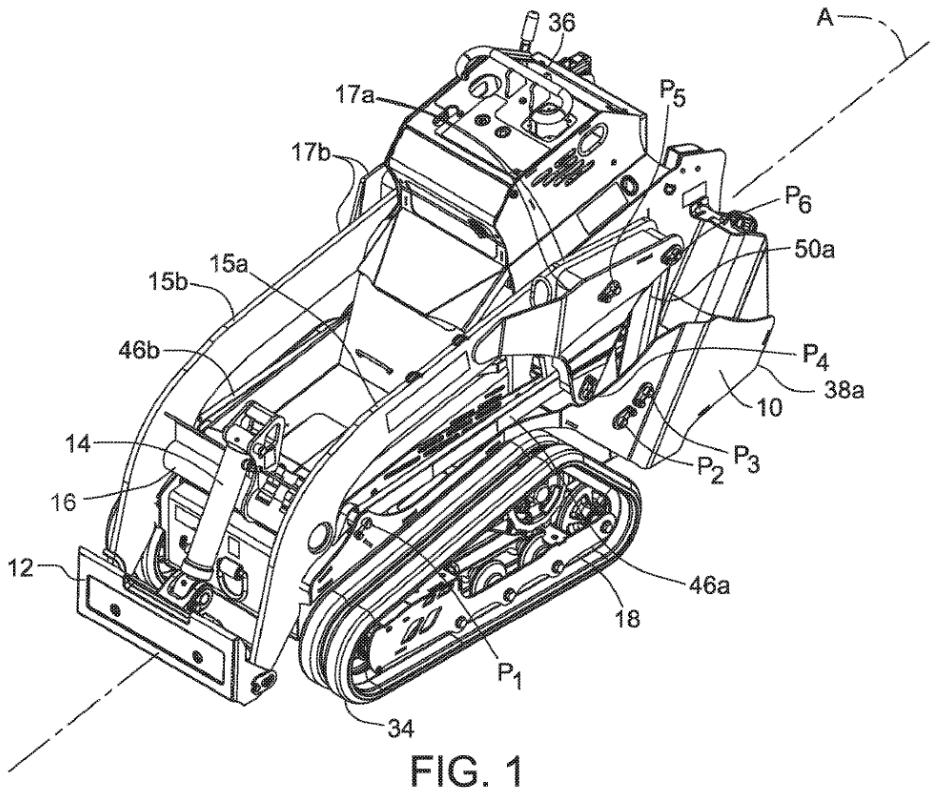

FIG. 1

Figure 1 is a perspective view of a compact tool carrier with the loader in the down position. Ex. 1001, 2:28–29. Figures 2 and 3 are below:

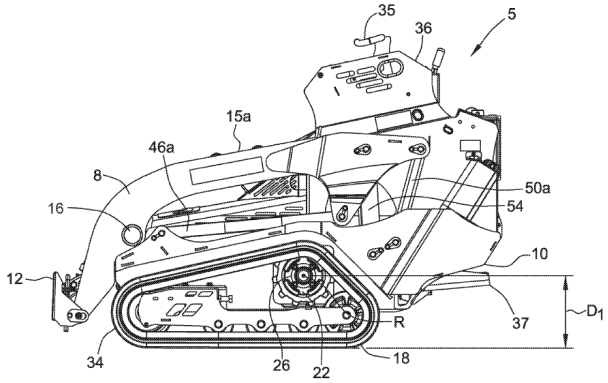

FIG. 2

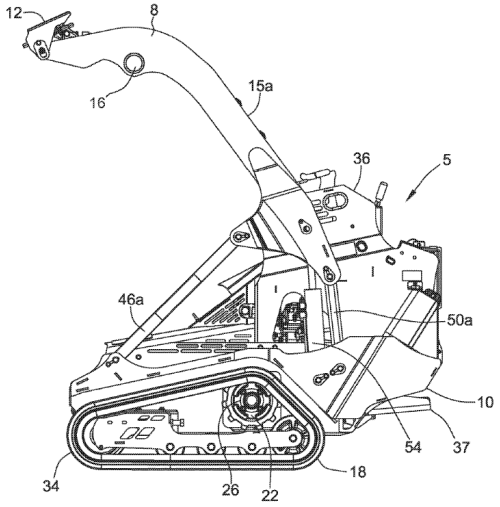

FIG. 3

Figure 2 is a side view of a compact tool carrier with the loader in the lowered position, and Figure 3 is a side view of a compact tool carrier with the loader in the raised position. Ex. 1001, 2:30–33. The compact tool carrier 5 shown above includes "a loader 8 supported by a mainframe 10" and "an attachment plate 12 for interchangeably attaching any one of a number of tools (not shown)." *Id.* at 2:47–50.[5] In addition, compact tool carrier 5 includes (1) loader arms 15a and 15b, (2) a drive mechanism 18 attached to mainframe 10, (3) a control station 36 with controls for moving compact tool carrier 5 and raising and lowering loader 8, (4) an operator platform 37 for standing operation, and (5) linkages 46a, 46b, 50a, and 50b attached to mainframe 10. *Id.* at 2:54–56, 3:21–22, 3:32–35, 3:46–47, 4:34–40, 4:55–58. Actuator 54 "is powered to raise the loader 8 and, in some embodiments, is also powered to lower the loader 8 (as opposed to a one-way actuator lowered by gravity alone)." *Id.* at 4:51–54.

[5] In this Decision, we omit emphasis on reference numerals in quotations from the challenged patent and prior art references.

Figure 4 is reproduced below:

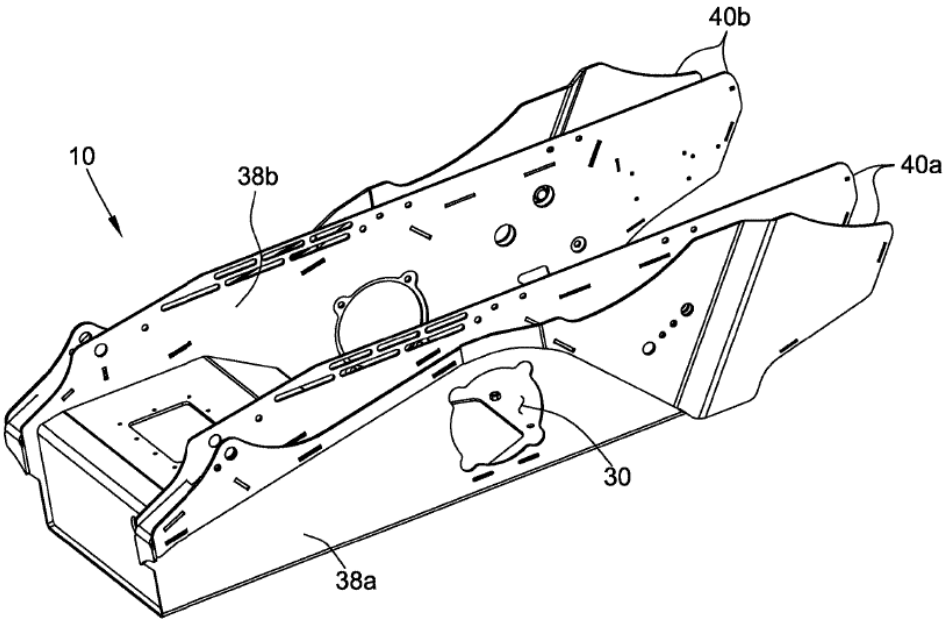

FIG. 4

Figure 4 is a perspective view of a mainframe of a compact tool carrier. Ex. 1001, 2:34–35. The challenged patent states: "As used herein, the term 'mainframe' generally refers to a single weldment to which the loader 8 is attached, optionally through one or more pivotal linkages." *Id.* at 4:13–16.

D. The Challenged Claims

Petitioner challenges claims 1–16 and 19–28, of which claims 1, 7, 14, 19, and 25 are independent.[6] Claims 2–6 depend from claim 1; claims 8–13 depend from claim 7; claims 15 and 16 depend from claim 14; claims

[6] The challenged patent is amended by an *ex parte* reexamination certificate. Ex. 1001 at 15–17 ("Reexam Cert."). Independent claims 7, 14, 19, and 25 are recited in the Certificate. *See* Reexam Cert. Claims 17 and 18 were cancelled in reexamination. *See* Ex. 1001 at 16.

20–24 depend from claim 19; and 26–28 depend from claim 15.

Independent claim 1 is reproduced below, reformatted from the version provided in the challenged patent and with bracketed designations added to identify each clause:

> 1. [**1.0**] A loader apparatus configured for standing operator control and comprising:
>
> [**1.1**] a loader adapted to carry a tool, the loader being moveable between a down position and a vertically raised position;
>
> [**1.2**] a loader support for supporting the loader, the loader support having a first side and a second side, the loader being free from direct attachment to the loader support;
>
> [**1.3**] a first linkage pivotally attached to the first side of the loader support at a first linkage pivot point;
>
> [**1.4**] a second linkage pivotally attached to the first side of the loader support at a second linkage pivot point;
>
> [**1.5**] an actuator pivotally attached to the first side of the loader support at an actuator pivot point;
>
> [**1.6**] a control station having operator controls for propelling the loader apparatus forward and for raising and lowering the loader; and
>
> [**1.7**] an operator platform for standing operation of the operator controls of the control station, the operator platform being located toward a rear of the loader apparatus such that the first linkage pivot point, second linkage pivot point, and the actuator pivot point are disposed forward of the operator platform, the first linkage pivot point, second linkage pivot point, and the actuator pivot point being disposed below the operator controls of the control station.

Ex. 1001, 6:47–7:5.[7]

E. Instituted Grounds of Unpatentability

We instituted *inter partes* review of the challenged claims based on the following grounds of unpatentability asserted by Petitioner:

Claim(s) Challenged	35 U.S.C. §[8]	Reference(s)/Basis
1–7, 10–13, 28	102(a)(1)	KR996[9]
1–7, 10–13, 28	103	KR996
8, 9	103	KR996, Bares[10]
14–16, 19–27	103	KR996, Bares, Beltrami[11]

[7] We adopt and apply below Petitioner's designations for the elements of the challenged claims. *See, e.g.*, Pet. 24–37 (showing designations for the language in claim 1).

[8] The Leahy-Smith America Invents Act ("AIA") included revisions to 35 U.S.C. §§ 102, 103 that became effective on March 16, 2013. Pub. L. No. 112-29, §§ 3(b)–3(c), 3(n)(1), 125 Stat. 284, 285–87, 293 (2011). Because there is no dispute that the challenged claims have effective filing dates after March 16, 2013, we apply the AIA versions of the statutes. We would reach the same outcome, however, under the pre-AIA versions.

[9] Korean Intellectual Property Office Patent KR 10-1041996, published June 16, 2011 (Ex. 1005 (Korean version and certified translation), "KR996").

[10] United States Patent US 6,832,659 B1, issued December 21, 2004 (Ex. 1010, "Bares").

[11] United States Patent US 3,586,195, issued June 22, 1971 (Ex. 1008, "Beltrami").

II. DISCUSSION

A. The Level of Ordinary Skill in the Art

The level of ordinary skill in the art is "a prism or lens" through which we view the prior art and the claimed invention. *Okajima v. Bourdeau*, 261 F.3d 1350, 1355 (Fed. Cir. 2001). The person of ordinary skill in the art is a hypothetical person presumed to have known the relevant prior art. *In re GPAC Inc.*, 57 F.3d 1573, 1579 (Fed. Cir. 1995). In determining the level of ordinary skill in the art, we may consider certain factors, including the "type of problems encountered in the art; prior art solutions to those problems; rapidity with which innovations are made; sophistication of the technology; and educational level of active workers in the field." *Id.* (internal quotation marks and citation omitted).

Petitioner contends, citing declaration testimony, that a person having ordinary skill in the art at the time of the alleged invention "would have had at least a Bachelor of Science degree in Mechanical or Agricultural Engineering and two years of experience in the design of vehicles, or have had equivalent knowledge and experience." Pet. 18. Petitioner adds that "[l]ack of professional experience can be remedied by additional education, and vice versa." *Id.* (citing Velinsky Pet. Decl. ¶¶ 17–20, 52).

Patent Owner responds that it "does not dispute" the definition of one of ordinary skill in the art proposed by Petitioner and "notes that it substantially tracks" Patent Owner's definition. PO Resp. 25; *see also id.* n.6 (defining one of ordinary skill in the art as having "at least a Bachelor of Science degree in Mechanical or Agricultural Engineering and two years of experience in the design of machines, or have had equivalent knowledge and experience").

As noted in the Decision on Institution, Petitioner's proposed definition appears consistent with the record, including the prior art. *See* Dec. Inst. 9–10 (citing *In re GPAC Inc.*, 57 F.3d at 1579). Patent Owner's proposal is the same, except Patent Owner uses the term "machines" instead of "vehicles." With that, we agree with Patent Owner that the differences in the two proposed levels of ordinary skill in the art are minor. Further, Patent Owner has not argued at trial that Petitioner's proposal for the level of ordinary skill leads to an improper understanding of how a skilled artisan would have understood either the challenged patent or the prior art. In the analysis below, we continue to apply the level of ordinary skill in the art adopted in the Decision on Institution, as proposed by Petitioner. The analysis would be the same under Patent Owner's proposed level.

B. Patent Owner's Arguments Regarding Dr. Velinsky's Testimony

We turn now to Patent Owner's arguments presenting several different reasons that Dr. Velinsky's testimony should be given little to no weight. *See* PO Resp. 30–36; PO Sur-reply 7–12. We address each in turn.

First, Patent Owner contends that Dr. Velinsky's "testimony should be disregarded" because he "lacks necessary experience." PO Resp. 30–31. According to Patent Owner, Dr. Velinsky "has no experience designing machines like the compact tool carriers at issue in this proceeding," "lacks any familiarity with how the components of these machines are typically configured or packaged within a machine," and "knows nothing about the kinds of attachments these machines accept." *Id.* at 31 (citing Ex. 2021 (Velinsky Depo. Tr.), 18:4–28:7); *see also* PO Sur-reply 9 (arguing that "none of [Dr.] Velinsky's prior work relates to compact utility loaders"). Patent Owner also contends that Dr. Velinsky

> did nothing to investigate the performance characteristics that drive demand for these machines, has never operated a compact tool carrier, did not operate or even inspect any of the physical machines sold by the parties to this dispute, and did not ask to speak with a single engineer at Kubota about the challenges they face when designing these machines.

PO Resp. 31–32 (citing Ex. 2021, 12:6–13:1, 33:19–34:5, 35:8–36:1). Patent Owner adds that Dr. Velinsky allegedly "has no experience or capabilities with CAD or finite element analysis software—basic tools that would be known to [one of ordinary skill in the art] and used for designing machines in the industry during the critical timeframe at issue in this proceeding." *Id.* at 32 (citing Ex. 2021, 13:2–14:11). At the oral hearing, counsel clarified that, with this argument, Patent Owner takes the position that Dr. Velinsky does not meet the level of ordinary skill in the art. *See* Tr. 36:23–38:24.

We are not persuaded by this argument because none of the knowledge that Patent Owner highlights as lacking in Dr. Velinsky is listed in the nearly identical proposals for the level of ordinary skill in the art. *See* § II.A. Patent Owner does not dispute that Dr. Velinsky has the required Bachelor of Science degree in Mechanical or Agricultural Engineering and two years of experience in the design of *vehicles*, as required. *See* Velinsky Pet. Decl. ¶¶ 7–16 (discussing qualifications and experience), *discussed at* Pet. Reply 5–6. After agreeing with Petitioner's level of ordinary skill in the art (PO Resp. 25), Patent Owner now seeks to exclude *all* of Dr. Velinsky's declaration testimony based on *additional* proposed requirements. *See* PO Resp. 30–32. We decline to do so. *See Sierra Wireless, ULC v. Sisvel S.p.A.*, 130 F.4th 1019, 1024 (Fed. Cir. 2025) ("To offer expert testimony

from the perspective of a skilled artisan in a patent case—like for claim construction, validity, or infringement—a witness must at least have ordinary skill in the art." (quoting *Kyocera Senco Indus. Tools Inc. v. Int'l Trade Comm'n*, 22 F.4th 1369, 1376–77 (Fed. Cir. 2022)) (applying the requirement from *Kyocera* in an appeal from a PTAB decision)).

Second, Patent Owner argues that Dr. Velinsky improperly "relied on [Petitioner's] attorneys to create the CAD drawings that appear in his declaration," that Dr. Velinsky "admitted that he did not determine the locations for the various pivot points that he proffers for his hypothetical modified machine, instead leaving those critical decisions to [Petitioner's] attorney," and that Petitioner's attorneys "handled the work of designing the configuration (pivot points, actuator length, linkage lengths, etc.) that appears in [Dr.] Velinsky's declaration." PO Resp. 32 (citing Ex. 2021, 14:12–17:11). According to Patent Owner, Dr. Velinsky "failed to consider whether or where *any* of the components of the machine disclosed in KR996 would be located in the modified machine, or whether those components would be compatible with the modifications he proposes" and thus failed to perform "any engineering analysis or assessment whatsoever." *Id.* at 33 (citing Ex. 2021, 130:14–132:6, 134:25–135:21). Patent Owner argues that, "[f]or this reason alone, his opinions are pure *ipse dixit* and should be disregarded." *Id.* We will not disregard the entirety of Dr. Velinsky's testimony based on these issues. Indeed, Patent Owner has failed to provide *any* legal basis for such a result based on these concerns. *See id.* at 32–33 (citing only Dr. Velinsky's deposition for this argument).

Third, Patent Owner argues that we should disregard all of Dr. Velinsky's declaration testimony because he "failed to consider any

objective indicia of non-obviousness—including the evidence that was an express part of the reexamination prosecution histories." PO Resp. 33 (citing Ex. 2021, 56:10–62:2). Again, we will not disregard the entirety of Dr. Velinsky's testimony based on this issue at least because Patent Owner has failed to provide *any* legal basis for such a result. *See id.* (citing only Dr. Velinsky's deposition for this argument).

Fourth, Patent Owner argues that we should disregard Dr. Velinsky's declaration testimony because he "freely admitted to conducting his analysis using impermissible hindsight." PO Resp. 33–34 (citing Ex. 2021, 52:21–56:9). We disagree. As argued by Petitioner, Dr. Velinsky did not "admit" to using "hindsight" in his analysis. *See* Pet. Reply 7. Rather, the cited deposition testimony walks through the process of Dr. Velinsky's analysis, which Patent Owner *now* characterizes in its argument as "hindsight." For example, in the Response, Patent Owner highlights and quotes a portion of testimony in which Dr. Velinsky acknowledges to have "list[ed] a limitation and then you [found] where it is in the prior art." PO Resp. 33–34 (quoting Ex. 2021, 54:7–10). That is not an admission of hindsight, but merely an acknowledgement of the process that constitutes an obviousness analysis. *See In re McLaughlin*, 443 F.2d 1392, 1395 (CCPA 1971) ("Any judgment on obviousness is in a sense necessarily a reconstruction based upon hindsight reasoning, but so long as it takes into account only knowledge which was within the level of ordinary skill at the time the claimed invention was made and does not include knowledge gleaned only from applicant's disclosure, such a reconstruction is proper."); *see also* Ex. 2021, 54:24–25 (Dr. Velinsky responding that "[w]e had to look to the claims to know what the technology was").

Fifth, Patent Owner contends that Dr. Velinsky's testimony regarding "mainframe" should be given "no weight" because Dr. Velinsky "applied a claim construction that was expressly rejected by the Board in the Institution Decision." PO Resp. 34 (citing Ex. 2021, 65:10–17; Dec. Inst. 19–25, 34). The record does not support this argument. In the deposition testimony highlighted by Patent Owner, counsel showed Dr. Velinsky his declaration from related IPR2025-00167, which included a statement in paragraph 74 about *Patent Owner's* proposed construction of "mainframe." Ex. 2021, 65:10–17. Counsel then asked if that was the construction Dr. Velinsky applied in his analysis, to which Dr. Velinsky did not reply directly but identified aspects with which he agreed, including that the purpose of the "mainframe" is to "support the loader as described." *Id.* at 65:18–25. Counsel then asked other questions (*id.* at 66:1–13) before returning to *again* ask whether Dr. Velinsky applied Patent Owner's construction in his analysis, to which he replied "Yes, I would say so." *Id.* at 66:14–17. Despite Dr. Velinsky's answer to the question at issue, the record is clear that neither he nor Petitioner *actually* applied Patent Owner's construction; indeed, we discuss below the dispute between the parties and declarants on the construction of "mainframe" and the application of that construction. *See* §§ II.E.3, II.F.2.a. Moreover, Patent Owner has not provided a legal basis to ignore *the entirety* of Dr. Velinsky's testimony on this basis.

As part of this argument, Patent Owner also highlights that Dr. Velinsky identified portions of the lower frame of bogies 30 and 50 in KR996 as part of the "mainframe," allegedly indicating his "improper and overly expansive view" of that term. PO Resp. 34–36 (citing Ex. 2021, 118:20–120:25) (reproducing Ex. 2022 (Velinsky Depo. Exhibit 2) at 15, 22

(showing pen identifying structures of the "mainframe" in KR996, Figs. 1 and 14)).[12] Despite Dr. Velinsky's over-identification of the structures making up the "mainframe" in KR996 *during his deposition*, again, the record is clear as to the structure in that reference that both he and Petitioner *actually* identified as the "mainframe." Nowhere in either of his declarations did Dr. Velinsky identify the lower frame of the bogie 30 (in Figure 1) or bogie 50 (in Figure 14) of KR996 as part of the "mainframe." *See, e.g.*, Velinsky Pet. Decl. ¶¶ 64–84 (addressing "loader support"), ¶ 124 & n.3 (addressing "rigid frame" and stating that Petitioner treated "loader support," "rigid frame," "machine structure," "mainframe" and "lower frame" the same in the analysis); Velinsky Reply Decl. ¶¶ 2–4. Although consistency would have been preferred, we do not view this over-identification during his deposition as a basis to reject the entirety of Dr. Velinsky's testimony.

Lastly, Patent Owner argues that Dr. Velinsky's opinions should be given "little weight" because Dr. Velinsky was unaware that Patent Owner had an expert and did not review Dr. Fleming's declaration. *See* PO Sur-reply 10–12 (citing *Juniper Networks, Inc. v. Correct Transmission LLC*, No. 2023-1046, 2024 WL 3517862 at *5 (Fed. Cir. July 24, 2024)).

The *Juniper Networks* decision relied upon by Patent Owner does not support the request to give the entirety of Dr. Velinsky's testimony "little weight." That Federal Circuit proceeding involved an appeal of two *inter*

[12] For the page numbering of Exhibit 2021, like Patent Owner, we cite to the native pagination (in the *upper* right corner) rather than the page numbered added for this proceeding (in the *lower* right corner).

partes review final decisions determining claims in two patents not unpatentable because petitioner had failed to show a reasonable expectation of success in the proposed combination. *Juniper Networks*, 2024 WL 3517862 at *1, *3, *5. The cited discussion addressed the reasonable expectation of success issue as to one patent, with the Federal Circuit concluding that the Board's determination was supported by substantial evidence. *Id.* at *5. The Federal Circuit expressly found petitioner's declarant's testimony to be "conclusory and not credible" before summarizing patent owner's declarant's "contradictory testimony" and the Board's findings in support of that testimony. *Id.* The Federal Circuit identified three issues that constituted substantial evidence supporting the Board's conclusion on reasonable expectation of success: (1) patent owner's declarant's contradictory testimony, (2) petitioner's declarant's failure to address certain unidentified issues discussed by patent owner's declarant, and (3) the Board crediting patent owner's declarant over petitioner's declarant. *Id.*

Put simply, the *Juniper Networks* decision did not involve similar facts to here, in which a petitioner's declarant was apparently unaware of a patent owner's declarant and did not review the declaration filed with the patent owner's response. And the *Juniper Networks* decision does not stand for the proposition that if a petitioner's declarant files a reply declaration that does not address all points raised in a declaration filed with a patent owner's response, the *entirety* of the testimony by petitioner's declarant should be given little weight or that Patent Owner *must* prevail on any given issue not addressed in the reply declaration. *See, e.g.*, PO Sur-reply 11 (arguing that Petitioner's "odd stratagem also renders [Dr.] Fleming's expert

testimony unrebutted" and that Petitioner's "bald attorney argument in its Reply provides no support for the Board to find in [Petitioner's] favor on these issues"). Instead, we address each factual and legal issue individually below, taking into account the entire record, which includes the Petition and Dr. Velinsky's two declarations.

C. Patent Owner's Motion to Exclude

1. Background

Patent Owner filed a Motion to Exclude (Paper 43, "PO Mot.") seeking to exclude Petitioner's Exhibits 1005, 1006, 1011, and 1014, which are English language translations of exhibits in either Korean or Japanese. Patent Owner contends Exhibits 1005, 1006, and 1014 should be excluded because the corresponding certificates of translation do not comply with 37 C.F.R. § 42.63(b) and fail to comply with Federal Rules of Evidence ("FRE") 602 and 604. *See* PO Mot. 2–6; *see also* Paper 49 (Patent Owner's Reply in Support of its Motion to Exclude, "PO Reply"). Patent Owner additionally seeks to exclude Exhibit 1011 because it is an English language translation that was not filed with a certificate of translation, as required by Rule § 42.63(b). PO Mot. 6–7. Petitioner opposes Patent Owner's Motion to Exclude. *See* Paper 47 ("Pet. Opp.").

After considering all of Patent Owner's and Petitioner's arguments, for the reasons discussed below, we deny Patent Owner's request to exclude Exhibits 1005, 1006, and 1014 and we determine that Patent Owner's request to exclude Exhibit 1011 is moot.

2. Analysis

"The moving party has the burden of proof to establish that it is entitled to the requested relief." 37 C.F.R. § 42.20.

a. Exhibits 1005, 1006, and 1014

Exhibit 1005 is an English language translation of Korean Patent No. 10-1041996. Exhibit 1006 is an English language translation of Japanese document JP2004-17705A. Exhibit 1014 is an English language translation of Korean Patent No. 10-1023528. A Certification of Translation signed by Takashi Maeshiro of HC Language Solutions, Inc., accompanies each of Exhibits 1005, 1006, and 1014. Ex. 1005 at 28; Ex. 1006 at 16; Ex. 1014 at 16. Each Certification of Translation is worded substantially the same except for the references to the document at issue and the source language being either Korean or Japanese. Exhibit 1005's Certification of Translation, for example, states:

> I, Takashi Maeshiro, on behalf of HC Language Solutions, Inc., do solemnly and sincerely declare, *to the best of my knowledge and belief*, that the attached text represents a translation of Korean Patent No. 10-1041996, that the translation was performed by HC Language Solutions, Inc., and that the translation represents a true, correct, and faithful translation from Korean to English in a form that reflects the intention and meaning of the original text.
>
> I hereby declare that all statements made herein of my own knowledge are true and *that all statements made on information and belief are believed to be true*; and further that these statements were made with the knowledge that willful false statements and the like so made are punishable by fine or imprisonment, or both, under Section 1001 of Title 18 of the United States Code.

Ex. 1005 at 28 (emphasis added).

Patent Owner argues that the Certifications of Translation do not comply with 37 C.F.R. §§ 1.68 and 42.63(b) because they "must be based on the affiant's personal knowledge and signed under penalty of perjury." PO Mot. 3; *see also id.* at 1–6; PO Reply 1–2. Patent Owner alleges that the Certifications of Translation are deficient because Takashi Maeshiro does not state that he "personally performed the translation, that he speaks the source language, or that he otherwise has the skills necessary to confirm each translation's accuracy." PO Mot. 4.

Rule 42.63 states: "When a party relies on a document or is required to produce a document in a language other than English, a translation of the document into English and *an affidavit attesting to the accuracy of the translation must be filed with the document*." 37 C.F.R. § 42.63 (emphasis added). Under our rules, the term "affidavit" is defined to include a declaration in lieu of an oath under rule 1.68. 37 C.F.R. § 42.2. Rule 1.68 allows for a declaration in lieu of an oath and states: "The declarant must set forth in the body of the declaration that all statements made of the declarant's own knowledge are true and that all statements made on information and belief are believed to be true."

Thus, our rules do not require attestation by a translator, or by a person who speaks the source language and has personally confirmed the accuracy of the translation. Further, our rules do not preclude attestation, for example, by an employee of a translation company based on information or belief. The phrase "[t]o the best of my knowledge and belief" in the Certifications of Translation indicates that Takashi Maeshiro may be attesting to the accuracy based on information and belief and not based solely on personal knowledge of the translation. *See, e.g.*, Ex. 1005.

Patent Owner submitted Takashi Maeshiro's LinkedIn page (Ex. 2046[13]) as evidence that he speaks Japanese but not Korean. PO Mot. 4–5. Patent Owner argues that Takashi Maeshiro's lack of ability to speak Korean undermines the veracity of the attestation in the Certifications of Translation for Exhibits 1005 and 1014, the Korean language translations, and, by extension, the attestation in the Certification of Translation for Exhibit 1006, the Japanese language translation. *Id.*

The LinkedIn page is silent as to whether or not Takashi Maeshiro speaks Korean. Ex. 2046. That silence does not lead to the conclusion that his Certifications of Translation fail to satisfy the requirement of 37 C.F.R. § 42.63(b). Nor does that silence sufficiently call into question his attestation that, based on information and belief, "the translation represents a true, correct, and faithful translation from Korean to English." *See, e.g.*, Ex. 1005 at 5.

Patent Owner cites to *Google LLC v. 138 East LCD Advancements Ltd.*, IPR2024-00958, Paper 43 at 53 (PTAB Dec. 18, 2025) (non-

[13] In its Opposition, Petitioner includes a section titled "Patent Owner's EX2046 Should be Excluded" in which Petitioner "moves to exclude Patent Owner's EX2046." Pet. Opp. 11. Petitioner contends that, during a February 23, 2026 conference call, the Board authorized a motion to exclude Exhibit 2046 as part of its Opposition. *Id.* We disagree. During the conference call, we explicitly denied Petitioner's request to file a motion to exclude Exhibit 2046, but we indicated that Petitioner could discuss in its Opposition to this Motion its concerns about the sufficiency of Exhibit 2046. We will not issue a decision on Petitioner's untimely motion to exclude Exhibit 2046. *Id.* at 11–12. In any event, we note that any motion by Petitioner to exclude Exhibit 2046 would be moot as we have denied Patent Owner's Motion here, finding Exhibit 2046 to be unpersuasive.

precedential) ("*Google*") and argues that the Board has excluded other English language translations due to a deficient certificate of translation attestation. PO Mot. 5–6; PO Reply 4–5.

Patent Owner's argument is unpersuasive because the circumstances here are not sufficiently similar to those in *Google*. *See* Pet. Opp. 6–7. In *Google,* a translation certification was signed by a project manager of a translation company, who attested to the following: "To the best of my knowledge, the aforementioned documents are a true, full and accurate translation of the specified documents." IPR2024-00958, Ex. 2003. The Board determined that the project manager's attestation was based on personal knowledge of the translation, that other evidence indicated that the project manager did not speak the source language, and that, when requested, the project manager was not made available for deposition as to the translation. *Google*, Paper 43 at 53–58. On the facts there, the Board excluded the translations, determining that, because the affiant was not made available for deposition, the opposing party was "unable to question the affiant and cannot directly test the affiant's veracity or challenge the affiant's basis for making the statements in the affidavit," which "contravenes 37 C.F.R. § 42.63(b) (2015) and the Board's Trial Practice Guide." *Google*, Paper 43 at 57–58. Thus, in *Google*, the Board did not exclude the English language translation based on the alleged deficiencies in the certificate of translation alone. Instead, the Board excluded the English language translation because the veracity of the project manager's attestation was in question and because the project manager was not made available for a deposition when requested.

In contrast, here, Patent Owner makes no allegation that the translations, themselves, are inaccurate, nor does the Patent Owner provide an alternate translation to show that Exhibits 1005, 1006, and 1014 translations are inaccurate. *See* Pet. Opp. 2–3. Patent Owner did not seek to depose Takashi Maeshiro about the Certifications of Translation. *Id.*

We are not persuaded by Patent Owner that the Certifications of Translation are deficient and do not comply with 37 C.F.R. §§ 1.68 and 42.63(b).

Based on its argument that a certificate of translation must be made by the translator, Patent Owner also argues that Exhibits 1005, 1006, and 1014 should be excluded under FRE 602 and 604. *See generally* PO Mot. 1–6.

Rule 42.62 states: "Except as otherwise provided in this subpart, the Federal Rules of Evidence shall apply to a proceeding." 37 C.F.R. § 42.62. Federal Rule of Evidence 604 states: "An interpreter must be qualified and must give an oath or affirmation to make a true translation." And FRE 602 states: "A witness may testify to a matter only if evidence is introduced sufficient to support a finding that the witness has personal knowledge of the matter. Evidence to prove personal knowledge may consist of the witness's own testimony."

Patent Owner does not persuade us that FRE 602 and FRE 604 apply to the circumstances here, where Rule 42.63(b) does not require an attestation by the translator (i.e., an interpreter) and does not preclude an attestation by an employee of a translation company, such as Takashi Maeshiro.

For the reasons above, we deny Patent Owner's Motion to Exclude as to Exhibits 1005, 1006, and 1014.

b. Exhibit 1011

Exhibit 1011 is an English language translation of Japanese Document No. 11-140900, which was not accompanied by a certificate of translation. Exhibit 1011 is machine-generated translation from the European Patent Office's website Espacenet.com, and it states "[i]t cannot be guaranteed that [the translation] is intelligible, accurate, complete, reliable or fit for specific purposes." Exhibit 1011 at 1–2.

Patent Owner seeks to exclude Exhibit 1011 for being a translation filed without an affidavit attesting to the accuracy of the translation as required by 37 C.F.R. § 42.63(b). PO Mot. 6–7; PO Reply 5. Patent Owner does not allege that Exhibit 1011 is an inaccurate translation and did not provide an alternative translation of Exhibit 1011. *Id.*

Patent Owner's request to exclude Exhibit 1011 is moot because we do not rely upon Exhibit 1011 in reaching our patentability determination in this proceeding.

D. Petitioner's Motion to Exclude

1. Background

Petitioner filed a Motion to Exclude seeking to exclude certain aspects of Patent Owner's exhibits. *See* Paper 42 ("Pet. Mot."); *see also* Paper 48 (Petitioner's Reply in Support of its Motion to Exclude, "Pet. Reply"). Patent Owner opposes Petitioner's Motion. *See* Paper 46 ("PO Opp."). Below, we address the issues raised as to Petitioner's Motion to Exclude.

2. Analysis

a. Embedded Documents and Deposition Testimony

Exhibits 1029, 2033, and 2034 are portions of the prosecution histories of Reexamination Control Nos. 90/014,269; 90/013,915; and

90/014,109, respectively. Patent Owner's arguments concerning objective indicia of nonobviousness in this proceeding cite to attorney argument concerning objective indicia of nonobviousness in these prosecution histories. *See* PO Resp. 63–82. For example, Patent Owner cites to a Supplemental Response to Office Action, found on pages 32–58 of Exhibit 2034. *See, e.g.*, PO Resp. 69 (citing Ex. 2034 at 39–41). As another example, Patent Owner cites to a slide presentation concerning objective indicia. *See, e.g.*, PO Resp. 67 (citing Ex. 2033 at 185). Embedded in the prosecution attorney argument are citations, quotes, reproduced charts, and other references to documents and deposition testimony, including from a district court litigation between Patent Owner and third-party, The Toro Company (the Iowa Litigation referenced above (*see* § I.B)); for example, the prosecution attorney argument quotes testimony from a deposition of Neil B. Borenstein. *See, e.g.*, Ex. 2034 at 39–41.

Although portions of the embedded documents and deposition testimony are also found elsewhere in the reexamination prosecution history, much of Patent Owner's objective indicia arguments here do not independently cite to the documents and deposition testimony, nor does Patent Owner independently provide in this proceeding the entirety of the documents and deposition testimony.

Petitioner moves to exclude the embedded documents and deposition testimony from Exhibits 1029, 2033, and, 2034 under FRE 802 because Patent Owner relies upon them in the Patent Owner's Response for improper hearsay purposes. Pet. Mot. 1–15. Petitioner argues that the embedded documents and deposition testimony are statements made outside of this proceeding, relied upon for the truth of the matter asserted. *Id.* at 2.

Patent Owner argues that the evidence does not constitute inadmissible hearsay in that Patent Owner does not rely upon the evidence for the truth of the matter asserted. PO Opp. 1–5. According to Patent Owner, it relies upon the evidence to show that the evidence was already considered by the Office. *Id.*

Patent Owner relies upon the embedded documents and deposition testimony for two purposes: first, to show that the Office considered the evidence during reexamination (*see* PO Resp. 63–65) and second, as evidence to support the objective indicia arguments here (*see id.* at 65–74). When Patent Owner relies upon the embedded documents and deposition testimony for the *first* purpose, we are persuaded by Patent Owner that the embedded documents are not hearsay because they are not offered for the truth of the matter asserted. *See* FRE 801(c). Thus, we do not exclude the embedded documents and deposition testimony when relied upon for the first purpose.

When the embedded documents and deposition testimony are relied upon for the *second* purpose, however, the evidence is inadmissible hearsay under FRE 802. For example, Patent Owner's arguments concerning long-felt but unresolved need cite to Exhibit 2034, pages 39 to 41 to show that customer's desired greater lift capacity. *See* PO Resp. 69. Embedded in the attorney argument at Exhibit 2034, pages 39 to 41 are quotations from a deposition of Neil Borenstein concerning Toro's work to satisfy its customer's alleged demand for lift capacity. The quotations are statements that were made outside of trial here and are offered as evidence to prove the truth of the matter asserted—i.e., that customer's desired greater lift capacity. Quotations from a deposition of Mr. Kuemper are also embedded

in the attorney argument. *See, e.g.*, Ex. 2034 at 37–38. Mr. Kuemper's testimony is likewise hearsay. We note that Patent Owner did not produce Mr. Borenstein or Mr. Kuemper for cross-examination, here, when requested by Petitioner. Pet. Mot. 11–14.

As another example, Patent Owner's arguments concerning commercial success cite to Exhibit 1029, page 223 and Exhibit 2033, page 185 to show that "Toro's 2015 Annual Statement similarly boasted a significant increase in compact utility loader sales following the launch of its TX1000 machine." PO Resp. 67.

The overlapping material from those pages is reproduced below:

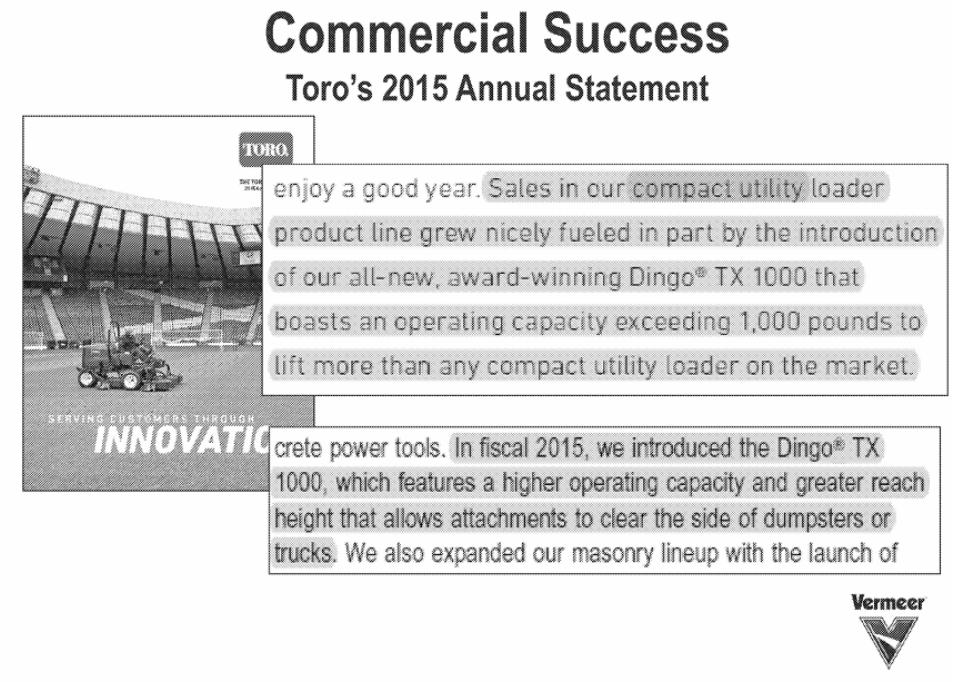

As can be seen from the above, the overlapping material is not Toro's 2015 Annual Statement, but rather, a slide with statements that may be from Toro's 2015 Annual Statement. As such, Exhibit 1029, page 223 and Exhibit 2033, page 185 are inadmissible hearsay.

For these reasons, we are persuaded by Petitioner to exclude, as inadmissible hearsay under FRE 802, all of the embedded documents and deposition testimony from Exhibits 1029, 2033, and 2034, when relied upon by Patent Owner in its substantive papers for the purpose of showing evidence of objective indicia.

Petitioner also moves to exclude the embedded documents and deposition testimony under FRE 403 because their probative value is substantially outweighed by the danger of unfair prejudice. *See, e.g.*, Pet. Mot. 4. Because we have already excluded the embedded documents and deposition testimony under FRE 802, Petitioner's additional request is moot.

b. Fleming Declaration (Exhibit 2016) ¶¶ 193–206

Petitioner moves to exclude paragraphs 193 to 206 of the Declaration of Dr. Fleming because those paragraphs simply parrot the hearsay statements concerning Toro's Development Story. Pet. Mot. 8; *see also* Pet. Reply 5. Petitioner seeks to "exclude portions of Dr. Fleming's declaration not because the declaration itself is hearsay, but because it contains a multitude of statements that are themselves hearsay, made by persons other than Dr. Fleming, which are then parroted in [his testimony] as if to provide substantive evidence." Pet. Mot. 8. According to Petitioner, FRE 703 "'does not authorize admitting inadmissible evidence' where the expert has 'added nothing to the inadmissible evidence other than transmitting it to the fact-finder.'" Pet. Reply 5 (quoting *Wi-LAN Inc. v. Sharp Elecs. Corp.*, 992 F.3d 1366, 1374 (Fed. Cir. 2021)).

Patent Owner responds that we should not exclude the identified portions of the Fleming Declaration because FRE 703 "expressly allows experts to rely on information in reaching their opinions, regardless of

whether the information is admissible." PO Opp. 13; *see id.* at 12–15 (entire argument).

Neither party, however, informs us *where* Patent Owner relies upon or cites to these paragraphs in support of its objective indicia argument or elsewhere in the substantive papers. Our review of the Patent Owner's Response and the Sur-reply did not reveal any citations to paragraphs 193–206 of the Declaration of Dr. Fleming. We deny the request to exclude paragraphs 193–206 of Dr. Fleming's testimony. As we ordinarily do not consider evidence not relied upon or cited in the substantive papers, Petitioner request to exclude paragraphs 193–206 of the Declaration of Dr. Fleming is moot.

Even if we were to consider the paragraphs at issue, we would give them little weight. These paragraphs relate to The Toro Company's development of a product. *See, e.g.*, Fleming Decl. ¶¶ 196–206. As Dr. Fleming is not associated with The Toro Company, his testimony as to events there would be of little persuasive value.

E. Claim Construction

1. The Applicable Standard

In *inter partes* reviews, the Board interprets claim language using the same claim construction standard that would be used in a civil action under 35 U.S.C. § 282(b), as described in *Phillips v. AWH Corp.*, 415 F.3d 1303 (Fed. Cir. 2005) (en banc). *See* 37 C.F.R. § 42.100(b). Under that standard, we generally give claim terms their ordinary and customary meaning, as would be understood by a person of ordinary skill in the art at the time of the invention, in light of the language of the claims, the specification, and the prosecution history. *See Phillips*, 415 F.3d at 1313–14. Although extrinsic

evidence, when available, may also be useful when construing claim terms under this standard, extrinsic evidence should be considered in the context of the intrinsic evidence. *See id.* at 1317–19.

2. Procedural History

In its initial filing, Petitioner proposed a construction for "barrier guard" in claims 19 and 25, but Petitioner stated that "no other claim term requires express construction." Pet. 18–19. Petitioner noted, however, that the Iowa District Court discussed constructions of certain claim terms (*id.* at 19 n.4). Following a *sua sponte* request by the Board (Paper 6), Petitioner filed an initial claim construction brief (Paper 9 ("Pet. Init. CC Br.")) and a reply claim construction brief (Paper 12 ("Pet. Reply CC Br.")) addressing the term "mainframe" in claims 1 and 19, and Patent Owner did the same (Paper 11 ("PO Init. CC Br."); Paper 13 ("PO Reply CC Br.")). Below, we address the parties' proposed constructions, including arguments during trial. *See* PO Resp. 26–30; Pet. Reply 8–13; PO Sur-reply 12–19.

In the Response, Patent Owner asserts that (1) "loader support" (in independent claims 1 and 14) and (2) "rigid frame" (in independent claim 7) should be construed the same as "mainframe" in independent claims 19 and 25. PO Resp. 26. Based on the complete record, we disagree. *See Bd. of Regents of the Univ. of Texas Sys. v. BENQ Am. Corp.*, 533 F.3d 1362, 1371 (Fed. Cir. 2008) ("Different claim terms are presumed to have different meanings.") (citing *CAE Screenplates Inc. v. Heinrich Fiedler GmbH & Co.*, 224 F.3d 1308, 1317 (Fed. Cir. 2000) ("In the absence of any evidence to the contrary, we must presume that the use of these different terms in the claims connotes different meanings.")). In the additional briefing requested by the Board, the parties did not provide a claim construction analysis of "loader

support" and "rigid frame," with Patent Owner's briefing failing to mention either term. *See generally* PO Init. CC Br.; PO Reply CC Br.

Based on the complete record and for purposes of this Decision, we construe the term "mainframe," as discussed below. We need not construe explicitly any of the other claim language discussed in this section or any other claim terms because doing so would not change the outcome of the analysis below. *See Realtime Data, LLC v. Iancu*, 912 F.3d 1368, 1375 (Fed. Cir. 2019) ("The Board is required to construe 'only those terms . . . that are in controversy, and only to the extent necessary to resolve the controversy.'" (quoting *Vivid Techs., Inc. v. Am. Sci. & Eng'g, Inc.*, 200 F.3d 795, 803 (Fed. Cir. 1999)).

3. "mainframe" (claims 19 and 25)

Limitation 19.1a in independent claim 19 and limitation 25.1 in independent claim 25 both recite "a machine structure comprising a mainframe and an upper frame," with other limitations (including limitations 19.3–19.5 and 19.7 as well as limitations 25.3–25.5 and 25.6b) referring back to the "mainframe." *See* Reexam Cert., 2:24–67 (claim 19), 3:1–4:19 (claim 25). In the briefing prior to institution in this proceeding, Petitioner proposed that "mainframe" should be construed "according to its plain and ordinary meaning, and not require a 'single weldment,'" with Petitioner adding that, "[t]o the extent the PTAB wants a specific construction, a 'mainframe' is a supporting structure of a vehicle." Pet. Init. CC Br. 5. At the same time, Patent Owner proposed that "mainframe" be "given its plain and ordinary meaning: the body of the compact tool carrier that supports the loader." PO Init. CC Br. 1; *see also* Prelim. Resp. 29 (same proposed construction). In the Decision on Institution, we preliminarily construed

"mainframe" under its plain and ordinary meaning as *a primary supporting structure* and we did not adopt Patent Owner's proposal that a "mainframe" must be "always present and not selectively removable." *See* Dec. Inst. 20–27. For the reasons below and based on the complete record at trial, we maintain the preliminary construction and we reject a similar additional requirement proposed by Patent Owner after institution.

We begin the analysis with the language of the claims. *TQ Delta, LLC v. DISH Network LLC*, 929 F.3d 1350, 1357 (Fed. Cir. 2019). The complete record developed at trial supports understanding the term "frame" in "mainframe" as a *supporting structure*. On this issue, Patent Owner provides an excerpt of a dictionary defining "frame" as a "rigid supporting structure." PO Resp. 27 (citing Ex. 2007 (excerpts of the Concise Oxford English Dictionary, tenth edition) at 3); *see also* Pet. Init. CC Br. 5 (stating that "a 'mainframe' is a supporting structure of a vehicle"). This dictionary definition does not contradict the "mainframe" described in the Specification or any other intrinsic evidence of record. *See, e.g.*, Ex. 1001, Fig. 4, 2:34–35 ("FIG. 4 is a perspective view of a mainframe of the compact tool carrier."); *see also Phillips*, 415 F.3d at 1322–23 (stating that judges may "rely on dictionary definitions when construing claim terms, so long as the dictionary definition does not contradict any definition found in or ascertained by a reading of the patent documents").

We now turn to the term "main" in the claim language "mainframe." In the claim construction briefing prior to institution, Patent Owner stated that the "body is the *primary frame* of the machine (*i.e.*, the core structure of the machine that is always present and not selectively removeable) to which

the other components attach." PO Init. CC Br. 1.[14] The complete record supports Patent Owner's argument as to *primary* in that the claim language at issue recites a "*main*frame" rather than merely a "frame." *See* PO Resp. 27 ("And the addition of 'main' to 'frame' simply indicates that this frame is the primary—or most important—frame of the vehicle." (citing Ex. 2007 at 4 (defining "main" as "chief in size or importance"))); *see also* Ex. 1006 (prior art reference JP2004017705A) ¶ 2 ("Conventionally, there have been various structures for *main frames which constitute a main part of a chassis* in various types of work vehicles for construction and civil engineering work, such as bulldozers, hydraulic excavators, and the like." (emphasis added)), *cited at* PO Init. CC Br. 2. Thus, the claim language itself supports construing "mainframe" as a *primary supporting structure*.

Having addressed the claim language, we turn to the Specification. We first address the sentence highlighted in the Board's request for additional briefing on claim construction: "As used herein, the term 'mainframe' generally refers to a single weldment to which the loader 8 is attached, optionally through one or more pivotal linkages." Ex. 1001, 4:13–16, *quoted at* Paper 6 at 3. In the request, the Board sought briefing on whether this sentence is (1) a lexicographical definition of "mainframe" or, in the alternative, (2) merely a description of an embodiment. Paper 6 at 3. The parties both responded that this sentence is *not* lexicographical, but rather, merely describes an embodiment. *See* PO Init. CC Br. 1–5; Pet. Init.

[14] We address below Patent Owner's position that the structures of the "mainframe" must be "always present and not selectively removeable."

CC Br. 1–4; PO Reply CC Br. 1 (noting agreement); Pet. Reply CC Br. 1 (same). For the reasons below, we agree with the parties.

"To act as a lexicographer, a patentee must 'clearly set forth a definition of the disputed claim term' and 'clearly express an intent to redefine the term.'" *Luminara Worldwide, LLC v. Liown Elecs. Co.*, 814 F.3d 1343, 1353 (Fed. Cir. 2016) (quoting *Thorner v. Sony Comput. Entm't Am. LLC*, 669 F.3d 1362, 1365 (Fed. Cir. 2012)). As argued by both parties, the presence of "generally" in the sentence at issue shows a lack of clear intent to redefine "mainframe." PO Init. CC Br. 3; Pet. Init. CC Br. 2; *cf. ParkerVision, Inc. v. Vidal*, 88 F.4th 969, 976–77 (Fed. Cir. 2023) (finding definitional the sentence "[s]torage modules and storage capacitances, on the other hand, *refer to* systems that store non-negligible amounts of energy from an input EM signal" (emphasis added)); *Sinorgchem Co., Shandong v. Int'l Trade Comm'n*, 511 F.3d 1132, 1136 (Fed. Cir. 2007) (finding definitional the sentence "[a] 'controlled amount' of protic material *is* an amount up to that which inhibits the reaction of aniline with nitrobenzene, e.g., up to about 4% H_2O based on the volume of the reaction mixture when aniline is utilized as the solvent" (emphasis added)).

Because the sentence at issue from the Specification is not lexicographical, we agree with the parties that "mainframe" is not limited to a single weldment. Pet. Init. CC Br. 1; PO Init. CC Br. 1–2. Instead, a single-weldment "mainframe" is merely one disclosed embodiment. *See* Pet. Init. CC Br. 3 (stating that "by including the term 'generally' in a statement, the feature (*i.e.*, single weldment) is expressly identified as merely included in some, but not all embodiments"); PO Init. CC Br. 3

("This language is merely exemplary, using reference numerals to refer to the embodiment's features and qualifying 'single weldment' as referring 'generally' to specific embodiments."). The Iowa District Court reached the same conclusion. *See* Ex. 1020 at 4 (holding that "'mainframe' will be given its plain and ordinary meaning and *does not require a single weldment*" (emphasis added)), *cited at* Pet. Init. CC Br. 2; *see also* 37 C.F.R. § 42.100(b) ("Any prior claim construction determination concerning a term of the claim in a civil action, or a proceeding before the International Trade Commission, that is timely made of record in the *inter partes* review proceeding will be considered.").

Turning to the prosecution history, neither Petitioner nor Patent Owner has highlighted any specific statements that impact the scope of the term "mainframe." And from our independent review, we do not discern any such statements. For these reasons, the intrinsic evidence as a whole supports construing "mainframe" as a *primary supporting structure*.

In the briefing after institution, both parties state that they agree with this construction. *See* PO Resp. 27 ("As the Board noted in the Institution Decision, the plain and ordinary meaning of 'mainframe' to [one of ordinary skill in the art] is 'primary supporting structure.'" (citing Dec. Inst. 19–25)); Pet. Reply 12 ("The Board's [Institution Decision] construction of ***mainframe*** as 'primary supporting structure' is correct . . . ."). Patent Owner's declarant, Dr. Fleming, also states to agree with this construction. Fleming Decl. ¶ 90 ("The plain and ordinary meaning of 'mainframe,' as that term has been preliminarily construed by the Board is 'the primary supporting structure' of the machine. In my view, this construction is consistent with the plain meaning of the words 'main' and 'frame' and their

use within the [challenged p]atent." (citing Ex. 2007)), *cited at* PO Resp. 27; *id.* ¶ 156 (agreeing with that construction).

But, essential to the analysis here, Patent Owner's agreement with the construction of "mainframe" discussed above is predicated on further interpreting the term "primary" (i.e., within the construction) as *precluding* any "supporting structure that is selectively removeable during various operations of the machine." PO Resp. 30 (citing Fleming Decl. ¶ 95); *see id.* ("The term 'mainframe' does not apply to attachments that are routinely disconnected and left aside while the machine continues to perform other work." (citing Fleming Decl. ¶¶ 93–95)). Stated differently, Patent Owner proposes that the term "primary"—i.e., in the language of the agreed-upon construction of "mainframe"—*requires* that any "supporting structure" comprising the "mainframe" must be "*always present* during all aspects of its operation." *Id.* (citing Fleming Decl. ¶ 95); *see also* Fleming Decl. ¶ 92 ("A person of ordinary skill in the art in February of 2015 would further understand that the 'primary' supporting structure refers to a fundamental part of the machine that is always present—not selectively removable—during all aspects of operation of the machine."). For the reasons below, we do not adopt Patent Owner's proposed "always present" requirement for the "mainframe." On this issue, we begin with the arguments and evidence provided prior to institution, and we then move to the arguments and evidence provided during trial.

As noted by Petitioner (Pet. Reply 8–9), prior to institution, Patent Owner proposed essentially the same additional requirement—that a "mainframe" must be "always present and not selectively removeable." *See* PO Init. CC Br. 1. In proposing that additional requirement for the

"mainframe," Patent Owner cited its own Preliminary Response (but in related IPR2025-00167, rather than this proceeding) and cited claims 1 and 5 of the challenged patent. *See id.* at 1–2. As acknowledged by Patent Owner, the Preliminary Response in IPR2025-00167 provides *argument* that certain structures in KR996 are not a "mainframe," but the briefing does not explain *the basis* for the additional requirement of "always present and not selectively removeable" because Patent Owner did not present that position until *after* its Preliminary Response. *See id.* at 1; *compare* Prelim. Resp. 25 ("As the *primary* frame of the compact utility loader, the 'mainframe' is the core structure of the machine to which the other components attach."), *with* PO Init. CC Br. 1 ("As Vermeer explained in its Patent Owner Preliminary Response ('POPR'), this body is the *primary frame* of the machine (*i.e.*, the core structure of the machine that is always present and not selectively removeable) to which the other components attach."). Patent Owner then summarized the added limitations of claim 5 of U.S. Patent No. 9,321,386 B1 (at issue in IPR2025-00167 through -00169), which also do not support the scope of "mainframe" in the independent claims here. *See* PO Init. CC Br. 1–2. As discussed in the Decision on Institution, in the pre-institution briefing, Patent Owner failed to explain how the record supported the additional requirement proposed. *See* Dec. Inst. 21–22.

In the briefing after institution, Patent Owner first cites to certain passages of the Specification as allegedly supporting that "the 'mainframe' represents the core structure of the machine to which the other components attach." *See* PO Resp. 27–28 (citing Ex. 1001, 2:6–7, 3:21–24, 3:65, 4:18–20, 4:21–24, 4:44–45, 5:65–66; Fleming Decl. ¶ 92). That the Specification generally discloses various structures attaching to the "mainframe,"

however, does not support Patent Owner's proposed "always present" requirement. Stated differently, that other structures are attached to the "mainframe" does not address the issue at hand, which is whether the structures comprising the "mainframe" must be *always present*.

Relatedly, Patent Owner highlights two U.S. Patents—No. 5,004,398 to Wagner (Ex. 2017) and No. 5,666,794 to Vought (Ex. 2018)—as allegedly disclosing configurations "similar to that found in KR996" and that distinguish between a "mainframe" and "*selectively removable*" attachments. *See* PO Resp. 28–30. As an initial matter, Patent Owner has not alleged or shown that either reference was discussed in the prosecution history, which would elevate them to the level of intrinsic evidence. *See, e.g.*, *Tate Access Floors, Inc. v. Interface Architectural Res., Inc.*, 279 F.3d 1357, 1371–72 n.4 (Fed. Cir. 2002) ("Prior art cited in the prosecution history falls within the category of intrinsic evidence. Prior art the examiner failed to consider is extrinsic.").

Further, although both references disclose a "main frame" (as in Wagner, or a "main frame assembly" as in Vought) as structure *separate from* removable attachments/tools, those references do not support a *per se* rule that any structure in a "mainframe" of a utility loader must be "always present"; indeed, neither reference discusses any such *temporal* requirement related to the structures in a "mainframe" (or "main frame assembly"). *See* PO Resp. 28–29 (citing Ex. 2017, Fig. 1, 3:22–62; Ex. 2018, Fig. 1, 3:45–50, 4:45–61, 5:40–55). To accept Patent Owner's argument here, we would have to infer that the "always present" requirement applies *globally* to any "mainframe" based on the exemplary embodiments disclosed in two

extrinsic prior art references, which do not address the issue. Patent Owner has not identified a legal basis for that approach.

Patent Owner also relies on the testimony of Dr. Fleming in support of the "always present" requirement. *See* PO Resp. 30 (citing Fleming Decl. ¶¶ 93–95). Specifically, Dr. Fleming testifies that "a skilled artisan would have understood that the mainframe of the machine encompasses only the *primary* supporting structure of the machine, and not any supporting structure that [is] selectively removable during various operations of the machine." Fleming Decl. ¶ 94; *see also id.* ¶ 92 ("A person of ordinary skill in the art in February of 2015 would further understand that the 'primary' supporting structure refers to a fundamental part of the machine that is always present—not selectively removable—during all aspects of operation of the machine."). In support, however, Dr. Fleming relies on Wagner and Vought, as discussed above, which we find unpersuasive. *Compare* Fleming Decl. ¶ 94 (citing passages of Wagner and Vought), *with* PO Resp. 28–29 (citing the same passages).[15]

In the Sur-reply, Patent Owner does not discuss additional argument or evidence supporting the "always present" requirement, but rather, attempts to refute Petitioner's arguments from the Reply Brief. *See, e.g.*, Pet. Reply 9–13; PO Sur-reply 13–17. Because the evidence and argument

[15] In a different paragraph, Dr. Fleming relies on Vought and two other U.S. patents (Exs. 2019 and 2020) for the proposition that "[c]onstruction machines with selectively removable equipment or attachments were well known in the art," but none of the cited passages from those references mentions "mainframe" or a similar term or addresses the scope of a "mainframe." Fleming Decl. ¶ 93.

provided by Patent Owner in this proceeding does not support the "always present" requirement, we do not include that additional requirement as part of the construction for "mainframe" applied below.

For the reasons above and based on the complete record at trial, we maintain the construction of "mainframe" in independent claims 19 and 25 under its plain and ordinary meaning as *a primary supporting structure*. In addition, we do not adopt Patent Owner's additional proposed requirement—i.e., that any "supporting structure" in the "mainframe" must be always present during all aspects of operation.

F. Asserted Anticipation and Obviousness of Claims 1–7, 10–13, and 28 Based on KR996

Petitioner asserts that claims 1–7, 10–13, and 28 of the challenged patent are anticipated by and would have been obvious based on KR996. Pet. 21, 22–59; Pet. Reply 13–16. Patent Owner provides arguments specifically addressing these asserted grounds. PO Resp. 37–42; PO Sur-reply 19–21. We first summarize aspects of the relied-upon prior art.

1. Overview of KR996

KR996 "relates to construction equipment for green building deconstruction work," and, more particularly, to equipment "that can enter narrow buildings and carry out dismantling work inside the building, and can easily attach and detach various dismantling equipment to the vehicle according to the form of the deconstruction work." Ex. 1005 ¶ 1.

Figure 1 of KR996 is reproduced below:

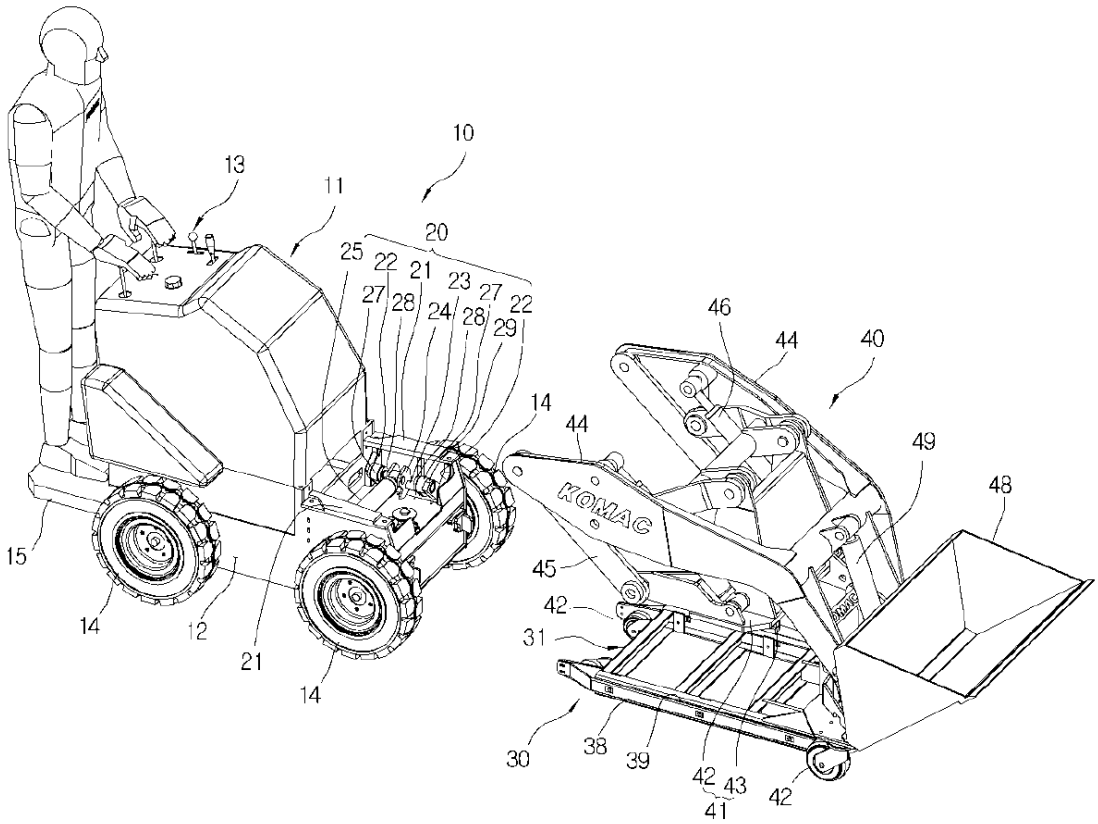

Figure 1 is a perspective view showing before loader unit 40 and bogie 30 are attached to vehicle 10. Ex. 1005 ¶¶ 40, 93. To attach bogie 30/loader unit 40 to vehicle 10, the operator shown on board at the rear uses control unit 13 to move vehicle 10 forward to engage detachable part 20 with fixture 41. *Id*. ¶¶ 42, 43, 54.

Figure 7 is reproduced below:

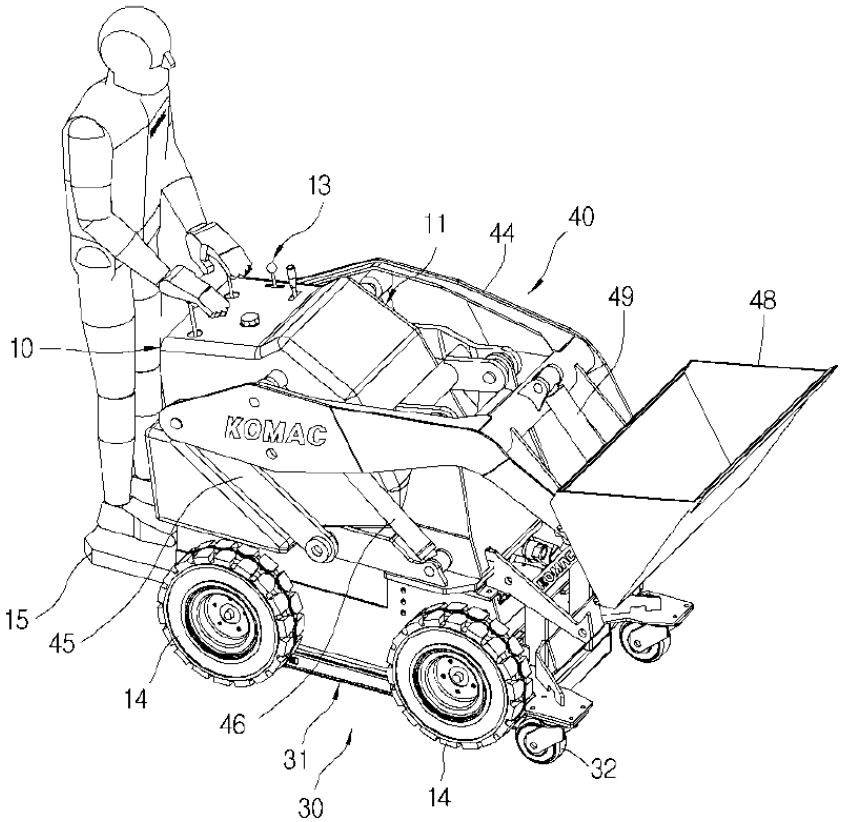

Figure 7 is a perspective view showing bogie 30 and loader unit 40 coupled to the detachable part of the vehicle. Ex. 1005 ¶¶ 40, 99. As shown in this Figure, vehicle 10 also includes (1) wheels 14 for moving vehicle 10, (2) linkage 45 to support boom 44, (3) actuator 46 to drive boom 44 upwards and downwards, and (4) bucket 48 to carry material. *Id.* ¶¶ 52, 54, 74.

2. Independent Claims 1 and 7

Petitioner contends that KR996 both anticipates and renders obvious independent claims 1 and 7. Pet. 24–37, 46–55. To support its arguments, Petitioner identifies certain passages in the cited references and explains the significance of each passage with respect to the corresponding claim limitation. *Id.* Patent Owner argues that KR996 does not disclose a "loader

support" (claim 1) or "rigid frame" and thus fails to disclose limitations requiring "linkage[s]" and an "actuator" attached to the "loader support" or "rigid frame." *See* PO Resp. 37–40; PO Sur-reply 19. In addition, Patent Owner presents evidence of objective indicia of nonobviousness. *See* PO Resp. 63–82; PO Sur-reply 27–30. We address each issue in turn.

a. The Loader Support Limitations (Claim 1) and the Rigid Frame Limitations (Claim 7)

Claim 1 recites, in relevant part, "[1.2] a loader support for supporting the loader, the loader support having a first side and a second side . . . ; [1.3] a first linkage pivotally attached to the first side of the loader support . . . ; [1.4] a second linkage pivotally attached to the first side of the loader support . . . ; [1.5] an actuator pivotally attached to the first side of the loader support." Ex. 1001, 6:52–60 (collectively, the "loader support limitations").[16] Claim 7 recites, in relevant part, "[7.3] a rigid frame for supporting . . . the loader, the rigid frame having a first side, a second side, a top, and a bottom; [7.4] a first linkage pivotally attached to the first side of the rigid frame . . . ; [7.5] an actuator pivotally attached to the first side of the rigid frame; [7.6a] a second linkage pivotally attached to the first side of the rigid frame." Reexam Cert., 1:34–44 (collectively, the "rigid frame limitations").

[16] Independent claim 14, challenged in the asserted ground of KR996, Bares, and Beltrami, recites substantially the same requirements in limitations 14.2 through 14.5. We refer to these limitations in claim 14 as the "loader support limitations" as well.

As to the recitation of "a loader support for supporting the loader, the loader support having a first side and a second side," Petitioner provides the following annotated versions of Figures 9 and 10 of KR996:

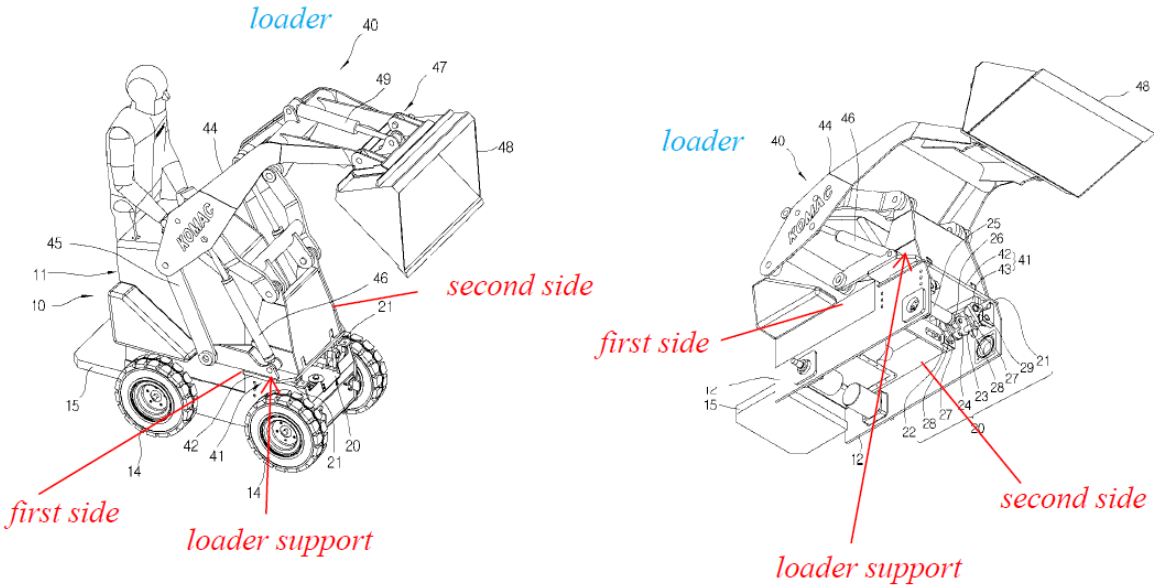

Pet. 27. In the annotated versions of Figures 9 and 10 of KR996 above, Petitioner added (1) red text and arrows identifying a "loader support," (2) red text and lines identifying a "first side" and a "second side," and (3) blue text identifying a "loader." *Id.* Petitioner adds that "KR996's loader support includes portions (brackets) to which the boom cylinder 48, link 45 attach to, portion of the lower frame where the forward link attaches, and/or other components that form a weight-bearing structure to support the loader and other features such as control station, drive mechanism." *Id.* (citing Velinsky Pet. Decl. ¶¶ 64–68).

As to the recitation of "a first linkage pivotally attached to the first side of the loader support," Petitioner provides the following annotated version of Figure 9 of KR996:

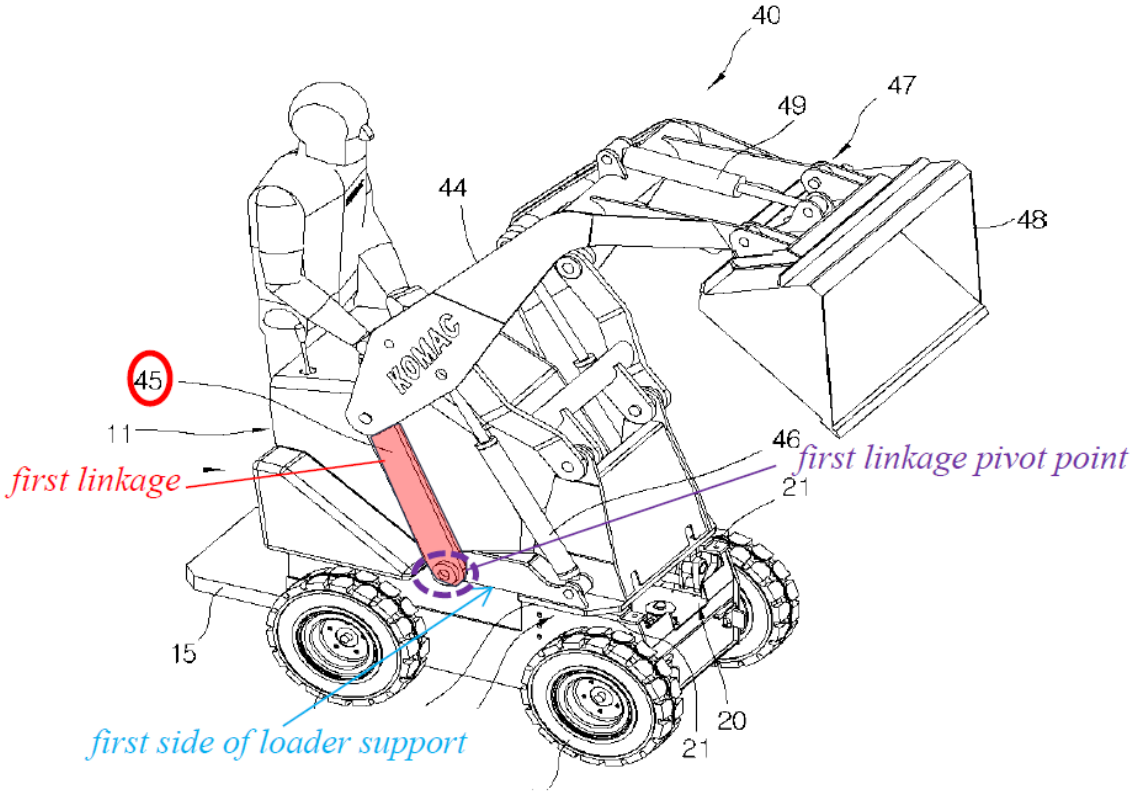

Pet. 29. In the annotated version of Figure 9 of KR996 above, Petitioner added (1) purple text and lines identifying a "first linkage pivot point," (2) red text and a line identifying a "first linkage," and (3) blue text and a line identifying a "first side of loader support." *Id.* Petitioner states that the "portion of the vehicle to which the link 45 is directly attached is part of the *loader support* as it supports (e.g., provides weight-bearing frame for) the loader unit 40." Pet. 29–30 (citing Velinsky Pet. Decl. ¶¶ 69–74).

As to the recitation of "a second linkage pivotally attached to the first side of the loader support," Petitioner provides the following annotated version of Figure 9 of KR996:

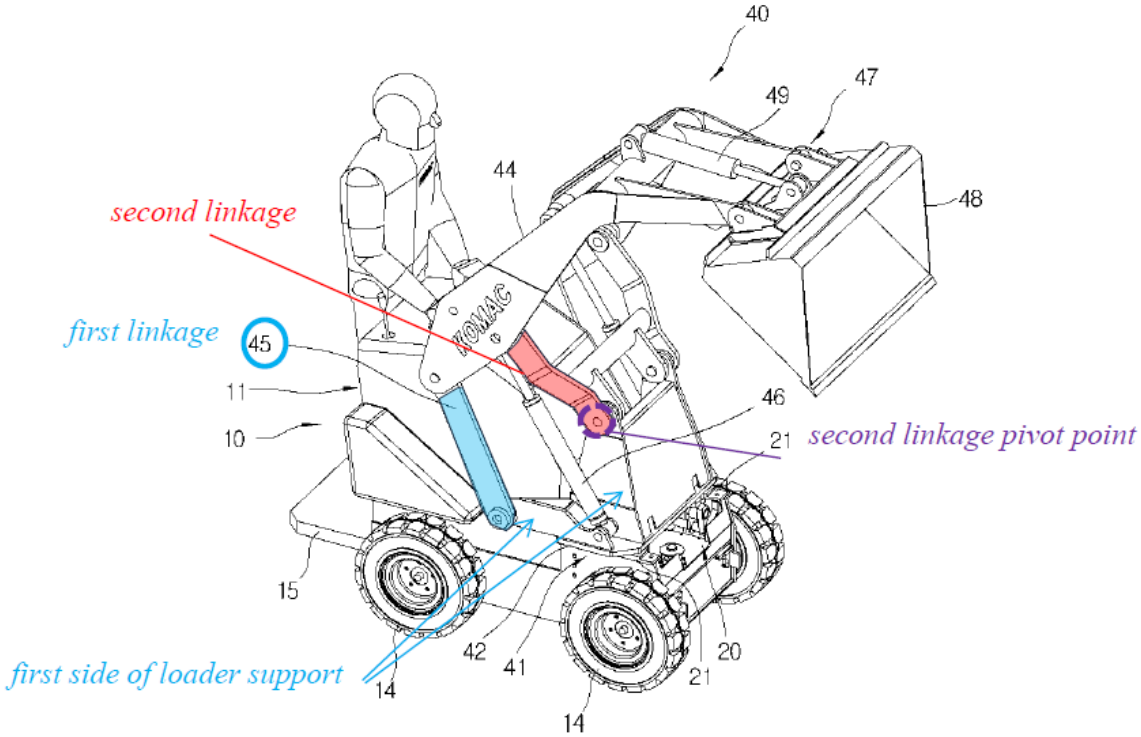

Pet. 30 (citing Velinsky Pet. Decl. ¶¶ 75–79). In the annotated version of Figure 9 of KR996 above, Petitioner added (1) purple text and lines identifying a "second linkage pivot point," (2) red text and a line identifying a "second linkage," (3) blue text and a line identifying a "first linkage," and (4) blue text and arrows identifying a "first side of loader support." *Id.*

Finally, as to the recitation of "an actuator pivotally attached to the first side of the loader support," Petitioner provides the following annotated version of Figure 9 of KR996:

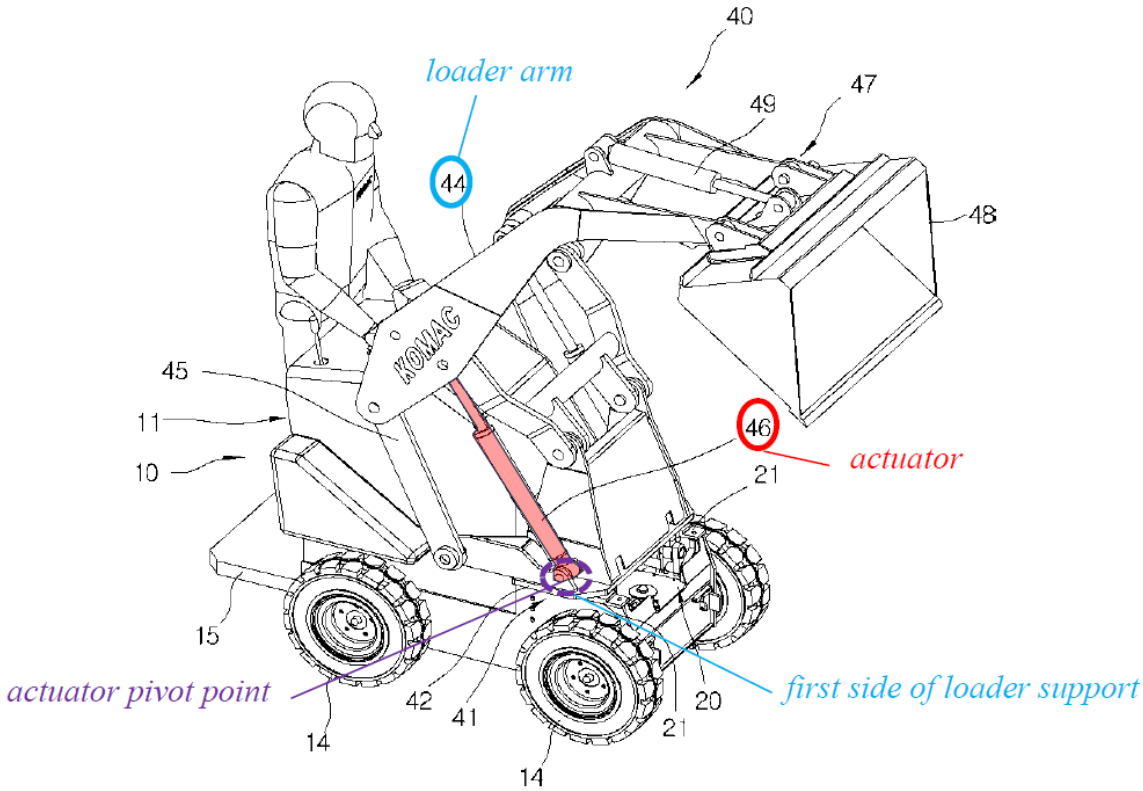

Pet. 32 (citing Velinsky Pet. Decl. ¶¶ 80–84). In the annotated version of Figure 9 of KR996 above, Petitioner added (1) purple text and a line identifying an "actuator pivot point," (2) red text and a line identifying an "actuator," (3) blue text and a line identifying a "loader arm," and (4) blue text and an arrow identifying a "first side of loader support." *Id.*

Turning to claim 7, for the recitation of "a rigid frame for supporting . . . the loader, the rigid frame having a first side, a second side, a top, and a

bottom," Petitioner provides the following annotated version of Figure 9 of KR996:

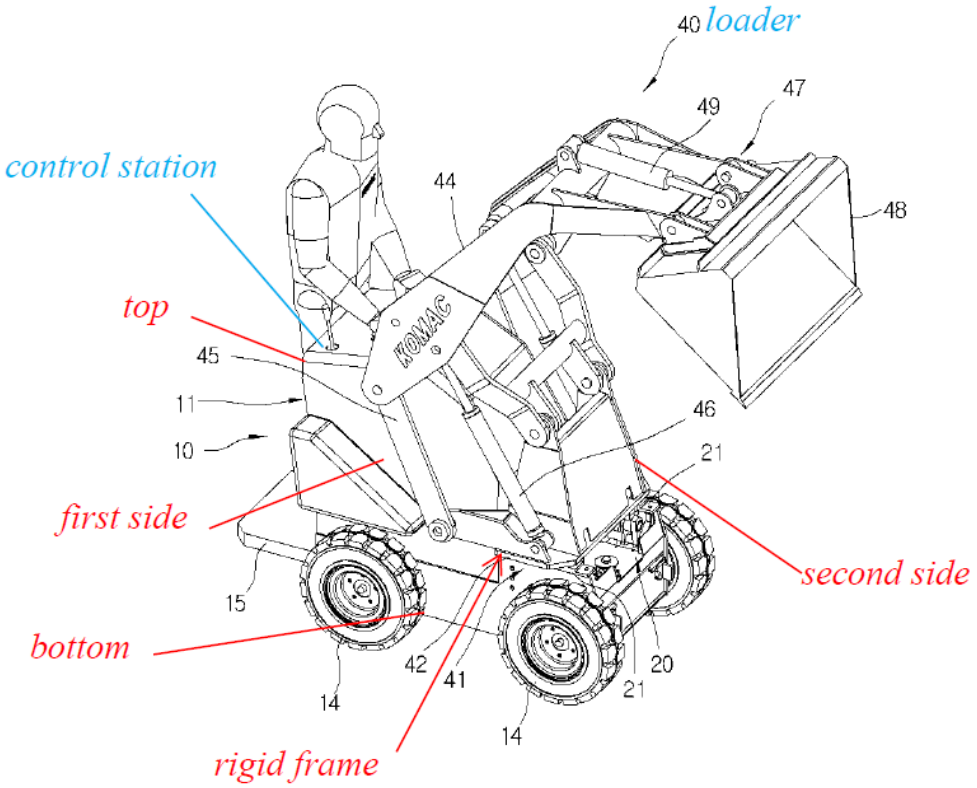

Pet. 48. In the annotated version of Figure 9 of KR996 above, Petitioner added (1) red text and lines identifying a "top," "first side," "bottom," and "second side," (2) red text and an arrow identifying a "rigid frame," (3) blue text and a line identifying a "control station," and (4) blue text identifying a "loader." *Id.* Petitioner adds that "KR996's *rigid frame* includes that supporting the loader unit 40 (e.g., attachment with links/boom cylinder) and the portion supporting the control station 13 (e.g., main body 11)." Pet. 47 (citing Velinsky Pet. Decl. ¶¶ 123–124). For the other recitations in the rigid frame limitations (in limitations 7.4, 7.5, and 7.6a), Petitioner relies substantially on the discussions of limitations 1.3–1.5 (summarized above). *See* Pet. 49–51 (citing Velinsky Pet. Decl. ¶¶ 125–129).

Patent Owner argues that KR996 fails to disclose or suggest the loader support limitations in claim 1 and the rigid frame limitations in claim 7. *See* PO Resp. 37–40; PO Sur-reply 19. Specifically, Patent Owner contends that, to satisfy the requirements that two "linkage(s)" and "an actuator" are "pivotally attached to the first side of" either a "loader support" or a "rigid frame," Petitioner and Dr. Velinsky "are forced to assert that the removable fixture (41) of the loader arm *attachment* [in KR996] constitutes a part of the 'mainframe' of the machine." PO Resp. 38 (citing Pet. 27–28; Velinsky Pet. Decl. ¶¶ 70, 76, 81). In support, Patent Owner provides this annotated version of Figure 1 of KR996:

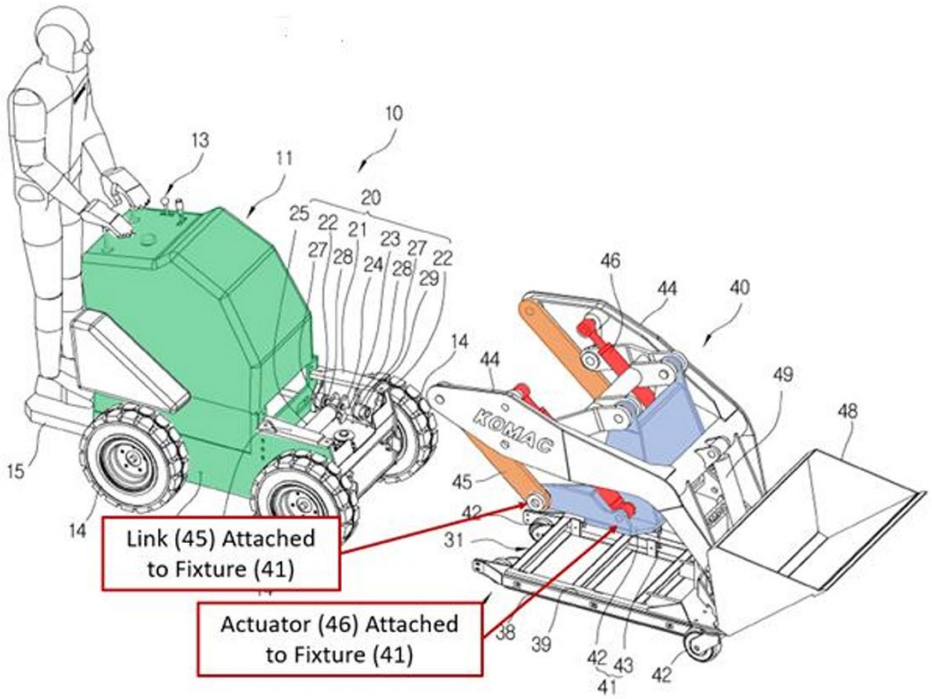

PO Resp. 38 (providing annotated Figure from Fleming Decl. ¶ 160). In the annotated version of Figure 1 of KR996 above, Patent Owner added (1) green shading on certain structures, (2) a text box and arrow identifying "Link (45) Attached to Fixture (41)," (3) a text box and arrow identifying

"Actuator (46) Attached to Fixture (41)," (4) orange shading identifying two links 45, (5) red shading identifying two actuators (i.e., boom cylinders) 46, and (6) blue shading identifying fixture 41. *Id.*

Patent Owner argues that one of ordinary skill in the art "would not consider the detachable fixture (41)"—in blue shading above—"to be a part of the mainframe (i.e., primary supporting structure) of KR996's machine." PO Resp. 39 (citing Fleming Decl. ¶¶ 162–169); *see also* PO Sur-reply 19 (repeating that one of ordinary skill in the art "would not consider the detachable fixture (41) of the KR996 loader unit to be part of the primary supporting structure of KR996's machine"). In support, Patent Owner contends that "KR996 expressly teaches that fixture (41) is routinely detached from the machine and left aside while the machine performs other work." PO Resp. 39 (citing Ex. 1005, code (57), ¶¶ 1, 11, 12, 13; Fleming Decl. ¶ 165).

According to Patent Owner, one of ordinary skill in the art "would consider fixture (41) to be *secondary* structure, in contrast to the true 'mainframe,' main body (11), which is present during all modes of operation (shown in green highlight below)":

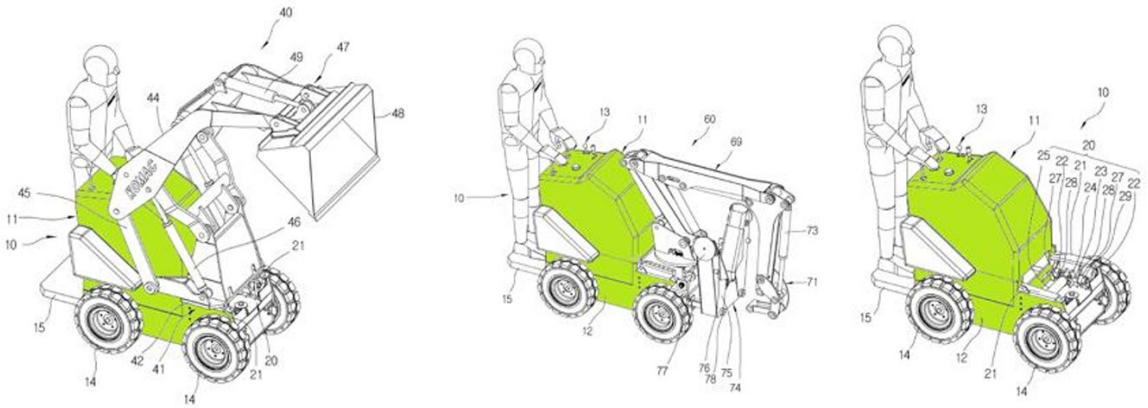

PO Resp. 39–40 (providing annotated Figure from Fleming Decl. ¶ 166). In the annotated versions of Figures 1, 9, and 19 of KR996 above, Patent Owner added green shading on certain structures. *Id.*

The dispute between the parties for this ground hinges on one factual determination: whether one of ordinary skill in the art at the time of the invention would have understood fixture 41 in KR996 (shaded in blue in the annotated Figure 1 three paragraphs above) (1) to be a "loader support" and (2) to be *part of* a "rigid frame" along with the agreed-upon "rigid frame" structures (shaded in green in both sets of annotated figures above).[17] For the reasons below, the complete record developed at trial more strongly supports Petitioner's position that one of ordinary skill in the art would have understood fixture 41 as a "loader support" and also as *part of* a "rigid frame."

Patent Owner presents arguments as to the grounds based on KR996 in this proceeding as if independent claims 1 and 7 recited the term "mainframe" (which they do not). *See* PO Resp. 37–40. As discussed above

[17] We use certain annotated figures from KR996 provided by Patent Owner in the discussion here to illustrate more easily the difference of positions between the parties as to the structures in KR996 that would have been considered a "loader support" and a "rigid frame." We note, however, that the combined structures identified by Patent Owner (1) in green (agreed upon as part of the "rigid frame") and (2) in blue (identified *only by Petitioner* as part of the "rigid frame") appear to be a subset of the structures identified by Petitioner as the "rigid frame." *See, e.g.*, Pet. Reply 13–14; Velinsky Reply Decl. ¶ 4; Pet. 27 (first sentence). Put simply, Petitioner's assertions as to the particular structures in KR996 comprising the "rigid frame" control over Patent Owner's *presented understanding* of Petitioner's positions.

(*see* § II.E.2), we do not agree with Patent Owner that (1) "loader support" (in independent claims 1 and 14) and (2) "rigid frame" (in independent claim 7) should be construed the same as "mainframe" in independent claims 19 and 25. Thus, we apply the plain and ordinary meaning of "loader support" or "rigid frame." *See* Ex. 1020 at 5 (the Iowa District Court stating that these terms "will be given their plain and ordinary meaning").

Limitations 1.2 and 7.3 make clear that the "loader support" and "rigid frame" each support the "loader." When configured for loader operations (which Patent Owner acknowledges KR996 discloses[18]), fixture 41 in KR996—i.e., the identified "loader support" (Pet. 26–28) and *part of* the identified "rigid frame" (Pet. 47–49)—"form a weight-bearing structure to support the loader" in KR996. *See* Pet. 26–27 (citing Velinsky Pet. Decl. ¶¶ 64–68 ("KR996's loader support is *for supporting the loader* as the loader unit 40 and its boom 44, the arm of the loader, is attached to it by way of the linkages and an actuator as discussed below. KR996's loader support includes brackets to which the boom cylinder 48, link 45 attach to, portion of the lower frame where the forward link attaches, and/or other components that for a weight-bearing structure to support the loader and other features such as control station, drive mechanism, and other features (e.g., body 11, side 12)." (second emphasis added)); Pet. 47–48 (citing Velinsky Pet. Decl. ¶¶ 123–124 ("The rigid frame, like the mainframe, loader support or machine structure, is known to provide a weight-bearing

[18] *See* PO Resp. 22 (discussing a "fifth mode" in which "the machine is operated with the loader attached to, for example, clear construction debris from the site").

frame for supporting components (e.g., control station, loader)."); *see, e.g.*, Ex. 1005, Figs. 7–9 (showing the vehicle of KR996 in operation).

The cited testimony of Dr. Velinsky supports these positions, explaining that one of ordinary skill in the art would have understood fixture 41 in KR996 to be a "loader support" and to be *part of* a "rigid frame." *See* Velinsky Pet. Decl. ¶ 65 ("KR996's loader support is *for supporting the loader* as the loader unit 40 and its boom 44, the arm of the loader, is attached to it by way of the linkages and an actuator as discussed below. KR996's loader support includes brackets to which the boom cylinder 48, link 45 attach to, portion of the lower frame where the forward link attaches, and/or other components that for a weight-bearing structure to support the loader and other features such as control station, drive mechanism, and other features (e.g., body 11, side 12)." (citing Ex. 1005, Fig. 21)), ¶ 124 ("The rigid frame, like the mainframe, loader support or machine structure, is known to provide a weightbearing frame for supporting components (e.g., control station, loader)."). In contrast, the pertinent testimony of Dr. Fleming addresses the loader support limitations and the rigid frame limitations as if they recited the term "mainframe" under Patent Owner's proposed construction. *See* Fleming Decl. ¶¶ 153–168; *see also id.* ¶ 156 (Dr. Fleming acknowledging that he construed "mainframe," "loader support," and "rigid frame" to have the same meaning).

For the reasons above, we find, based on the complete record, that Petitioner has shown by a preponderance of the evidence that KR996 discloses the loader support limitations and the rigid frame limitations.

b. The Remaining Limitations of Claims 1 and 7

To address the remaining limitations in claims 1 and 7, Petitioner discusses why KR996, both with and without modification, discloses each limitation. *See* Pet. 24–37, 46–55; Velinsky Pet. Decl. ¶¶ 57–92, 119–134. Patent Owner does not present arguments for these limitations.

We find, based on the complete record, that Petitioner has demonstrated by a preponderance of the evidence that KR996, both with and without modification, discloses the remaining limitations in claims 1 and 7. We also determine that, to the extent necessary, Petitioner has adequately explained why one of ordinary skill in the art would have had reason to modify KR996 as proposed and that there would have been a reasonable expectation of success.

c. Objective Indicia of Nonobviousness

(1) Legal Standards

Objective evidence of non-obviousness "may often be the most probative and cogent evidence in the record" and "may often establish that an invention appearing to have been obvious in light of the prior art was not." *Transocean Offshore Deepwater Drilling, Inc. v. Maersk Drilling USA, Inc.*, 699 F.3d 1340, 1349 (Fed. Cir. 2012). Thus, notwithstanding what the teachings of the prior art would have suggested to one skilled in the art, secondary considerations (objective evidence of non-obviousness) may lead to a conclusion that the challenged claims would not have been obvious. *In re Piasecki*, 745 F.2d 1468, 1471–72 (Fed. Cir. 1984). Our obviousness analysis includes consideration and weighing of Patent Owner's objective indicia of non-obviousness.

In order to accord substantial weight to secondary considerations in an obviousness analysis, "the evidence of secondary considerations must have a 'nexus' to the claims, i.e., there must be 'a legally and factually sufficient connection' between the evidence and the patented invention." *Henny Penny Corp. v. Frymaster LLC*, 938 F.3d 1324, 1332 (Fed. Cir. 2019) (quoting *Demaco Corp. v. F. Von Langsdorff Licensing Ltd.*, 851 F.2d 1387, 1392 (Fed. Cir. 1988)); *Quanergy Sys., Inc. v. Velodyne Lidar USA, Inc.*, 24 F.4th 1406, 1417 (Fed. Cir. 2022).

Although the patent owner bears the initial burden of proving a nexus (*WMS Gaming Inc. v. Int'l Game Tech.*, 184 F.3d 1339, 1359 (Fed. Cir. 1999)), a presumption of nexus may be appropriate if the patent owner shows "the asserted objective evidence is tied to a specific product and that product 'embodies the claimed features, and is coextensive with them.'" *Polaris Indus, Inc. v. Arctic Cat, Inc.*, 882 F.3d 1056, 1072 (Fed. Cir. 2018) (quoting *Brown & Williamson Tobacco Corp. v. Philip Morris Inc.*, 229 F.3d 1120, 1130 (Fed. Cir. 2000) (emphasis added)); *Quanergy*, 24 F.4th at 1417. On the other hand, "[w]hen the [product] is not coextensive with the patented invention—for example, if the patented invention is only a component of a commercially successful machine or process," the patent owner is not entitled to a presumption of nexus. *Demaco*, 851 F.2d at 1392.

A patent owner may establish nexus, either through (1) the use of a rebuttable presumption that arises when certain conditions are met or (2) a direct showing of nexus. In the first, a patent owner may rely on a rebuttable presumption of nexus as follows:

> As first recognized in *Demaco* . . . , a patentee is entitled to a rebuttable presumption of nexus between the asserted evidence

> of secondary considerations and a patent claim if the patentee shows that the asserted evidence is tied to a specific product and that the product "*is* the invention disclosed and claimed." 851 F.2d at 1392 (emphasis added). That is, presuming nexus is appropriate "when the patentee shows that the asserted objective evidence is tied to a specific product and that product 'embodies the claimed features, and is coextensive with them.'" *Polaris Indus., Inc. v. Arctic Cat, Inc.*, 882 F.3d 1056, 1072 (Fed. Cir. 2018) (quoting *Brown & Williamson Tobacco Corp. v. Philip Morris Inc.*, 229 F.3d 1120, 1130 (Fed. Cir. 2000)) . . .
>
> Whether a product is coextensive with the patented invention, and therefore whether a presumption of nexus is appropriate in a given case, is a question of fact.

Fox Factory, Inc. v. SRAM LLC, 944 F.3d 1366, 1373 (Fed. Cir. 2019).

The court in *Fox Factory* further explained, with respect to a presumption of nexus, that "the degree of correspondence between a product and a patent claim falls along a spectrum," and that, "[a]lthough we do not require the patentee to prove perfect correspondence to meet the co-extensiveness requirement, what we do require is that the patentee demonstrate that the product is essentially the claimed invention." *Id.* at 1374. The court in *Fox Factory* rejected the patent owner's argument that the co-extensiveness requirement is simply an inquiry into "whether the patent claims broadly cover the product that is the subject of the evidence of secondary considerations." *Id.* at 1377. Thus, simply showing that a patent claim broadly covers the commercial product being asserted as objective evidence of non-obviousness is not enough to show they are coextensive. *Id.* That is because "[a] patent claim is not coextensive with a product that includes a 'critical' unclaimed feature that is claimed by a different patent and that materially impacts the product's functionality." *Id.* at 1375. In

contrast, "if the unclaimed features amount to nothing more than additional insignificant features, presuming nexus may nevertheless be appropriate." *Id.* at 1374. Based on the facts of the case in *Fox Factory*, the court found that "nexus may not be presumed" because "there are one or more features not claimed by the [challenged patent] that materially impact the functionality" of the products on which patent owner's presumption argument is based and the court rejected arguments that the patent claims broadly cover the product. *Id.* at 1376–77.

"A finding that a presumption of nexus is inappropriate does not end the inquiry into secondary considerations," however. *Fox Factory*, 944 F.3d at 1373. "To the contrary, the patent owner is still afforded an opportunity to prove nexus by showing that the evidence of secondary considerations is the 'direct result of the unique characteristics of the claimed invention.'" *Id.* at 1373–74 (quoting *In re Huang*, 100 F.3d 135, 140 (Fed. Cir. 1996)). "Where the offered secondary consideration actually results from something other than what is both claimed and novel in the claim, there is no nexus to the merits of the claimed invention," meaning that "there must be a nexus to some aspect of the claim not already in the prior art." *In re Kao*, 639 F.3d 1057, 1068–69 (Fed. Cir. 2011).

Ultimately, we must weigh Patent Owner's objective evidence in the context of whether the claimed invention as a whole would have been obvious to a skilled artisan. *WBIP, LLC v. Kohler Co.*, 829 F.3d 1317, 1331–32 (Fed. Cir. 2016). Only if the patent owner presents a prima facie case of nexus does the burden of production shift to the patent challenger to adduce evidence showing that any commercial success or industry praise

was due to extraneous factors other than the patented invention. *Demaco*, 851 F.2d at 1393.

(2) Patent Owner's Argument

Patent Owner contends that evidence of secondary considerations show that the claimed invention is non-obvious. PO Resp. 63–82.

As we explained when granting part of Petitioner's Motion to Exclude, Patent Owner's secondary considerations arguments cite to attorney arguments concerning secondary considerations in reexamination prosecution histories (Exs. 1029, 2033, 2034). *See* § II.D.2.a. Patent Owner's citations are not pin-point citations and encompass many pages of attorney argument. *See, e.g.*, PO Resp. 70 (citing Ex. 2034 at 36–57 (21 pages of attorney argument)). Because the citations encompass many pages, it is difficult to ascertain what information in the cited pages Patent Owner is relying upon.

It is not the responsibility of the Board to develop undeveloped arguments hinted at in the papers. *See United States v. Dunkel*, 927 F.2d 955, 956 (7th Cir. 1991) ("Judges are not like pigs, hunting for truffles buried in briefs."); *DeSilva v. DiLeonardi*, 181 F.3d 865, 866–67 (7th Cir. 1999) ("A brief must make all arguments accessible to the judges, rather than ask them to play archaeologist with the record."). For this reason, our rules prohibit incorporating arguments by reference from one document into another document. 37 C.F.R. § 42.6 ("Arguments must not be incorporated by reference from one document into another document.").

In as much as Patent Owner is attempting to incorporate attorney arguments from the prosecution history into its substantive papers, when evaluating the merits of the Patent Owner's evidence of secondary

considerations, we will not consider the attorney argument from the reexamination prosecution history that are not sufficiently set forth in the Patent Owner's substantive papers in this proceeding. Even if we were to consider such arguments, they would be mere attorney argument. But mere attorney argument and conclusory statements that are unsupported by factual evidence are entitled to little probative value. *In re Geisler*, 116 F.3d 1465, 1470 (Fed. Cir. 1997); *Elbit Sys. of Am., LLC v. Thales Visionix, Inc.*, 881 F.3d 1354, 1359 (Fed. Cir. 2018) ("'[A]ttorney argument is not evidence' and cannot rebut other admitted evidence." (quoting *Icon Health & Fitness, Inc. v. Strava, Inc.*, 849 F.3d 1034, 1043 (Fed. Cir. 2017))).

To the extent that Patent Owner relies upon the evidence embedded in the attorney argument, we granted Petitioner's Motion to exclude the embedded documents and deposition testimony from Exhibits 1029, 2033, and 2034, when relied upon by Patent Owner for evidence of secondary considerations. We, thus, find Patent Owner's secondary consideration arguments based solely on the embedded documents and deposition testimony unpersuasive. Below, we address the remainder of Patent Owner's arguments and evidence.

(3) Reexamination Prosecution Histories

Patent Owner argues that Petitioner was obligated to address in the Petition evidence of secondary considerations that was presented during the reexaminations of the '386 patent. PO Resp. 64–65. Patent Owner asserts: Petitioner's "failure to address [Patent Owner's] substantial objective indicia evidence should weigh in favor of the validity of" the challenged patent. *Id.* at 65. Patent Owner also argues that "[c]urrent guidelines require a decision contradicting a previous USPTO ruling to state in detail why overturning the

earlier decision is warranted." PO Sur-reply 30 (citing Memorandum, "PTAB Consideration of Prior Findings of Fact and Conclusions of Law" (Sept. 16, 2025), "Memo").[19] According to Patent Owner, because Petitioner "has provided no compelling basis to contradict the Office's prior findings, the Board should find that the secondary-indicia evidence supports a finding of non-obviousness here." *Id.*

We are not persuaded by Patent Owner that because the reexamination examiner found the evidence of secondary considerations overcame the rejections at issue in the reexamination that we are required to do the same here. The Memorandum states:

> if the Board reaches an initial or final decision on a finding of fact or conclusion of law that is different than the prior finding or conclusion of the Office, district court, or the ITC, the Board shall explain in the institution or final written decision why a different outcome is warranted.

Memo 1. The Memorandum requires that the Board explain why a different outcome is warranted but does not mandate that the Board come to the same conclusion. *See id.*

A different outcome as to the patentability of the claims is warranted here because we are not evaluating the same ground of unpatentability that the examiner evaluated during the reexaminations. *See, e.g.*, Ex. 2034 at 10–16 (the reexamination examiner explaining why the evidence of secondary considerations overcame the prima facie showing of obviousness of a combination replacing a radial-lift arm of Dingo 322 Operator's

---

[19] *Available at* https://www.uspto.gov/sites/default/files/documents/Memo_re_prior_findings_of_fact_and_conclusions_of_law_9_16_25.pdf.

Manual, Dingo 322 Parts Catalog's compact utility load with a vertical-lift arm of JP11-140900 (Komatsu Ltd.) skid steer). Petitioner's grounds of unpatentability here rely primarily upon KR966, which is a reference that was not evaluated during the reexaminations.

A further difference exists between the reexamination proceedings and this *inter partes* review in that the Federal Rules of Evidence apply to *inter parte* reviews. *See* 37 C.F.R. § 42.62. As discussed above (*see* § II.D.2.a), much of the secondary considerations evidence offered here is inadmissible hearsay under FRE 802 in this proceeding.

(4) Nexus

To establish nexus, Patent Owner argues that Vermeer's (i.e., Patent Owner's) CTX50 and CTX100, as well as Toro's TX1000 are "covered by" the challenged patent. PO Resp. 66 (citing Fleming Decl. ¶ 191; Exs. 2023–2025). Petitioner responds that Patent Owner fails to establish the required nexus. Pet. Reply 29–30.

We do not need to reach a determination as whether Patent Owner has established the requisite nexus because we find that the admissible portion of Patent Owner's evidence of secondary considerations, even if nexus were presumed to exist, does not outweigh Petitioner's showing of obviousness.

(5) Commercial Success and Industry Praise

Patent Owner argues that evidence submitted during the reexaminations demonstrates commercial success. PO Resp. 67 (citing Ex. 1029 at 222, 223; Ex. 2033 at 185; Ex. 2034 at 128, 302). To the extent that Patent Owner relies on inadmissible hearsay evidence from the reexamination prosecution histories to support its argument, we find unpersuasive Patent Owner's arguments of commercial success and industry

praise. *See id.* at 66 (citing Ex. 1029 at 220; Ex. 2033 at 186 (reexamination presentation slide discussing an Innovative Iron Award)).

Patent Owner also submits an article from Compact Equipment Magazine to show alleged industry praise for Toro's and Patent Owner's compact utility loaders with vertical lift. PO Resp. 66–67 (citing Ex. 2026, 1–2). We give this evidence some weight, but find that this article does not outweigh Petitioner's showing of obviousness over the prior art.

(6) Skepticism at the Time of Invention

Patent Owner argues that "evidence submitted to the Patent Office during the reexaminations further demonstrated that at the time of [Patent Owner's] invention, there was skepticism within the industry that vertical lift was a viable option for compact utility loaders due to their small size and complexity." PO Resp. 67–68 (citing Ex. 2034 at 54; Ex. 2033 at 34; Ex. 1029 at 223; Ex. 2004 ¶ 7, Ex. 2005, Fig. 3). To extent that Patent Owner relies on inadmissible hearsay evidence from the reexamination prosecution histories, we find this argument unpersuasive.

Patent Owner also points to a statement from U.S. Patent Publication No. 2016/0244937 A1, which reads "the use of such high lift loader arms on a compact utility loader has been considered difficult if not impossible due to size and durability constraints." PO Resp. 68 (quoting Ex. 2004 ¶ 7). We give this evidence some weight, but find that it does not outweigh Petitioner's showing of obviousness over the prior art.

(7) Unexpected Results

Patent Owner argues that "[t]he prosecution histories relating to the [challenged p]atent also contained evidence showing that the claimed invention surpassed expectations." PO Resp. 69 (citing Ex. 2033 at 74,

182). Patent Owner relies upon no evidence other than inadmissible hearsay evidence from the reexamination prosecution histories to support its argument. We, thus, are not persuaded by Patent Owner's argument of unexpected results and thus, give this argument little weight.

(8) Long-felt but Unresolved Need

Patent Owner argues that "[t]he prosecution histories also contain significant evidence of a long-felt need for a solution to the problem of low lift capacity on compact tool carriers." PO Resp. 69; *see id.* at 69–73 (citing Ex. 2033 at 121, 173; Ex. 2034 at 16, 36–57) (entire argument). Patent Owner relies upon no evidence other than inadmissible hearsay evidence from the reexamination prosecution histories to support this argument. We, thus, are not persuaded by Patent Owner's argument of long-felt but unresolved need and thus, give this argument little weight.

(9) Copying

Patent Owner contends that when Petitioner "designed its first compact utility loader [(the SCL1000)] it intentionally copied the vertical-lift loader arm configuration claimed in" the '386 patent. PO Resp. 74; *see also id.* at 75. Patent Owner argues that, because Petitioner's dealer surveys indicate a desire for a vertical-lift compact utility loader and Petitioner performed competitor research, including researching Patent Owner's compact utility loader, Petitioner's SCL1000 must be a copy of the claimed invention of the challenged patent. *Id.* at 73–81. Patent Owner's evidence, however, does not persuasively show that Petitioner's SCL1000 is a copy of claimed invention of challenged patent. *See id.* at 81–82 (citing Ex. 2027 at 50–52, 114). Although Patent Owner's evidence broadly outlines design requirements for a vertical-lift compact utility loader, the evidence does not

depict or otherwise provide sufficient details so as to show that the SCL1000 is a copy of claimed invention of the challenged patent. *See* Ex. 2027 at 50–52, 114; *see also Liqwd, Inc. v. L'Oreal USA, Inc.*, 941 F.3d 1133, 1137 (Fed. Cir. 2019) ("Evidence of copying may include internal documents, direct evidence such as photos of patented features or disassembly of products, or access and similarity to a patented product."). We, thus, give Patent Owner's evidence of copying little weight.

(10) Conclusion as to Objective Indicia

We have considered, as a whole, all of Patent Owner's arguments and admissible evidence concerning secondary considerations. If we were to presume nexus, we give some weight to Patent Owner's admissible evidence of industry praise and skepticism at the time of invention.

d. Conclusion as to Claims 1 and 7

For the reasons discussed above (§§II.F.2.a–b), the evidence presented by Petitioner strongly indicates that claims 1 and 7 are anticipated by KR996 and would have been obvious based on KR996, as modified. For the reasons also discussed above (§ II.F.2.c), if we were to presume nexus, we give some weight to Patent Owner's admissible evidence of industry praise and skepticism at the time of invention in favor of nonobviousness. When considering all the evidence of obviousness and nonobviousness together (*see In re Cyclobenzaprine Hydrochloride Extended-Release Capsule Patent Litig.*, 676 F.3d 1063, 1079 (Fed. Cir. 2012)), we find Petitioner's strong evidence of obviousness outweighs Patent Owner's objective indicia of nonobviousness. Thus, we conclude Petitioner has demonstrated by a preponderance of the evidence that claims 1 and 7 are anticipated by KR996 and would have been obvious based on KR996.

3. Claims 2, 4–6, 10–12, and 28

For dependent claims 2, 4–6, and 28 (which depend from claim 1) and for dependent claims 10–12 (which depend from claim 7), Petitioner contends that KR996, both with and without modification, satisfies each limitation. Pet. 37–39, 41–46, 55–58; Velinsky Pet. Decl. ¶¶ 93–95, 102–118, 135–141. Patent Owner does not present any arguments specifically addressing claims 2, 4–6, 10–12, and 28 but rather relies on the arguments addressing independent claims 1 and 7. *See* PO Resp. 37–41; PO Sur-reply 19–21.

We determine, based on the complete record, that KR996, both with and without modification, discloses the subject matter of claims 2, 4–6, 10–12, and 28. We also determine that, to the extent necessary, Petitioner has adequately explained why one of ordinary skill in the art would have had reason to modify KR996 as proposed and that there would have been a reasonable expectation of success. Based on the complete record, including the objective indicia of nonobviousness, we determine that Petitioner has demonstrated by a preponderance of the evidence that claims 2, 4–6, 10–12, and 28 are anticipated by KR996 and would have been obvious based on KR996.

4. Claims 3 and 13

Claim 3 recites: "The loader apparatus as set forth in claim 1 wherein the loader support incorporates a single weldment." Ex. 1001, 7:9–10. Claim 13 recites: "The loader apparatus as set forth in claim 7 wherein the rigid frame incorporates a single weldment." *Id.* at 7:66–67. As to the scope of these claims, Patent Owner argues that these additional limitations "require[] that all of the portions of the mainframe constitute a single,

unitary weldment, as shown, for example, in the embodiment shown in Figure 4" of the challenged patent. PO Resp. 40 (citing Fleming Decl. ¶ 169). Petitioner, in contrast, asserts that "'incorporates' is an open-ended term analogous to *includes*." Pet. Reply 15 n.10 (citation omitted) (citing Ex. 1053 (Oxford Dictionary of English, third edition) at 4 (defining "incorporate" as "include")).

The complete record supports Petitioner's position. Specifically, based on the plain meaning of "incorporates," claims 3 and 13 require that the "loader support" and "rigid frame" each *includes*—rather than *is* or *constitutes*—a single weldment. *See* Pet. Reply 15 n.10 (citing Ex. 1053 at 4). In paragraph 169 of Dr. Fleming's Declaration, he merely repeats Patent Owner's claim construction position without evidence to support that position. *See* Fleming Decl. ¶ 169 ("Claims 3 and 13 depend from independent claims 1 and 7, respectively, and further require that the 'mainframe incorporates a single weldment.' This additional claim limitation requires that all of the portions of the mainframe constitute a single, unitary weldment, as shown, for example, in the embodiment shown in Figure 4 of the '266 patent." (with no citations)).

Although Patent Owner and Dr. Fleming state that the Figure 4 embodiment shows a "mainframe [that] constitute[s] a single, unitary weldment," neither explains the basis for that assertion. *See* PO Resp. 40; Fleming Decl. ¶ 169. As noted above, the Specification discloses an embodiment in which the "mainframe" is a "single weldment," but the Specification does not indicate that Figure 4 shows that embodiment. *See* Ex. 1001, 4:12–15. But claims 3 and 13 recite "loader support" and "rigid frame," respectively, rather than "mainframe." Further, even if Figure 4

does show a single-weldment embodiment, we will not limit the claims (including claims 3 and 13) to that embodiment solely on that basis, especially when the claim language recites a broader requirement. *See Anchor Wall Sys., Inc. v. Rockwood Retaining Walls, Inc.*, 340 F.3d 1298, 1306–07 (Fed. Cir. 2003) (stating that "the mere fact that the patent drawings depict a particular embodiment of the patent does not operate to limit the claims to that specific configuration").

In the Sur-reply, Patent Owner asserts that we should not reach this issue because it was not raised in the Petition. *See* PO Sur-reply 17–18. According to Patent Owner, at that time, Petitioner only argued "that it would have been obvious to weld 'portions' of KR996's frame together (to form a single weldment)." *Id.* at 18 (citing Pet. 39–40). We disagree.

Although Patent Owner is correct that Petitioner did not expressly present a claim construction for claims 3 and 13 in the Petition, there, Petitioner clearly provided *two alternative bases* for those claims: one applying Petitioner's current construction and one applying Patent Owner's. *See* Pet. 39–41 (citing Velinsky Pet. Decl. ¶¶ 96–101); *see also* Pet. 59 (citing Velinsky Pet. Decl. ¶¶ 142–143) (replying on the discussion as to claim 3 as to claim 13). Specifically, Petitioner first presented an argument under its own *broader* construction, stating that one of ordinary skill in the art "would have found it obvious to *incorporate* one or more portions of the loader support of KR996 as a *single weldment* as use of welding to join components of such a frame was a well-known method of fabrication." Pet. 39–40 (citing Velinsky Pet. Decl. ¶ 98). With the phrase "one or more portions," Petitioner includes the possibility that only one *portion* of the "loader support"/"rigid frame" is a single weldment, meaning that *the entire*

"loader support"/"rigid frame" need not be a single weldment, thereby falling within Petitioner's proposed construction, but not Patent Owner's. Indeed, this discussion is cited by Petitioner as including (even if implicitly) its broader claim construction argument. *See* Pet. Reply 14–15 & n.10 ("Thus, it is uncontested that KR996 teaches or renders obvious the relevant structure including a single weldment" and citing pages 39 and 40 of the Petition).

Second, after applying the broader construction, Petitioner presents an *alternative* argument applying the same narrower claim construction for claims 3 and 13 that Patent Owner ended up presenting in the Response:

> To the extent Patent Owner argues that certain components of the mainframe are required to be coupled together as a weldment, this is not recited by the open-ended term *incorporates*. However, as discussed above, [one of ordinary skill in the art] would have had reason to form KR996's loader support consisting of a *single weldment* recognizing the fastening method was well within their skill set and provides the benefits discussed above when predictably forming a welded structure. [Velinsky Pet. Decl.] ¶100 discussing unitary frame.

Pet. 40–41. Because Petitioner presented its broader construction of claims 3 and 13 in the Petition (Pet. 39–40, 59), we consider the issue of claim construction in this Final Decision.

Patent Owner also contends that Petitioner's broader construction should be rejected because "it reads the term 'single' out of the limitation entirely." PO Sur-reply 18. According to Patent Owner, "[a]ny construction that would allow the mainframe to include 'one or more portions' formed as a single weldment necessarily requires the term 'single' to mean *at least* one, rather than *only* one." *Id.* (quoting Pet. Reply 15). We again disagree.

One exemplary "loader support"/"rigid frame" falling within the scope of Petitioner's construction (with which we agree) could—contrary to Patent Owner's argument—comprise *only one* weldment (made of more than one portion) and have other portions that are held to the "loader support"/"rigid frame" with, for example, nuts and bolts. *See* Pet. 39–40 (discussing nuts and bolts as possible other fasteners in the context of this claim). For example, if the "loader support"/"rigid frame" was made up of five separate subcomponents ("portions") A through E, "some portions" (using Patent Owner's language)—say A through C—could be welded together in a "single weldment," and portions D and E could be fastened with nuts and bolts. That embodiment would fall within the scope of Petitioner's proposed construction and, contrary to Patent Owner's argument, still have *only one* weldment.

Patent Owner also raises an argument based on a statement by the examiner in an *ex parte* reexamination of U.S. Patent No. 9,321,386 B1 ("the '386 patent"), the grandparent to the challenged patent.[20] *See* Ex. 1001, code (63) (stating that the challenged patent's application was a continuation of a continuation of the application issuing as the '386 patent). Specifically, Patent Owner argues that Petitioner's broader construction of claims 3 and 13 "contradicts the USPTO's prior interpretation of this term, which has consistently been construed as a mainframe that '**comprises a single part**.'" PO Sur-reply 19 (citing IPR2025-00167, Ex. 1031 at 402).

[20] As noted above (*see* § I.B), claims of the '386 patent are challenged in related IPR2025-00167 through -00169.

As background, in a prior reexamination certificate issued April 12, 2018, the '386 patent included newly added claim 63, which had the same additional limitation as claim 2 in this proceeding: "wherein the mainframe incorporates a single weldment." IPR2025-00167, Ex. 1031 at 551. In a Detailed Request for *Ex Parte* Patent Reexamination filed the following day, as to claim 63, the requester relied on a parts catalog showing a mainframe allegedly consisting of a "single part." *Id.* at 512, 529 (showing filing date). In the first Office Action after granting the next reexamination, the examiner essentially agreed with the requester's argument as to the parts catalog disclosing a mainframe "compris[ing] a single part." *Id.* at 402. Patent Owner did not separately argue against that finding in the latter reexamination. *Id.* at 184–186.

The record here does not show that the USPTO agreed with Patent Owner's narrower construction of the claim language here. Instead, we view the reexamination examiner as merely acknowledging that a mainframe made of a "single part" (apparently welded) *clearly* falls within the scope of the claim language at issue in that it satisfies *both* possible constructions: (1) that the mainframe *includes* a single weldment (i.e., Petitioner's proposed construction here) and (2) that the mainframe *is* a single weldment (Patent Owner's proposed construction). Because Patent Owner's proposed construction is subsumed within the scope of Petitioner's proposed construction, and the reexamination examiner found that the prior art fell within the *narrower* construction, the Examiner did not have to address the particular claim construction issue before us now.

Although the reasons above are sufficient to support Petitioner's proposed construction of claims 3 and 13, an additional argument based on

claim differentiation, presented by Petitioner, further supports that conclusion. Specifically, in the Reply, Petitioner notes that related U.S. Patent No. 12,098,063 B2 (at issue in related PGR2025-00016 (*see* § I.B)) contains both dependent claim 3 (adding "wherein the mainframe is a single weldment")[21] and dependent claim 7 (adding "wherein the mainframe incorporates a single weldment"). *See* Pet. Reply 15. Because all five U.S. Patents challenged in these seven related proceedings share the same specification (all being continuations from the '386 patent[22]), we must interpret claim terms consistently across all the patents at issue. *See SightSound Techs., LLC v. Apple Inc.*, 809 F.3d 1307, 1316 (Fed. Cir. 2015) ("Where multiple patents 'derive from the same parent application and share many common terms, we must interpret the claims consistently across all asserted patents.'" (quoting *NTP, Inc. v. Research In Motion, Ltd.*, 418 F.3d 1282, 1293 (Fed. Cir. 2005))). Although "the doctrine of claim differentiation is not as strong across related patents as it would be if the different claim limitations appeared in the same patent" (*Clare v. Chrysler Grp. LLC*, 819 F.3d 1323, 1330 (Fed. Cir. 2016)), the presence of different language in claims 3 and 7 of the '063 patent provides at least some additional support for Petitioner's broader proposed construction of claims 3 and 13 in the patent challenged in this proceeding. For these reasons, the record supports, and we apply below, Petitioner's proposed construction of claims 3 and 13.

---

[21] Claim 3 is not challenged in PGR2025-00016.

[22] *See* PGR2025-00016, Ex. 1001, code (63) (listing all five patents in these proceedings as issuing from a string of continuation applications).

Turning now to the application, Petitioner presents two different arguments as to claims 3 and 13: one applying its own proposed construction and one applying Patent Owner's narrower construction. *See* Pet. 39–41, 59. First, applying its own proposed construction, Petitioner argues that one of ordinary skill in the art "would have found it obvious to *incorporate* one or more portions of the loader support of KR996 as a *single weldment* as use of welding to join components of such a frame was a well-known method of fabrication." Pet. 39–40 (citing Velinsky Pet. Decl. ¶ 98). Petitioner adds that one of ordinary skill in the art "would have recognized there are known trade-offs in the attachment choice between a weld and, for example, nuts and bolts," such as "aesthetics, manufacturability, [and] reliability of the connection." Pet. 40 (citing Velinsky Pet. Decl. ¶ 99). According to Petitioner, "[o]ne benefit is connecting pieces by a weld allows for forming a smooth, continuous surface." *Id.* (citing Velinsky Pet. Decl. ¶ 99). Petitioner notes Patent Owner did not contest during prosecution the finding that the added limitation in claims 3 and 13 would have been an obvious design choice. *Id.* (citing Ex. 1002 at 26, 63; *In re Larson,* 340 F.2d 965, 968 (CCPA 1965)). Second, Petitioner presents an alternative argument under Patent Owner's narrower construction. *See* Pet. 40–41.

Patent Owner does not address Petitioner's first argument, which applies Petitioner's construction of claims 3 and 13 (which we adopt above). Instead, Patent Owner presents arguments as if Petitioner had *only* argued a proposed modification of welding each of the identified "loader support" and "rigid frame" into a "single weldment"—i.e., under Patent Owner's narrower proposed construction. *See, e.g.*, PO Resp. 41 (stating that Petitioner and Dr. Velinsky "argue that [one of ordinary skill in the art]

would have been motivated to weld the main body (11) and fixture (41) together to create a single weldment mainframe"); PO Sur-reply 20 (arguing that Petitioner has "failed to establish that modifying KR996's frame to have a single-weldment mainframe would have been obvious" to one of ordinary skill in the art).

On the complete record, we find that Petitioner has shown by a preponderance of the evidence that KR996 discloses or suggests the additional limitations of claims 3 and 13, under Petitioner's broader construction (which we apply above). As noted by Petitioner (Pet. Reply 14–15), Dr. Fleming acknowledges that both KR996's fixture 41 (for the analysis of claims 3 and 13) and main body 11 (for the analysis of claim 13)[23] are most likely entirely welded. Ex. 1043 (Fleming Depo. Tr.), 113:12–114:9. We agree with that assessment and find that KR996 implicitly teaches both fixture 41 and main body 11, individually and collectively, as including at least some welded sub-structures. Because the record supports Petitioner's position that fixture 41 in KR996 is a "loader support" (*see* § II.F.2.a) and that fixture 41 implicitly includes at least some welded sub-structures, that logically leads to a determination that the identified "loader support" *includes* a "single weldment," as required by claim 3. Further, because the record supports Petitioner's position that main body 11 and fixture 41 in KR996 together constitute a "rigid frame" (*see* § II.F.2.a) and that *both* fixture 41 and main body 11, individually and

[23] As a reminder, Petitioner identifies fixture 41 in KR996 as the "loader support" of claim 3 and identifies main body 11 and fixture 41 as the "rigid frame" of claim 13. *See* § II.D.2.a.

collectively, implicitly include at least some welded sub-structures, that logically leads to a determination that the identified "rigid frame" *includes* a "single weldment," as required by claim 13.

Moreover, even if KR996 would not have been understood as implicitly teaching at least some welding within fixture 41 or main body 11, we are also persuaded by Petitioner's argument that one of ordinary skill in the art would have had technical reasons to weld together, for example, *at least some* of the (potential) sub-structures of fixture 41 or main body 11. *See* Velinsky Pet. Decl. ¶¶ 98–99, *cited at* Pet. 39–41; *see also* Velinsky Pet. Decl. ¶¶ 142–143, *cited at* Pet. 59. For example, Dr. Velinsky raises potential benefits to welding, such as reliability of the attachment, aesthetics, and structural rigidity. *Id.* ¶ 99. Patent Owner does not address or show deficiencies in these arguments or testimony.

For these reasons, we determine, based on the complete record, including the objective indicia of nonobviousness, that Petitioner has demonstrated by a preponderance of the evidence that claims 3 and 13 would have been obvious based on KR996.

G. Asserted Obviousness of Claims 8 and 9 Based on KR996 and Bares

Petitioner asserts that claims 8 and 9 would have been obvious based on KR996 and Bares. Pet. 21, 59–64. Patent Owner does not present any arguments specifically addressing claims 8 and 9 in the context of this asserted ground, but rather, relies on the same arguments presented as to the prior ground. *See* PO Resp. 42.

We determine, based on the complete record, that the combination of KR996 and Bares discloses the subject matter of claims 8 and 9. We also

determine that Petitioner has adequately explained why one of ordinary skill in the art would have had reason to combine KR996 and Bares as proposed and that there would have been a reasonable expectation of success. Based on the complete record, including the objective indicia of nonobviousness, we determine that Petitioner has demonstrated by a preponderance of the evidence that claims 8 and 9 would have been obvious based on KR996 and Bares.

H. Asserted Obviousness of Claims 14–16 and 19–27 Based on KR996, Bares, and Beltrami

Petitioner asserts that claims 14–16 and 19–27 would have been obvious based on KR996, Bares, and Beltrami. Pet. 21, 64–103; Pet. Reply 16–29. Patent Owner provides arguments specifically addressing this asserted ground. PO Resp. 42–63; PO Sur-reply 21–27. We first summarize aspects of the relied-upon prior art.

1. Overview of Bares

In this asserted ground, Petitioner relies on Bares, in addition to KR996 (summarized above (*see* § II.F.1)). Bares discloses a small loader. Ex. 1010, 1:9–11.

Figures 6 and 8 Bares are reproduced below:

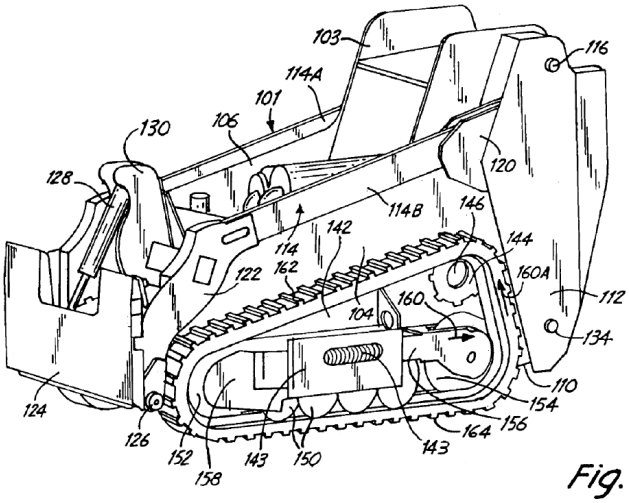

Fig. 6

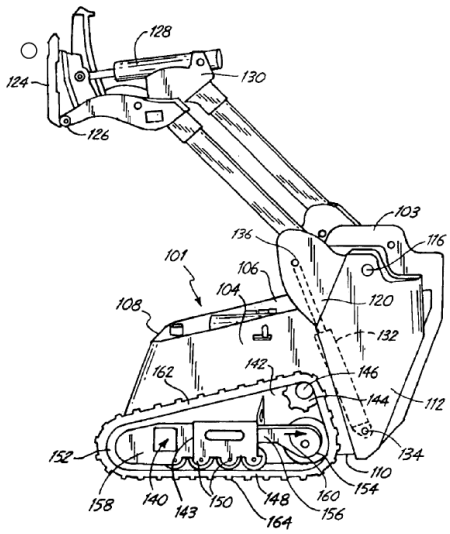

Fig. 8

Figure 6 is a side perspective view of "a modified form of the invention schematically showing an alternate form of track drive and modified loader arms," and Figure 8 is a perspective view showing the lift arms of the Figure 6 embodiment in a raised position. *See* Ex. 1010, 2:24–27, 2:30–31. In the depicted embodiment, track 148 can be placed over drive sprocket 144, and wheels 150/152/154 "so there is a full drive assembly made apart from the loader body." *Id.* at 6:12–17.

2. Overview of Beltrami

Beltrami discloses "a digging and lifting device of the type comprising a grabbing and excavating bucket." Ex. 1008, 1:6–8.

Figure 3 of Beltrami is reproduced below:

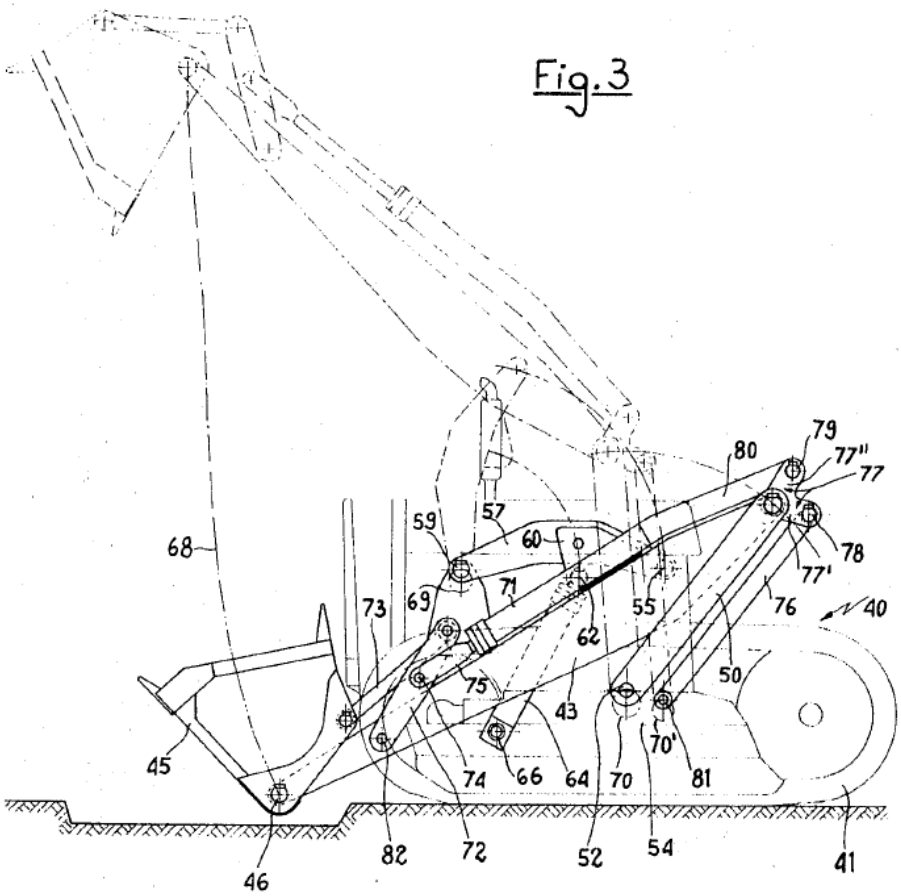

Figure 3 is a side view of a tracked power shovel fitted with a standard bucket. Ex. 1008, 2:28–30. Depicted tractor 40 includes movable tracks 41/42, as well as arms 43/44, which perform digging and lifting motions and are connected to bucket 45 at pivot points 46/47. *Id.* at 4:8–11. Beltrami discloses that the pivot point configuration shown allows the bucket to travel in a substantially vertical path (reference number 68) from the starting position (shown in dark lines) to the final position (shown in dashed-dotted lines). *Id.* at 4:25–34. Bucket 45 can be tilted through operation of hydraulic jack 71. *See id.* at 4:59–63. According to Beltrami, the invention benefits from the pivot points being "kept in such a low

position on the vehicle that no supporting frame is needed . . . and finally a lifting can be performed without having the equipment gravity center to undergo an unnecessarily large shifting." *Id.* at 3:35–41.

3. Independent Claims 14, 19, and 25

For independent claims 14, 19, and 25, Petitioner contends that the proposed combination of KR996, Bares, and Beltrami discloses each limitation. Pet. 66–87, 88–95, 98–103; Pet. Reply 16–29. Patent Owner challenges the articulated reasons to combine KR996, Bares, and Beltrami and argues that the proposed combination would not have resulted in the "vertical distance" limitations. *See* PO Resp. 51–63; PO Sur-reply 21–27. We view this issue as dispositive for this ground, and we address it below.

a. The Reasons to Combine KR996 and Bares with Beltrami & the Vertical Distance Limitations

Petitioner provides reasons to combine KR996 and Bares in the context of this ground. *See* Pet. 66–67. Before summarizing the reasons to combine KR996/Bares with Beltrami, for background, we first introduce the relevant limitations in claims 14, 19, and 25.

Independent claim 14 substantially tracks independent claim 7, except for limitations 14.6a–c. *See, e.g.*, Pet. 71 (citing limitations in claim 7 for most limitations in claim 14). In relevant parts, limitation 14.6a defines as "D5" the vertical distance from the rotational axis R of the drive sprocket to the bottom of the first side of the loader support, and limitation 14.6c defines as "D1" the vertical distance from the rotational axis R of the drive sprocket to the bottom of the loader apparatus. *See* Ex. 1001, Fig. 2 (showing D1 as defined), Fig. 5 (showing D5).

Then, limitation 14.6c recites four requirements (which we collectively refer to as the "vertical distance" limitations): (1) the vertical distance between the rotational axis R and the "first pivot point" is less than 1.5 times D1; (2) the vertical distance between the rotational axis R and the "third pivot point" is less than 1.5 times D1; (3) the vertical distance between the rotational axis R and the "fifth pivot point" is less than 1.5 times D1; and (4) the vertical distance between the rotational axis R and the "forward-most pivot point" (of the "first pivot point" and the "third pivot point") is less than 0.75 D5. Reexam Cert., 2:8–23.

In limitations 19.9 and 19.10, independent claim 19 defines "D1" the same as claim 14 and recites requirements (1)–(3) as organized above. *See* Reexam Cert., 2:53–67. Similarly, in limitations 25.7 and 25.8, independent claim 25 defines "D1" the same as above and recites requirements (1)–(3) as organized above. *See* Reexam Cert., 4:5–19. Petitioner relies on Beltrami to address the "vertical distance" limitations in limitation 14.6c, 19.10, and 25.8. *See* Pet. 79–87 (limitation 14.6c), 91 (referring to the discussion of limitation 14.6c for limitation 19.10), 100 (referring to the discussion of limitations 14.6a and 14.6c for limitation 25.8). We turn now to the added reasons to combine KR996/Bares with Beltrami.

Petitioner first explains why KR996/Bares and Beltrami are analogous art to the challenged patent. *See* Pet. 68. Then, Petitioner discusses how one of ordinary skill in the art "would have been motivated to combine the teachings of Beltrami including locating the pivot point attachment of intermediary parts **low** on the mainframe [of KR996-Bares] to produce a predictable and beneficial loader configuration." *Id.* (citing Velinsky Pet. Decl. ¶¶ 167–170). Petitioner adds that KR996 and Beltrami describe

similar loader arm configurations and "Beltrami explains the well-known knowledge in vehicle designs and four-bar mechanisms: the locations of the pivot point connections between the linkages and the mainframe are result-affecting variables that can be selected based on desired performance." Pet. 68–69 (citing Ex. 1005, Figs. 8, 9; Ex. 1008, Figs. 2, 3, 6, 4:35–50, 5:61–67). Petitioner contends, therefore, that one of ordinary skill in the art "would have recognized that a design of a vehicle such as KR996's includes determining pivot point locations, because it was well-known that pivot point locations are result-affecting design variables for desired performance, as explained by Beltrami." Pet. 69 (citing Velinsky Pet. Decl. ¶ 167).

Petitioner asserts that,

> In considering the pivot point locations, [one of ordinary skill in the art] would have had reason to further apply Beltrami's teachings of locating the pivot point attachments between the intermediate parts (linkage(s)/actuator) and the mainframe **low** on the mainframe, near the rotational axis such that the distance between the pivot points and the axis is, for example, less than the distance between the axis and the ground/bottom of the mainframe.

Pet. 69 (citing Velinsky Pet. Decl. ¶¶ 168–170). According to Petitioner, (1) Beltrami describes the benefit of this modification as "decreasing the frame requirements and maintaining a low center of gravity" and (2) one of ordinary skill in the art "would recognize that these benefits stem from basic engineering principles." *Id.* (citing Ex. 1008, 3:35–41; Velinsky Pet. Decl. ¶¶ 168–169). Petitioner adds that the proposed combination is:

> merely applying a known technique to a known device (*e.g.*, Beltrami's technique of providing low pivot points in a vehicle using intermediate parts for connecting a loader arm, with KR996's using pivotally attached connections between the

> loader arm and intermediate parts) ready for improvement (*e.g.*, decreasing the frame requirements and/or lowering the center of gravity) to yield predictable results.

Pet. 70 (citing Velinsky Pet. Decl. ¶ 170). Petitioner also discusses why the proposed combination would have had a reasonable expectation of success. *See id.* (citing Velinsky Pet. Decl. ¶¶ 171, 195–214).

Among Patent Owner's arguments addressing this ground, Patent Owner asserts that Beltrami would *not* have provided motivation to lower the pivot points on KR996/Bares, as proposed. *See* PO Resp. 51–55; PO Sur-reply 23–24. For the reasons below, the complete record developed at trial supports Patent Owner's positions.

In the discussion summarized above, Petitioner relies on this passage from Beltrami as allegedly describing "the benefits of positioning the location of these pivot points low on the equipment include decreasing the frame requirements and lowering gravity center":

> Amongst the various advantages, the following ones are to be emphasized: the pivot points 24, 26 and 30 can be kept in such a low position on the vehicle that no supporting frame is needed; the arm can be lifted with nearly constant power input and speed; and finally a lifting can be performed without having the equipment gravity center to undergo an unnecessarily large shifting.

Ex. 1008, 3:35–41, *cited at* Pet. 69. Patent Owner responds that one of ordinary skill in the art would not have interpreted the passage at issue as generally discussing the benefits of positioning pivot points low on a compact utility loader, but rather, as discussing the benefits of going from the prior art radial-lift linkage (as shown in Beltrami, Figure 1) to a vertical-lift linkage (as shown in Beltrami, Figure 2), both reproduced below:

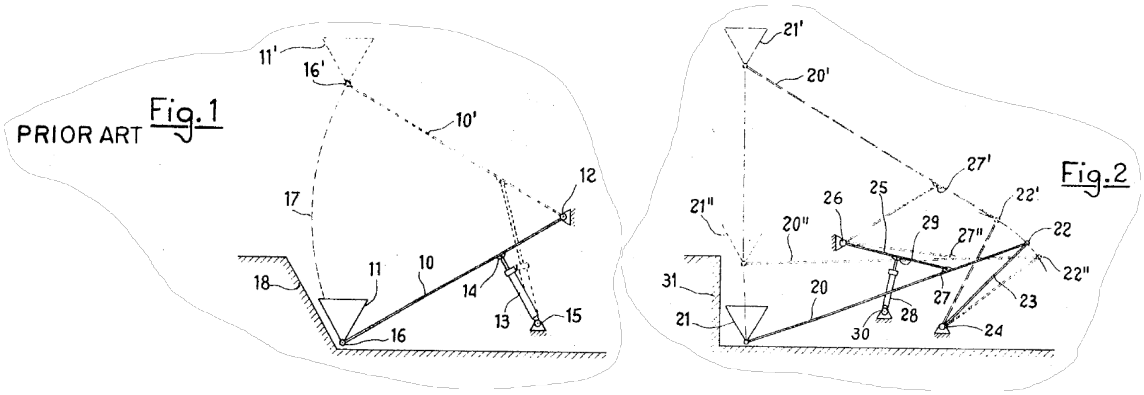

PO Resp. 51–52 (reproducing Ex. 1008, Figs. 1 & 2). Beltrami describes Figure 1 as "diagrammatically show[ing] the conventional means by which the motions of a bucket can be controlled" and describes Figure 2 as "diagrammatically show[ing] the means according to the invention by which the motions of a bucket are controlled." Ex. 1008, 2:24–27. Having considered Beltrami and the evidence of record, including declaration testimony, we agree with Patent Owner's interpretation of the passage at issue, which is a primary basis for Petitioner's reliance on Beltrami.

As noted by Patent Owner, Beltrami leads up to the passage at issue by discussing the benefits of its vertical-lift linkage (in Figure 2) over the "PRIOR ART" radial-lift linkage (in Figure 1). *See* PO Resp. 52 (citing Ex. 1008, 2:41–3:45; Fleming Decl. ¶¶ 118). For example, Beltrami describes a number of drawbacks of the prior art radial-lift designs: (1) inability to create vertical soil walls (known as escarpments), (2) the need to have pivot point 12 (in Figure 1) at an "inconveniently high level in order to allow the bucket 11 to be raised to a sufficient height for a convenient dumping," and (3) the "marked instability of the equipment" due to the "shiftings of the equipment gravity center in respect to a vertical plane." Ex. 1008, 2:41–3:7. Beltrami then discloses that the "above drawbacks are

wholly prevented or at least reduced by" the vertical-lift linkage, such as the ability to create a soil escarpment "very close to a vertical plane" and the ability to dump material at sufficient height even with a relatively short arm 20. *Id.* at 3:8–34. This discussion brings us to the passage at issue.

With that background, we agree with Patent Owner's and Dr. Fleming's interpretation of the passage at issue. *See* Fleming Decl. ¶¶ 118–124; PO Resp. 52–55. First, we agree with Dr. Fleming that one of ordinary skill in the art would have understood the statement that "pivot points 24, 26 and 30 can be kept in such a low position on the vehicle that no supporting frame is needed" (Ex. 1008, 3:36–38) in the passage at issue as highlighting one of the *previously discussed* benefits of vertical-lift linkages over radial-lift linkages—i.e., avoiding "inconveniently high" pivot points and thus unnecessary frame structure for the same dumping height. *See* Fleming Decl. ¶ 120, *discussed at* PO Resp. 53–54. Thus, the stated benefit—"no supporting frame"—is present *only* in the context of comparing the vertical-lift-linkage configuration to the prior art radial-lift-linkage configuration. Counsel for Petitioner confirmed this at the hearing. Tr. 24:24–25:11 (discussing how "Beltrami is going from a radial lift loader to a vertical lift loader" and how this portion of the passage at issue is referring to how, "in a radial lift machine, you would often have supporting frames to support that higher pivot point, and he's saying it would be kept in the lower. I don't believe it's any more than that"). And, as argued by Patent Owner, the record does not support Dr. Velinsky's understanding of this portion of the passage at issue as teaching decreased frame structure requirements as a *more general* benefit of lowering the pivot points on *any* utility loader. *See*

PO Resp. 52–54 (discussing Velinsky Pet. Decl. ¶ 168); Fleming Decl. ¶ 119 (same).

Second, we agree with Patent Owner and Dr. Fleming that one of ordinary skill in the art would have understood the statement that "lifting can be performed without having the equipment gravity center to undergo an unnecessarily large shifting" (Ex. 1008, 3:39–41) in the passage at issue as again highlighting one of the *previously discussed* benefits of a vertical-lift linkage over radial-lift linkages—i.e., avoiding the "marked instability of the equipment" due to the "shiftings of the equipment gravity center *in respect to a vertical plane*" (*id.* at 2:69–75 (emphasis added)). *See* Fleming Decl. ¶¶ 122–123, *discussed at* PO Resp. 54–55. The phrase "in respect to a vertical plane" supports Dr. Fleming's position that one of ordinary skill in the art would have understood the statement in the passage at issue as addressing "the *forward and aft* shifting of the center of gravity that a radial lift machine experiences when it lifts a load" and that load travels in an arcuate path *away from* the center of gravity, thereby posing a tipping risk. Fleming Decl. ¶¶ 122–123; PO Resp. 54.

As noted by Patent Owner and Dr. Fleming, Beltrami discusses how a vertical-lift linkage helps reduce this risk in that the load does not travel in an arcuate path and thereby remains closer in the horizontal direction to the center of gravity. Fleming Decl. ¶ 123, *discussing* Ex. 1008, 5:50–53 ("With the considered grabbing bucket it is particularly important to have a bucket path with a lowermost position very close to [the] tractor and an uppermost position as far as possible therefrom."); PO Resp. 54 ("Beltrami explains that transitioning to a vertical lift path avoids the forward center of gravity shift, thereby decreasing the risk of tipping."). Further, as argued by

Patent Owner, the record does not support Dr. Velinsky's understanding of this portion of the passage at issue as allegedly teaching a *lowered* center of gravity as a *more general* benefit of lowering the pivot points on *any* utility loader. *See* Velinsky Pet. Decl. ¶¶ 168–169, *discussed at* PO Resp. 54. Or, as stated succinctly by Dr. Fleming, "Beltrami's discussion of the shifting center of gravity is *forward and aft*, not *up and down* as Dr. Velinsky suggests." Fleming Decl. ¶ 123 (emphasis added); PO Resp. 55 (same).

In the Reply, Petitioner contends that Patent Owner improperly attempts to limit Beltrami to the "specific problem it addresses" rather than allowing the teachings to be "available for all they fairly disclose to" one of ordinary skill in the art. *See* Pet. Reply 24–25 (citing *In re Kahn*, 441 F.3d 977, 987 (Fed. Cir. 2006); *Cross Med. Prods., Inc. v. Medtronic Sofamor Danek, Inc.*, 424 F.3d 1293, 1323 (Fed. Cir. 2005)). Although a "reference must be considered for everything it *teaches* by way of technology and is not limited to the particular *invention* it is describing and attempting to protect" (*Belden Inc. v. Berk-Tek LLC*, 805 F.3d 1064, 1076 (Fed. Cir. 2015)), a reference still must teach or suggest the aspects for which it is relied on. *See* PO Sur-reply 23 (addressing this argument by Petitioner, stating that Petitioner "provides no basis for the Board to conclude that Beltrami 'fairly discloses' moving the pivot points connecting the linkages and actuator *as low as possible* on the mainframe or to positions different than Beltrami discloses"). Here, for the reasons discussed above, one of ordinary skill in the art would *not* have considered Beltrami as *generally* teaching the benefits of lowering pivot points in utility loaders, for which it is relied on by Petitioner. *See, e.g.*, Pet. 68 (stating that one of ordinary skill in the art "would have been motivated to combine the teachings of Beltrami including

locating the pivot point attachment of intermediary parts **low** on the mainframe . . . to produce a predictable and beneficial loader configuration" (citing Velinsky Pet. Decl. ¶¶ 167–170)); *see also* PO Sur-reply 23–24 ("Beltrami simply does not contain the teachings that [Petitioner] asks the Board to attribute to it. The portion of Beltrami relied on by [Petitioner] (3:35–38) is plainly describing 'the various advantages' over the prior art radial-lift machine depicted in Figure 1.").

For the reasons above, the record supports Patent Owner's and Dr. Fleming's position that—because KR996 *already teaches* a vertical-lift linkage[24]—one of ordinary skill in the art would not have been motivated by the passage at issue to lower the pivot points in KR996/Bares (as asserted by Petitioner) in that the passage at issue relates to the benefits of a vertical-lift linkage over radial-lift linkages. *See* PO Resp. 52 (first full paragraph) (citing Fleming Decl. ¶ 118), 53–54 ("Because KR996 does not rely on a radial-lift loader arm mechanism and does not, therefore, incorporate an extended supporting frame at an 'inconveniently high level,' Beltrami provides instructions to do away with a structure *that already does not exist on the KR996 device*." (citing Fleming Decl. ¶ 122)). We determine, in light of the complete record, that Petitioner has not shown by a preponderance of the evidence that one of ordinary skill in the art at the time of the invention would have had reason to lower the pivot points in KR996/Bares based on Beltrami, as proposed.

---

[24] Petitioner acknowledges that KR996 discloses a vertical-lift linkage. Pet. Reply 22 ("There is no genuine dispute that both Beltrami and KR996, like the [challenged] patent, disclose vertical-lift loaders utilizing a four-bar mechanism.").

Moreover, even if Beltrami *did* provide sufficient motivation for "locating the pivot point attachment of intermediary parts **low** on the mainframe" as proposed (Pet. 68), as an additional basis for the outcome as to this ground, we determine that Petitioner has not adequately explained how one of ordinary skill in the art would have arrived at (1) the *four specific relative requirements* in the "vertical distance" limitation recited in limitations 14.6c or (2) the *three specific relative requirements* in the "vertical distance" limitations recited in limitations 19.10 and 25.8. *See* PO Sur-reply 26–27 ("Further, even if [one of ordinary skill in the art] was motivated by Beltrami to reconfigure the loader arm mechanism of KR996, [Petitioner] has not demonstrated that this would have yielded a machine having the *precise vertical distances* required by claims 14–16 and 19–27." (emphasis added)).

As an initial matter, Petitioner first relies on "simple inspection" as to two of the four specific relative requirements in the "vertical distance" limitations: (1) "the vertical distance between the rotational axis R and the first pivot point being less than 1.5 times D1" and (2) "the vertical distance between the rotational axis R and the fifth pivot point also being less than 1.5 times D1." Pet. 81 (stating that the "*first pivot point* and the *fifth pivot point* appear by simple inspection to be within the recited dimension"). But patent drawings not designated as drawn to scale should not generally be relied on for measurements or precise proportions of depicted elements if the specification is silent on the issue. *See Hockerson-Halberstadt, Inc. v. Avia Grp. Int'l, Inc.*, 222 F.3d 951, 956 (Fed. Cir. 2000). And Petitioner acknowledged in its own briefing that patent drawings not to scale should not be relied on for dimensions. *See* Pet. Reply 3–5, 20–21, 25–26.

Petitioner also argues that one of ordinary skill in the art would have arrived at the four specific relative requirements in the "vertical distance" limitations based on routine optimization of alleged result-effective variables. *See, e.g.*, Pet. 69 (arguing that one of ordinary skill in the art "would have recognized that a design of a vehicle such as KR996's includes determining pivot point locations, because it was well-known that pivot point locations are result-affecting design variables for desired performance, as explained by Beltrami").

"[W]here the general conditions of a claim are disclosed in the prior art, it is not inventive to discover the optimum or workable ranges by routine experimentation." *In re Aller*, 220 F.2d 454, 456 (CCPA 1955). A given parameter, however, must first be recognized as a result-effective variable (i.e., a variable which achieves a recognized result) before the determination of the optimum ranges of that variable can be characterized as routine experimentation. *In re Antonie*, 559 F.2d 618, 620 (CCPA 1977) ("The PTO and the minority appear to argue that it would always be obvious for one of ordinary skill in the art to try varying every parameter of a system in order to optimize the effectiveness of the system *even if there is no evidence in the record that the prior art recognized that particular parameter affected the result*." (emphasis added)); *In re Applied Materials, Inc.*, 692 F.3d 1289, 1295 (Fed. Cir. 2012) (discussing how the general rule from *In re Aller*, 220 F.2d at 456, "is limited to cases in which the optimized variable is a 'result-effective variable[]' *In re Antonie*, 559 F.2d 618, 620 (CCPA 1977)").

The complete record developed at trial does not show that the prior art recognized as result-effective variables *any* of the *specific* ratios of dimensions in the four recited requirements in the "vertical distance"

limitations here. Petitioner makes several attempts to address this issue (*see* Pet. 68–87), but we find none sufficient to carry Petitioner's burden.

First, Petitioner states that "the locations of the pivot point connections between the linkages and the mainframe are result-affecting variables that can be selected based on desired performance." Pet. 68–69 (citing Ex. 1008, 4:35–50, 5:61–67). The cited passages from Beltrami support that *the locations* of the pivot points (in general) dictate the path of the tool or bucket on the loader, but Beltrami does not mention—let alone recognize as result-effective variables—*any* of the four recited *ratios of dimensions* in the "vertical distance" limitations.

Second, Petitioner frequently highlights Beltrami's alleged general teachings of the "benefits to providing the pivot point attachment locations **low** on the frame of the vehicle" as the basis to arrive at the four recited requirements at issue. Pet. 82; *see also* Pet. 84 (arguing that "Beltrami explicitly recognizes advantages of a lower center of gravity and a reduction in frame" (citing Ex. 1008, 3:35–41, 2:69–75), 85 (discussing how one of ordinary skill in the art "would have had the skillset, desire, and motivation to provide the pivot points low (*i.e.*, minimizing vertical distance between the pivot points and the rotational axis) to provide, for example, a compact size mainframe and a low center of gravity of the carrier as taught by Beltrami by lowering the attachment pivot points of the links and boom cylinder in the context of KR996-Bares").

As an initial matter, for the reasons discussed above, the complete record does not support Petitioner's view of how one of ordinary skill in the art would have understood the relevant teachings of Beltrami. As also discussed above, Beltrami does not recognize as result-effective variables

any of the four recited ratios of dimensions in the "vertical distance" limitations. Moreover, Petitioner has not adequately explained why one of ordinary skill in the art seeking to keep the pivot points "relatively low" (Pet. 84) would necessarily adjust the *specific* ratios of dimensions recited to arrive at the four recited ratios of dimensions in the "vertical distance" limitations. *See In re Stepan Co.*, 868 F.3d 1342, 1346 (Fed. Cir. 2017) (reversing a rejection based on routine optimization because the rejection failed to explain why it would have been routine optimization to arrive at the claimed invention).

On this issue, Petitioner also argues that "it would have been obvious to position the pivot points as claimed: vertical distances *less than 1.5 times D1* and the forward-most pivot point *less than 0.75 D5*" because the challenged patent "provides **no** specific advantage, benefit, or surprising result to any one of the myriads of claimed relative dimensions related to these pivot points including those of Claim 14." Pet. 84.

In the context of a ground based on discovering the optimum or workable ranges of a result-effective variable, the criticality of a claimed range can be relevant to patentability. *See, e.g.*, *In re Applied Materials, Inc.*, 692 F.3d at 1297 ("The outcome of optimizing a result-effective variable may still be patentable if the claimed ranges are critical and produce a new and unexpected result which is different in kind and not merely in degree from the results of the prior art." (internal quotation marks omitted)). A showing of "criticality," however, comes as one potential rebuttal to a prima facie case of obviousness. *See In re Stepan Co.*, 868 F.3d at 1348. Here, as discussed above, Petitioner has not carried its initial burden of establishing obviousness as to the "vertical distance" limitations based on

routine optimization. For this additional reason, even if Beltrami did provide sufficient motivation for the proposed modification, we find, based on the complete record, that Petitioner has not demonstrated by a preponderance of the evidence that one of ordinary skill in the art would have arrived at the "vertical distance" limitations based on routine optimization of result-effective variables.

b. Conclusion as to Claims 14, 19, and 25

For the reasons above, we determine, based on the complete record, that Petitioner has not demonstrated by a preponderance of the evidence that claims 14, 19, and 25 would have been obvious based on KR996, Bares, and Beltrami.

4. Claims 15, 16, 20–24, 26, and 27

For dependent claims 15 and 16 (which depend from claim 14), dependent claims 20–24 (which depend from claim 19), and dependent claims 26 and 27 (which depend from claim 25), Petitioner contends that the proposed combination of KR996, Bares, and Beltrami satisfies each limitation. Pet. 88, 95–98, 103; Pet. Reply 16–27. As discussed in the prior section, Petitioner has not demonstrated by a preponderance of the evidence that independent claims 14, 19, and 25 would have been obvious based on KR996, Bares, and Beltrami. *See* § II.H.3. Thus, we determine, based on the complete record, that Petitioner has not demonstrated by a preponderance of the evidence that claims 15, 16, 20–24, 26, and 27 would have been obvious based on KR996, Bares, and Beltrami.

III. CONCLUSION

Upon consideration of the briefing and the evidence of record, we determine that Petitioner (1) has proven, by a preponderance of the evidence,

that claims 1–7, 10–13, and 28 are anticipated by KR996 and would have been obvious based on KR996, (2) has proven, by a preponderance of the evidence, that claims 8 and 9 would have been obvious based on KR996 and Bares, and (3) has not proven, by a preponderance of the evidence, that claims 14–16 and 19–27 would have been obvious based on KR996, Bares, and Beltrami.[25]

[25] Should Patent Owner wish to pursue amendment of the challenged claims in a reissue or reexamination proceeding subsequent to the issuance of this decision, we draw Patent Owner's attention to the April 2019 Notice Regarding Options for Amendments by Patent Owner Through Reissue or Reexamination During a Pending AIA Trial Proceeding, 84 Fed. Reg. 16,654 (Apr. 22, 2019). If Patent Owner chooses to file a reissue application or a request for reexamination of the challenged patent, we remind Patent Owner of its continuing obligation to notify the Board of any such related matters in updated mandatory notices. *See* 37 C.F.R. §§ 42.8(a)(3), (b)(2).

In summary:

Claim(s)	35 U.S.C. §	Reference(s)/ Basis	Claim(s) Shown Unpatentable	Claim(s) Not Shown Unpatentable
1–7, 10–13, 28	102(a)(1)	KR996	1–7, 10–13, 28	
1–7, 10–13, 28	103	KR996	1–7, 10–13, 28	
8, 9	103	KR996, Bares	8, 9	
14–16, 19–27	103	KR996, Bares, Beltrami		14–16, 19–27
Overall Outcome			1–13, 28	14–16, 19–27

IV. ORDER

For the reasons above, it is:

ORDERED that Petitioner has proven, by a preponderance of the evidence, that claims 1–13 and 28 are unpatentable;

FURTHER ORDERED that Petitioner has not proven, by a preponderance of the evidence, that claims 14–16 and 19–27 are unpatentable;

FURTHER ORDERED that the parties shall file, within 10 days of entry of this Decision, a joint motion to seal this Decision, and shall provide,

along with the joint motion, an exhibit with a proposed redacted public version of this Decision;

FURTHER ORDERED that Petitioner's Motion to Exclude is *granted in part*;

FURTHER ORDERED that Patent Owner's Motion to Exclude is *denied*; and

FURTHER ORDERED that, because this is a Final Written Decision, parties to the proceeding seeking judicial review of the decision must comply with the notice and service requirements of 37 C.F.R. § 90.2.

FOR PETITIONER:

David O'Dell
Kelly Gehrke Lyle
Hong Shi
Greg Michelson
John Russell Emerson
HAYNES AND BOONE LLP
david.odell.ipr@haynesboone.com
kelly.lyle.ipr@haynesboone.com
hong.shi.ipr@haynesboone.com
greg.michelson.ipr@haynesboone.com
russ.emerson.ipr@haynesboone.com

FOR PATENT OWNER:

Richard L. Brophy
Marc Vander Tuig
Michael J. Vander Molen
ARMSTRONG TEASDALE LLP
rbrophy@atllp.com
mvandertuig@atllp.com
mvandermolen@atllp.com
iplitstaff@atllp.com