Trials@uspto.gov
571-272-7822

Paper 31
Date: April 16, 2026

UNITED STATES PATENT AND TRADEMARK OFFICE

BEFORE THE PATENT TRIAL AND APPEAL BOARD

APPLE INC.,
Petitioner,

v.

DH INTERNATIONAL LTD.,
Patent Owner.

IPR2025-00172
Patent 9,022,294 B2

Before KARL D. EASTHOM, BRIAN P. MURPHY, and MARY C. HOFFMAN, *Administrative Patent Judges.*

MURPHY, *Administrative Patent Judge.*

FINAL WRITTEN DECISION

Determining All Challenged Claims Unpatentable
35 U.S.C. § 318(a)

Denying Patent Owner's Motion to Exclude
37 C.F.R. § 42.6(c)

I. INTRODUCTION

A. Background and Summary

Apple Inc. ("Petitioner") filed a Petition pursuant to 35 U.S.C. § 311 requesting institution of *inter partes* review of claims 1–20 of U.S. Patent No. 9,022,294 B2 (Ex. 1001, "the '294 patent"). Paper 1 ("Pet."). DH International ("Patent Owner") timely filed a Patent Owner Preliminary Response. Paper 6 ("Prelim. Resp."). On June 25, 2025, we instituted *inter partes* review of claims 1–20 pursuant to 35 U.S.C. § 314 based on the challenges set forth in the Petition. Paper 8.

Subsequent to institution, Patent Owner filed a Response. Paper 15 ("Resp."). Petitioner filed a Reply, and Patent Owner filed a Sur-Reply. Paper 18 ("Reply"); Paper 20 ("Sur-Reply"). Patent Owner also filed a Motion to Exclude Petitioner's Petition (Paper 1), Reply (Paper 18), Expert Declaration (Exhibit 1004), Japanese Patent No. 2003110751 ("Suga") (Exhibits 1005 and Exhibit 1017), Expert Reply Declaration (Exhibit 1021), and Exhibit 1022 (McGraw-Hill Telecom Dictionary). Paper 24, 1 ("Motion" or "Mot."). Petitioner filed an Opposition to Patent Owner's Motion, and Patent Owner filed a Reply. Paper 25 ("Mot. Opp."); Paper 27 ("Mot. Reply").

We have jurisdiction under 35 U.S.C. § 6. This is a Final Written Decision under 35 U.S.C. § 318(a) as to the patentability of claims 1–20 of the '294 patent. We conclude Petitioner has demonstrated by a preponderance of the evidence that claims 1–20 of the '294 patent are unpatentable.

B. Real Parties in Interest and Related Matters

Petitioner, Apple Inc., identifies itself as the real party in interest. Pet. 80. Patent Owner, DH International Ltd., identifies itself as the real party in interest. Paper 3, 2.

Petitioner and Patent Owner identify the following related matters:

- *DH International Ltd v. Apple Inc.*, No. 1:23-cv-01114 (W.D. Tex.), transferred to Northern District of California (3:24-cv-06185)
- *DH International Ltd v. Google LLC*, No. 1:23-cv-01116 (W.D. Tex.), (dismissed)
- *Google LLC v. DH International Ltd.*, IPR2024-01322 (PTAB)
- *Samsung Electronics Co., Ltd. v. G. Holdings, Ltd*, IPR2021-00884 (PTAB) (terminated pre-institution pursuant to settlement)
- *Google LLC v. DH International Ltd.*, IPR2024-01321 (PTAB) (challenging related U.S. Patent No. 7,628,333 ("the '333 patent"))
- *Samsung Electronics Co., Ltd. v. G. Holdings, Ltd*, IPR2021-00885 (PTAB) (challenging the '333 patent) (terminated pre-institution pursuant to settlement)
- *G. Holdings Ltd. v. Samsung Electronics Co., Ltd.*, No. 2:20-cv- 00342 (E.D. Tex.) (dismissed).
- *Apple Inc. v. DH International Ltd.*, IPR2025-00173 (challenging the 333 patent).

Pet. 80; Paper 3, 2.

Patent Owner further identifies the '294 patent as issuing from a continuation-in-part application claiming priority to the '333 patent. Prelim. Resp. 1.

C. The '294 Patent

The'294 patent is directed to a portable electronic device, particularly a cellular phone ("cell phone"), that exchanges data with other devices by

switching between alternate data conveyance operations. Ex. 1001, 9:28–49, 13:12–21, 13:25–32. The cell phone includes a "*data conveyance switching element*" that switches between a "*first state*" and a "*second state*" in response to whether or not an "*activation cue*" is received by the cell phone. *Id.* at 9:28–41, 13:50–58. For example, if a cell phone receives an activation cue from a nearby debit machine, receipt of the activation cue sets the switching element to the first state. *Id.* at 13:55–58 (switching element in "a first state when portable electronic device 102 has received the activation cue"), 15:4–6 ("If an activation cue is received . . . the switching element . . . will be assigned its first state.").[1] The cell phone user can then trigger a data exchange with the debit machine over a "*first communication link*." *Id.* at 9:1–6 ("communication link can be established"); 11:19–27 (debit machine transaction), 13:33–36 ("direct link"). If the cell phone does not receive an activation cue, the switching element is in the second state (default state) and the cell phone user can trigger a data exchange with another device, e.g., a remote cell phone, over a "*second communication link*" (e.g., a network). *Id.* at 9:42–49, 13:36–41, 13:55–58, 15:8–13, 15:24–28, 16:47–57.

Figure 4 in the '294 patent is exemplary and reproduced below:

[1] Quotations from patent documents may omit or de-emphasize bold numerals.

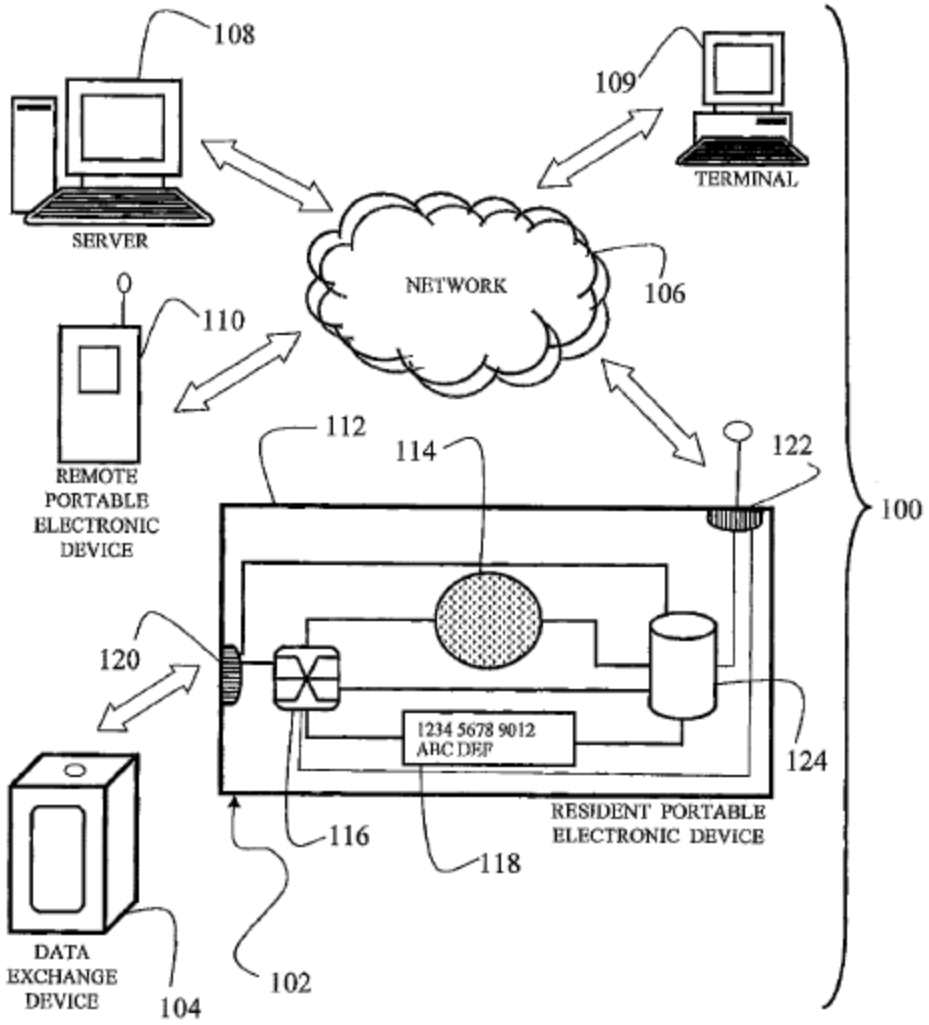

Fig. 4

Ex. 1001, 7:26–32, 13:25–32, Fig. 4. Figure 4 depicts data exchange system 100 that includes portable electronic device 102, e.g., a cell phone. *Id.* at 13:47–49 ("device 102 may be for example a cellular phone"). The cell phone can communicate data through a first communication link with first external data exchange device 104, e.g., a debit machine emitting an activation cue, or through a second communication link (network 106) with remote devices 108–110. *Id.* at 13:25–49, 15:3–28; *see also id.* at 11:10–27 ("[The][d]ebit machine would continuously, or at regular time intervals, or

when prompted to do so, emit an activation cue"), 14:48–50 ("device 110 . . . may be for example a cellular phone").

The "activation cue is in the form of a data communication of a specific type which will be recognized by electronic device [102] as an activation cue, for example a predetermined bit sequence." *Id.* at 9:24–27. An activation cue may be "either a continuously emitted activation cue which is readable within a determined physical distance from data exchange device 104, a pulse cue which is emitted at determined time intervals or a punctual cue which is selectively emitted one or more times [under] certain circumstances." *Id.* at 14:65–15:3. The switching element in electronic circuit 116 "can be any type of device allowing data to be conveyed according to alternate data conveyance operations in response to an activation cue being received by transceiver 18 or not." *Id.* at 9:28–31. Where electronic circuit 116 is a microchip, for example, the "switching element can be a series of instructions programmed onto the microchip whereby the data conveyance operation will be automatically executed according to whether or not an activation cue was received by" a transceiver on the cell phone. *Id.* at 9:33–38.

In operation, the cell phone user must selectively trigger control device 114, e.g. press a button on the cell phone, to issue an "*invariable activation command*" and initiate an exchange of data. *Id.* at 10:37–51 ("when control device is triggered, . . . an invariable activation command" is issued); 15:14–18 ("accomplished by entering a PIN code, pressing an authorization button"), 16:26–28 ("user must authorize the transaction by using control device 114, which may include entering a PIN code"), 17:1–3 (same). Selectively triggering the control device will initiate a data exchange with one of the external data exchange devices according to the

state of the switching element. *Id.* at 14:53–59, 15:3–28. If the cell phone has received an activation cue, the switching element in electronic circuit 116 is in a "*first state*" and will convey data to first data transceiver 120 for initiating a data exchange with first external data exchange device 104 over a first communication link (e.g., a direct link). *Id.* at 15:19–23, 15:55–63, 16:11–15. If the cell phone has not received an activation cue, the switching element in electronic circuit 116 is in a "*second state*" and will convey data to second data transceiver 122 for initiating a data exchange with second external data exchange device 108, 109, or 110 over a second communication link (e.g., network 106). *Id.* at 15:24–28, 15:54–16:2, 17:3–17.

D. Illustrative Claim

Petitioner challenges all claims 1–20 of the '294 patent. Claims 1, 10–12, and 19 are the independent claims. Claims 2–9 depend, directly or indirectly, from claim 1. Claims 13–18 depend, directly or indirectly, from claim 12. Claim 20 depends from claim 19. Claim 1, reproduced below with Petitioner's bracketed identifiers, illustrates the claimed subject matter:

> [1(Pre)] A cellular phone, comprising:
>
> [1(a)] an electronic circuit *capable of storing data* therein, capable of processing data, and capable of data input and output;
>
> [1(b)] a user-triggered control device operatively linked to said electronic circuit, said user-triggered control device configured to be operated by a user via one of a button, a keypad, a tactile screen, and a biometric parameter detector, and after being operated issue *an invariable activation command*, with said invariable activation command being issued when said control device is selectively triggered by the user;
>
> [1(c)] a first data transceiver operatively linked to said electronic circuit, said first data transceiver being for exchanging data

> between said electronic circuit and a first external data exchange device over a first communication link;
>
> [1(d)] a second data transceiver operatively linked to said electronic circuit, said second data transceiver being for exchanging data between said electronic circuit and a second external data exchange device over a second communication link that is distinct from said first communication link;
>
> [1(e)] *a cue receiver operatively linked to said electronic circuit for receiving an activation cue* from a source external to said cellular phone;
>
> [1(f)] *a data conveyance switching element operatively linked to said electronic circuit*, said switching element being assigned a first state upon an activation cue having been received by said cue receiver, and being assigned a second state when no activation cue was received by said cue receiver; and
>
> [1(g)] power means for providing power to said portable electronic device cellular phone;
>
> [1(h)(i)] wherein upon said control device being selectively triggered by the user to issue said invariable activation command: if said switching element is in said first state, a first data conveyance operation will be initiated through the instrumentality of said first data transceiver for sending data from said electronic circuit to the first external data exchange device over said first communication link; and
>
> [1(h)(ii)] if said switching element is in said second state, a second data conveyance operation will be initiated through the instrumentality of said second data transceiver for sending data from said electronic circuit to the second external data exchange device over said second communication link.

Ex. 1001, 18:64–19:44.

E. Prior Art and Asserted Grounds

Petitioner asserts claims 1–20 are unpatentable on the following grounds:

Claim(s) Challenged	35 U.S.C. §	Reference(s)/Basis
1–20	103(a)[2]	Suga,[3] Gorsuch[4]

Petitioner relies on the declarations of Michael Buehrer, Ph.D. (Ex. 1004; Ex. 1021). Patent Owner relies on the declaration of Mr. Safwan Zaheer (Ex. 2001).

II. ANALYSIS

A. Level of Ordinary Skill in the Art

Petitioner contends:

> A person of ordinary skill in the art at the time of the alleged invention of the '294 Patent ("POSITA") would have had a bachelor's degree in Electrical Engineering, Computer Engineering, or in a similar discipline with at least two years of experience with wireless communication devices and networks. More education can substitute for practical experience and vice versa.

Pet. 10 (citing Ex. 1004 ¶ 34). "Patent Owner agrees with the Petitioner on the level of ordinary skill in the art." Resp. 6 (citing Ex. 2001 ¶¶ 26–29). Mr. Zaheer testifies that a POSITA "would need to know how configurations for transmitting and receiving information between a portable

---

[2] The Leahy-Smith America Invents Act, Pub. L. No. 112-29, 125 Stat. 284 (2011) ("AIA"), includes revisions to 35 U.S.C. §§ 102 and 103 that became effective after the filing of the application that led to the challenged patent. Hence, this *inter partes* review is governed by the pre-AIA provisions of 35 U.S.C. §§ 102 and 103.

[3] Japan Patent Application No. 2003-110751 published April 11, 2003 to Suga ("*Suga*") (Ex. 1005; Ex. 1017). Exhibits 1005 and 1017 are identical except for the Translation Certification found on page 20 in each exhibit. We cite to Suga Ex. 1005 for convenience.

[4] WO 01/22662 A1 published March 29, 2001 to Gorsuch ("Gorsuch") (Ex. 1006).

device and terminal are created and implemented and how to access data on the portable device." Ex. 2001 ¶ 28.

In determining the level of ordinary skill in the art, various factors may be considered, including the "type of problems encountered in the art; prior art solutions to those problems; rapidity with which innovations are made; sophistication of the technology; and educational level of active workers in the field." *In re GPAC, Inc.*, 57 F.3d 1573, 1579 (Fed. Cir. 1995) (citing *Custom Accessories, Inc. v. Jeffrey-Allan Indus., Inc.*, 807 F.2d 955, 962 (Fed. Cir. 1986)). "These factors are not exhaustive but are merely a guide to determining the level of ordinary skill in the art." *Daiichi Sankyo Co. v. Apotex, Inc.*, 501 F.3d 1254, 1256 (Fed. Cir. 2007). There is uncontested evidence in the record before us that reflects the knowledge and experience of a POSITA.

We adopt the parties' agreed level of ordinary skill in the art, which is consistent with the description in the '294 patent and the prior art of record.

B. Claim Construction

In this *inter partes* review, we apply the same claim construction standard that would be used in a civil action under 35 U.S.C. § 282(b). 37 C.F.R. § 42.100(b). In applying this standard, we generally give claim terms their ordinary and customary meaning as would be understood by a POSITA at the time of the invention and in the context of the entire patent disclosure. *See id.*; *Phillips v. AWH Corp.*, 415 F.3d 1303, 1312–14 (Fed. Cir. 2005) (en banc). When construing a disputed claim limitation, "we look principally to the intrinsic evidence of record, examining the claim language itself, the written description, and the prosecution history, if in evidence." *DePuy Spine, Inc. v. Medtronic Sofamor Danek, Inc.*, 469 F.3d 1005, 1014 (Fed. Cir. 2006) (citing *Phillips*, 415 F.3d at 1312–17).

"Petitioner submits that all terms be given their plain and ordinary meaning consistent with the *Phillips* standard." Pet. 28 (citing *Phillips*, 415 F.3d at 1312 (*en banc*)). The Petition addresses the plain meaning of "*invariable activation command*" with reference to the '294 patent specification and prosecution history. *Id.* at 28–32. Patent Owner responds by offering constructions of the recited claim terms "*invariable activation command*," "*activation cue*," "*data conveyance switching element*," "*external data exchange device*,"[5] and "*close proximity*" of the first external data exchange device to the claimed cellular phone. Resp. 7–12. Petitioner replies and addresses Patent Owner's arguments construing "*invariable activation command*," "*activation cue*," and "*data conveyance switching element*." Reply 6–8.

We address the parties' claim construction arguments in the context of independent claim 1 and the '294 patent specification and prosecution history.

1. "invariable activation command"

Petitioner contends the recited "*invariable activation command*" is "a command to transmit data through either a first or second data conveyance operation, where the decision of which operation to use is outside of user control." Pet. 29. The Petition relies on the description of an invariable activation command in the '294 patent specification, including that

> ***the portable electronic device holder will not be able to select to issue different activation commands*** by means of control device 12 depending on whether the user considers that a data exchange operation should be accomplished with an external data exchange device 9, or whether the user wishes to display information on screen 16 on the basis of data stored in memory

[5] Construction includes the "*data exchange device*" recited in claim 11.

> 42. The same invariable activation command will thus be issued upon control device 12 being triggered, and ***it is the state of switching element*** 44b, resulting from the receipt or non-receipt of an activation cue by portable electronic device 10, ***that will be decisive as to the type of data conveyance that will occur***.

Id. at 30 (citing Ex. 1001, 10:29–51). The Petition further contends its proposed construction is supported by the '294 patent prosecution history where, the Petition asserts, "applicant stressed that the term 'invariable' means the control device cannot determine which data path is used." *Id.* at 31–32 (citing Ex. 1003, 124).

Patent Owner contends an "*invariable activation command*" is "an activation command issued by a control device in response to a user that relies on the state of the switching element to determine a data conveyance path. Once issued, the portable electronic device holder cannot select to issue different activation commands." Resp. 9 (citing Ex. 2001 ¶ 52). Patent Owner cites to the '294 patent specification description that a user selectively triggers the control device to issue an invariable activation command that initiates "one of two alternate data conveyance operations," *Id.* at 7–8 (citing Ex. 1001, 10:14–20, 10:26–29; Ex. 2001 ¶ 49). Patent Owner further cites a dictionary definition of "invariable" to mean "not changing or not capable of change." *Id.* at 9.

Both parties rely on the language of claim 1 and the '294 patent specification to support their respective constructions, which emphasize that a user's selective triggering of the control device does not issue different activation commands or control which data conveyance operation is used. Claim 1 recites an "*invariable activation command*" as a command that is "*issued when said control device is selectively triggered by the user*." Ex. 1001, 19:5–8. Thus, a user of the claimed cellular phone must selectively

trigger a control device "*via one of a button, a keypad, a tactile screen, and a biometric parameter detector*," e.g., by entering a PIN that is authenticated, in order for an invariable activation command to be issued. *Id.* at 8:43–50, 10:26–29, 19:3–5. The claimed function of an invariable activation command is to "*initiate*[]" either a "*first data conveyance operation*" or a "*second data conveyance operation*" depending on whether "*said switching element is in said first state*" or "*in said second state*." As explained above, the state of the switching element depends on whether or not an "*activation cue*" has been received by a "*cue receiver*." The '294 patent specification confirms the operation. *Id.* at 10:26–36, 15:14–28.

The parties joust over the proper terminology for characterizing an "*invariable*" activation command, but they agree on how the claimed cell phone and method work. The '294 patent specification makes clear that the activation command is "invariable" in the sense that whenever a user selectively triggers the control device on the cell phone, for example by pressing a button on a keypad, the same command issues to initiate a data conveyance operation regardless of the "state" of the "switching element" (i.e., whether in a "*first state*" or "*second state*"). The user cannot select or issue different activation commands. The selection of which of the two possible data conveyance operations will be initiated by selectively triggering the control device depends not on the activation command—it is the same—but on whether the switching element has received an activation cue ("*first state*") or not ("*second state*"). The '294 patent neatly summarizes that "[t]he same invariable activation command will thus be issued upon [the] control device being triggered, and it is the state of [the]

switching element . . . that will be decisive as to the type of data conveyance that will occur." *Id.* at 10:46–51.

Petitioner agrees that the Board's preliminary construction is consistent with Petitioner's explanation that "the command is 'invariable' in that "the decision of which link is used is independent of the command issued." Reply 6 (citing Pet. 32). Patent Owner does not argue otherwise. Resp. 7–9. Thus, we construe an "*invariable activation command*" as a command issued to initiate a data conveyance operation, such that the command itself is the same regardless of which data conveyance operation is initiated.

2. "activation cue"

Patent Owner argues that the recited "*activation cue*" "means a predetermined indicator, such as 'a predetermined bit sequence' (Exh. 1001, 6:1-3), that is 'recognized by the electronic device as an activation cue.'" Resp. 9. Patent Owner also contends a "POSITA would understand that the 'activation cue' must be <u>intended</u> as a predetermined indicator" and "has to be designed or created for use in a device to cause activation." *Id.* at 9 (citing Zaheer Decl. Ex. 2001 ¶ 53). Patent Owner emphasizes the non-limiting example described in the '294 patent where a "debit machine 9 would continuously, or at regular time intervals, or when prompted to do so, emit an activation cue in the form of a predetermined contactless data transmission." *Id.* at 9–10 (citing Ex. 1001, 11:19–22).

As explained in our Final Written Decision entered in IPR2024-01322, we disagree with Patent Owner's proposed construction. IPR2024-01322, Paper 33, 11–18 (PTAB Feb. 10, 2026).

The '294 claim language

We begin with the language recited in Limitation [1.e]: "*a cue receiver operatively linked to said electronic circuit for receiving* <u>*an activation cue*</u> *from a source* <u>*external*</u> *to said cellular phone*." Limitation [1.e] recites a cue receiver in functional terms, i.e., operatively linked to the electronic circuit in the cell phone for receiving an activation cue from a source external to the cell phone. Limitation [1.e] does not further limit the form or function of the activation cue. Dependent claim 3 recites a limitation where the first data transceiver on the cell phone "*includes a cue receiver*" for receiving the activation cue, but claim 3 does not limit the form or function of the activation cue.

Dependent claims 8 and 16 recite an embodiment "*where the cellular phone is conveyed toward a close proximity of the first* <u>*external*</u> *data exchange device and within range to* <u>*receive the activation cue*</u>." To underscore the point, the dependent claim language reinforces the requirement of a cell phone receiver (e.g., the "[t]ransceiver is also a cue receiver," Ex. 1001, 9:22) that receives an activation cue from a source external to the cell phone, such as an external data exchange device in close proximity. Ex. 1001, 13:33–36 ("proximity transaction wherein [the] devices [ ] are physically close to one another"), 14:65–67 ("a continuously emitted activation cue which is readable within a determined physical distance from [the] data exchange device"). Nothing in the language of Limitation [1.e], the corresponding limitation in the other independent claims, or the dependent claims requires that the activation cue received from an external source "must be <u>intended</u> as a predetermined indicator" as argued by Patent Owner. Resp. 9–10.

Limitation [1.f] defines the switching element and the function of the "*activation cue*" received by the cue receiver in Limitation [1.e]: "*a data conveyance switching element operatively linked to said electronic circuit, said switching element being* <u>*assigned a first state*</u> *upon* <u>*an activation cue*</u> *having been received by said cue receiver, and being assigned a second state when no activation cue was received by said cue receiver*." Receipt of an activation by the cue receiver causes the switching element in the cell phone to be assigned its first state. The cause-response function of the activation cue and switching element works as follows:

> If an activation cue is received by the portable electronic device 102 cue receiver, the switching element within electronic circuit 116 will be assigned its first state. *This means that if it is already in its first state, it will remain as such; while if it is in another state, it will be switched to its first state*. If no activation cue is received by the portable electronic device 102 cue receiver, the switching element within electronic circuit 116 will be assigned its second state. This means that if it is already in its second state, it will remain as such; while if it is in another state, it will be switched to its second state.

Ex. 1001, 15:4–13 (emphases added). Limitation [1.f], and the corresponding limitation in the other independent claims, recites a cause-response function that defines the interaction of the cue receiver and the switching element—receipt of an activation cue from an external source assigns the switching element to a first "activated" state. *Id.* at 9:45–46, 10:14–16, 13:55–60. If no activation cue is received, the switching element is in its default second state. *Id.* at 9:47–48, 10:7–9, 13:55–60. Nothing in the language of Limitation [1.f], or the corresponding limitation in the other independent claims, limits the activation cue to a "predetermined indicator" as argued by Patent Owner. Resp. 9–10.

Limitation [1.h] recites the operative function of the cell phone when a user "*selectively trigger*[s] . . . *said invariable activation command*," e.g., by pushing a button or entering a PIN on the cell phone to initiate "*a first data conveyance operation . . . for sending data from said electronic circuit to the first data exchange device over said first communication link*." Assigning the switching element to a first (activated) state upon receipt of an "*activation cue*," as recited in Limitation [1.f], allows a cell phone user to initiate a first data exchange, for example a data exchange with a debit machine emitting an activation cue in close proximity to the cell phone. Nothing in the language of Limitation [1.h], or the corresponding limitation in the other independent claims, limits the "*activation cue*" to a predetermined indicator as argued by Patent Owner. Resp. 9–10.

The '294 patent specification and prosecution history

The '294 patent specification describes the "*activation cue*" in functional terms that mirror the claim language. The "activation cue is in the form of a data communication of a specific type which will be recognized by electronic device 10 as an activation cue, for example a predetermined bit sequence." Ex. 1001, 9:24–27. Petitioner cites the quoted description of the claimed "*activation cue*" in support of its argument that the '294 patent specification "does not require that an activation cue be predetermined." Reply 7–8 (citing Ex. 1001, 9:24–27). We agree with Petitioner.

The claim language and specification define and describe an "*activation cue*" in functional terms: a data communication from an external source is received by the cell phone and recognized as an activation cue if it causes the switching element to be assigned its first (activated) state. Ex. 1001, 9:28–31, 9:42–46, 10:14–16, 13:55–60, 14:53–59, 15:4–6, 19:20–26.

The activation cue may be a predetermined bit sequence, a predetermined contactless data transmission, continuously emitted, pulsed, or punctual, but these are *unclaimed* non-limiting embodiments of the preferred form of data transmission. *Id.* at 9:25–26 ("for example a predetermined bit sequence"), 11:20–22 ("One example . . . emit an activation cue in the form of a predetermined contactless data transmission"), 14:65–15:3 (continuously emitted, pulsed or punctual cue). We will not read such preferred embodiments from the specification into claim language that is not so limited. *See SuperGuide Corp. v. DirecTV Enterprises, Inc.*, 358 F.3d 870, 875 (Fed. Cir. 2004) (care should be taken "not to import into a claim limitations that are not part of the claim"); *see also In re Van Geuns*, 988 F.2d 1181, 1184 (Fed. Cir. 1993) ("limitations are not to be read into the claims from the specification"); *see also IQRIS Techns. LLC v. Point Blank Enterprises, Inc.*, 130 F.4th 998, 1004 (Fed. Cir. 2025) ("It is the claims, not the preferred embodiments, that define the metes and bounds of the patentee's invention.") (citing *Phillips*). We find that nothing in the claim language or intrinsic record limits the recited "*activation cue*" to a predetermined indicator as Patent Owner contends.

We agree with Petitioner that because neither the claims nor the specification recite or require an activation cue to be a predetermined indicator, "declining to adopt PO's additional language does not 'read out' any claimed element." Reply 7 (addressing argument at Resp. 9 n.5). The activation cue is "recognized" as such when a received data transmission from an external source assigns the switching element in the cell phone to a first (activated) state to allow a cell phone user to initiate a first data exchange. Activating the switching element allows a first data conveyance operation to be initiated with a first external data exchange device over a

first communication link when a user selectively triggers an invariable activation command by operating the cell phone. Ex. 1001, 9:24–27 ("recognized . . . as an activation cue"), 10:14–16 ("switching element . . . switches to its activated state"), 10:37–39 ("an invariable activation command"), 19:20–38 (claim 1). Nothing more is required of the activation cue. In short, we do not find a basis in the intrinsic record for requiring an "*activation cue*" to "mean[] a predetermined indicator, such as 'a predetermined bit sequence'" as argued by Patent Owner. Resp. 9 (citing Ex. 1001, 6:1–3; Ex. 2001 ¶ 53).

Extrinsic evidence

Mr. Zaheer's expert testimony, on which Patent Owner relies in support, cites to column 6 lines 1–3 of the '294 patent, which reads as follows:

> The invention also relates to a method for data conveyance with a portable electronic device of the type comprising: an electronic circuit capable of storing data therein, capable of processing data, and capable of data input and output . . . .

Ex. 2001 ¶ 53 (citing Ex. 1001, 6:1–3). The cited text from the '294 patent specification refers to Limitation [1.a] but does not support Mr. Zaheer's conclusory testimony that the "*activation cue*" recited in limitation [1.e] "means a predetermined indicator, such as 'a predetermined bit sequence.'" *Id.* We find Mr. Zaheer's testimony on this point to be conclusory and unpersuasive.

Patent Owner's further argument, that an "*activation cue*" is "[n]ot simply a message that is transmitted over a communication path" is also unavailing. Resp. 9 (citing Ex. 2001 ¶ 53). A claim construction that excludes a particular element is viewed as a negative limitation. *Ethicon LLC v. Intuitive Surgical, Inc.*, 847 Fed. App'x 901, 907 (Fed. Cir. Mar. 15,

2021). "[S]uch exclusions must find support either in 'the words of the claim' or through an 'express disclaimer or independent lexicography in the written description that would justify adding that negative limitation.'" *Id.* (citing *Omega Eng'g, Inc. v. Raytek Corp.*, 334 F.3d 1314, 1323 (Fed. Cir. 2003); *CCS Fitness, Inc. v. Brunswick Corp.*, 288 F.3d 1359, 1366–67 (Fed. Cir. 2002)). Patent Owner's argument amounts to reading a negative limitation—"not simply a message . . . transmitted over a communication path"—into the claims, without support in the '294 patent claim language, specification, or prosecution history. The '294 patent does not use lexicography, disavowal, or other language sufficient to limit the claimed "*activation cue*" to a predetermined indicator that would exclude a message transmitted over a communication path. *See GE Lighting Sols., LLC v. AgiLight, Inc.*, 750 F.3d 1304, 1309 (Fed. Cir. 2014) ("To act as its own lexicographer, a patentee must 'clearly set forth a definition of the disputed claim term,' and 'clearly express an intent to define the term.'") (citing *Thorner v. Sony Computer Entm't Am. LLC*, 669 F.3d 1362, 1365 (Fed. Cir. 2012)). "The standards for finding lexicography and disavowal are exacting," and those standards are not satisfied by Patent Owner in this case. *Id.*

In sum, we construe the claimed "*activation cue*" as a data communication received by a cellular phone from an external source and recognized by the cellular phone as an activation cue that causes the data conveyance switching element to be assigned its first (activated) state.

3. "data conveyance switching element"

Patent Owner asserts the "*data conveyance switching element*" "should be given its plain meaning, which is the switching of the data" because "[i]t is the data that is switched by the switching element between

data paths." Resp. 10 (citing Ex. 1001, Abstract (code 57), 9:28–31; Ex. 2001 ¶ 54). Patent Owner further contends that "[s]tates are not switched by the 'data conveyance switching element['']; rather, states are assigned to what the switch is conveying." *Id.* Patent Owner acknowledges, however, that the '294 patent describes the switching element as "any type of device allowing data to be conveyed according to alternate data conveyance operations in response to an activation cue being received by transceiver 18 or not." *Id.* (citing Ex. 1001, 9:28–31; Ex. 2001 ¶ 54).

Petitioner observes that Patent Owner's argument is identical to the argument Patent Owner made in its Preliminary Response, without addressing the Board's preliminary reasoning in the Institution Decision. Reply 8. The '294 patent describes the claimed data conveyance method as follows:

> In this method for data exchange, data will be conveyed to either one of the first and second data transceivers 120, 122 depending on the whether the switching element comprised within electronic circuit 116 is in a first state or a second state, respectively.

Ex. 1001, 14:55–59. The '294 patent also refers consistently to the switching element in the context of switching between an activated state ("*first state*") or inactive state ("*second state*") for executing "alternate data conveyance operations," rather than "switching of the data" as contended by Patent Owner. *Id.* at Title (code 54) ("Portable Electronic Device and Method for Alternate Data Conveyance Operations"), 1:16–18 ("portable electronic device capable of alternate data conveyance operations"), 9:28–31 (see quote above), 10:28–29 ("one of two alternate data conveyance operations will be initiated"), 11:3–5 ("alternate data conveyance operations responsive[] to the reception or non-reception of an activation cue"), 13:53–

55 ("data forwarding switching element capable of alternate data conveyance operations responsive to reception or absence of an activation cue").

The '294 patent claims and specification make clear that the switching element switches between a "*first state*" and a "*second state*" depending on whether or not an activation cue is received. Ex. 1001, 9:28–41, 14:53–59. The state of the switch, in turn, "allow[s] data to be conveyed according to *alternate* data *conveyance* operations." *Id.* (emphasis added). Thus, the claim limitation is recited as a "*data conveyance switching element*" because the switching element allows the cell phone to switch between alternate operations for conveying data to either a first or second external data exchange device, depending on whether or not an activation cue has been received. *Id.* Patent Owner's proposed construction "conflicts with the express disclosure of the '294 Patent." *See Phillips*, 415 F.3d at 1315 (en banc) (The "specification 'is always highly relevant to the claim construction analysis. Usually, it is dispositive; it is the single best guide to the meaning of a disputed term.'") (citation omitted).

We determine that the '294 patent provides a clear, concise meaning for the switching element that Patent Owner acknowledge in its Response. Resp. 10. Patent Owner's acknowledgement is particularly telling because it is not consistent with Patent Owner's argument that the switching element means "switching of the data." *Id.* (citing Ex. 1001, 9:28–31). The claim language does not recite, and the specification does not describe, the switching element as a device that switches the data.

Therefore, we determine the claimed "*data conveyance switching element*" means any type of switching device that allows data to be conveyed according to alternate data conveyance operations in response to

whether or not an "*activation cue*" is received by the cell phone "*cue receiver*."

4. "[external] data exchange device]

Patent Owner argues that the recited "[*external*] *data exchange device*," "by its plain meaning, is a device or node on a network or a device that is directly linked without a network connection, which is consistent with the specification." Resp. 11 (citing Ex. 1001, 9:4–6, 12:62, 13:28, Figs. 1, 3, 4; Ex. 2001 ¶ 55). The cited passages in Patent Owner's Response are not consistent with such a plain meaning, particularly as applied by Patent Owner to the prior art in this proceeding. *Id.* Patent Owner even quotes the operative description of a data exchange device in the '294 patent as "any sort of data exchange device comprising an electronic circuit (not shown) therein and a data transceiver 9a." *Id.* (quoting Ex. 1001, 9:4–6). Patent Owner further represents that "[a]n external data exchange device is not a transceiver but a device with a transceiver." *Id.* (citing Ex. 2001 ¶ 55).

Beginning with the claim language, Limitations [1.c] and [1.d] recite "*a first* [*second*] *data transceiver operatively linked to said electronic circuit* [in the cell phone]," both of which are defined functionally as "*for exchanging data between said electronic circuit* [in the cell phone] *and a first* [*second*] *external data exchange device over a first* [*second*] *communication link*." Nothing in the language of Limitations [1.c] and [1.d], or the corresponding limitations in the other independent claims, further limits the form or function of the "[*external*] *data exchange device*," although a device external to the cell phone may invoke additional structure. We determine the plain meaning of "[*external*] *data exchange device*," as claimed and described in the '294 patent, governs: any [external] device that

comprises an electronic circuit and data transceiver for exchanging data with the electronic circuit in the cell phone over a communication link.

We also agree with Petitioner that Patent Owner's arguments distinguishing the asserted prior art references (discussed further below) rely on a much narrower construction of these terms. For example, when distinguishing Suga's data exchange system from Limitations [1.c] and [1.d], Patent Owner argues that a "'data exchange device' is the device identified as the data's end destination, not a network access point or network infrastructure that passes the data." Resp. 32. Regarding claim 13, Patent Owner similarly attempts to exclude "network infrastructure device[s] that simply route[] the data[.]" *Id.* at 55. Patent Owner attempts to support its narrowing construction by citing unclaimed, exemplary embodiments in the specification that describe data exchange devices as endpoints in a network "where data originates or terminates[.]" *Id.* As we observed above and at institution, non-limiting examples from the specification must not be read into the claims absent clear evidentiary support. *See SuperGuide Corp.*, 358 F.3d at 875.

We determine the plain meaning of "[*external*] *data exchange device*" as claimed and described in the '294 patent governs: any [external] device that comprises an electronic circuit and data transceiver for exchanging data with the electronic circuit in the cell phone over a communication link.

5. "close proximity"

Dependent claims 8 (depends from claim 1) and 16 (depends from claim 12) each recite the limitation "*where the cellular phone is conveyed toward a close proximity of the first external data exchange device and within a range to receive the activation cue to initiate the wireless data*

exchange." Patent Owner contends that "[c]lose proximity means within a several-meter range [or less]" and that "a POSITA would consider close proximity to be one meter or less." Resp. 11 (citing Ex. 1001, 9:8–11, 13:36–37, 15:55–57; Ex. 2001 ¶ 56). Patent Owner relies, in particular, on a non-limiting, exemplary embodiment described in the '294 patent as follows:

> In one embodiment portable electronic device 102 will communicate with data exchange device 104 through a direct link, for example in a proximity transaction wherein devices 102 and 104 are physically close to one another;

Ex. 1001, 13:33–36. Patent Owner reasons that in "all these examples, a person is physically close to the machines to view the interface and operate the machine," in order to read the recited "*close proximity*" as meaning one meter or less. Resp. 11.

We agree with Petitioner that Patent Owner has advanced alternative and inconsistent constructions for "*close proximity*." Reply 12 (citing Ex. 1020). Petitioner correctly notes that in a co-pending IPR proceeding with Google LLC, Patent Owner argued that "[c]lose proximity is within a several meter range" and "a POSITA would consider close proximity to be 10 meters or less," not one meter or less as argued here. *Id.* (quoting IPR2024-01322, Paper 17, 8 (PTAB, June 09, 2025)). We further agree with Petitioner that Patent Owner's proposed construction does not find support in the intrinsic record and that the "plain claim language specifies that 'close proximity' means 'within a range to receive the activation cue to initiate the wireless data exchange'." *Id.*

Although claims 8 and 16 also recite an embodiment where the cell phone's first data transceiver "*comprises a proximity transceiver for accomplishing a wireless data exchange . . . through a direct link*" with the

first external data exchange device, the claims define "*close proximity*" of the two devices in functional terms—"*within a range to receive the activation cue to initiate the wireless data exchange*"—not by limiting the physical distance between the devices. The cell phone and first external data exchange device must be close enough for the cell phone data transceiver to receive the activation cue and allow a user to initiate a wireless data exchange through a direct link with the first external data exchange device. We find that Patent Owner's proposed construction is unduly narrow because the cited descriptions are exemplary, not mandatory or restrictive, and do not limit "*close proximity*" to a range of several meters or one meter or less. *See SuperGuide*, 358 F.3d at 875 ("written description . . . is not a substitute for, nor can it be used to rewrite, the chosen claim language"); *Sisvel Int'l S.A. v. Sierra Wireless, Inc.*, 81 F.4th 1231, 1236–1237 (Fed. Cir. 2023) (finding patent owner's proposed construction "would improperly limit the claims to embodiments" described in the specification); *Cont'l Cirs. LLC v. Intel Corp.*, 915 F.3d 788, 797 (Fed. Cir. 2019) (disclosure of single embodiment, "without more," is not sufficient to disavow broader claim scope).

C. Asserted Obviousness of Claims 1–20 Over Suga, Gorsuch

Petitioner contends claims 1–20 of the '294 patent are obvious over Suga in view of Gorsuch. Pet. 32–76 (citing Ex. 1003 ¶¶ 77–154). The Petition asserts that Suga and Gorsuch disclose, teach, suggest or otherwise render obvious all of the limitations recited in the claims. *Id.* Patent Owner contends that the combination of Suga and Gorsuch does not render the '294 patent claims obvious. Resp. 1, 16–63 (citing Ex. 2001 ¶¶ 59–209). In overview, Patent Owner contends the Petition "is based upon flawed assertions of the Petitioner's Expert who equates prioritizing network

connection and prioritizing network use to the '294 Patent's selection based upon an activation cue in response to an 'invariable activation cue'." *Id.* at 1. Patent Owner also challenges the Suga translator's declaration and certification as non-compliant under 37 C.F.R. § 42.63. *Id.* at 2.

"In an *inter partes* review, the burden of persuasion is on the petitioner to prove 'unpatentability by a preponderance of the evidence,' 35 U.S.C. § 316(e), and that burden never shifts to the patentee." *In re Magnum Oil Tools Int'l Ltd.*, 829 F.3d 1364, 1375 (Fed. Cir. 2016) (quoting *Dynamic Drinkware, LLC v. Nat'l Graphics, Inc.*, 800 F.3d 1375, 1378 (Fed. Cir. 2015)); *see also Aqua Products, Inc. v. Matal*, 872 F.3d 1290, 1306 (Fed. Cir. 2017 (en banc (quoting *Magnum Oil*)).

A patent claim is unpatentable under 35 U.S.C. § 103(a) if the differences between the subject matter sought to be patented and the prior art are such that the subject matter as a whole would have been obvious to a person of ordinary skill in the art at the time the invention was made. *See KSR Int'l Co. v. Teleflex Inc.*, 550 U.S. 398, 406 (2007) (quoting 35 U.S.C. § 103(a)). Obviousness is resolved based on underlying factual determinations, including: (1) the scope and content of the prior art; (2) any differences between the claimed subject matter and the prior art; (3) the level of ordinary skill in the art; and (4) objective evidence of nonobviousness, i.e., secondary considerations. *Graham v. John Deere Co.*, 383 U.S. 1, 17–18 (1966). A party who petitions the Board for a determination of obviousness must show that "a skilled artisan would have been motivated to combine the teachings of the prior art references to achieve the claimed invention, and that the skilled artisan would have had a reasonable expectation of success in doing so." *Procter & Gamble Co. v. Teva Pharms.*

USA, Inc., 566 F.3d 989, 994 (Fed. Cir. 2009) (quoting *Pfizer, Inc. v. Apotex, Inc.*, 480 F.3d 1348, 1361 (Fed. Cir. 2007)).

We assess Petitioner's evidence and argument according to the above-referenced obviousness standard. For the reasons given below, we determine the Petition has established by a preponderance of the evidence that claims 1–20 of the '294 patent are unpatentable as obvious over Suga and Gorsuch. We begin our analysis with a discussion of the Suga and Gorsuch references.

1. Overview of Suga

Suga, titled "Portable Information Device and Line Switching Method," is directed to "[a] cell phone [] configured to selectively switch and use one of a plurality of wireless phone lines . . . and to prioritize use of a wireless LAN line for data transmission." Ex. 1005, code (54), Abstract (code (57)). Suga Figure 1 (annotated), reproduced below from the Petition, depicts cell phone 1 (yellow) configured to switch between wireless cellular (red) and wireless LAN (purple) communication lines:

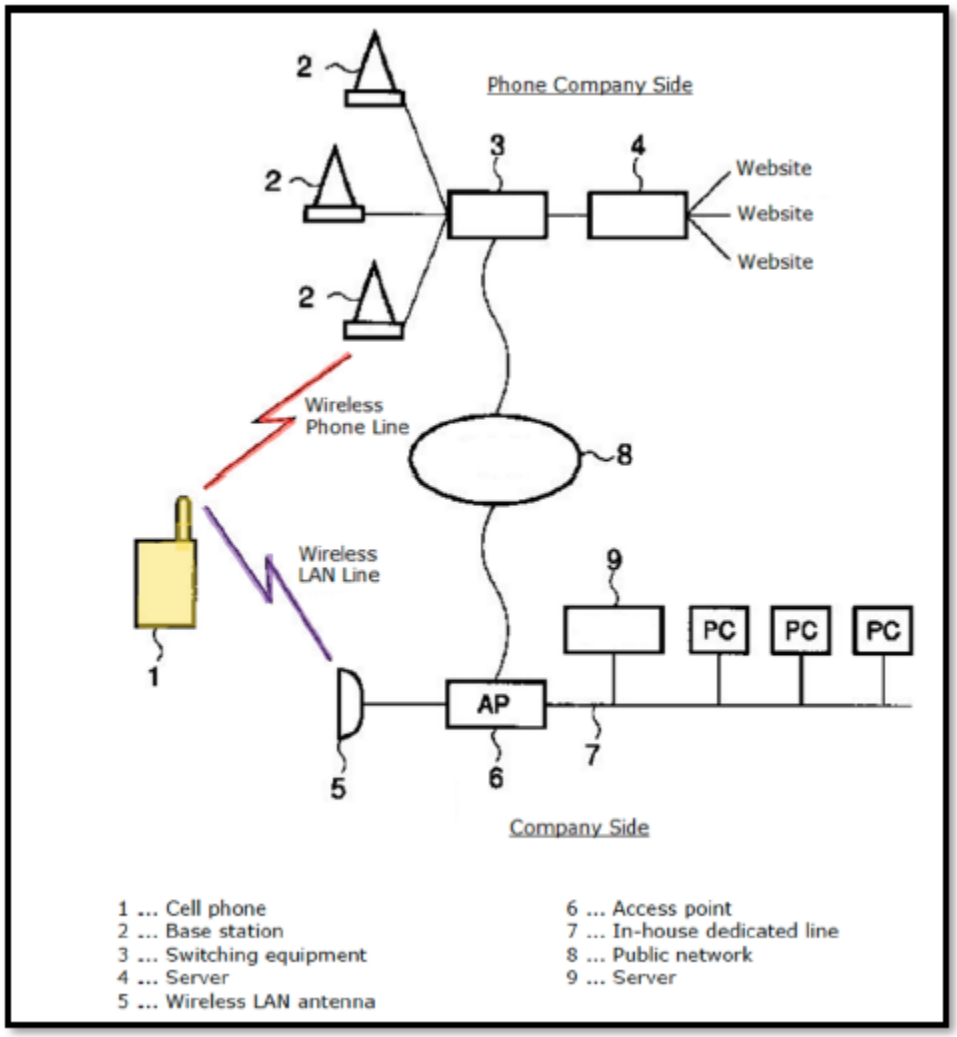

Pet. 11–12 (citing Ex. 1004 ¶ 64; Ex. 1005 ¶¶ 16, 35–37, 52, Fig. 1). Suga discloses that the cell phone in Figure 1 "is configured to switch selectively between a wireless phone line and wireless LAN line," can be "set to prioritize use of a wireless LAN line during a data transmission," and also can be "set to automatically switch to a wireless phone line if connection to a wireless LAN line is not possible." Ex. 1005 ¶ 17. For example,

> [b]ased on cellular mobile communication services provided by a phone company, the cell phone 1 is able to place calls to other phones via a wireless phone line that connects to a base station 2, exchange data with websites via an Internet connection service, and *exchange data (such as sending and receiving e-mail)* with other information devices. The cell phone 1 also

> exchanges data (such as e-mail) with other devices via a wireless LAN line.

Id. ¶ 16 (emphasis added). The Petition relies on the data exchange taught by Suga's email embodiment. Pet. 11–15, 32–37.

Suga's control technology is depicted in annotated Figure 2 below:

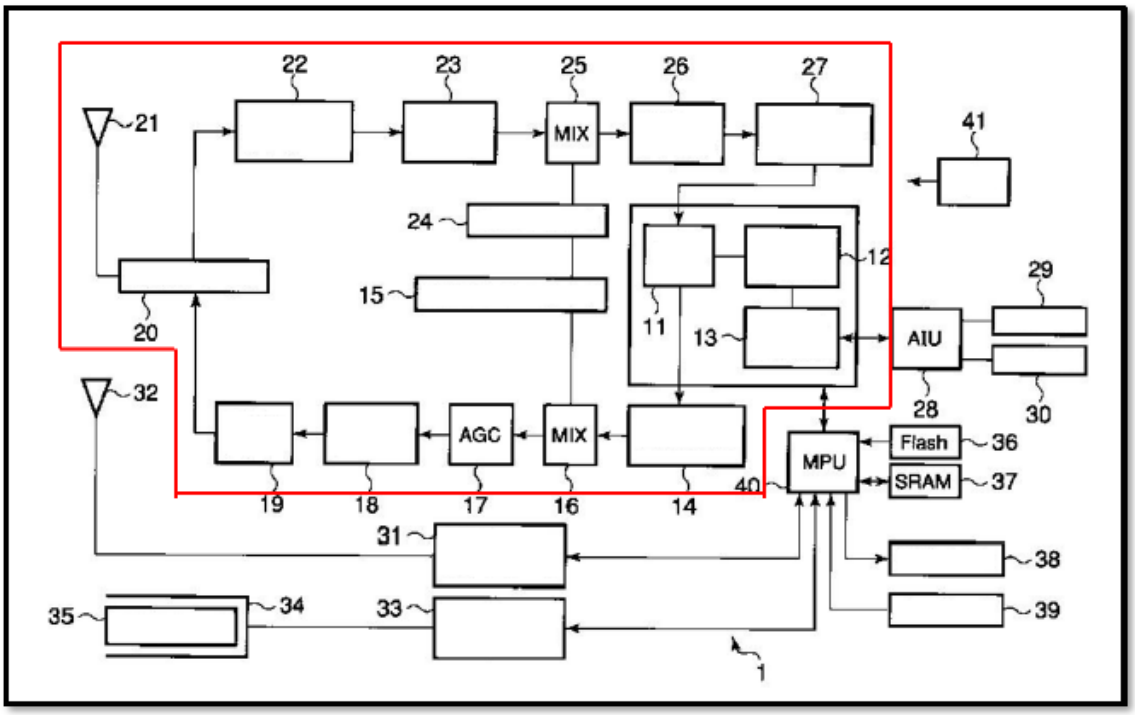

Pet. 13 (citing Ex. 1005, Fig. 2 (annotated)). In Suga Figure 2, wireless LAN controller 31, under the control of Master Processing Unit ("MPU") 40, allows the cell phone to transmit and receive data, such as email, through a W-LAN connection. Ex. 1005 ¶¶ 34, 47. The cell phone is also equipped with cellular transceiver circuitry shown within the red boundary. Pet. 12–13 (citing Ex. 1005 ¶¶ 29–31, 34, Fig. 2). Suga further discloses that when a "user gives instructions to send data such as an e-mail, the controller determines whether or not the 'Priority use of wireless LAN' setting has been enabled." Ex. 1005 ¶ 47.

2. Overview of Gorsuch

Gorsuch, titled "Dual Mode Subscriber Unit for Short Range, High Rate and Long Range, Lower Rate Data Communications," discloses techniques for a mobile communication device to switch between a local wireless connection (W-LAN), *e.g.*, WiFi, and a long-range cellular network connection. Ex. 1006, 3:25–28. In Gorsuch, a mobile communication device connects directly to a W-LAN when available and "automatically reverts" to a cellular network (CDMA) when the W-LAN is unavailable (*e.g.*, when out of range of a W-LAN base station). *Id.* at 3:25–28; *see also id.* at 3:16–19 ("a device which can automatically select the cheaper and faster W-LAN when possible . . . and to resort to the long range cellular network when access to the W-LAN is not possible"). To switch between the W-LAN and CDMA transceivers and connections, the mobile communication device includes a W-LAN detection circuit. *Id.* at Abstract, 4:31–5:1, 13:14–22, 14:10–14, 16:1–10, Fig. 6.

The W-LAN detection circuit detects the availability of a W-LAN base station by receiving a "beacon frame" or "beacon signal" transmitted at regular intervals by the W-LAN base station. *Id.*, 16:1–5; *see also id.*, Abstract, 4:31-5:1, 13:14–22, 14:10–14. If the W-LAN detection circuit receives a beacon frame, the mobile communication device is switched to a W-LAN communication path. *Id.* at Abstract, 16:6–8 ("switches 211A and 211B are switched to the position shown to utilize the W-LAN protocol converter 230 and transceiver 240"), Fig. 6. If no beacon frame is received, the device is set to a long range cellular CDMA communication path. *Id.*, Abstract, 16:3-5 ("If no W-LAN base station is detected, switches 211A and 211B are controlled by the detection circuit 201 such that the CDMA

protocol converter 130 is switched in along with the CDMA transceiver 140"), Fig. 6.

3. Analysis of Claim 1 in View of Suga and Gorsuch

Our analysis of independent claim 1 applies equally to independent claims 10–12 and 19 of the '294 patent, unless otherwise noted. Patent Owner's Response addresses independent claims 10–12 and 19 by cross-referencing its argument and Mr. Zaheer's declaration testimony addressing independent claim 1, and also adding conclusory arguments in conjunction with a cross-reference to claim 1 or to claim 1 and certain dependent claims.[6] Resp. 49–54, 60–63. Mr. Zaheer's Declaration does the same. Ex. 2001 ¶¶ 135–165, 194–206. For the reasons articulated below, we determine the Petition has demonstrated by a preponderance of the evidence that independent claim 1 is unpatentable as obvious over Suga and Gorsuch.

a. Suga Translation Declaration

The Suga reference is a Japanese language patent publication (2003–110751) published April 11, 2003. Ex. 1005, 1, 20–28. Petitioner commissioned a translation of Suga into the English language and filed a Translation Certification signed by a project manager at the company where the Suga reference was translated. Reply 1 (citing Ex. 1005, 20). Patent Owner objected to the Translation Certification because the project manager did not attest to having "personal knowledge of the actual translation" and,

---

[6] For example, Patent Owner's Response addresses independent claim 11 Limitation [11c.iv] by cross-referencing claim 1, dependent claims 8 and 9, and Mr. Zaheer's Declaration testimony addressing claims 8 and 9. Resp. 51–52. The Response adds the conclusory argument that "[a]n 'activation cue' and a 'direct link' are not described in the combination of *Suga* in view of *Gorsuch* as discussed for independent claim 1 and dependent claims 8 and 9." Our discussion of claims 1, 8, and 9 applies to claim 11, and so forth.

therefore, argued the Translation Certification was non-compliant under our rules. Prelim. Resp. 3–4 (Paper 6) (citing 37 C.F.R. § 42.63). We instructed Petitioner to file a compliant affidavit within 10 business days our Institution Decision. Paper 8, 18 n.6.

Within 10 business days our decision, Petitioner filed a Translation Certification signed by the translator who had translated Suga from Japanese into English. Reply 1 (citing Ex. 1017, 20). The Translation Certification was executed by the translator under penalty of perjury pursuant to 18 U.S.C. § 1001. *Id.* At the oral hearing, Counsel for Petitioner confirmed the English translation of Suga in Exhibit 1017 was identical to the English translation in Exhibit 1005. Tr. 14:13–15:1. Counsel further confirmed the only difference between the two exhibits was the Translation Certification in Exhibit 1017, signed by the translator who translated the Suga reference, and that Patent Owner had not sought to depose the translator. *Id.* at 15:2–9.

Patent Owner contends Exhibit 1017 constitutes "new matter" because it is a "completely different attestation signed by a different person[.]" Resp. 2. Patent Owner further contends that "***[t]he English translation should have July 29, 2024, as a priority date and is not a prior art reference***." *Id.* July 29, 2024 is the date the Translation Certification in Exhibit 1005 was signed by the translation service's project manager. Ex. 1005, 20. Why the Translation Certification date should be used as the priority date for the Suga reference, published in April 2003, Patent Owner does not explain. *Id.*; Sur-Reply 1–4.

We agree with Petitioner that Exhibit 1017 complies with our translation rule. Reply 1–2. Our rule obligates a party to provide an English translation of a non-English language document, and "an affidavit attesting

to the accuracy of the translation must be filed with the document." 37 C.F.R. § 42.63(b). Here, Petitioner has satisfied both requirements.

First, we note Petitioner did file a Translation Certification for the English language translation of Suga in Exhibit 1005, executed by the project manager and attesting that "[t]o the best of my knowledge, the aforementioned documents are a true, full and accurate translation of the specified documents." Ex. 1005, 20. Exhibit 1005, including the Translation Certification, was filed with the Petition on December 3, 2024. Paper 1; Ex. 1005, 20. The only non-compliance was the absence of a notarized "affidavit" or declaration making the attestation subject to the penalty of perjury warning pursuant to 18 U.S.C. § 1001. Nothing in the statute or Rule 42.63 prevents Petitioner from filing a compliant affidavit after the initial filing, in accordance with our institution order.

Second, it has been our regular practice to permit parties to file a satisfactory affidavit or declaration within a reasonable time after an objection has been lodged and considered by the Board. *See Hengdian Group DMEGC Magn. Co. v. Hitachi Metals, Ltd.*, IPR2017-01312, Paper 14, 2 (PTAB Jan. 3, 2018) ("order[ing] Petitioner to file satisfactory affidavits attesting to the accuracy of the translation within ten business days of the Decision").

Third, Patent Owner's contention, that Exhibit 1017 is "new matter in this IPR filed after the Petition was filed [and] must be excluded" because the original Translation Certification was not signed by the translator having "personal knowledge" of the translation, is also without merit or cited support. Sur-Reply 4 (asserting project manager "did not have personal knowledge of the translation's accuracy; he only stated that '[t]o the best of my knowledge'") (citing Ex. 1005, 20). Rule 42.63(b), on which Patent

Owner relies for support, does not recite such a requirement or compel exclusion of the Suga translation. Patent Owner did not depose the project manager or translator from the translation service and does not have an evidentiary basis to assert that the project manager did not have "personal knowledge" of the translation. Tr. 15:6–9. Patent Owner, moreover, does not challenge the accuracy of the translation or that the translator's sworn declaration filed with Exhibit 1017 is compliant, other than asserting—without support—that the Translation Certificate in Exhibit 1017 is "improper new matter in this IPR filed after the Petition was filed [and] must be excluded." Sur-Reply 4; Tr. 14:1–15:6, 31:5–22. Patent Owner does not cite another Board rule or applicable case law in support of its position. Resp. 2; Sur-Reply 1–4.[7]

For the reasons given above, we find that Petitioner filed "an affidavit attesting to the accuracy of the translation" of the Suga reference in compliance with Rule 42.63(b).

b. Motivation to Combine and Analogous Art

Petitioner offers several motivations to combine Suga and Gorsuch in the manner claimed in the '294 patent with a reasonable expectation of success. First, the Petition asserts a POSITA "would have looked to known solutions in the art for detecting W-LAN availability," such as Gorsuch which "includes a starkly similar disclosure to *Suga*, making its solution an intuitive one to incorporate into *Suga's* cellular phone." Pet. 23–24 (citing Ex. 1004 ¶ 74). As Petitioner points out, "both *Suga* and *Gorsuch* teach dual-transceiver equipped mobile devices that automatically choose a

[7] We separately address Patent Owner's Motion to Exclude Suga Exhibits 1005 and 1017 at the end of this Final Written Decision.

prioritized network based on availability." *Id*. Second, we also agree with Petitioner that the evidence of record supports the assertion that "a POSITA would recognize that implementing *Gorsuch's* W-LAN detection circuit in *Suga's* cell phone would improve *Suga's* similar device in the same way it benefits *Gorsuch*," namely by assessing "the W-LAN connection to determine its availability . . . without attempting to transmit the full data payload." *Id*. at 24–25 (citing Ex. 1004 ¶ 75; *KSR*, 550 U.S. at 417 (("[I]f a technique has been used to improve one device, and a person of ordinary skill in the art would recognize that it would improve similar devices in the same way, using the technique is obvious[.]")). The known-technique rationale applies here regarding use of the Gorsuch W-LAN detection circuit in Suga's cell phone to determine whether W-LAN communications are possible, or whether the cellular phone communication network must be used instead. Ex. 1004 ¶¶ 72–76.

The Suga-Gorsuch combination provides the "benefits of automatically detecting network availability and choosing the optimal available network [that] was widely recognized and implemented in the art." Pet. 26 (citing Ex. 1004 ¶ 76; Ex. 1007, 1:21–27; 2:22–24, 16:29–41, Fig. 4; Ex. 1008, 5:52–54, 8:8–14, Fig. 6; Ex. 1009, 59). Dr. Buehrer explains:

> [I]ntegrating *Gorsuch's* W-LAN detection circuit in *Suga's* cellular phone would have been straightforward and well within the capabilities of a POSITA. As discussed above, a number of cellular phones at the time included both cellular and W-LAN (Wi-Fi) connectivity. Further, a POSITA would understand how to physically connect the W-LAN detection circuit to the MPU and would understand how to program the MPU to use the information provided by the W-LAN detection circuit. Further, the benefits of automatically detecting network availability and choosing the optimal available network was widely recognized and implemented in the art.

Ex. 1004 ¶ 76. The Petition and Dr. Buehrer cite the example of a Nokia cellular phone that included "seamless handoff of mobile voice and data from a wide area cellular network to WLAN or Wireless Fidelity (Wi-Fi), so it is possible to connect at a high speed to the internet from virtually anywhere." Pet. 26 (citing Ex. 1004 ¶ 76; Ex. 1009, 59). The Petition and Dr. Buehrer provide additional examples that are consistent with and corroborate Dr. Buehrer's expert opinion testimony quoted above. *Id.* at 26–27 (citing Ex. 1004 ¶ 76; Ex. 1008, 5:52–54, 8:8–14, Fig. 6; Ex. 1007, 1:21–27, 2:22–24, 16:29–41, Fig. 4).

Patent Owner's counter-arguments are unavailing. For example, Patent Owner's assertion that Suga "teaches the selection of a communication path rather than switching based on a trigger, e.g., an invariable activation command, in response to an invariable activation cue," misunderstands the claim language and Petitioner's argument. Resp. 17–19 (citing Ex. 1005 ¶¶ 47–49, Fig. 6; Ex. 2001 ¶¶ 60–62). The '294 patent claims recite an "*invariable activation command*" issued in response to a user selectively triggering the control device, not in response to an invariable activation cue, which is not language recited in the claim or described in the specification.[8] Patent Owner's argument does not undermine Petitioner's well-supported contention that Suga teaches selectively switching between

[8] Similarly, Patent Owner's assertion that "[n]either *Suga* nor *Gorsuch* teaches or describes an 'invariable activation cue' in addition to other elements," is not understood. Resp. 22 (citing *Elekta Ltd. v. ZAP Surgical Sys., Inc.*, 81 F.4th 1368, 1375, (Fed. Cir. 2023)). Patent Owner seems to be conflating an "*invariable activation command*" with an "*activation cue*."

two different data conveyance paths, i.e. switching selectively between a wireless phone line and wireless LAN line.[9]

Nor are we persuaded that "*Suga* and *Gorsuch* are from different fields of endeavor than the '294 Patent" as asserted by Patent Owner. Resp. 22 (citing Ex. 2001 ¶ 67). We agree with Petitioner that Suga and Gorsuch are in the same field of endeavor as the '294 patent because they are directed to mobile electronic devices that switch between data communication paths or networks. Pet. 16 (citing Ex. 1001, 13:47–49, 16:8–10, 17:27–32; Ex. 1004 ¶¶ 65, 71; Ex. 1005 ¶¶ 11, 45–52); Ex. 1006, Abstract, 3:29–4:4). Both Suga and Gorsuch teach dual-transceiver equipped mobile devices that can switch between available W-LAN (e.g., Wi-Fi) networks and long-range cellular networks to exchange data. Ex. 1005 ¶¶ 42–52; Ex. 1006, 3:16–4:11, 13:14–32, 16:1–12. We further agree with Petitioner that Patent Owner's expert, Mr. Zaheer, "does not clearly define the field of endeavor, provides no analysis of the intrinsic record that might support a specific definition, and even admitted under cross examination that he is unfamiliar with the legal standard for defining a field of endeavor." Reply 14 (citing Ex. 1019, 20:10–23:13).

We disagree with Patent Owner that the '294 Patent "is directed to data transfer security" to the extent Patent Owner argues for reading a security requirement or protocol into broader claim language. Resp. 22. As Petitioner notes, the explicit reference to "security" in the '294 patent describes that the mobile device may be equipped with "security software, as known in the art," without further explanation. Reply 14 (quoting Ex. 1001,

[9] Patent Owner acknowledges that "if any switching occurs, it is between phone lines and wireless LAN lines used to access the different networks." Resp. 19 (citing Ex. 1005, Abstract; Ex. 2001 ¶ 63).

16:52–57). We further agree with Petitioner that, although Mr. Zaheer testifies that a user PIN and biometric triggering options are security concepts, the '294 patent describes them as "***optional*** means of triggering" the claimed cell phone. *Id.* at 14–15 (citing Ex. 1019, 23:14–25); *see also* Ex. 1001, 8:36–56 ("Alternatively, control device 12 can include validation means such as a biometric parameter detector"), 15:14–18 (selective triggering "may be accomplished by entering a PIN").

Regardless, the '294 patent teaches that selectively triggering an invariable activation command may be accomplished by pressing a single button. Ex. 1001, 7:4–8 ("a manually activated button"), 8:29–36 ("a single manually activated button . . . which, when pressed, issues an activation command"), 10:52–56 ("triggering of control device 12 may comprise a single step, such as pressing a single button, or more than one step, such as pressing a button and concurrently applying one's fingerprint on a fingerprint scanner"). We credit Dr. Buehrer's testimony, that "a POSITA would not interpret the patent's reference to a 'control device' as *requiring* a security-based operation," because the '294 patent "expressly teaches that triggering may be performed using a simple 'button,' without any security function." Ex. 1021 ¶¶ 4–5 (emphasis added). It is improper to limit the field of endeavor to data security based on an optional feature found in only certain embodiments. We determine Suga and Gorsuch are in the same field of endeavor as the '294 patent because they are directed to mobile electronic devices that switch between data communication paths or networks.

For the reasons given above, we determine the mobile communication devices taught by Suga and Gorsuch are in the same field of endeavor as the '294 patent. We further determine that the known-technique rationale

supports a motivation to combine Suga and Gorsuch in the manner asserted in the Petition.

c. Claim 1 Limitations

We now turn to the parties' arguments regarding whether the Petition has established by a preponderance of the evidence that Suga and Gorsuch disclose, teach, suggest, or otherwise render obvious claim 1 of the '294 patent.

Limitation [1(Pre)]: "*A cellular phone, comprising:*"

The Petition contends that, if the preamble is limiting, Suga discloses Limitation [1(Pre)] because "*Suga* discloses 'cell phone' 1 that can 'exchange data with websites via an Internet connection service, and exchange data (such as sending and receiving email) with other information devices.'" Pet. 32 (citing Ex. 1004 ¶ 77; Ex. 1005 ¶ 16, Fig. 1). The Petition particularly points out Suga's cell phone functionality depicted in Figure 1. *Id.* Petitioner's contention is consistent with the cited disclosures in Suga and supported by Dr. Buehrer's declaration testimony.

Patent Owner does not address the preamble. Resp. 24–41.

We agree with the contentions in the Petition and determine the Petition establishes by a preponderance of the evidence that Suga discloses Limitation [1(Pre)].

Limitation [1(a)]: "*an electronic circuit capable of storing data therein, capable of processing data, and capable of data input and output*;"

The Petition contends that Suga discloses Limitation [1(a)] because "*Suga* discloses that the cell phone includes, among other parts, MPU 40, a memory card 35, flash memory 36, and SRAM 37 that comprise an

electronic circuit." Pet. 33 (citing Ex. 1005 ¶¶ 35–37, Fig. 2). The Petition addresses the claimed storing, processing, and exchange of data as follows:

> *Suga* further discloses the MPU 40 "controls the entire operation of the cellular phone 1[,]" including performing switching control between the cellular and W-LAN connections, and sending/receiving data "such as an e-mail" through either network. Therefore, a POSITA would understand that the MPU 40 "is capable of processing data[,]" "data [output,]" and "data input[.]" The memory card 35 "is used to store content handled by the cell phone 1" such as "e-mails, audio information, and video information." Flash memory 36 "is a memory built into the cell phone 1 and is used to store various types of data" and SRAM 37 "is a memory that provides a work area for the MPU 40." A POSITA would understand that a circuit including at least the MPU 40, memory card 35, flash memory 36, and SRAM 37 is "capable of storing data therein, capable of processing data, and capable of data input and output" to send and receive e-mails—functionality expressly ascribed to *Suga's* cellular phone.

Id. at 34–35 (citing Ex. 1004 ¶¶ 78–79; Ex. 1005 ¶¶ 35–37, 45–47, 53) (internal citations omitted). Thus, the Petition relies on Suga's control processing circuitry and associated memory for storing data such as emails, audio, and video as a disclosure of Limitation [1(a)].

Patent Owner contends that Suga does not disclose Limitation [1(a)] because the "stored data of the claim is the same data later exchanged in a later claim element," and the "stored data must also be the data that is sent in element [1.h.i] and [1.h.ii]." Resp. 25 (citing Ex. 2001 ¶¶ 72–75). Patent Owner further contends that the Petition fails to "identify what 'data' the Petitioner is referring to [in order to] meet" Limitation [1(a)] and the claimed data "cannot change to a different type of data each time it is cited." *Id.* Patent Owner's contentions are unavailing and inconsistent with the record.

First, the Petition identifies that Suga's cellular phone is capable of storing data as recited in Limitation [1(a)], which includes "e-mails, audio information, and video information." Pet. 34–35 (citing Ex. 1005 ¶ 35). The Petition particularly points out that Suga teaches the capability of storing, processing, and sending and receiving email data. *Id.* (citing Ex. 1004 ¶¶ 78–79; Ex. 1005 ¶¶ 35–37, 45–47 ("user gives instructions to send data such as an e-mail")); *see also id.* at 53 (citing Ex. 1004 ¶ 101) ("The user selection to send the email is processed by MPU 40 (part of the 'electronic circuit' in *Suga*), which initiates the sending of the email data to an external device via either the W-LAN line or wireless phone line."). Thus, Patent Owner's argument that the Petition fails to identify the stored data in Suga is unavailing.

Second, the Response appears to be reading a limitation from a preferred embodiment into claim language that is not so limited. Limitation [1(a)] recites "*an electronic circuit capable of storing data therein*" and does not recite or imply a data transfer function for "stored" data as argued by Patent Owner. Resp. 25. For example, Limitation [1(a)] does not recite the capability of storing "user data" such as a credit card number for transmission to an external data exchange device, as exemplified in the preferred embodiment of Figure 4 of the '294 patent. Ex. 1001, 16:28–46 ("user data being transferred from electronic circuit to first transceiver and then to data exchange device . . . for example a credit card number"), 17:5–17 ("user data being transferred from electronic circuit to second transceiver and then to remote data exchange device").

Limitations [1(h)(i)] and [1(h)(ii)], which follow on from Limitation [1(a)], recite "*<u>sending data</u> from said electronic circuit to the first [second] data exchange device*." Thus, claim 1 does not recite sending "stored" data

from the electronic circuit to a data exchange device or otherwise rely on antecedent basis—such as "said data" or "the data"—to limit the data being sent from the electronic circuit. In short, Patent Owner construes limitation [1.a] in a manner that would improperly limit the claims to a preferred embodiment for transmitting stored data. Moreover, even under Patent owner's improper construction, Suga's transmission of stored email data would satisfy Limitations [1(h)(i)] and [1(h)(ii)].

For the reasons given above, we determine the Petition establishes by a preponderance of the evidence that Suga discloses Limitation [1(a)].

> **Limitation [1(b)]:** "*a user-triggered control device operatively linked to said electronic circuit, said user-triggered control device configured to be operated by a user via one of a button, a keypad, a tactile screen, and a biometric parameter detector, and after being operated issue an invariable activation command, with said invariable activation command being issued when said control device is selectively triggered by the user*;"

Petitioner contends that Suga discloses Limitation [1(b)] because "*Suga* discloses keyboard 39 ('a user-triggered control device') that a user engages (*i.e.*, 'selectively trigger[s]') to initiate the process of sending an email." Pet. 35 (citing Ex. 1004 ¶¶ 70–85). The Petition further asserts that, "because the choice between wireless networks is based on the availability of W-LAN and cannot be influenced by the user (at the time of transmission), the device's command to transmit an email ('activation command') is 'invariable[,]' as claimed." *Id.*; *see also* Ex. 1004 ¶¶ 82 ("providing the user no option to *vary* which connection is used for a given transmission"), 83 ("The user's 'trigger'—pressing a button to send an email—causes *Suga's* electronic circuit to generate the activation command."), 85 ("by pressing one or more buttons on the keyboard 39, a

signal is sent to the MPU 40 in *Suga* that is an 'invariable activation command' or alternatively causes one to be generated by the MPU").

Dr. Buehrer's cited testimony is based on, and consistent with, the disclosures in Suga:

> "Prioritize use of wireless LAN" and "Automatically switch to phone line if wireless LAN line cannot be used" [Fig. 5];
>
> When the user gives instructions to send data such as an e-mail, the controller determines whether or not the "Priority use of wireless LAN" setting has been enabled (step A1) [Fig. 6]; and
>
> If communication is possible, communication is performed (step A6) [Fig. 6].

Ex. 1005 ¶¶ 43, 47, 52, Figs. 5, 6. Thus, the Petition and Dr. Buehrer make the common sense assertion that a POSITA would have understood that "by pressing one or more buttons on the keyboard," which is operatively connected to the MPU, a user would "initiate the [email] transmission." Pet. 36 (citing Ex. 1004 ¶ 81; Ex. 1010, Abstract, ¶¶ 2–3, Figs. 1, 4, and 5). As stated by the Federal Circuit, the obviousness analysis "may include recourse to logic, judgment, and common sense available to the person of ordinary skill." *Perfect Web Techns., Inc. v. InfoUSA, Inc.*, 587 F.3d 1324, 1329 (Fed. Cir. 2009); *see also Randall Mfg. v. Rea*, 733 F.3d 1355, 1362–1363 (Fed. Cir. 2013) ("recognizing the role of common knowledge and common sense" in an obviousness analysis).

We find the Petition's contentions to be consistent with the cited disclosures in Suga and our construction of an "*invariable activation command*"—a command issued to initiate a data conveyance operation, such that the command itself is the same regardless of which data conveyance operation is initiated. We are also persuaded by Dr. Buehrer's cited testimony, which we find compelling and consistent with the disclosures in

Suga and our claim construction. We find Patent Owner's arguments unavailing and not consistent with the disclosures in Suga or our claim construction.

Patent Owner attempts to distinguish Suga by reading preferred embodiment limitations into broader claim language without a sufficient evidentiary basis or persuasive reason for doing so. Resp. 25–31. For example, the independent claims do not require a control device to be used as a "validation means" for "activating a security feature," such as entering a PIN, in order to issue an invariable activation command. *Id.* at 25–27 (citing Ex. 1001, 8:45–47 ("validation means in the form of . . . a personal identification number (PIN)"), 19:1–6 (Limitation [1(b)]); Ex. 1005 ¶ 36; Ex. 2001 ¶¶ 76–78), *see also id.* at 30–31 ("The purpose of the '294 patent is security for transmitted data.") (citing Ex. 1005 ¶¶ 43–47). We underscore the point by noting that even dependent claim 4 recites a "*control device is <u>one of</u> a manually activated button*, *a keypad for receiving a PIN code, a biometric parameter detector and a combination thereof*," as does dependent method claim 18. Ex. 1001, 19:50–53, 22:31–36. Nor are the claims limited to a data exchange for executing a financial transaction as argued by Patent Owner. Resp. 26–27; Reply 15–16. When a user presses a button on Suga's keypad to send an email, Limitation [1(b)] is satisfied. Thus, we decline to limit the independent claims to a preferred embodiment such as a user-triggered control device where a user enters a PIN for activating a security feature or executing a financial transaction as urged by Patent Owner.

Similarly, Patent Owner's argument that Suga does not disclose information such as "the messaging to the controller, interaction between the email application and the cell phone's operating system, or whether the cell phone even has an operating system," is not commensurate with the scope of

the independent claims. Resp. 27–28 (citing Ex. 2001 ¶¶ 79–80). The independent claims do not recite such limitations. The Petition, moreover, establishes by a preponderance of evidence that email communication and implementation details were within the skill level of a POSITA. *See* Pet. 26–27 (citing Ex. 1004 ¶ 76; Ex. 1007; Ex. 1008; Ex. 1009), 37–39 (citing Ex. 1004 ¶¶ 82–85; Ex. 1005 ¶¶ 43, 47–52, Figs. 5, 6). Patent Owner's related argument, that there is "[n]o evidence of an email selecting a network path[] disclosed in any of the references," is not understood or consistent with the recited claim language. Resp. 28–30 (citing Ex. 2001 ¶¶ 80–82).

We agree with Petitioner that Patent Owner's further argument—that a user can configure or change Suga's data communication path settings (W-LAN or cellular network) such that a command to send an email is not "invariable"—is not persuasive. Reply 18–20 (citing Resp. 30–31, 35–36, 38–39); Ex. 1005 ¶¶ 43, 47–52, Fig. 6; Ex. 1019, 48:6–49:13). We agree with Petitioner that in Suga the priority settings to use the W-LAN communication path, if available, and "automatically switch" to the cellular network if the W-LAN "cannot be used," are set before the user presses a button on the keypad to send an email. Ex. 1005 ¶¶ 42–52, Figs. 5, 6. The user cannot control or adjust the data communication path settings after triggering the device to send the email as Patent Owner suggests.

Patent Owner's expert, Mr. Zaheer, confirmed the correct operation of Suga's cell phone during his deposition:

> Q. Is there any suggestion in Suga that once the user asks the phone to make a data transmission, that they have the opportunity to go back and change settings, or does the Figure 6 flow chart just kind of automatically apply the previously made settings?
>
> A. I'll -- I'll have to review the patent again, but as a -- as a POSITA and as an expert reading Suga, the flow will follow --

> Figure 6 will follow the settings. So the settings has to be made on the phone – [] and that flow will operate as directed in the settings.

Ex. 1019, 48:6–49:13 (cited in Reply 19–20). In short, we agree with Petitioner that Suga's command to transmit an email is "invariable." Reply 20. The same activation command is issued whenever the user selectively triggers an email transmission, and the network path is automatically determined by the state of the MPU (i.e., the switching element)—a first state when the W-LAN is available (beacon signal detected) and a second state when the W-LAN is not available (no beacon signal detected).

For the reasons given above, we determine the Petition establishes by a preponderance of the evidence that Suga discloses Limitation [1(b)].

> **Limitation [1(c)]:** "*a first data transceiver operatively linked to said electronic circuit, said first data transceiver being for exchanging data between said electronic circuit and a first external data exchange device over a first communication link*;"
>
> **Limitation [1(d)]:** "*a second data transceiver operatively linked to said electronic circuit, said second data transceiver being for exchanging data between said electronic circuit and a second external data exchange device over a second communication link that is distinct from said first communication link*;"

The Petition contends that Suga discloses Limitations [1(c)] and [(d)] because "*Suga* discloses a cell phone 1 that transmits data through either a W-LAN network (using a first data transceiver over a first communication link) or a cellular network (using a second data transceiver over a second, distinct communication link)." Pet. 39 (citing Ex. 1004 ¶¶ 86–91; Ex. 1005 57, Fig. 1). The Petition cites Suga Figure 1, discussed above, which depicts a cell phone operatively connected to both a W-LAN access point ("*first external data exchange device*") over a W-LAN line ("*first communication link*") and a wireless cellular network base station ("*second external data*

exchange device") over a wireless phone line ("*second communication link*"). *Id.* at 39–40. The Petition asserts that both the W-LAN transceiver and cellular transceiver are connected to the cell phone's "*electronic circuit*," as depicted in Suga Figure 2. *Id.* at 40–43 (citing Ex. 1004 ¶¶ 88–91; Ex. 1005 ¶¶ 16, 29–30, 34, 39, 41, Fig. 2).

The Petition asserts, in particular, that Suga teaches a cell phone having "separate transceiver hardware" that allows a cell phone to "***exchange data (such as sending and receiving email) with other information devices***" either via the cellular network connection or W-LAN connection. *Id.* at 41 (citing Ex. 1004 ¶ 88; quoting Ex. 1005 ¶ 16). The email data exchange occurs over either (i) the W-LAN ("*first communication link*") between a "*first data transceiver*" on the cell phone and the W-LAN access point ("*first data exchange device*") or (ii) the cellular network ("*second communication link*") between a "*second data transceiver*" on the cell phone and the cellular network base station ("*second data exchange device*"). *Id.* at 39–41 (citing Ex. 1004 ¶ 86; Ex. 1005 ¶¶ 16, 34, 57, Figs. 1, 2). The Petition further explains the details of the transceiver component connections under control of the MPU. *Id.* at 41–44 (citing Ex. 1004 ¶¶ 90–91; Ex. 1005 ¶¶ 29–31, 34, 39, 41, Figs. 1, 2).

Patent Owner contends that the "'data exchange device' is the device identified as the data's end destination, not a network access point or network infrastructure that passes the data," and "not intermediary devices that support creating a network connection that routes packets blindly at a network level." Resp. 31–32 (citing Ex. 1001, 9:1–11; Ex. 2001 ¶¶ 84, 85). Patent Owner emphasizes that "[n]etworking devices, such as access points or cellular base stations, carry data for other devices and are not the endpoint or node for receiving the data." *Id.* (citing Ex. 2001 ¶ 86). As we indicated

above in our construction of a "[*external*] *data exchange device*," however, the cited portion of the '294 patent describes a data exchange device as "any sort of data exchange device comprising an electronic circuit (not shown) therein and a data transceiver therein able to cooperate with [the] transceiver of [the] device . . . or any other suitable data exchange device." Ex. 1001, 9:3–11. Neither the independent claims nor the '294 patent specification limits the claimed data exchange device in the manner argued by Patent Owner.

Patent Owner's argument improperly reads limitations into broader language recited in the independent claims. For example, dependent claim 8 recites "*wherein said first data transceiver comprises a proximity transceiver for accomplishing a wireless data exchange with a first external data exchange device through* <u>*a direct link*</u> *representing said first communication link where the cellular phone is conveyed toward a* <u>*close proximity*</u> *of the first external data exchange device*." Ex. 1001, 19:62–20:2 (emphases added). Independent claim 1, from which claim 8 depends, recites broader language that does not require a direct link, close proximity, a network endpoint, or a node, and does not otherwise exclude "intermediary" data exchange devices such as Suga's W-LAN access point and cellular base station. Claim 1 recites only that the data transceivers are "*operatively linked*" to the electronic circuit in the cell phone and are "*for exchanging data between said electronic circuit and a first [second] external data exchange device*," claim elements that the Petition establishes are disclosed in Suga as discussed above.

We also agree with Petitioner that "a POSITA would have understood Suga's access point and base station provide bidirectional data

communications on their respective networks." Reply 21 (citing Ex. 1021 ¶¶ 6–10). As Dr. Buehrer testifies:

> A POSITA would also understand that Suga's access point and base station devices necessarily "exchange data" with the mobile device. For example, consistent with IEEE 802.11, Suga's access point transmits beacon frames that are received by Gorsuch's WLAN detection circuit 201, allowing the device to determine WLAN availability.

Ex. 1021 ¶ 9; *see also* Ex. 1005 ¶ 16. Thus, we are not persuaded by Patent Owner's conclusory and unsupported argument that in Suga "[n]o data is being exchanged; at most, data is transmitted according to the user's priority parameters from one device and eventually, if the device is on the network, received." Resp. 33. Petitioner's reliance on the testimony of Dr. Buehrer to explain the data exchange set forth in the Petition and in Petitioner's Reply to Patent Owner's argument, moreover, is not "impermissible under 35 U.S.C. § 311(b)" as Patent Owner contends. *Id.* [10]

For the reasons given above, we determine the Petition establishes by a preponderance of the evidence that Suga discloses Limitations [1(c)] and [1(d)].

> **Limitation [1(e)]:** "*a cue receiver operatively linked to said electronic circuit for receiving an activation cue from a source external to said cellular phone*;"

Petitioner contends that Suga in combination with Gorsuch discloses Limitation [1(e)] because:

> the proposed combination incorporates *Gorsuch's* W-LAN detection circuit 201 ("cue receiver") into *Suga's* cellular phone

[10] We also find Patent Owner's argument that "the data exchange device originates or terminates data using one of the other receivers, as the second receiver is a communication network transceiver," to be unpersuasive for the same reasons. Sur-Reply 5.

> to provide information on the availability of W-LAN. With this information, *Suga's* MPU 40 ("electronic circuit") can choose the proper transceiver for a data communication (*e.g.*, an email transmission).

Pet. 44–45 (citing Ex. 1004 ¶¶ 92–93; Ex. 1005, Fig. 2; Ex. 1006 Abstract, 4:31-5:1, 13:14-22, 14:10-14, 16:1-12, Fig. 6). The Petition illustrates the proposed combination, with "*Gorsuch's* W-LAN detection circuit 201 inserted in parallel to *Suga's* W-LAN transceiver circuitry and connected to MPU 40," in Suga annotated Figure 2 reproduced below:

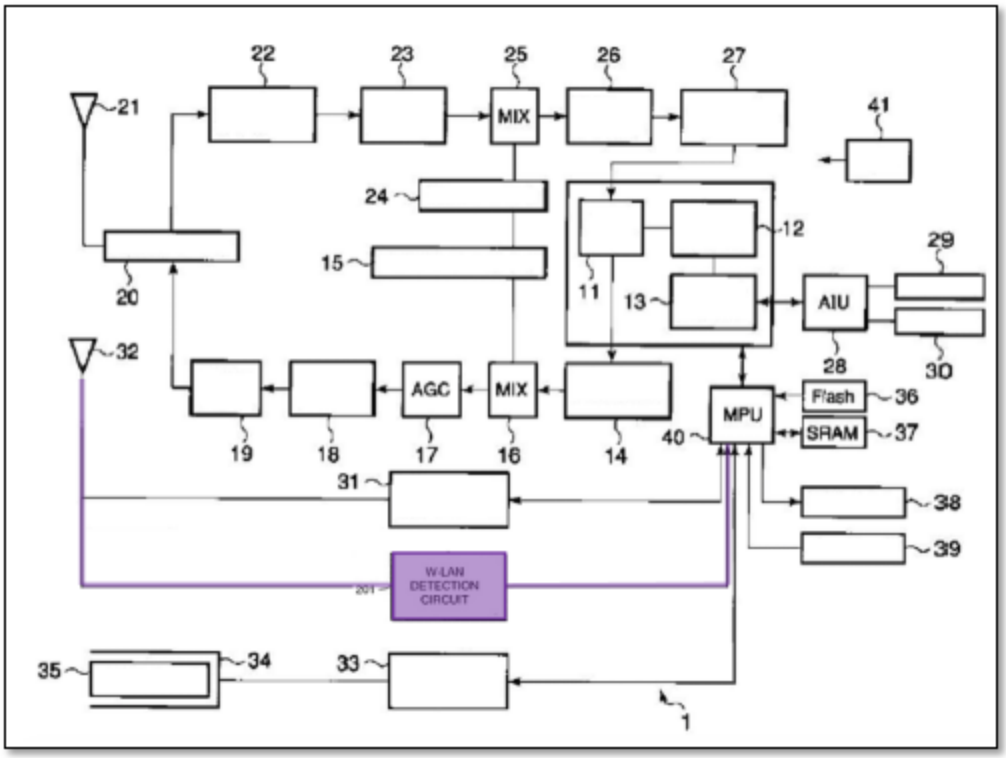

Id. (citing Ex. 1004 ¶ 92; Ex. 1005, Fig. 2). The Petition explains that:

> *Gorsuch's* W-LAN detection circuit 201 [purple] receives a beacon frame or beacon signal ("activation cue") from a W-LAN base station 611, which is "a source external to said cellular phone[.]" "IEEE 802.11 specifies that a beacon frame should be transmitted at regular intervals" by a W-LAN hub. A POSITA would have understood that *Suga's* access point 6, like *Gorsuch's* W-LAN base station 611, also emits a beacon signal.

> Further, access point 6 is external to cell phone 1, as the two are linked via a "wireless LAN line" (*i.e.*, a wireless connection).

Pet. 45–46 (citing Ex. 1004 ¶ 93 (discussing Ex. 1005 ¶¶ 39–41 and explaining that *Suga's* access point would emit beacon frames in order to remain compliant with the IEEE 802.11 standard) (internal citations omitted)); Ex. 1006, Abstract, 4:31–5:1, 13:14–22, 14:10–14, 16:1–12, Fig. 6). Dr. Buehrer explains that, because Suga's W-LAN transmitter is compliant with the referenced IEEE standard, "access point 6 of *Suga* emits a beacon signal." Ex. 1004 ¶ 93.

The Response relies primarily on Patent Owner's proposed construction of "*activation cue*" as a predetermined indicator to distinguish the proposed combination of Suga and Gorsuch from limitation [1(e)]. Resp. 34–37 (citing Ex. 1001, 9:24–27, 10:14–16, 12:60–62; Ex. 2001 ¶¶ 84–85, 89–93). Patent Owner contends, for example, that the "electronic device must recognize the 'activation cue' as an activation cue (it does not need to be a bit sequence, but it does need to be predetermined)," and the activation cue "has to be of a specific type, it has to be predetermined." Resp. 34, 37. For the reasons explained above in our claim construction analysis, we decline to limit the recited "*activation cue*" to a predetermined indicator. Therefore, we are not persuaded by Patent Owner's argument attempting to distinguish Suga's connection to a wireless LAN, via emission of a beacon signal from the W-LAN access point, as a form of data communication that is not a predetermined indicator.

Patent Owner does not directly address, much less rebut, the Petition's argument and supporting evidence that a POSITA would have known to use the Gorsuch W-LAN detection circuit to receive and detect ("*cue receiver*") beacon signals emitted from Suga's W-LAN access point as an "*activation*

cue" that sets the state of the switching element in Suga's cell phone. Rather, Patent Owner contends that Suga in view of Gorsuch does not disclose an "*activation cue*"

> because: (1) the activation cue must originate at a data exchange device and identify that a data exchange device is ready to receive data, (2) a POSITA would understand that connection to a network does not mean a data exchange device is connected to the network, and (3) a POSITA would understand that a network ready to receive data is different than a network receiving data for a device connected to the network. Routing packets based on headers does not involve higher layers decoding the packets and retrieving data, i.e., exchanging data. All the data is never present in wireless access points, routers, and switches.

Resp. 37 (citing Ex. 2001 ¶¶ 92–93).

The Response arguments do not address Petitioner's annotated Figure 2 from Suga depicting a "*cue receiver*" (W-LAN detection circuit 201 taught by Gorsuch) for receiving an "*activation cue*" (beacon signal) from a "*source external to the cell phone*" (W-LAN access point). Patent Owner again reads limitations from preferred embodiments described in the '294 patent into broader claim language in an effort to distinguish the Suga-Gorsuch combination presented in the Petition. For example, claim 1 recites receiving an activation cue from "*a source external to said cellular phone*," not from a data exchange device. Regardless, as explained above regarding Limitations [1(c)] and [1(d)], Suga's W-LAN access point is an "*external data exchange device*" that transmits an "*activation cue*" in the form of a beacon signal. We decline to limit the independent claims to the narrower preferred embodiments urged by Patent Owner.

For the reasons given above, we determine the Petition establishes by a preponderance of the evidence that a POSITA would have had sufficient reason to incorporate Gorsuch's W-LAN detection circuit (a "*cue receiver*")

for receiving a beacon signal ("*activation cue*") from the W-LAN access point ("*a source external to said cell phone*") into Suga's cell phone circuitry with a reasonable expectation of success. Therefore, we determine the Petition establishes by a preponderance of the evidence that Suga-Gorsuch discloses Limitation [1(e)].

> **Limitation [1(f)]:** "*a data conveyance switching element operatively linked to said electronic circuit, said switching element being assigned a first state upon an activation cue having been received by said cue receiver, and being assigned a second state when no activation cue was received by said cue receiver*; and"

The Petition contends that Suga in combination with Gorsuch discloses Limitation [1(f)] because "[i]n this combination, the MPU 40 itself is a 'data conveyance switching element[.]'" Pet. 46–47 (citing Ex. 1004 ¶¶ 94–98). The Petition explains that the MPU "decides which transceiver is used for a data transmission and is responsible for routing the data to the selected transceiver." *Id.* Suga annotated Figure 5 is reproduced below from the Petition:

Settings Screen

During Transmission

[✓] Prioritize use of wireless LAN

_____ Conditions _____

[ ] When type of content is XXXX

[ ] When content volume exceeds XXXX

_____

[✓] Automatically switch to phone line if wireless LAN line cannot be used

During Reception

[✓] Prohibit reception of data over phone lines

Pet. 47 (citing Ex. 1005, Fig. 5 (annotated); Ex. 1004 ¶ 95). The Petition further explains that Suga's cell phone can be configured to prioritize W-LAN and to "automatically switch" to a cellular network when a W-LAN connection is unavailable, i.e., when no beacon frame ("*activation cue*") is received by the W-LAN detection circuit. *Id.* Thus, the Petition proposes a combination of Suga and Gorsuch where Gorsuch's W-LAN detection circuit is operatively connected to and under the control of Suga's MPU that acts as a "*data conveyance switching element*." *Id.*

Patent Owner contends that "[r]ather than relying on the state of the switching element of the '294 Patent, *Suga* relies on processing its priorities set in the graphical user interface." Resp. 38–39 (citing Ex. 1005 ¶¶ 47–52, Fig. 6; Ex. 2001 ¶¶ 95–96). Patent Owner further contends that "[i]f states were assigned, then the flowchart of Fig. 6 would not need to be run every time a transmission occurs." *Id.* at 39 (citing Ex. 1001, 19:23–28; Ex. 2001

¶ 97). Patent Owner's argument, however, does not undermine Petitioner's showing that, in the modified Suga-Gorsuch cell phone, the MPU is operatively connected to a W-LAN detection circuit and acts as a data conveyance switch depending on whether or not a beacon frame has been received from the W-LAN access point. As noted previously, Mr. Zaheer confirmed the correct operation of Suga's device according to Figure 6 such that the cell phone will "Automatically switch to phone line if wireless LAN cannot be used" when the appropriate device setting is checked. Ex. 1019, 46:12–48:18 (referencing Ex. 1005, Fig. 6).[11]

For the reasons given above, we determine the Petition establishes by a preponderance of the evidence that a POSITA would have had sufficient reason to incorporate Gorsuch's W-LAN detection circuit in Suga, operatively connected to and under the control of Suga's MPU to act as a "*data conveyance switching element*" when the appropriate device setting is checked, with a reasonable expectation of success. Therefore, we determine the Petition establishes by a preponderance of the evidence that Suga-Gorsuch discloses Limitation [1(f)].

> **Limitation [1(g)]:** "*power means for providing power to said portable electronic device cellular phone*;"

The Petition contends that Suga discloses Limitation [1(g)] because a "power supply 41 provides power to the components in the cell phone 1." Pet. 51 (citing Ex. 1005 ¶ 37, Fig. 2; Ex. 1004 ¶ 99).

Patent Owner does not address this limitation. Resp. 24–41.

---

[11] Patent Owner also reprises the unavailing arguments that Suga's W-LAN access point is "not an end device," "[n]o data is exchanged with the access point," and "[n]o external data exchange device is shown within network 106;" addressed above regarding Limitations [1(c)] and [1(d)]. Resp. 40.

For the reasons given in the Petition, we determine the Petition establishes by a preponderance of the evidence that Suga discloses Limitation [1(g)].

> **Limitation [1(h)(i)]:** "*wherein upon said control device being selectively triggered by the user to issue said invariable activation command:*
>
> *if said switching element is in said first state, a first data conveyance operation will be initiated through the instrumentality of said first data transceiver for sending data from said electronic circuit to the first external data exchange device over said first communication link*; and"
>
> **Limitation [1(h)(ii)]:** "*if said switching element is in said second state, a second data conveyance operation will be initiated through the instrumentality of said second data transceiver for sending data from said electronic circuit to the second external data exchange device over said second communication link.*"

The Petition contends that Suga in combination with Gorsuch discloses Limitations [1(h)(i)] and [1(h)(ii)]:

> The proposed *Suga-Gorsuch* combination uses the W-LAN detection circuit of *Gorsuch* to determine if W-LAN is available, allowing the cell phone of *Suga* to efficiently transmit data through W-LAN when available. If W-LAN is not available, the cellular network is used to transmit the user data (*e.g.*, the user's email).
>
> Specifically, a user inputs a command on the keyboard 39 of cell phone 1 to authorize sending an email, triggering an invariable activation command to be issued. The user selection to send the email is processed by MPU 40 (part of the "electronic circuit" in *Suga*), which initiates the sending of the email data to an external device via either the W-LAN line or wireless phone line.

Pet. 52–53 (citing Ex. 1004 ¶¶ 100–104) (internal citation omitted). The Petition further provides annotated versions of Suga Figure 2 to support its contention that the Suga-Gorsuch combination discloses Limitations

[1(h)(i)] and [1(h)(ii)]. Annotated Figure 2 reproduced below depicts a first data conveyance operation when a beacon signal is received:

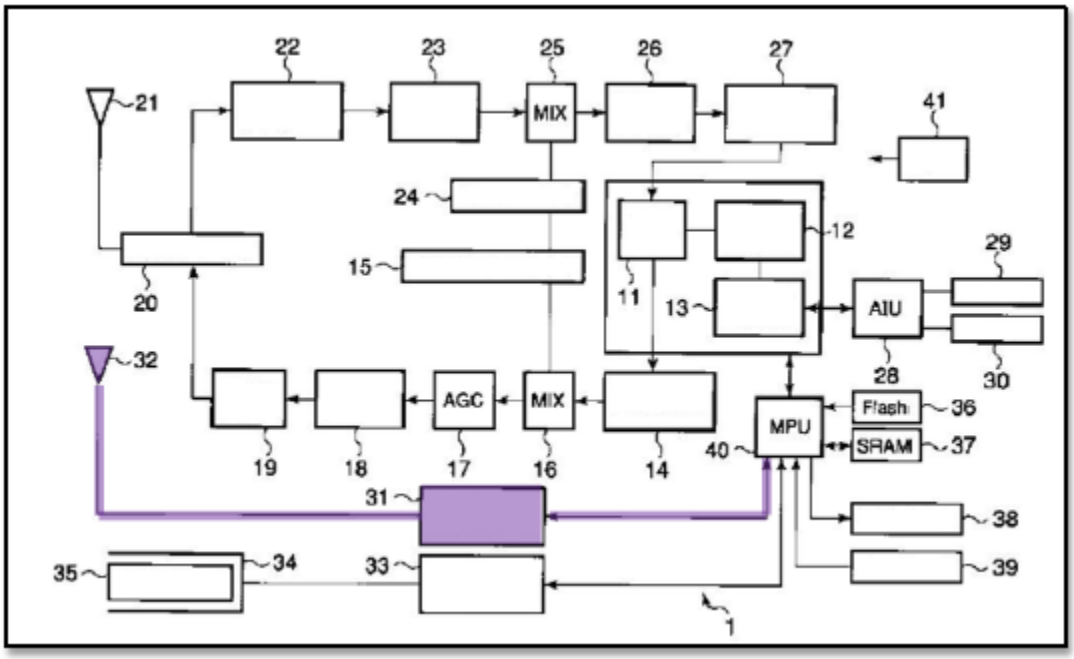

Id. at 53–54 (citing Ex. 1004 ¶ 102). We agree with Dr. Buehrer that "[i]n a first state where a beacon is detected, the MPU will perform communication through the W-LAN line by routing the data through the wireless LAN controller 31 and antenna 32" as illustrated above. Ex. 1004 ¶ 102.

Annotated Figure 2 reproduced below depicts a second data conveyance operation when a beacons signal is not received:

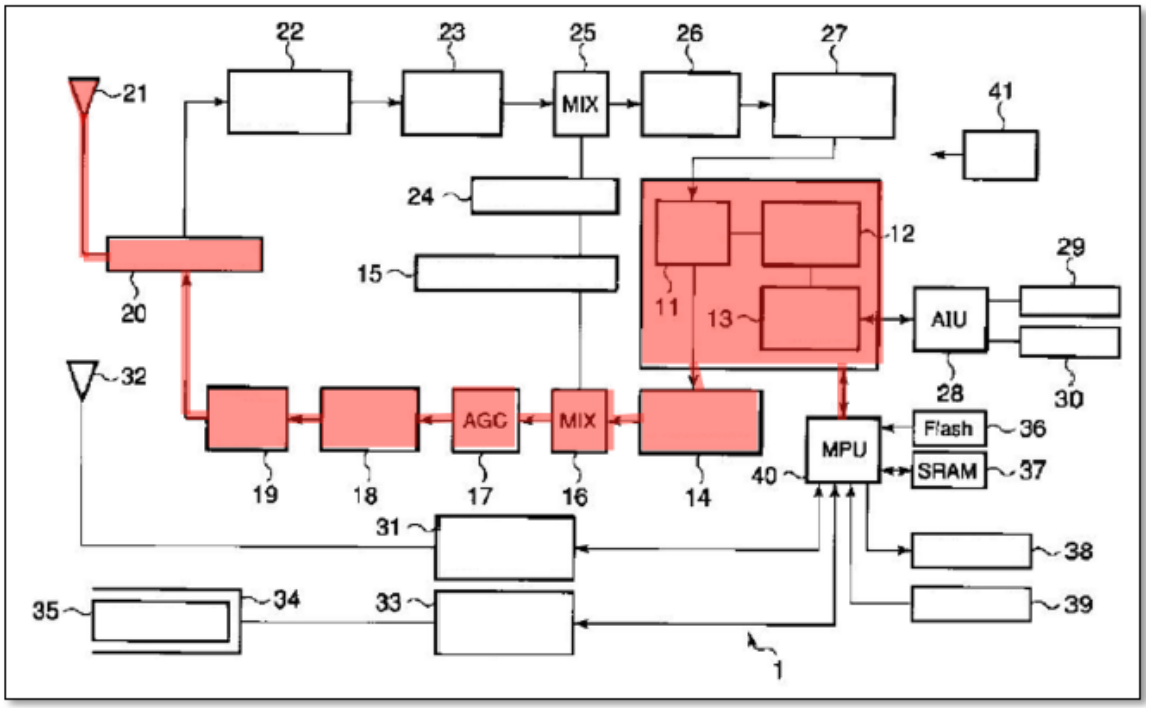

Pet. 54–55 (citing Ex. 1004 ¶¶ 102–103). We agree with Dr. Buehrer that "[i]f no beacon signal has been detected, the MPU 40 is in a second state and will send data through the wireless phone line by routing the data through the cellular transceiver" as shown above. Ex. 1004 ¶ 103. We are persuaded by the cited arguments and evidence in the Petition, including Dr. Buehrer's testimony regarding the two states of the Suga-Gorsuch switching element for conveying data over one of the two communication links—W-LAN or wireless phone network—depending on whether or not a beacon signal has been detected. We find the Petition's argument and Dr. Buehrer's testimony persuasive and consistent with the disclosures in Suga and Gorsuch.

Patent Owner generally invokes arguments previously made that the proposed Suga-Gorsuch combination does not disclose "the claim elements associated with an activation cue, invariable activation command, data

exchange device, and other elements as discussed above." Resp. 41 (citing Ex. 2001 ¶¶ 84–85, 89–101). We have addressed above why Patent Owner's arguments are unavailing in our discussion of Limitations [1(b)]–[(f)]. Therefore, for the reasons given above, we determine the Petition establishes by a preponderance of the evidence that Suga discloses Limitations [1(h)(i)] and [1(h)(ii)].

d. Conclusion for Claim 1

For the reasons given above, we determine the Petition establishes by a preponderance of the evidence that Suga in combination with Gorsuch discloses, teaches, suggests, or otherwise renders obvious independent claim 1 in the '294 patent.

4. Claims 2–20

The Petition contends that dependent claims 2—20 are also obvious over the combination of Suga and Gorsuch. Pet. 56–75 (citing Ex. 1004 ¶¶ 105–154). Patent Owner refers back to its arguments regarding claim 1 when addressing many of the claims and raises several additional arguments addressed to claims 7–9, 13, 14, and 16–18. Resp. 42–63. We address claims 2–20 below.

a. Claims 2–6

Claims 2–5 each depend directly from claim 1, and claim 6 depends from claim 5. The Petition establishes by a preponderance of the evidence that Suga-Gorsuch discloses the following:

> "*display screen*" (LCD panel) recited in claim 2;
>
> "*first data transceiver includes said cue receiver*" (Suga's W-LAN controller 31 includes Gorsuch's W-LAN detection circuit 201) recited in claim 3;
>
> "*control device is one of a manually activated button . . .*" (keyboard 39) recited in claim 4;

> "*electronic circuit includes said switching element*" (cell phone MPU 40) recited in claim 5; and
>
> "*microchip*" and "*switching element is a series of instructions programmed onto said microchip*" (programmed microchip MPU 40 and SRAM 37) recited in claim 6.

Pet. 56–59 (citing Ex. 1004 ¶¶ 105–110). Patent Owner responds by cross-referencing its arguments attempting to distinguish Suga-Gorsuch from claim 1 at least because the recited "*activation cue*" and "*switching element*" are not disclosed, without further elaboration, arguments we address above. Resp. 42–44 (citing Ex. 2001 ¶¶ 71–100, 102–116). For claim 4, Patent Owner adds that "no keyboard is in the control device list" (Resp. 42), but as the Petition persuasively establishes, a "POSITA would have understood that a keyboard consists of various keys, each a 'manually activated button'" as recited in claim 4. Pet. 58 (citing Ex. 1004 ¶ 108).

For the reasons given above, we determine the Petition establishes by a preponderance of the evidence that Suga in combination with Gorsuch discloses, teaches, suggests, or otherwise renders obvious claims 2–6 in the '294 patent.

b. Claim 7

Claim 7 depends from claim 1 and recites "*wherein said switching element comprises a logical circuit*." As discussed above in our construction of the "*data conveyance switching element*," the '294 patent describes the switching element as "any type of device allowing data to be conveyed according to alternate data conveyance operations." Ex. 1001, 9:28–31. The '294 patent then provides examples of the switching element such as "a series of instructions programmed onto the microchip", a "decisional logical circuit", or "a physical structure, a virtual program, or both." *Id.* at 9:33–41. The Petition contends that a "POSITA would have

understood that a processor such as MPU 40 consists of multiple logical circuits to run logical operations . . . [and] that a software switch executed by a MPU 40 comprises a logical circuit." Pet 60. (citing Ex. 1004 ¶ 111). We agree with Petitioner.

Patent Owner responds by emphasizing Suga's disclosure that:

> [T]he MPU 40 executes in the SRAM 37 a control program that realizes the line switching controls of the present embodiment and that controls switching between the circuit for phone line connections and the wireless LAN controller 31 for wireless LAN line connections.

Resp. 44 (citing Ex. 1005 ¶ 37; Ex. 2001 ¶ 119). However, neither Patent Owner nor Mr. Zaheer directly addresses the contentions in the Petition that a processor, such as Suga's MPU 40, consists of multiple logical circuits and that a software switch executed by the processor comprises a logical circuit. Mr. Zaheer testifies as follows regarding Suga Figure 2:

> Furthermore, Fig. 2 of *Suga* shows that [] the MPU 40 has *no logical circuit between the cellular transceiver and the W-LAN transceiver*. A POSITA understands that an MPU is a processor that executes firmware to operate and enables it to execute higher-level software. *There is a difference between a logic circuit acting as a switch and an MPU executing software, which serves as a switching unit*. It is the higher-level software that is programmed to perform the switching function, i.e., switching element. In the current claim, the Petitioner is now using the same element and trying to argue that the firmware and circuits that the MPU operates on are the switching elements. If such an interpretation is used, then there is no difference between the claim element of claims 6 and 7.

Ex. 2001 ¶ 120 (emphasis added); Resp. 44–45. Patent Owner's argument and Mr. Zaheer's testimony are not consistent with the '294 patent. The language recited in claim 7 and the relevant description in the '294 patent specification do not require the recited logical circuit to be separate or

different from a processor executing software, although a separate decisional logic circuit may be used. *See* Ex. 1001, 9:40–41 ("[the] switching element can be a physical structure, a virtual program, or both"). In short, Patent Owner's argument for claim 7 is not responsive to the contentions in the Petition or consistent with the relevant description in the '294 patent.

For the reasons given above, we determine the Petition establishes by a preponderance of the evidence that Suga in combination with Gorsuch discloses, teaches, suggests, or otherwise renders obvious dependent claim 7 in the '294 patent.

c. Claims 8 and 16

Claim 8 depends from claim 1 and claim 16 depends from claim 12. Claims 8 and 16 both recite exchanging data with a first external data exchange device "*through a <u>direct link</u> representing said first communication link where the cellular phone is conveyed toward a <u>close proximity</u> of the first external data exchange device and within a range to receive the activation cue to initiate the wireless data exchange*." The Petition contends that *Suga* in combination with *Gorsuch* teaches the recited limitations in claims 8 and 16. Pet. 60–61 (citing Ex. 1004 ¶¶ 112–113), 73.

For claim 16, the Petition cross-references claim 5 rather than claim 8. Pet. 73. The cross-reference to claim 5 is an obvious typographical error given the identity of the disputed claim language recited in both claims 16 and 8 and the dissimilarity of claim language recited in claims 16 and 5. Regardless, Patent Owner's protest, that for claim 16 the "Petition <u>only</u> cites claim 5," is unpersuasive because Patent Owner had notice of the Petition's argument advanced for the identical claim language in claim 8, to which Patent Owner responded. Resp. 45–49, 59 (citing Ex. 2001 ¶¶ 71–100, 122–131, 184). Patent Owner had a further opportunity to respond to claim

16 in its Sur-Reply and did not protest further after Petitioner corrected the cross-reference to claim 8 in the Reply. Reply 23 n.3; Sur-Reply 1–6; *see In re Magnum Oil Tools Int'l, Ltd.*, 829 F.3d at 1381, ("[T]he Board must base its decision on arguments that were advanced by a party, and to which the opposing party was given a chance to respond.").[12]

The Petition contends a POSITA would have known that Suga's W-LAN access point "operate[s] with limited range." Pet. 60–61 (citing Ex. 1004 ¶ 112). The Petition explains that in Gorsuch:

> W-LAN hubs have regions of coverage 613, that are "generally of the order of tens or hundreds of feet, which is significantly smaller than the cells 601, 603 associated with [a cellular network]." Thus, a user device must be in proximity to the W-LAN hub, *i.e.*, within the coverage region 613 shown in annotated Fig. 5, below, to receive a beacon frame and subsequently transmit data with a W-LAN hub 611.

[12] The same analysis applies to the Petition's cross-reference error for claim 17. Resp. 59; Reply 23 n.3 ("cross reference for Claim 17 should be Claim 9, rather than Claim 6").

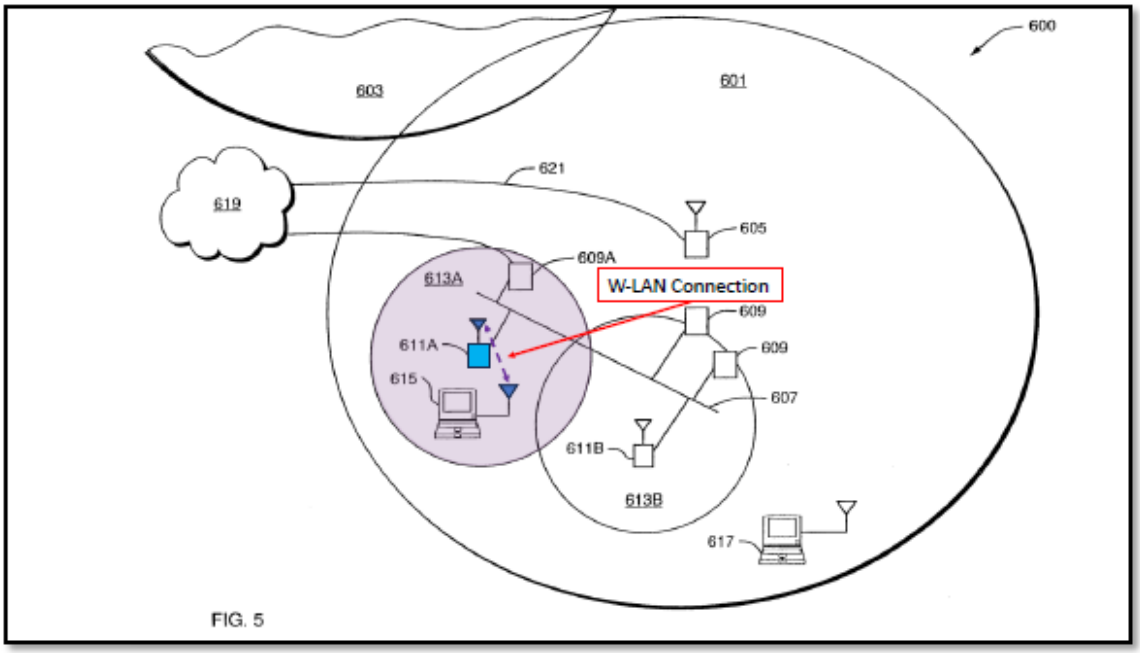

Id. at 61 (citing Ex. 1004 ¶¶ 112–113; Ex. 1006, 12:23–32, Fig. 5). The Petition concludes that a "POSITA would have understood that the access point 6 in the *Suga-Gorsuch* combination would have a similarly limited range. *Id.* at 61 (citing Ex. 1004 ¶ 113). We agree with Petitioner.

Patent Owner argues that a "*direct link*" refers to a node-to-node connection without involving any network infrastructure. Resp. 45–47 (citing Ex. 1001, 13:33–41, 14:27–37; Ex. 2001 ¶¶ 122–127). Patent Owner then characterizes data communication between Suga's cell phone and the W-LAN access point as a communication to establish a network connection, which Patent Owner contends is "not a direct link." *Id.* We disagree because Patent Owner is reading unrecited preferred embodiment limitations into the claim language "*direct link*."

For example, Patent Owner cites to the '294 patent specification and argues "there is a difference between direct linked devices and a connection to a network." Resp. 46–47 (citing Ex. 1001, 13:33–41, 14:27–37; Ex. 2001

¶¶ 124–125). The cited embodiments, however, are exemplary, and neither the claim language nor the cited description excludes a direct data exchange between a cell phone and network access point as taught by Suga-Gorsuch. We agree with Petitioner and Dr. Buehrer that Patent Owner improperly imports preferred embodiment limitations into broader claim language. Reply 23–24 (citing Ex. 1021 ¶¶ 11–14). A direct link does not prohibit the directly linked device from being part of a broader network, as Patent Owner's argument implies. *See* Resp. 45 ("node-to-node communication without going through a network"), 47 ("*Suga* or *Gorsuch's* access points are network infrastructure devices"); Sur-Reply 5–6 ("A POSITA would have known an access point would be part of the network 106, and not the devices being communicated with 108, 110, 109, 104, and 112."). Mr. Zaheer similarly relies on an IEEE Wi-Fi communication protocol to distinguish Suga-Gorsuch from an implied claim limitation that would require a direct node-to-node communication "which does not occur over a communication network." Ex. 2001 ¶¶ 126–127.

As claimed, a direct communication link between the cell phone's first data transceiver and the first external data exchange device is established when the two devices are in close proximity and within range for the cell phone to receive an activation cue and initiate a wireless data exchange. Thus, a "*direct link*" in the context of the '294 patent specification "distinguishes the short range, single-hop connection between the portable device and a first external data exchange device from communication with a 'remote' second device that requires multiple network hops," nothing more. Ex. 1021 ¶ 12 (citing Ex. 1001, 13:12–24 (explaining that data may be conveyed "through a direct link" to an external data exchange device, contrasted with conveying data to a "remote" second

external device)). A direct communication link, therefore, must connect the mobile phone to a proximate data exchange device as "a single-hop communication with no intervening communication infrastructure," i.e. without *intervening* devices or infrastructure. Reply 23–24 (citing Ex. 1021 ¶ 13). We find the Suga-Gorsuch combination teaches a direct communication link between the cellular phone and W-LAN access point. Suga's cellular phone connects to the W-LAN access point via a short-range, direct link over which data is exchanged without intermediary routing hardware. Reply 24 (citing Ex. 1004 ¶ 86; Ex. 1021 ¶¶ 11–14).

In short, the '294 patent does not exclude a direct data exchange between a cellular phone and W-LAN network access point as taught by Suga-Gorsuch.

Patent Owner also reprises the claim construction argument that "close proximity" means "allows data transmission within a limited range, such as within several meters for example" or even "one meter or less." Resp. 48 (citing Ex. 1001, 15:55–57; Ex. 2001 ¶¶ 49, 128). Patent Owner further argues that a direct linked device must be closer than the range of coverage in a wireless network "to allow one device to connect directly with another." *Id.* (citing Ex. 2001 ¶¶ 124–128, 130). Patent Owner's argument is premised on Patent Owner's incorrect construction of "*close proximity*" and fails for the same reasons articulated above in our claim construction of "*close proximity*."

For the reasons given above, we determine the Petition establishes by a preponderance of the evidence that Suga in combination with Gorsuch discloses, teaches, suggests, or otherwise renders obvious claims 8 and 16 in the '294 patent.

d. Claims 9–12, 15, and 17–19

Claim 9 depends from claim 8 and recites "*wherein said second data transceiver comprises a communication network transceiver for wireless communication* . . . ." The Petition establishes by a preponderance of the evidence that Suga-Gorsuch discloses the recited network transceiver for wireless cellular communication. Pet. 62–63 (citing Ex. 1004 ¶ 114; Ex. 1005 ¶ 16, Fig. 1, claim [1(d)]; Ex. 1006, Fig. 5). Patent Owner responds by cross-referencing its arguments attempting to distinguish Suga-Gorsuch from claims 1 and 8 at least because the recited "*activation cue*" and "*switching element*" are not disclosed, without further elaboration, arguments we address above. Resp. 49 (citing Ex. 2001 ¶¶ 71–100, 122–134).

For independent claims 10–12, the Petition establishes by a preponderance of the evidence that Suga-Gorsuch discloses the recited limitations, primarily by cross-referencing its arguments and evidence set forth in claim 1, addressed above, and citing additional evidence and articulating additional arguments where necessary, such as for limitations [10(c)], [11(Pre)], [11(a), (b)] and [12(a)]. Pet. 63–69 (citing Ex. 1004 ¶¶ 119, 125, 138; Ex. 1005 ¶¶ 18, 22, 35, 37, Fig. 1; Ex. 1006, 13:14–22, 13:28–32). Patent Owner responds by cross-referencing its arguments attempting to distinguish Suga-Gorsuch from claim 1, claims 1 and 8 ([11c.iii]), and claims 1, 8, and 9 ([11.c.iv]) without further elaboration, arguments we address above. Resp. 49–54 (citing Ex. 2001 ¶¶ 71–100, 124–131, 135–165).

Claim 15 depends from claim 12 and recites "*wherein said first and second data are identical*." The Petition establishes by a preponderance of the evidence that Suga-Gorsuch discloses the recited identical data as an

email. Pet. 73 (citing Ex. 1004 ¶ 147; Claims [1(h)], [12(d)]). Patent Owner responds by cross-referencing its arguments attempting to distinguish Suga-Gorsuch from claim 12 and therefore from claim 1 without further elaboration, arguments we address above. Resp. 58 (citing Ex. 2001 ¶¶ 158–165, 179–181).

Claim 17 depends from claim 12 and recites "*wherein . . . the step of forwarding said second data to said second data transceiver is for initiating a wireless data conveyance operation . . . .*" The Petition establishes by a preponderance of the evidence that Suga-Gorsuch discloses the recited second data for initiating a wireless data conveyance operation, cross-referencing its analysis of claim 9 that recites nearly identical language to claim 17. Pet. 62–63, 73 (citing Ex. 1004 ¶ 114; Ex. 1005 ¶ 16; Ex. 1006, Fig. 5); Reply 23 n.3 (correcting typographical error in Petition to cross-reference claim 9 instead of claim 6). Patent Owner responds by noting the "Petition <u>only</u> cites claim 6" and makes the conclusory assertion that "the elements of claim 12 are not disclosed in the combination of *Suga* and *Gorsuch*," including a "direct link" and "close proximity of the first external data exchange device," without further elaboration, arguments we address above. Resp. 59–60 (citing Ex. 2001 ¶¶ 158–165, 186–189). Patent Owner had the further opportunity to respond to Petitioner's correction of the typographical error in its Sur-Reply, but did not. Sur-Reply 1–6.

Claim 18 depends from claim 12 and recites "*wherein the step of selectively triggering said control device . . . comprises selectively triggering one of the manually activated button, the keypad for receiving a PIN code, the biometric parameter detector and a combination thereof.*" Claim 18 is very similar to claim 4. The Petition cross-references its argument and evidence for claim 4 to establish by a preponderance of the evidence that

Suga discloses selectively triggering the control device by pressing a manually activated button (keyboard 39) as recited in claim 18. Pet. 58, 74 (citing Ex. 1004 ¶ 108). Patent Owner responds by noting the "Petition only cites claim 4" and makes the conclusory assertion that "the elements of claim 12 are not disclosed in the *Suga and Gorsuch* references" including a "direct link" and "close proximity of the first external data exchange device," without further elaboration, arguments we address above. Resp. 60 (citing Ex. 2001 ¶¶ 158–165, 190–193). We note that for independent claim 12, the Petition cross-references its extensive arguments for claim 1 and specifically argues with supporting evidence that Suga-Gorsuch discloses limitation [12(a)], to which Patent Owner does not respond. Pet. 68–69 (citing Ex. 1004 ¶ 138; Ex. 1006, 13:14–22, 13:28–32); Resp. 60.

Independent claim 19 recites a "*method for data conveyance with a cellular phone of the type comprising: . . .* ," and claim 20 depends from claim 19 and recites "*wherein said control device includes said user confirmation input device*." For independent claim 19, the Petition establishes by a preponderance of the evidence that Suga-Gorsuch discloses the recited limitations by cross-referencing its arguments and evidence set forth in claims 1 and 12–15, addressed above. Pet. 74–76. The Petition cites additional evidence and articulates additional argument for limitation [19(e)(i), (e)(ii)]. *Id.* at 75–76 (citing Ex. 1004 ¶ 154). Patent Owner responds by cross-referencing its arguments attempting to distinguish Suga-Gorsuch from claims 1 and 12 including the "*electronic circuit capable of storing data therein*," "*activation cue*," "*direct link*," and "*external data exchange device*" without further elaboration, arguments we address above. Resp. 60–63 (citing Ex. 2001 ¶¶ 71–101, 158–165, 167, 174, 194–206).

For the reasons given above, we determine the Petition establishes by a preponderance of the evidence that Suga in combination with Gorsuch discloses, teaches, suggests, or otherwise renders obvious claims 9–12, 15, and 17–19 in the '294 patent.

e. Clams 13, 14, and 20

Claim 13 depends from claim 12 and recites "*before the step of forwarding first data to said first data transceiver for initiating a data exchange operation with a first external data exchange device:*

> *forwarding third data to and displaying said third data on a display screen provided on said cellular phone, wherein said third data is representative of the content of said first data*."

The Petition explains that Suga teaches displaying data on the cell phone's LCD screen, although "*Suga* does not describe what is displayed on the LCD panel 38 in the process of sending an email." Pet. 69 (citing Ex. 1005 ¶¶ 51–52 ("transmission failure message is displayed on the LCD panel 38"). The Petition argues:

> [A] POSITA would have interpreted *Suga* to suggest displaying the email prior to sending. Indeed, it was well known in the art that an email would be displayed on the screen of a cell phone and provide a user the option to send the email.

Id. at 69–70 (citing Ex. 1004 ¶ 142). The Petition provides an example from a 2007 prior art reference to Wilson (Ex. 1010) to establish it was well known in the art to display an email on a cell phone screen with a confirmation message for a user to confirm (or not) a command to send an email before the email is actually sent. *Id.* at 69–71 (citing Ex. 1004 ¶¶ 142–144; Ex. 1010, ¶¶ 2–3, Figs. 4, 5). An annotated version of Wilson Figure 5 highlighting the displayed email confirmation message is reproduced below:

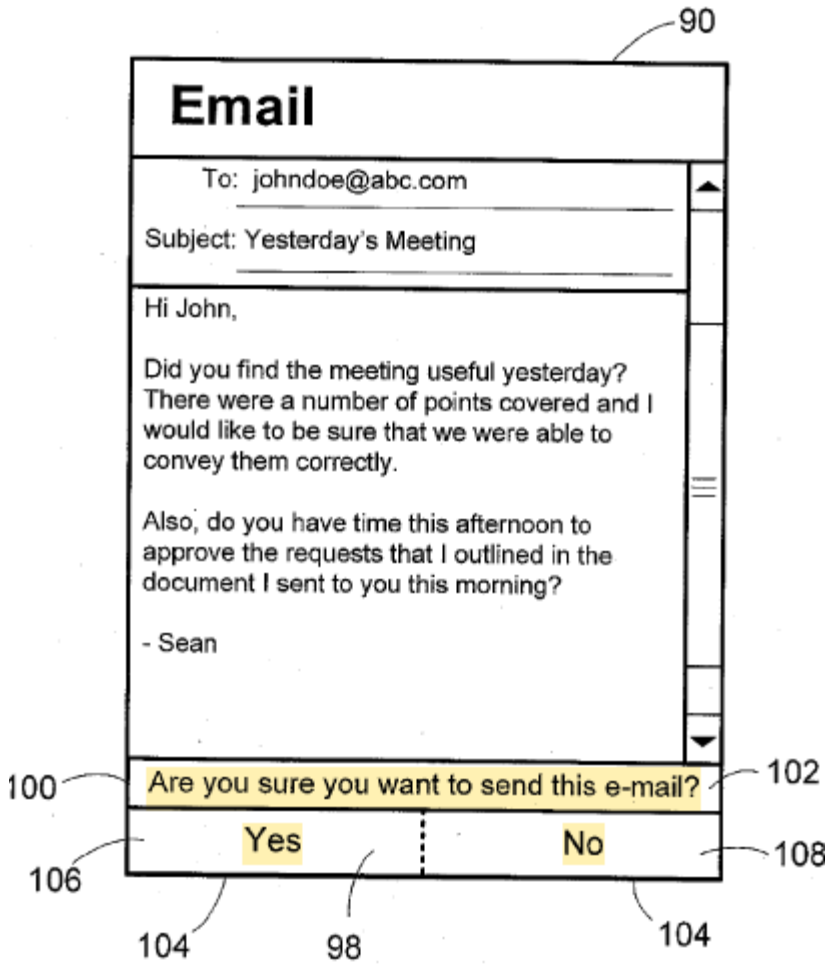

Id. at 71. In Wilson Figure 5 (annotated), above, a displayed confirmation message appears below the email with a text box for a user to indicate whether to send the email—"Yes"—or not—"No." Ex. 1010 ¶¶ 32–38.

We agree with Dr. Buehrer's explanation of Wilson Figure 5:

> In many mobile email systems, once the user commands the cell phone to send the email, another option will be presented on the screen to the user. The use of these confirmation boxes/dialog is *intended to prevent the accidental transmission of emails that is possible with a single click send*. For example, after a user issues a command to send an email, a confirmation will appear on screen. Ex. 1010, [0002]-[0003], Fig. 5 (recognizing that after certain actions, like sending an email, *a confirmation message will appear on the screen requiring an additional confirmation to send the email*).

Ex. 1004 ¶ 143 (emphases added) (also citing Ex. 1013 ("*Sorotzkin*"), 1:16–32, 1:41–54 ("permits users of . . . email systems . . . to confirm the specification of addressing information (e.g., email addresses) prior to transmission of their messages"); Ex. 1014 ("*Meister*"), 1:15–2:3 ("a system that will alert a user when an unauthorized e-mail is being sent by the user's system and allow the user to cancel the message before it is sent")). Dr. Buehrer further explains that a "POSITA would have understood that the MPU 40 would 'forward[] third data to' the LCD panel 38 so that the data would be presented" in the form of a confirmation message representative of the "*first data*," i.e., a confirmation of the drafted email message. *Id.* Dr. Buehrer then states:

> This step occurs prior to the "step of forwarding first data to said first data transceiver for initiating a data exchange operation with a first external data exchange device" as a confirmation message requires an affirmative action from a user before the cell phone will attempt to send the email.

Ex. 1004 ¶ 144. We find Dr. Buehrer's quoted testimony to be consistent with the email process disclosed in Suga, the cited disclosures in Wilson, Sorotzkin, and Meister, and the skill level of a POSITA having an electrical engineering or computer science degree and at least two years of experience with wireless communication devices and networks.

In response, Patent Owner cross-references its arguments regarding claim 12. Resp. 54–55 (citing Ex. 2001 ¶¶ 158–166). Patent Owner also repeats the argument that a "POSITA would understand network hardware, such as an access point or base station, which is part of network 106" is not an external data exchange device, because the "claim element requires 'initiating a data exchange operation with a first external data exchange device,[']not a network infrastructure device that simply routes the data to

the first external data exchange device." *Id.* at 55 (citing Ex. 1001, Fig. 3; Ex. 2001 ¶ 168). Neither Patent Owner nor Mr. Zaheer respond to the evidence cited by Petitioner, particularly Figures 4 and 5 of Wilson and Dr. Buehrer's persuasive testimony explaining how Suga's email system would work in view of the common knowledge in the art. We have addressed Patent Owner's arguments regarding claims 1 and 12 and the "network hardware" argument above.

For the reasons given above, we determine the Petition establishes by a preponderance of the evidence that Suga in combination with Gorsuch discloses, teaches, suggests, or otherwise renders obvious claim 13 in the '294 patent.

Claim 14 depends from claim 13 and recites "*wherein after the step of forwarding said third data to the display screen, the method comprises the* following step:

> *awaiting for an* <u>*authorization command*</u> *to be inputted through a* <u>*user confirmation input*</u> *device provided on said cellular phone before forwarding said first data to said first data transceiver*."

The dispute between the parties is whether claim 14 requires a "security authorization" such as entering a PIN in order to transmit data (e.g., to send an email), as urged by Patent Owner (Resp. 55–58 (citing Ex. 2001 ¶¶ 158–165, 167–178)), or whether a simple user confirmation to authorize sending an email, such as taught by the Wilson reference, is sufficient as argued by Petitioner. Pet. 72–73 (citing Ex. 1004 ¶¶ 145–146; Ex. 1010 ¶¶ 32–37, Figs. 4, 5); Reply 17–18 (citing Ex. 1004 ¶¶145–146; Ex. 1019, 57:15–59:25). The Petition asserts that when a user of the Suga-Gorsuch cell phone hits the email send button, a POSITA would have known

the device would be "waiting for the user to confirm they want to send the email," i.e., "*awaiting for an authorization command*, as claimed" because such email confirmation was well known in the art. Pet. 72 (citing Ex. 1004 ¶ 145; Ex. 1010 ¶¶ 32–37, Figs. 4, 5)). Patent Owner responds that "[a]uthorization is a security approach that requires the input of security data, as discussed in the '294 Patent." Resp. 57 (citing Ex. 1001, 15:14–18). We agree with Petitioner.

The flaw in Patent Owner's argument is that it imports a "security data" requirement that is not recited in or required by claim 14. Reply 17–18. For example, claim 4 recites that a user-triggered control device can be "*a keypad for receiving a PIN code*," or "*a biometric parameter detector*" e.g., a fingerprint scanner, as security input data to validate a user. Ex. 1001, 8:36–50, 19:50–53. Claim 14 does not recite a biometric parameter detector, a keypad for receiving a PIN code, or other device to validate a user. *Id.*

As discussed above for claim 1, independent claim 12 recites a user selectively triggering the control device to issue an invariable activation command that initiates a first data conveyance operation by forwarding first data to the first data transceiver, if an activation cue has been received. Dependent claim 13 recites displaying third data representative of the first data on a display screen <u>before</u> forwarding the first data to the first data transceiver. Claim 14 recites an additional step: after the third data is displayed on the screen but <u>before</u> forwarding the first data, "*awaiting for an authorization command to be inputted through a user confirmation input device*"—not awaiting a security verification or validation command such as entering a PIN. *See* Ex. 1001, 8:43–50 ("control device 12 could include validation means in the form of a keypad allowing the portable electronic device holder to type in a personal identification number (PIN)").

The structure of claim 14 indicates that, before forwarding the first data to the first data transceiver on the cell phone for communication with the first external data exchange device, the user must input a command to confirm forwarding the data. "This input device may be [the] control device, or it may be another input device entirely such as for example a command on a touch screen (display screen) or any other suitable input device." Ex. 1001, 15:46–49. The Wilson reference discloses just such a touch screen confirmation command to authorize sending an email, as depicted in Figure 5 shown above in our discussion of claim 13.

Wilson states:

> The confirmation module 68 then creates a confirmation bar 100 which displays a confirmation message 102. In this example, the confirmation message 102 is "Are you sure you want to send this e-mail?". . . .
>
> For example, the user may confirm the action by selecting the first response, namely the updated soft key icon associated with confirmation. In this example embodiment, the user would confirm that they want to send the e-mail message by pressing the left soft key button 80 which is associated with the left updated soft key icon 106 (Yes). . . .
>
> Alternatively, if the user does not wish to confirm the action, but would rather abandon the action, the user may select the second response, namely the right soft key button 82 which is associated with the right updated soft key icon 108 (No).

Ex. 1010 ¶¶ 34, 37, 38. Wilson, Sorotzkin, and Meister, along with the testimony of both experts, provide a clear evidentiary basis for our finding that it was common knowledge at the time the '294 patent application was filed in October 2009 for a cell phone user to input a confirmation command before sending an email. *Id.*; Ex. 1004 ¶¶ 145–146; Ex. 1013, 1:16–32, 1:41–54; Ex. 1014, 1:15–2:3; Ex. 1019, 59:12–25 (Mr. Zaheer agreeing it

was well known to ask a user to confirm before sending an email); *see Randall Mfg. v. Rea*, 733 F.3d at 1362 (reversing Board non-obviousness determination for "fail[ing] to account for critical background information that could easily explain why an ordinarily skilled artisan would have been motivated to combine or modify the cited references to arrive at the claimed inventions"). Our finding of common knowledge underpins our determination that the Petition establishes the Suga-Gorsuch combination renders claim 14 obvious.

For the reasons given above, we determine the Petition establishes by a preponderance of the evidence that Suga in combination with Gorsuch discloses, teaches, suggests, or otherwise renders obvious claim 14 in the '294 patent.

For independent claim 20, the Petition cross-references its argument and evidence for claim 14. Pet. 76. In response, Patent Owner cross-references its argument and evidence for claims 14 and 19. Resp. 63 (citing Ex. 2001 ¶¶ 169–178, 194–209). We have addressed Patent Owner's arguments above.

For the reasons given above, we determine the Petition establishes by a preponderance of the evidence that Suga in combination with Gorsuch discloses, teaches, suggests, or otherwise renders obvious claim 20 in the '294 patent.

III. MOTION TO EXCLUDE

Patent Owner moves to exclude: (i) Petitioner's Petition (Paper 1); (ii) Petitioner's Reply (Paper 18); (iii) Dr. Buehrer's Expert Declaration (Exhibit 1004); (iv) Exhibit 1005 and Exhibit 1017 (Japanese Patent No. 2003110751 to Suga ("Suga Exhibits"); (v) Dr. Buehrer's Expert Reply

Declaration (Exhibit 1021); and (vi) Exhibit 1022 (McGraw-Hill Telecom Dictionary). Mot. 1.

We deny Patent Owner's Motion to exclude (vi)—Exhibit 1022—because we do not rely on Exhibit 1022 in support of this Final Written Decision. We do not cite Exhibit 1022 as support for any finding or determination we make in this Final Written Decision. We do not rely on Dr. Buehrer's rebuttal declaration testimony in Exhibit 1021 regarding Exhibit 1022. Mot. Opp. 10–11 (citing Ex. 1021 ¶ 8 (referencing technical definition of "node" in Ex. 1022)). Therefore, Patent Owner's Motion to exclude Exhibit 1022 is denied as moot.

We also deny Patent Owner's Motion to exclude (i)–(v), which is based on the faulty and unsupported proposition that the Translation Certification filed with Exhibit 1017 does not comply with 37 C.F.R. § 42.63(b). Mot. 1–7; Mot. Opp. 2–6; Mot. Reply 3–6. The Suga reference is a Japanese language patent publication (2003–110751) published on April 11, 2003. Ex. 1005, 1, 20–28. Petitioner commissioned a translation of Suga into the English language and filed a Translation Certification with Suga Exhibit 1005 signed by a project manager at the translation service where Suga was translated. Ex. 1005, 20. The Certification Translation in Ex. 1005 was filed with the Petition on December 3, 2024. In our Institution Decision, we determined the Translation Certification to be non-compliant with 37 C.F.R § 42.63(b) solely because the translation project manager executed the Translation Certification in an improper form, i.e., without a notarized affidavit or sworn declaration pursuant to 18 U.S. C. § 1001. Paper 8, 18 n.6 (PTAB June 25, 2025). We ordered Petitioner to file a translation affidavit or sworn declaration compliant with 37 C.F.R. §§ 1.68 and 42.63(b) within 10 business days. *Id.*

On July 2, 2025, Petitioner complied with our order and filed a Translation Certification executed subject to the penalty of perjury warning under 18 U.S.C. § 1001 in accordance with 37 C.F.R. § 42.63(b). Exhibit 1017, 20. The Translation Certification filed with Suga Exhibit 1017 is executed by Mr. Frank McGee, the translator who translated Suga into the English language. *Id.* At the oral hearing, Counsel for Petitioner confirmed the English language translation of Suga in Exhibit 1017 is identical to the English language translation in Exhibit 1005 and that the only difference is the Translation Certification on page 20 of Exhibit 1017, which is executed under penalty of perjury by Mr. McGee who translated the Suga reference. Tr. 14:1–15:6.

Patent Owner does not challenge:

(i) the substance or accuracy of the English language translation of Suga;
(ii) the fact that Exhibits 1005 an 1017 include the identical English language translation of Suga;
(iii) the fact that Exhibit 1005 was filed with a Translation Certification on December 3, 2024, the same date the Petition was filed;
(iv) the fact that the translator's sworn declaration on page 20 of Exhibit 17 is in accordance with 37 C.F.R. §§ 42.63(b), 1.68, and 18 U.S.C. § 1001;
(v) Petitioner's compliance with our Institution Decision order; or
(vi) the statement by Counsel for Petitioner that Counsel for Patent Owner did not seek to depose the project manager or translator during this proceeding.[13]

Mot. 1–7; Mot. Opp. 1–5; Tr. 15:4–9, 31:5–21. As Petitioner's opposition makes clear, the Board has allowed a translation affidavit to be submitted

[13] Patent Owner did not file a deposition transcript of the translator (Mr. McGee) or the project manager (Mr. Raia) in this proceeding.

after a petition was filed <u>without any affidavit</u> certifying the English language translation. Mot. Opp. 4 (citing *Norman Int'l v. Andrew J. Testamentary Trust*, IPR2014-00283, Paper 52, 13–14 (PTAB June 18, 2015) (ordering petitioner to file a new, compliant affidavit after oral argument) (*compare* Ex. 1002 *with* Ex. 1021)); *Volkswagen Group of America, INC. v. Emerachem Holdings, LLC*, IPR2014-01555, Paper 20, 4–7 (PTAB Mar. 16, 2015) (Petitioner authorized to file exhibits with translator's affidavit when initial translation was not filed with an affidavit) ("Procedural 'side shows' not affecting the merits, such as a patent owner's disagreement prior to the time a preliminary response is due over improperly verified translations result in unnecessary expenses on the part of the parties and burden the Board.") (McKelvey, J.).

Patent Owner is left with the following empty, unsupported, conclusory arguments:

1. A new affidavit filed after institution establishes that the Board improperly instituted an IPR having a single ground based on an unsubstantiated non-prior art reference. Mot. 2–3;
2. Also, another problem presented by the replacement affidavit filed by an individual other than Andrew Raia [Ex. 1005, 20] is considered new matter in the IPR proceeding introduced <u>after</u> the filing of the Petition. *Id.* at 3;
3. The fact that the translation with the replacement affidavit, Exhibit 1017, does not reference Exhibit 1005 further supports that Exhibit 1005, relied on by the Board in its institution decision (paper 44), is improperly relied upon, unsubstantiated prior art. There is no evidence in the IPR that Exhibit 1005 is prior art because it fails to comply with 37 C.F.R. § 42.63. *Id.*;
4. Unlike *Hengdian*, the issue before this Board is that the *Suga* reference included a certificate signed by someone who could

not testify that it was an accurate translation. *Id.* at 5; and

5. According to the original affidavit relied upon by the Board institution of the IPR, Mr. Andrew Raia did not have personal knowledge of the translation's accuracy; he only stated that "[t]o the best of my knowledge." *See* Exhibit 1005, p. 20. *Id.* at 6.

For arguments 1 and 2 above, Patent Owner fails to cite any statutory authority or case law in support.

For arguments 1–3 and 5 above, Patent Owner cites Rule 42.63 in support of its Motion to exclude the Petition, Reply, Dr. Buehrer's testimony, and the Suga Exhibits. Mot. 3, 6.

First, Petitioner filed a Translation Certification for the English language translation of Suga (Exhibit 1005) executed by Mr. Raia, the project manager for the translation, attesting that "[t]o the best of my knowledge, the aforementioned documents are a true, full and accurate translation of the specified documents." Ex. 1005, 20. The only non-compliance was the absence of a notarized "affidavit" or declaration making the attestation subject to the penalty of perjury warning pursuant to 18 U.S.C. § 1001. Nothing in our governing statute or Rule 42.63 prevents us from allowing Petitioner to file a compliant affidavit after the initial filing with the Petition, in accordance with our institution order. Paper 8, 18 n.6.

Second, our institution order permitting Petitioner to file a new Translation Certification is within our statutory authority pursuant to 35 U.S.C. § 316(a)(3)—"establishing procedures for the submission of supplemental information after the petition is filed"—and § 316(b)—"In prescribing regulations under this section, the Director shall consider the effect of any such regulation on . . . the integrity of the patent system." Our institution order is also within our regulatory authority. *See, e.g.*, 37 C.F.R.

§§ 42.5(a) ("The Board . . . may enter non-final orders to administer the proceeding"), 42.5(b) ("The Board may waive . . . a requirement of parts 1, 41, and 42 and may place conditions on the waiver or suspension."), 42.5(c)(1) ("Times set by rule are default and may be modified by order."), 42.5(c)(3) ("A late action will be excused on a showing of good cause or upon a Board decision that consideration on the merits would be in the interests of justice."),[14] 42.6(c) ("**Exhibits**. Each exhibit must be filed with the first document in which it is cited except as the Board may otherwise order."), 42.123(a) ("Motion to submit supplemental information. . . . (2) The supplemental information must be relevant to a claim for which the trial has been instituted."). Patent Owner's Motion does not cite any contrary authority.

In the *Hengdian* decision cited by Patent Owner (Mot. 4–5), the Board authorized petitioners to file compliant translation affidavits after English language translations of two prior art references were filed with translation certificates in improper form, i.e., without the "affidavit" required under Rule 42.63(b). *Hengdian Group DMEGC Magn. Co. v. Hitachi Metals, Ltd.*, IPR2017-01312, Paper 14, 2 (PTAB Jan. 3, 2018). Nothing in *Hengdian* is inconsistent with, or casts doubt on, our statutory and regulatory authority to permit Petitioner to file a compliant form of Translation Certification, executed by the translator who translated the Suga reference, after the Petition was filed. Nothing in *Hengdian* or Rule 42.63(b) supports Patent Owner's assertion that Petitioner's submission of a compliant Translation Certification after the Petition was filed, and pursuant to our

[14] Patent Owner acknowledges the Board's authority pursuant to 37 C.F.R. § 42.5(c)(3) to order the filing of a "late-filed affidavit." Mot. Reply 5.

order to do so, is "improper" or impermissible. *Id.* at 5–7.

Third, Patent Owner's contention, that Exhibit 1017 is "new matter in the IPR proceeding introduced after the filing of the Petition" and must be excluded because the original Translation Certification was not signed by the translator having "personal knowledge" of the translation, is without merit or cited support. Mot. 3, 7. Rule 42.63(b) does not recite such a "personal knowledge" requirement, prevent the Board from allowing a party to file a new, compliant attestation, compel exclusion of the Suga translation, or require that "the institution decision must be vacated." *Id.* The project manager's Translation Certification in Exhibit 1005, in fact, attests to the accuracy of the translation "To the best of my knowledge." Ex. 1005, 20. Patent Owner, moreover, did not depose the project manager or translator from the translation service and does not have an evidentiary basis to assert the project manager did not have "personal knowledge" of the accuracy of the translation, e.g., by personally verifying the accuracy. Finally, Patent Owner does not challenge the fact that the translator's sworn declaration filed with Exhibit 1017, taken on its own, is in compliance with Rule 42.63(b). Nor does Patent Owner cite another Board rule or applicable case law in support of its position.

Regarding argument 4 above, it has been our regular practice to permit parties to file an affidavit or declaration in proper form within a reasonable time after an objection has been lodged and considered by the Board. *See Hengdian*, Paper 14, 2 ("order[ing] Petitioner to file satisfactory affidavits attesting to the accuracy of the translation within ten business days of the Decision"). The Board has routinely allowed parties to submit supplemental affidavits to correct affidavits that were not compliant with 37 C.F.R. § 42.63(b). In fact, the Board has consistently allowed parties to

submit compliant affidavits with changed declarants in instances where the translator did not sign the original affidavit. Mot. Opp. 2–3 (citing *TSMC v. DSS Tech. Mgmt*, IPR2014-01030, Paper 11, 3 (PTAB Feb. 3, 2015) (*compare* Ex. 1004 *with* Ex. 1012) (granting motion to file supplemental information in the form of sworn declaration of Japanese-speaking attorney under 18 U.S.C. § 1001 as a substitute for manager's declaration); *Handi Quilter v. Bernina Int'l*, IPR2013-00364, Paper 10, 2 (PTAB Sept. 13, 2013) (*compare* Ex. 1005 dated June 17, 2013 *with* Sub. Ex. 1005 dated Sep. 18, 2013) (substituting translator declaration for manager's declaration)). That is precisely what happened here.

Patent Owner also asserts prejudice for "not knowing" which Suga Exhibit "the Petitioner and Petitioner's expert is relying on (see Exhibit 1021 and 1022)," without further explanation. Mot. Reply 6. Exhibit 1022 is a dictionary definition of "node." How this relates to Patent Owner's argument of prejudice is not explained. *Id.* at 5–6. The Board perceives no difficulty following Petitioner's arguments and evidence, which cite Suga Exhibit 1005, including the testimony of Dr. Buehrer regarding the English language translation of Suga, which is identical in Exhibits 1005 and 1017. Patent Owner, moreover, opted not to depose Dr. Buehrer, did not file a deposition transcript of Dr. Buehrer in this proceeding, and does not allege any difference or substantive deficiency in the English language translation in Suga Exhibits 1005 and 1017, which are identical. We fail to see any prejudice to Patent Owner.

IV. CONCLUSION

We conclude Petitioner has established by a preponderance of the evidence that claims 1–20 of the ’294 patent are unpatentable. In summary:

Claim(s)	35 U.S.C. §	Reference(s)/Basis	Claim(s) Shown Unpatentable	Claim(s) Not shown Unpatentable
1–20	103	Suga, Gorsuch	1–20	
Overall Outcome			1–20	

ORDER

Accordingly, it is:

ORDERED that Petitioner has shown by a preponderance of the evidence that claims 1–20 of the ’294 patent are unpatentable;

FURTHER ORDERED that Patent Owner’s Motion to Exclude (Paper 24) is *denied*; and

FURTHER ORDERED that, because this is a Final Written Decision, parties to the proceeding seeking judicial review of the decision must comply with the notice and service requirements of 37 C.F.R. § 90.2.

FOR PETITIONER:

Paul Hart
Adam Seitz
ERISE IP, P.A.
paul.hart@eriseip.com
adam.seitz@eriseip.com

FOR PATENT OWNER:

Robert Hart
Meredith Addy
Gregory Gulliver
ADDYHART P.C.
robert@addyhart.com
meredith@addyhart.com
gbgulliver65@gmail.com