US006375082B1

(12) **United States Patent**
Kobayashi et al.

(10) **Patent No.: US 6,375,082 B1**
(45) **Date of Patent: Apr. 23, 2002**

(54) **PORTABLE ELECTRONIC DEVICE WITH CONTACTING AND NONCONTACTING INTERFACES**

(75) Inventors: **Tsutomu Kobayashi**, Tokyo; **Masatsugu Mukuge**, Hiratsuka; **Hiroo Nakano**, Yokohama; **Aki Fukuda**, Isehara, all of (JP)

(73) Assignee: **Kabushiki Kaisha Toshiba**, Kawasaki (JP)

(*) Notice: Subject to any disclaimer, the term of this patent is extended or adjusted under 35 U.S.C. 154(b) by 0 days.

(21) Appl. No.: **09/263,955**

(22) Filed: **Mar. 8, 1999**

(30) **Foreign Application Priority Data**

Mar. 24, 1998 (JP) 10-075574
Mar. 24, 1998 (JP) 10-075691
Mar. 24, 1998 (JP) 10-075692

(51) **Int. Cl.**[7] **G06K 19/06**
(52) **U.S. Cl.** **235/492**; 902/26
(58) **Field of Search** 235/492, 379, 235/381, 382, 383, 385, 439, 441, 451; 902/25, 26; 710/102

(56) **References Cited**

U.S. PATENT DOCUMENTS

4,862,501 A * 8/1989 Kamitake et al. ..... 235/380 X
5,206,495 A * 4/1993 Kreft 235/492
5,241,160 A * 8/1993 Bashan et al. 235/380
5,612,532 A * 3/1997 Iwasaki 235/492
5,710,421 A * 1/1998 Kokubu 235/492
5,753,902 A * 5/1998 Fujioka 235/492
5,773,812 A * 6/1998 Kreft 235/492
5,847,372 A * 12/1998 Kreft 235/492
5,929,414 A * 7/1999 Saitoh 235/380
5,999,713 A * 12/1999 Reiner et al. ..... 235/492 X
6,003,777 A * 12/1999 Kowalski 235/492
6,045,043 A * 4/2000 Bashan et al. 235/441
6,098,890 A * 8/2000 Kreft et al. 235/492
6,138,918 A * 10/2000 Tarbouriech 235/492
6,145,749 A * 11/2000 Thuringer et al. 235/492
6,161,762 A * 12/2000 Bashan et al. 235/492
6,168,083 B1 * 1/2001 Berger et al. 235/492
6,206,293 B1 * 3/2001 Gutman et al. ..... 235/441 X

FOREIGN PATENT DOCUMENTS

DE	195 31 372	2/1997
EP	0 424 726	5/1991
JP	10-320510	* 12/1998
WO	WO 96/38814	12/1996

* cited by examiner

Primary Examiner—Michael G. Lee
Assistant Examiner—Jared J. Fureman
(74) *Attorney, Agent, or Firm*—Pillsbury Winthrop

(57) **ABSTRACT**

A portable electronic device has contacting and noncontacting interfaces and an inhibiting section. The contacting interface including a plurality of contact terminals for exchanging driving power and data. The noncontacting interface for generating driving power and demodulating received data from a signal received via an antenna. The inhibiting section for inhibiting an operation of the other one of the contacting and noncontacting interfaces while the portable electronic device is driven via one of the contacting and noncontacting interfaces.

4 Claims, 11 Drawing Sheets

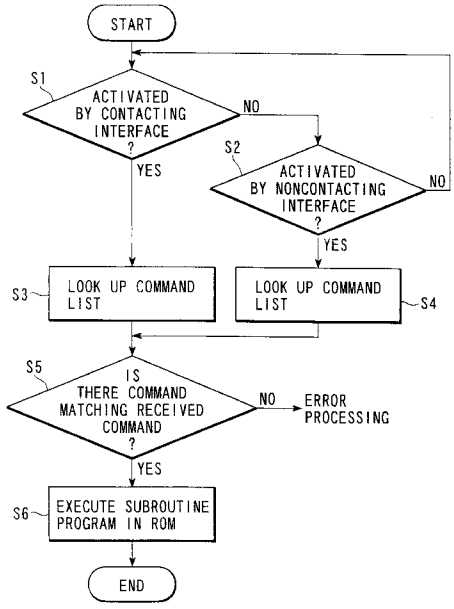

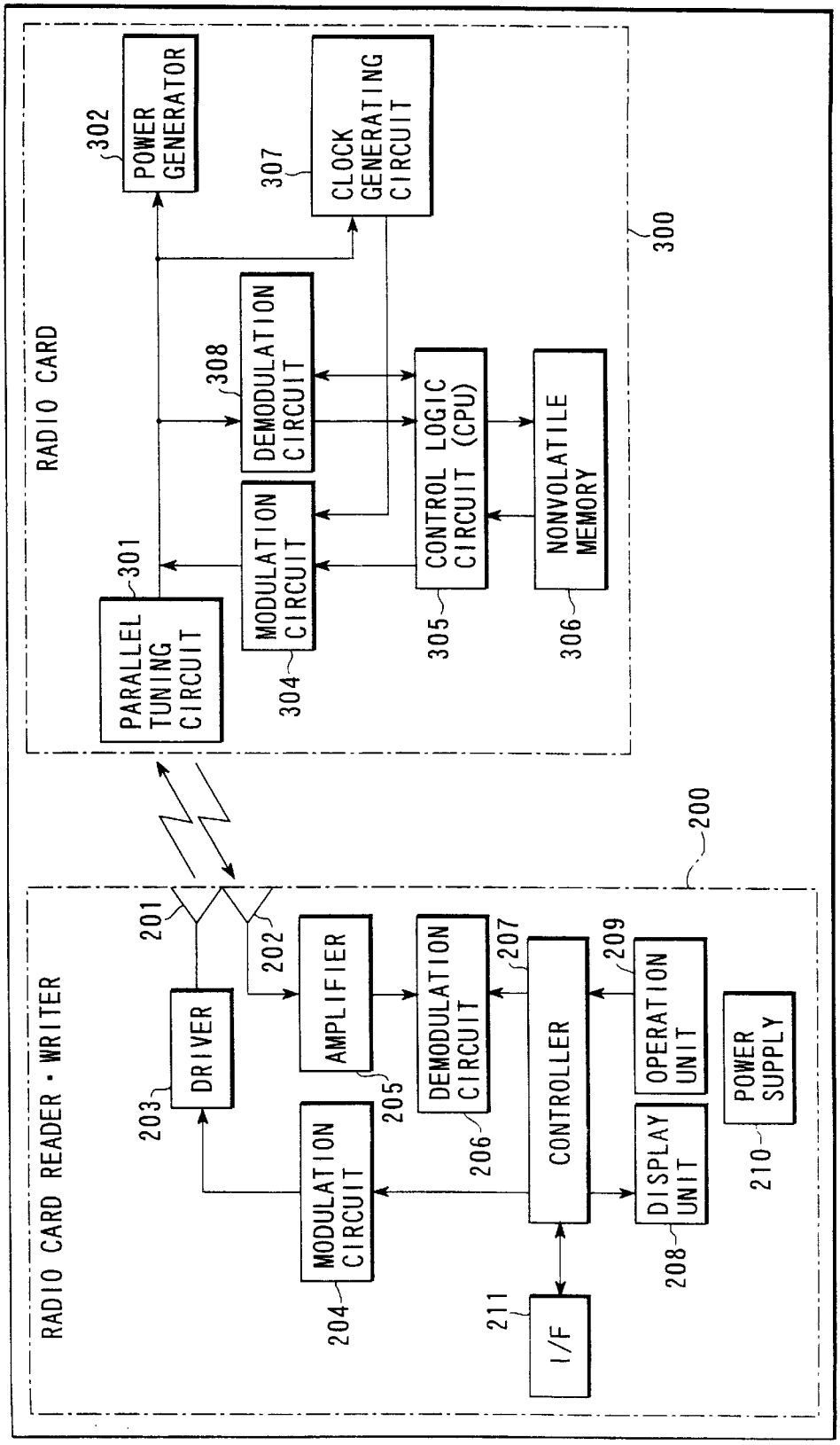
RADIO CARD
POWER GENERATOR
302
CLOCK GENERATING CIRCUIT
307
300
DEMODULATION CIRCUIT
308
CONTROL LOGIC CIRCUIT (CPU)
NONVOLATILE MEMORY
PARALLEL TUNING CIRCUIT
301
MODULATION CIRCUIT
304
305
306
200
RADIO CARD READER・WRITER
201
202
DRIVER
203
AMPLIFIER
205
DEMODULATION CIRCUIT
206
207
CONTROLLER
209
OPERATION UNIT
POWER SUPPLY
210
MODULATION CIRCUIT
204
DISPLAY UNIT
208
I/F
211

FIG. 1

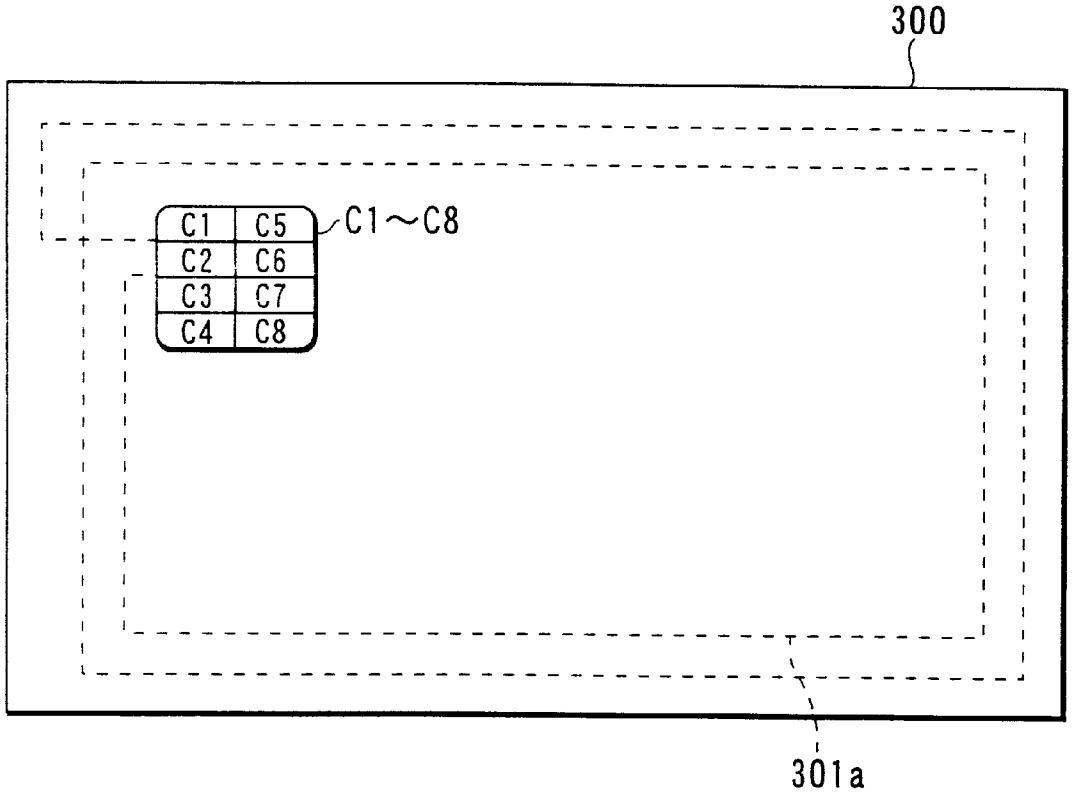

FIG. 2

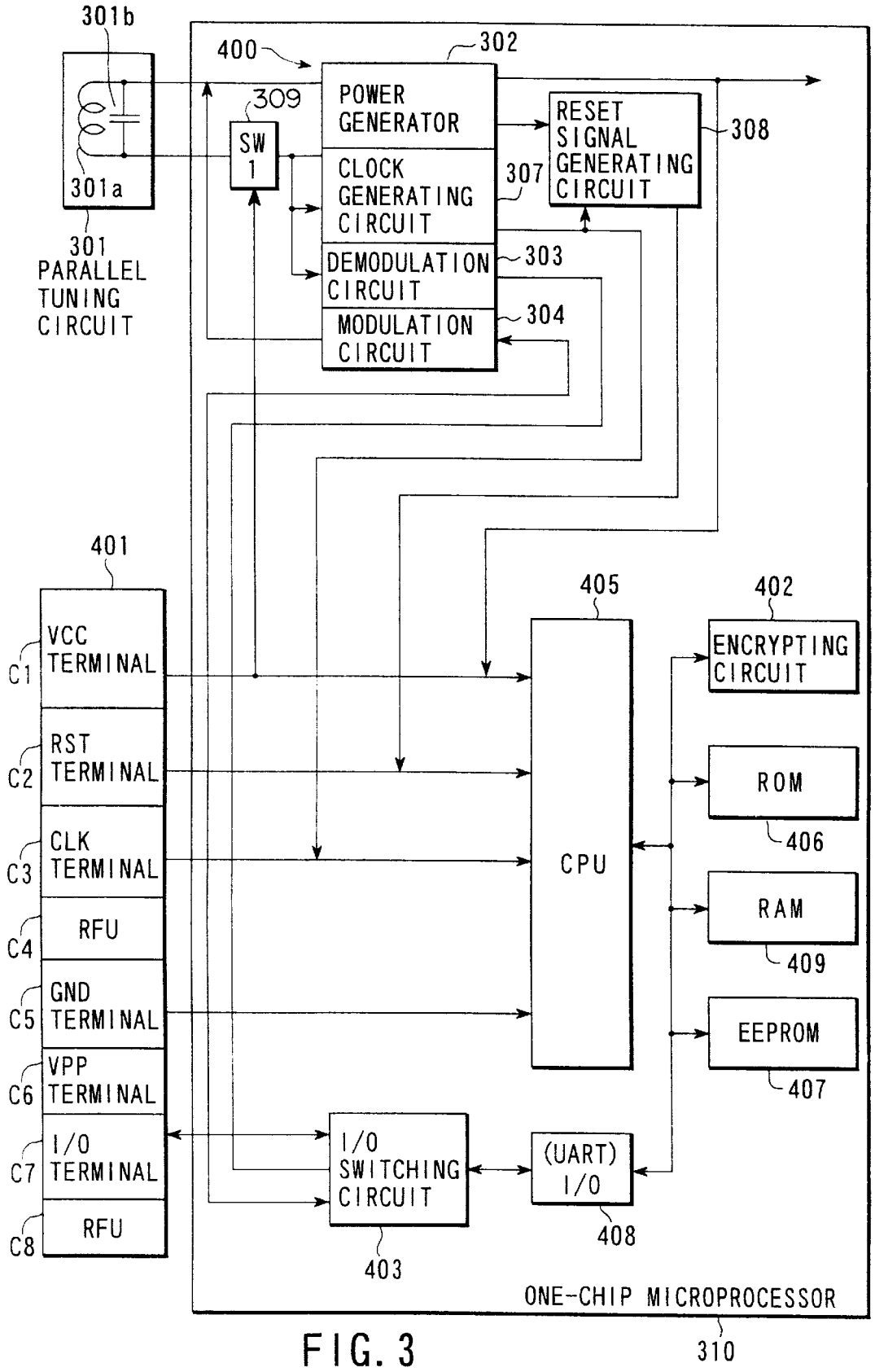
301b
400
302
309
POWER GENERATOR
SW 1
RESET SIGNAL GENERATING CIRCUIT
308
301a
CLOCK GENERATING CIRCUIT
307
301 PARALLEL TUNING CIRCUIT
DEMODULATION CIRCUIT
303
MODULATION CIRCUIT
304
401
405
402
VCC TERMINAL
C1
ENCRYPTING CIRCUIT
RST TERMINAL
C2
ROM
406
CLK TERMINAL
C3
CPU
RFU
C4
RAM
409
GND TERMINAL
C5
EEPROM
VPP TERMINAL
C6
407
I/O TERMINAL
C7
I/O SWITCHING CIRCUIT
(UART) I/O
RFU
C8
408
403
ONE-CHIP MICROPROCESSOR
310

FIG. 3

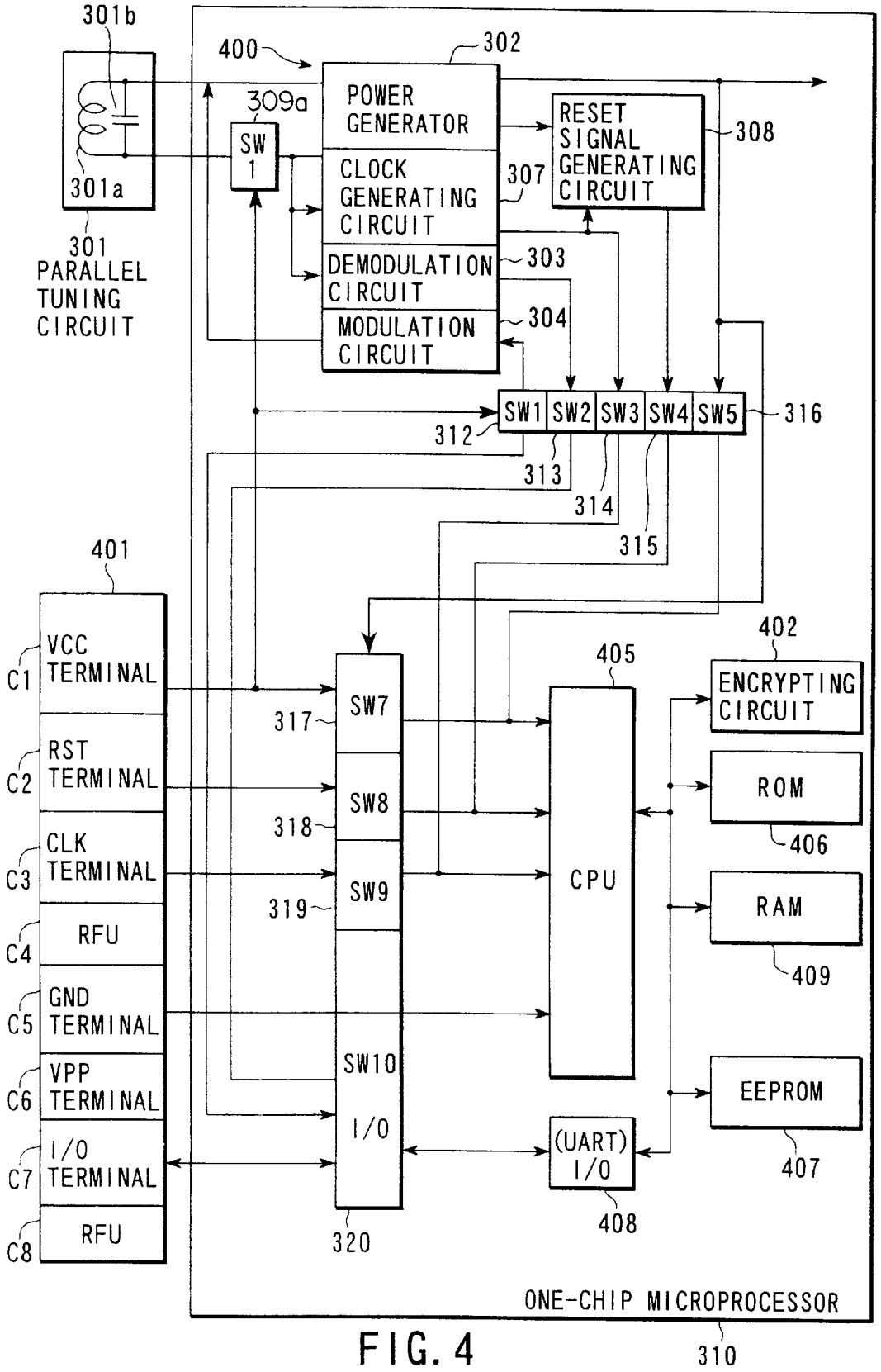
301b
400
302
309a
POWER GENERATOR
RESET SIGNAL GENERATING CIRCUIT
308
SW 1
CLOCK GENERATING CIRCUIT
307
301a
301 PARALLEL TUNING CIRCUIT
DEMODULATION CIRCUIT
303
MODULATION CIRCUIT
304
SW1 SW2 SW3 SW4 SW5
316
312
313
314
315
401
VCC TERMINAL
C1
RST TERMINAL
C2
CLK TERMINAL
C3
RFU
C4
GND TERMINAL
C5
VPP TERMINAL
C6
I/O TERMINAL
C7
RFU
C8
SW7
317
SW8
318
SW9
319
SW10
I/O
320
405
CPU
402
ENCRYPTING CIRCUIT
ROM
406
RAM
409
EEPROM
407
(UART) I/O
408
ONE-CHIP MICROPROCESSOR
310

FIG. 4

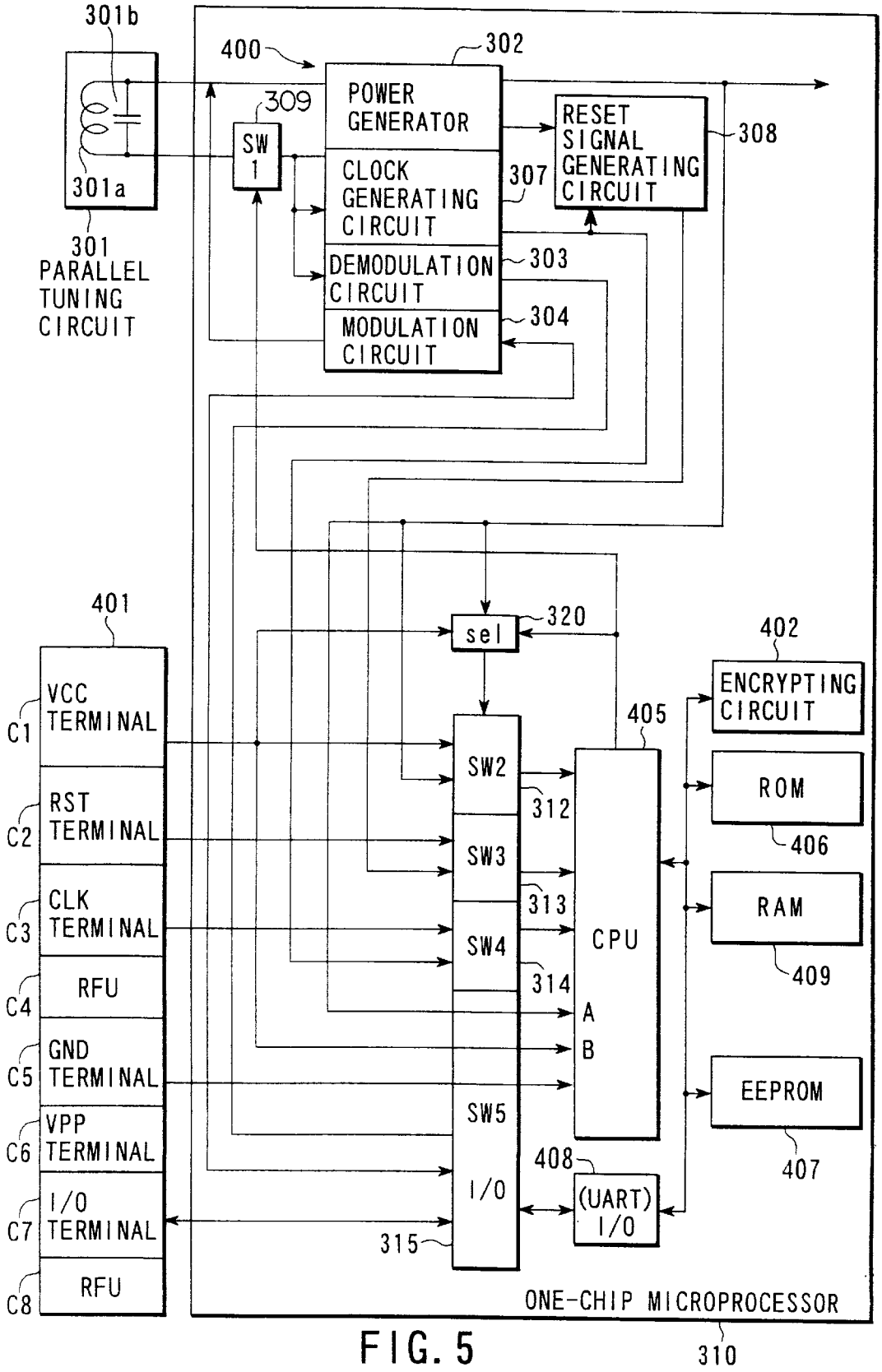
301b
400
302
POWER GENERATOR
309
SW 1
RESET SIGNAL GENERATING CIRCUIT
308
CLOCK GENERATING CIRCUIT
307
301a
301 PARALLEL TUNING CIRCUIT
DEMODULATION CIRCUIT
303
MODULATION CIRCUIT
304
401
sel
320
402
ENCRYPTING CIRCUIT
VCC TERMINAL
C1
405
SW2
ROM
RST TERMINAL
C2
312
406
SW3
CLK TERMINAL
C3
313
RAM
SW4
CPU
RFU
C4
314
409
A
GND TERMINAL
C5
B
EEPROM
VPP TERMINAL
C6
SW5
408
407
I/O TERMINAL
C7
I/O
(UART) I/O
315
RFU
C8
ONE-CHIP MICROPROCESSOR
310

FIG. 5

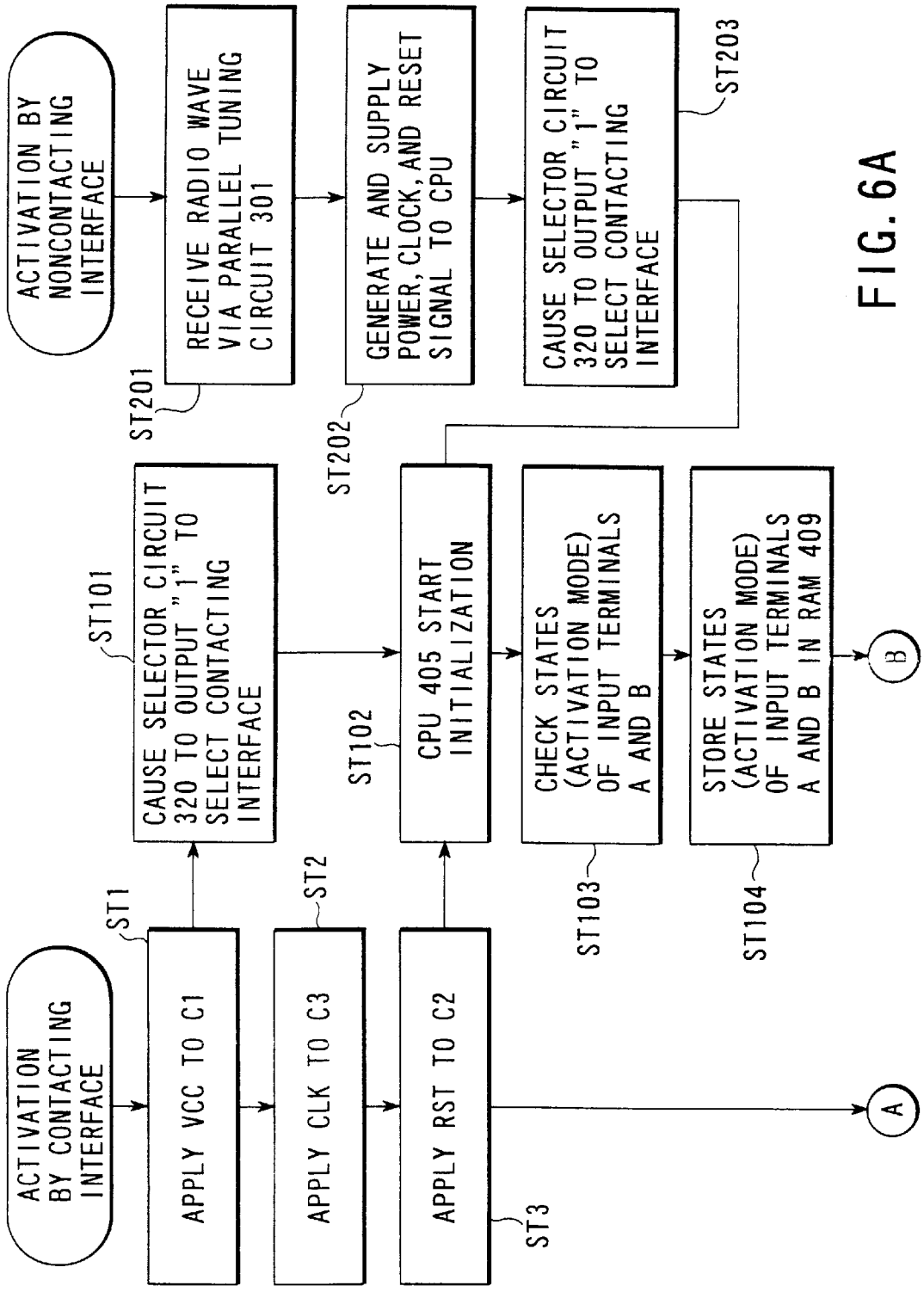
ACTIVATION BY NONCONTACTING INTERFACE
RECEIVE RADIO WAVE VIA PARALLEL TUNING CIRCUIT 301
ST201
GENERATE AND SUPPLY POWER, CLOCK, AND RESET SIGNAL TO CPU
ST202
CAUSE SELECTOR CIRCUIT 320 TO OUTPUT "1" TO SELECT CONTACTING INTERFACE
ST203
ACTIVATION BY CONTACTING INTERFACE
ST1
APPLY VCC TO C1
ST2
APPLY CLK TO C3
APPLY RST TO C2
ST3
A
ST101
CAUSE SELECTOR CIRCUIT 320 TO OUTPUT "1" TO SELECT CONTACTING INTERFACE
ST102
CPU 405 START INITIALIZATION
CHECK STATES (ACTIVATION MODE) OF INPUT TERMINALS A AND B
ST103
STORE STATES (ACTIVATION MODE) OF INPUT TERMINALS A AND B IN RAM 409
ST104
B

FIG. 6A

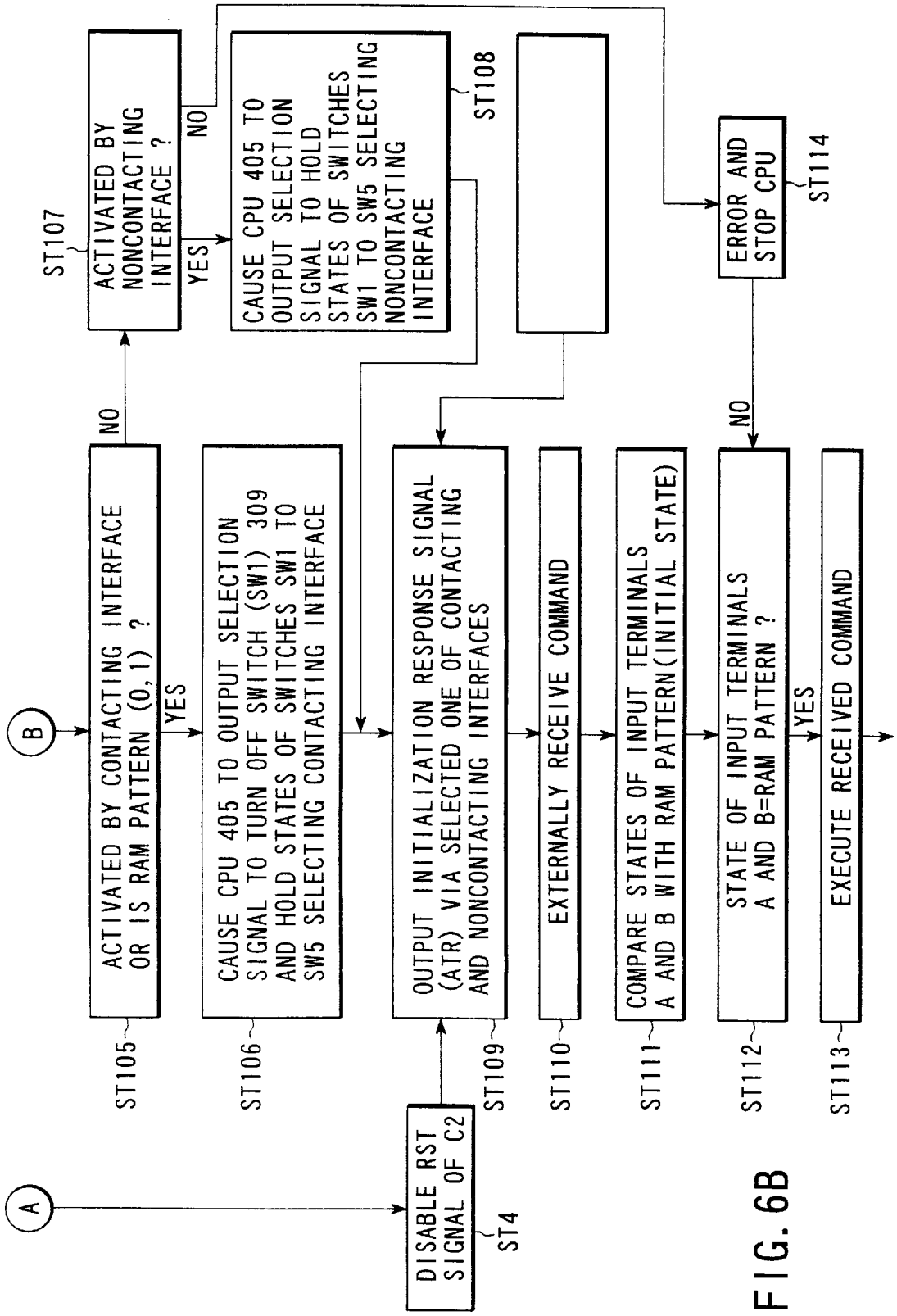
A
B
DISABLE RST SIGNAL OF C2
ST4
ACTIVATED BY CONTACTING INTERFACE OR IS RAM PATTERN (0,1) ?
ST105
NO
YES
ACTIVATED BY NONCONTACTING INTERFACE ?
ST107
NO
YES
CAUSE CPU 405 TO OUTPUT SELECTION SIGNAL TO TURN OFF SWITCH (SW1) 309 AND HOLD STATES OF SWITCHES SW1 TO SW5 SELECTING CONTACTING INTERFACE
ST106
CAUSE CPU 405 TO OUTPUT SELECTION SIGNAL TO HOLD STATES OF SWITCHES SW1 TO SW5 SELECTING NONCONTACTING INTERFACE
ST108
OUTPUT INITIALIZATION RESPONSE SIGNAL (ATR) VIA SELECTED ONE OF CONTACTING AND NONCONTACTING INTERFACES
ST109
EXTERNALLY RECEIVE COMMAND
ST110
COMPARE STATES OF INPUT TERMINALS A AND B WITH RAM PATTERN(INITIAL STATE)
ST111
STATE OF INPUT TERMINALS A AND B=RAM PATTERN ?
ST112
NO
YES
ERROR AND STOP CPU
ST114
EXECUTE RECEIVED COMMAND
ST113

FIG. 6B

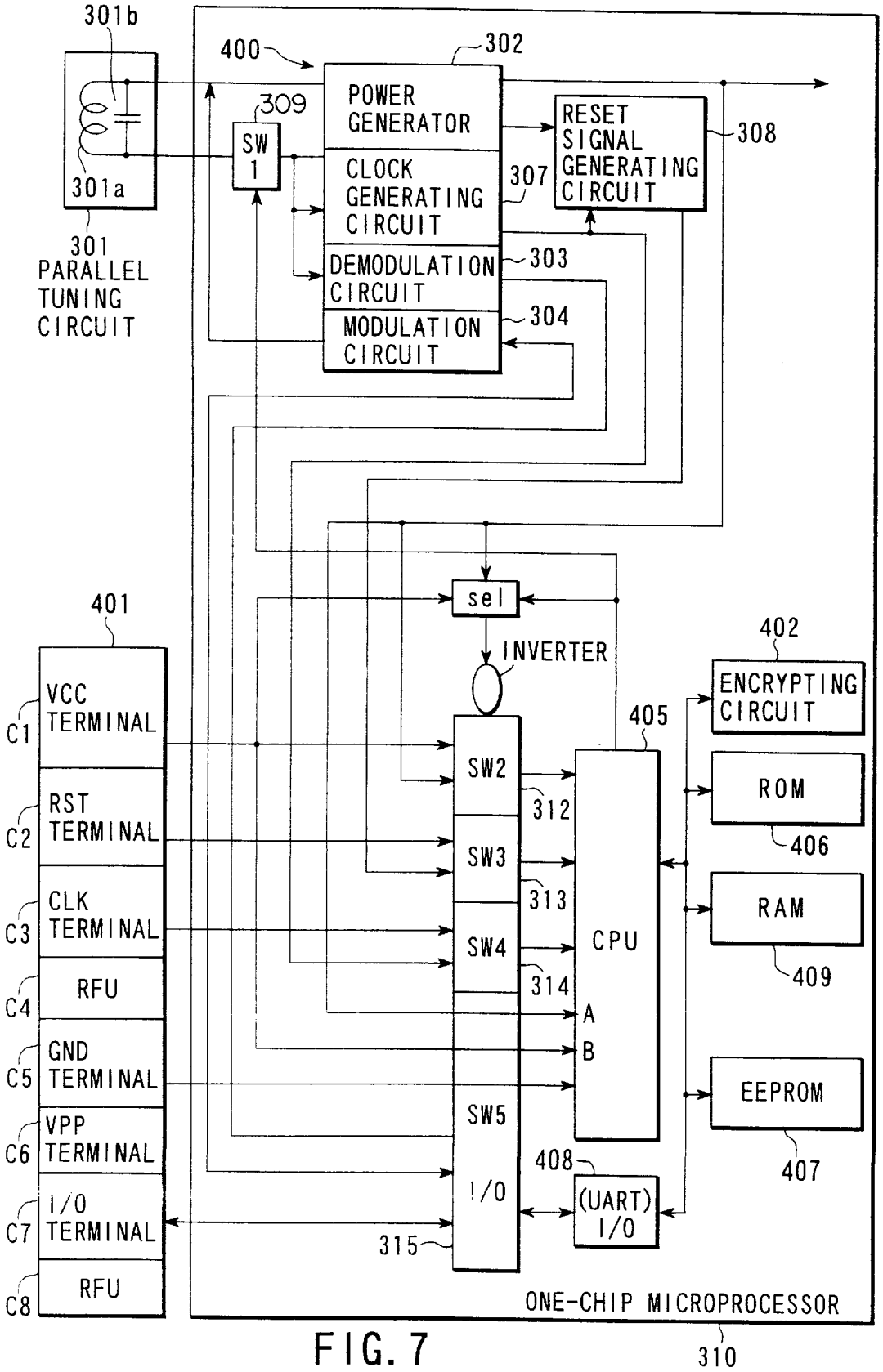
301b
400
302
POWER GENERATOR
309
SW 1
RESET SIGNAL GENERATING CIRCUIT
308
CLOCK GENERATING CIRCUIT
307
301a
301 PARALLEL TUNING CIRCUIT
DEMODULATION CIRCUIT
303
MODULATION CIRCUIT
304
sel
INVERTER
401
402
ENCRYPTING CIRCUIT
405
VCC TERMINAL
C1
SW2
ROM
312
RST TERMINAL
C2
SW3
406
313
CLK TERMINAL
C3
SW4
CPU
RAM
409
RFU
C4
314
A
GND TERMINAL
C5
B
EEPROM
VPP TERMINAL
C6
SW5
408
407
I/O TERMINAL
C7
I/O
(UART) I/O
315
RFU
C8
ONE-CHIP MICROPROCESSOR
310

FIG. 7

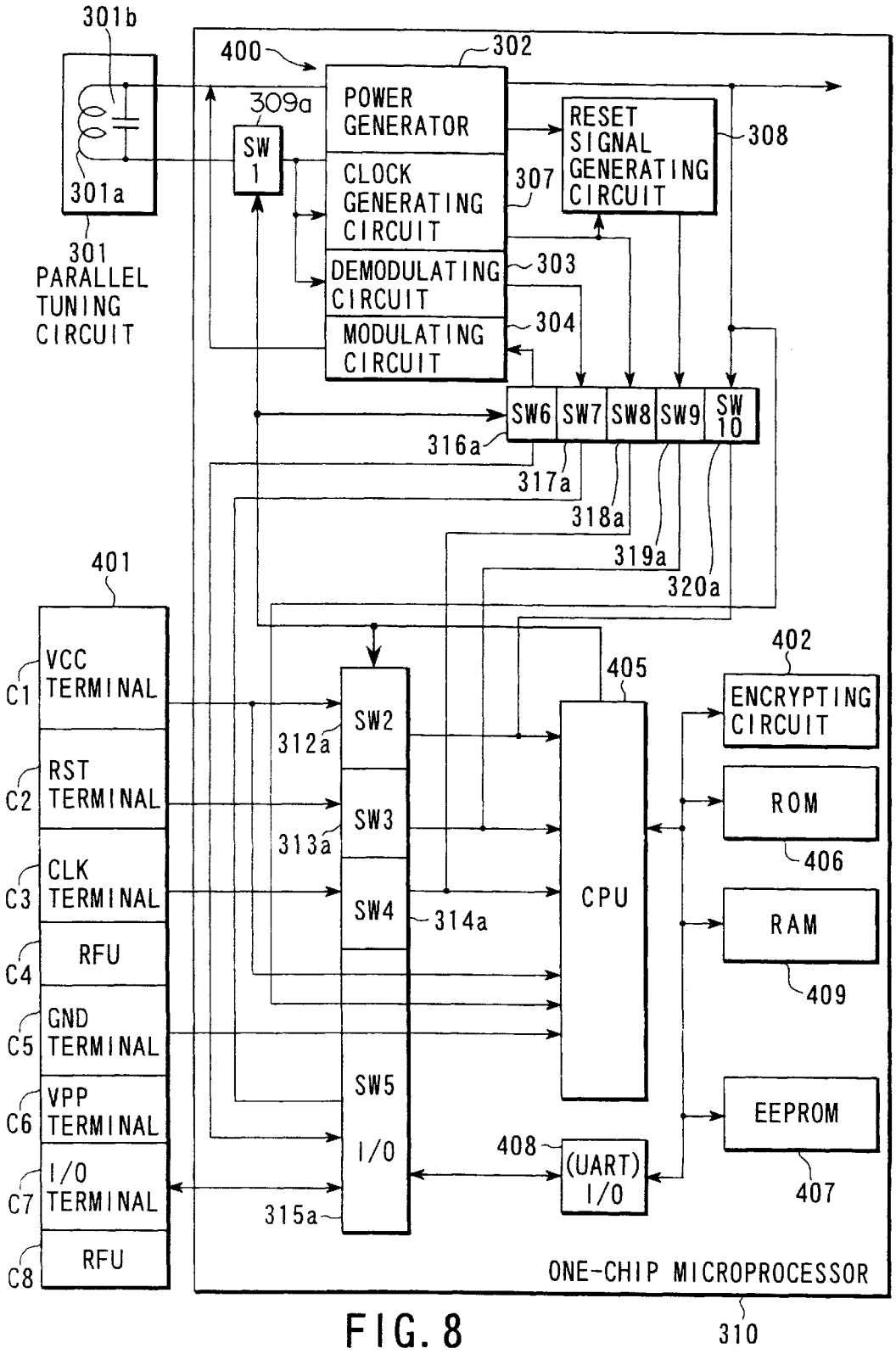
301b
400
302
309a
POWER GENERATOR
RESET SIGNAL GENERATING CIRCUIT
308
SW 1
CLOCK GENERATING CIRCUIT
307
301a
301 PARALLEL TUNING CIRCUIT
DEMODULATING CIRCUIT
303
MODULATING CIRCUIT
304
SW6
SW7
SW8
SW9
SW 10
316a
317a
318a
319a
320a
401
VCC TERMINAL
C1
RST TERMINAL
C2
CLK TERMINAL
C3
RFU
C4
GND TERMINAL
C5
VPP TERMINAL
C6
I/O TERMINAL
C7
RFU
C8
SW2
312a
SW3
313a
SW4
314a
SW5
I/O
315a
405
CPU
402
ENCRYPTING CIRCUIT
ROM
406
RAM
409
EEPROM
407
408
(UART) I/O
ONE-CHIP MICROPROCESSOR
310

FIG. 8

(COMMAND LIST FOR CONTACTING RESPONSE)

COMMAND TYPE	ROM ADDRESS
AAA(ADDITIONAL WRITE)	aaa
BBB(READ)	bbb
CCC(REWRITE)	ccc
DDD(ERASE)	ddd
EEE(ISSUE)	eee

FIG. 9

(COMMAND LIST FOR NONCONTACTING RESPONSE)

COMMAND TYPE	ROM ADDRESS
AAA(ADDITIONAL WRITE)	aaa
BBB(READ)	bbb

FIG. 10

(COMMON COMMAND LIST)

COMMAND TYPE	FEASIBILITY IN CONTACTING RESPONSE	FEASIBILITY IN NONCONTACTING RESPONSE	ROM ADDRESS
AAA(ADDITIONAL WRITE)	1(OK)	1(OK)	aaa
BBB(READ)	1(OK)	1(OK)	bbb
CCC(REWRITE)	1(OK)	0(NO)	ccc
DDD(ERASE)	1(OK)	0(NO)	ddd
EEE(ISSUE)	1(OK)	0(NO)	eee
FFF	1(OK)	1(OK)	fff
GGG	1(OK)	1(OK)	ggg
HHH	1(OK)	0(NO)	hhh
III	1(OK)	0(NO)	iii
JJJ	1(OK)	0(NO)	jjj

FIG. 11

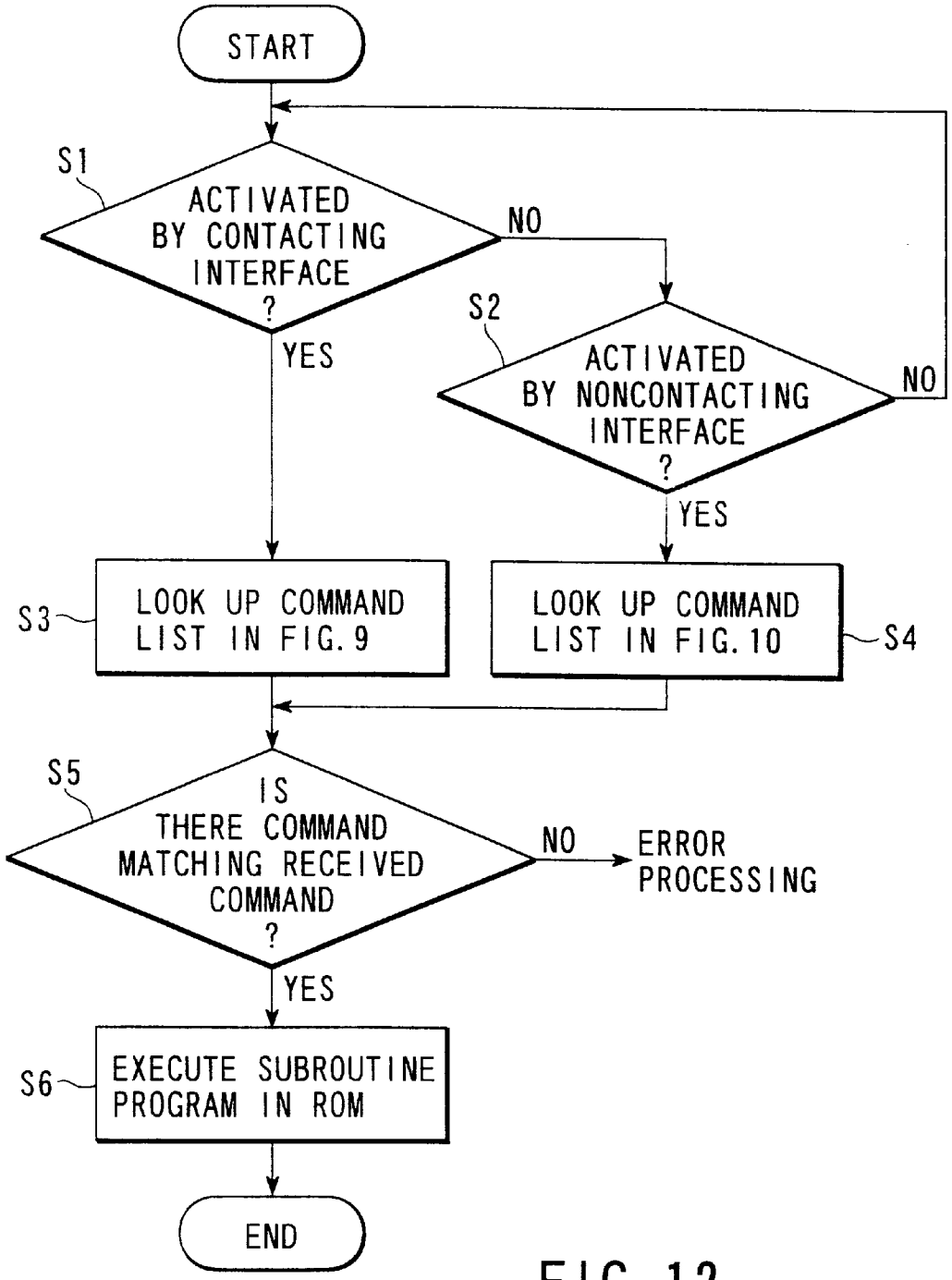
START
S1
ACTIVATED BY CONTACTING INTERFACE ?
NO
YES
S2
ACTIVATED BY NONCONTACTING INTERFACE ?
NO
YES
S3
LOOK UP COMMAND LIST IN FIG. 9
LOOK UP COMMAND LIST IN FIG. 10
S4
S5
IS THERE COMMAND MATCHING RECEIVED COMMAND ?
NO
ERROR PROCESSING
YES
S6
EXECUTE SUBROUTINE PROGRAM IN ROM
END

FIG. 12

PORTABLE ELECTRONIC DEVICE WITH CONTACTING AND NONCONTACTING INTERFACES

BACKGROUND OF THE INVENTION

The present invention relates to a portable electronic device such as a composite IC card having contacting and noncontacting interfaces and, more particularly, to a portable electronic device including a composite IC card having contacting and noncontacting interfaces and capable of well maintaining the reliability as a composite IC card by preventing operation errors when driven from either interface, and an IC module for the composite IC card.

One conventional composite IC card having contacting and noncontacting interfaces as a kind of portable electronic device is disclosed in Jpn. Pat. Appln. KOKOKU Publication No. 4-16831.

This composite IC card disclosed in Jpn. Pat. Appln. KOKOKU Publication No. 4-16831 includes a memory, a CPU, and an IC for generating a signal in response to an external input. The card also includes an electrical contact mechanism for responding to an external apparat us by contacting the apparatus and an antenna mechanism for responding to an external apparatus by noncontacting communication.

Data can be written in the memory of this composite IC card and the contents of the memory can be changed from an external apparatus connected to the electrical contact mechanism. To respond to an external apparatus by noncontacting communication, specific information in the memory is modulated and output from the antenna mechanism.

Jpn. Pat. Appln. KOKAI Publication No. 9-326021 has disclosed a composite IC card incorporating a battery which is charged by a voltage supplied from a terminal apparatus.

Unfortunately, the composite IC cards as described above have the following problems.

That is, either of the above composite IC cards has no countermeasure against operation errors occurring when the card is driven via the noncontacting antenna while the card is connected to and driven by an external apparatus via the electrical contact mechanism, or when the card is driven by an external apparatus via the electrical contact mechanism while the card is driven by an external apparatus via the noncontacting antenna. Consequently, the reliability as a composite IC card is unsatisfactory.

Additionally, either composite IC card uses a common IC such as a memory to respond to an external apparatus by contacting the apparatus and respond to an external apparatus by noncontacting communication. However, when the card responds to an external apparatus by noncontacting communication, only data is simply output to the apparatus, so the card is used only as a collating medium in this case. This limits the applications of the card.

Furthermore, when this composite IC card responds to an external apparatus by noncontacting communication, the internal CPU does not operate. Accordingly, no satisfactory security function can be achieved in this noncontacting response.

BRIEF SUMMARY OF THE INVENTION

The present invention has been made in consideration of the above situation, and has as its object to provide a portable electronic device including a composite IC card having contacting and noncontacting interfaces and capable of well maintaining the reliability as a composite IC card by

preventing operation errors when drive n from either interface, and an IC module for the composite IC card.

It is another object of the present invention to provide a portable electronic device including a composite IC card having contacting and noncontacting interfaces, capable of being used for various purposes by executing equivalent functions when driven in both contacting and noncontacting manners and achieving a satisfactory security function, and also capable of well maintaining the reliability as a composite IC card by preventing operation errors when driven from either interface.

To achieve the above objects, according to an aspect of the present invention, there is provided a portable electronic device comprising:

a contacting interface including a plurality of contact terminals for exchanging driving power and data;

a noncontacting interface for generating driving power and demodulating received data from a signal received via an antenna; and

inhibiting means for inhibiting an operation of the other one of the contacting and noncontacting interfaces while the portable electronic device is driven via one of the contacting and noncontacting interfaces.

To achieve the above objects, according to another aspect of the present invention, there is provided a portable electronic device which has contacting and noncontacting interfaces and a control circuit connected to the contacting and noncontacting interfaces, and is driven by the contacting or noncontacting interface, comprising:

detecting means for detecting whether the portable electronic device is driven via the contacting or noncontacting interface; and

connecting means for selectively connecting one of the contacting and noncontacting interfaces to the control circuit and inhibiting a signal input and output via the other one of the contacting or noncontacting interface on the basis of the detection result from the detecting means.

To achieve the above objects, according to still another aspect of the present invention, there is provided a portable electronic device which has contacting and noncontacting interfaces and a control circuit connected to the contacting and noncontacting interfaces, and is driven by the contacting or noncontacting interface, comprising:

detecting means for detecting whether the portable electronic device is driven via the contacting or noncontacting interface; and

switching means for switching commands executable by the portable electronic device on the basis of the detection result from the detecting means.

Additional objects and advantages of the invention will be set forth in the description which follows, and in part will be obvious from the description, or may be learned by practice of the invention. The objects and advantages of the invention may be realized and obtained by means of the instrumentalities and combinations particularly pointed out hereinafter.

BRIEF DESCRIPTION OF THE SEVERAL VIEWS OF THE DRAWING

The accompanying drawings, which are incorporated in and constitute a part of the specification, illustrate presently preferred embodiments of the invention, and together with the general description given above and the detailed description of the preferred embodiments given below, serve to explain the principles of the invention.

FIG. **1** is a block diagram showing the arrangement of a radio card system using a radio combination card as a data storage medium applied as a composite IC card as a kind of portable electronic device according to the present invention;

FIG. **2** is a view showing a composite IC card IC module including eight electrical contacts C**1** to C**8** exposed to the outer surface as an electrical contact mechanism by which the radio combination card responds to an external apparatus by contacting the apparatus, and a one-chip microprocessor **310** embedded in the card;

FIG. **3** is a block diagram showing the arrangement of a one-chip microprocessor **310** embedded in a radio combination card **300** according to the first embodiment of the present invention;

FIG. **4** is a block diagram showing the arrangement of a one-chip microprocessor **310** embedded in a radio combination card **300** according to the second embodiment of the present invention;

FIG. **5** is a block diagram showing the arrangement of a one-chip microprocessor **310** embedded in a radio combination card **300** according to the third embodiment of the present invention;

FIGS. **6**A and **6**B are flow charts for explaining the operation of a radio card system using a radio combination card as a data storage medium applied as a composite IC card as a kind of portable electronic device according to the present invention;

FIG. **7** is a block diagram showing the arrangement of a one-chip microprocessor **310** embedded in a radio combination card **300** according to a modification of the third embodiment of the present invention;

FIG. **8** is a block diagram showing the arrangement of a one-chip microprocessor **310** embedded in a radio combination card **300** according to the fourth embodiment of the present invention;

FIG. **9** is a view showing a command list set for a contacting response in a radio combination card **300** according to the fifth embodiment of the present invention;

FIG. **10** is a view showing a command list set for a noncontacting response in the radio combination card **300** according to the fifth embodiment of the present invention;

FIG. **11** is a view showing a command list set for both contacting and noncontacting responses in the radio communication card **300** according to the fifth embodiment of the present invention; and

FIG. **12** is a flow chart for explaining the operation of a CPU.

DETAILED DESCRIPTION OF THE INVENTION

Reference will now be made in detail to the presently preferred embodiments of the invention as illustrated in the accompanying drawings, in which like reference characters designate like or corresponding parts throughout the several drawings.

Embodiments of the present invention will be described in detail below with reference to the accompanying drawing.

First Embodiment

The first embodiment of the present invention will be described below with reference to FIGS. **1** to **3**.

FIG. **1** shows the arrangement of a radio card system using a radio combination card as a data storage medium applied as a composite IC card as a kind of portable electronic device according to the present invention.

As shown in FIG. **1**, this radio card system is roughly divided into a radio card reader·writer **200** as a data processor and a radio combination card **300** as a portable data storage medium having both a contacting communication function and a radio communication function.

The radio card reader·writer **200** transmits read and write (store) commands to the radio combination card **300**, processes readout data from the card **300**, and transmits write data to the card **300**. As shown in FIG. **1**, the radio card reader·writer **200** includes a controller **207**, a modulation circuit **204**, a driver **203** for transmission, a transmitting antenna **201**, a receiving antenna **202**, an amplifier **205** for reception, a demodulation circuit **206**, an operation unit **209** such as a keyboard, a display unit **208**, a power supply **210** mainly composed of a battery for supplying an operating voltage to each unit, and an interface **211** connected to an external apparatus (not shown).

The radio combination card **300** decodes commands and writes (stores) data from and transmits data to the radio card reader writer **200**. As shown in FIG. **1**, a parallel tuning circuit (receiving means) **301** including a loop antenna coil (not shown) as a transmitting/receiving antenna and a tuning capacitor (not shown), a power generator (power generating means) **302**, a demodulation circuit (demodulating means) **303**, a control logic circuit (CPU) **305**, a modulation circuit (modulating means) **304**, a nonvolatile memory **306** as a storage means such as an EEPROM, and a clock generating circuit (clock generating means) **307**.

Assume that this radio combination card **300** is used to execute a contacting communication function (to be described later) and, as shown in FIG. **2**, includes eight electrical contacts C**1** to C**8** exposed to the outer surface as an electrical contact mechanism for responding to an external apparatus by contacting the apparatus.

The radio card reader·writer **200** and the radio combination card **300** will be described in more detail below.

First, a data read performed for the radio combination card **300** by the radio card reader·writer **200** will be described.

The controller **207** of the radio card reader·writer **200** generates and supplies a read command to the modulation circuit **204**.

The modulation circuit **204** modulates the command by an arbitrary modulation scheme and inputs the modulated command to the driver **203** for transmission.

The driver **203** amplifies the modulated signal to an intensity enough to radiate the modulated signal and supplies the amplified signal to the transmitting antenna **201**.

The signal supplied to the transmitting antenna **201** is radiated into air and received by the parallel tuning circuit **301** of the radio combination card **300**.

The demodulation circuit **303** demodulates the received signal and supplies the demodulated signal to the control logic circuit **305** where command analysis is performed.

The control logic circuit **305** determines that the command indicates a data read, reads out predetermined data from the nonvolatile memory **306** storing card data, and inputs the readout data to the modulation circuit **304**.

The modulation circuit **304** modulates the card data and supplies the modulated data to the parallel tuning circuit **301**.

The signal supplied to the parallel tuning circuit **301** is radiated into air and received by the receiving antenna **202** of the radio card reader·writer **200**.

The received signal is applied to the amplifier **205** for reception.

The amplifier **205** amplifies the received signal and inputs the amplified signal to the demodulation circuit **206** where the signal is demodulated.

The demodulated signal is supplied to the controller **207** where predetermined data processing is performed.

Note that the display unit **208** can display data and the operation unit **209** can input data where necessary.

Next, a data write performed for the radio combination card **300** by the radio card reader·writer **200** will be described.

The controller **207** of the radio card reader·writer **200** generates and supplies a write command and write data to the modulation circuit **204**.

The modulation circuit **204** modulates the command and data by an arbitrary modulation scheme and inputs the modulated command and data to the driver **203** for transmission.

The driver **203** amplifies the modulated signal to an intensity enough to radiate the modulated signal and supplies the amplified signal to the transmitting antenna **201**.

The signal supplied to the transmitting antenna **201** is radiated into air and received by the parallel tuning circuit **301** of the radio combination card **300**.

The demodulation circuit **303** demodulates the received signal and supplies the demodulated signal to the control logic circuit **305** where command analysis is performed.

The control logic circuit **305** determines that the command indicates a data write, and writes the write data transmitted after the write command at a predetermined address of the nonvolatile memory **306**.

The power generator **302** of the radio combination card **300** branches and rectifies a signal received by the parallel tuning circuit **301** to generate power to be consumed in the radio combination card **300**.

Also, on the basis of a signal received by the parallel tuning circuit **301**, the clock generating circuit **307** of the radio combination card **300** generates clocks necessary to operate each circuit.

The clock generating circuit **307** outputs the generated clocks to the demodulation circuit **303**, the modulation circuit **304**, and the control logic circuit **305**.

As described above, the transmitting antenna **201** and the receiving antenna **202** of the radio card reader·writer **200** must be arranged close and opposite to the parallel tuning circuit **301** of the radio combination card **300**.

The transmitting antenna **201** radiates a high-intensity signal to the radio combination card **300**.

The receiving system has a high sensitivity to receive weak signals from the radio combination card **300**.

The internal arrangement of the radio combination card **300** will be described in detail below with reference to FIGS. **2** and **3**.

As shown in FIGS. **2** and **3**, a contacting interface **401** for contacting a terminal apparatus is formed on the card surface of the radio combination card **300**. This contacting interface **401** includes contact terminals C**1** (VCC), C**2** (RST), C**3** (CLK), C**4** (a space terminal for the future: RFU), C**5** (GND), C**6** (VPP: unused), C**7** (I/O), and C**8** (a space terminal for the future: RFU).

A one-chip microprocessor **310** as shown in FIGS. **2** and **3** is embedded in the radio combination card **300**.

As shown in FIG. **3**, this one-chip microprocessor **310** includes a series of data processors such as a control CPU (Central Processing Unit) **405** corresponding to the control logic circuit **305**, a ROM **406** storing control programs, a data memory **407** which is an EEPROM for recording a password (e.g., four digits) and data, an interface circuit **408** such as a UART, a RAM **409** for temporary storage, an encrypting circuit **402**, and an I/O switching circuit **403**.

When contacting data exchange is performed by using this radio combination card **300**, a terminal apparatus into which the card **300** is inserted supplies a voltage from the contact terminal C**1** to the VCC (normally 5V) terminal and applies a signal from the contact terminals C**3**, C**2**, and C**5** to the CLK (clock), RST (reset), and GND (ground potential) terminals, respectively. Simultaneously, the contact terminal C**7** is connected to the I/O port to exchange data.

The individual units are formed as an IC chip on a single board.

Also, these units are connected to the terminals through wires, and the terminals and the board mounting the IC chip are integrated and handled as an IC module. Accordingly, as shown in FIG. **2**, these terminals are so embedded in the card as to be exposed to the card surface.

The card **300** also includes the parallel tuning circuit **301** for noncontacting data exchange.

That is, the parallel tuning circuit **301** receives a two-phase phase-modulated wave signal (first two-phase phase-modulated wave signal) from the transmitting antenna **201** of the radio card reader writer **200** and transmits a two-phase phase-modulated wave signal (second two-phase phase-modulated wave signal) with a carrier frequency f0/2. This parallel tuning circuit **301** is composed of a loop antenna coil **301***a* and a tuning capacitor **301***b*.

The loop antenna coil **301***a* of this parallel tuning circuit **301** receives signals and at the same time transmits the carrier frequency f0/2. Since power for generating a power supply voltage must be efficiently extracted from a received radio wave, the loop antenna coil **301***a* is tuned to a carrier frequency f0 of the received two-phase phase-modulated wave signal.

This carrier frequency for transmission can also be a fraction of an integer multiple, instead of ½, of the carrier frequency of the received two-phase phase-modulated wave signal.

The loop antenna coil **301***a* simply transmits and receives signals, so a single coil can be used for both transmission and reception. However, separate coils can also be used for transmission and reception.

To perform noncontacting data exchange, the one-chip microprocessor **310** incorporates a noncontacting interface circuit **400** for exchanging data via the parallel tuning circuit **301**.

This noncontacting interface circuit **400** includes the power generator **302**, the clock generating circuit (clock generating means) **307**, the demodulation circuit (demodulating means) **303**, the modulation circuit (modulating means) **304**, and a reset signal generating circuit **308**. The power generator **302** generates power to be supplied to the whole internal circuit of the radio combination card **300** by using the two-phase phase-modulated wave signal from the parallel tuning circuit **301**. The clock generating circuit **307** generates operating clocks from an analog signal received via the parallel tuning circuit **301**. The demodulation circuit **303** converts the analog signal received via the parallel tuning circuit **301** into a digital signal to be read out by the CPU **405** of the one-chip

microprocessor **310**. The modulation circuit **304** modulates an oscillation circuit output by using a signal from the CPU **405** and transmits the modulated output from the loop antenna (transmitting) coil **301***a* of the parallel tuning circuit **301**. The reset signal generating circuit **308** generates a reset signal on the basis of the clocks generated by the clock generating circuit **307**.

The radio combination card **300** incorporates a switch (SW) **309** for switching on and off the conduction between the noncontacting interface **400** and the antenna coil **301***a* (the parallel tuning circuit **301**).

This switch (SW) **309** is normally ON (connected) and turned off when a Vcc voltage is applied from the contact terminal C**1** of the contacting interface **401** to the VCC (normally 5V) terminal.

The operation of the radio combination card according to the first embodiment of the present invention will be described below.

For example, the card **300** is inserted into a terminal apparatus, and the Vcc voltage is applied from the contact terminal C**1** of the contacting interface **401** of the card **300** to the VCC (normally 5V) terminal. Consequently, the switch (SW) **309** is turned off.

Subsequently, contacting data exchange is performed via the CLK terminal, RST terminal, and I/O port.

That is, while contacting data exchange is performed, the switch (SW) **309** is kept OFF, so the noncontacting interface **400** is held inoperative.

Accordingly, even if the receiving antenna (parallel tuning circuit **301**) receives a certain radio wave while contacting data exchange or contacting driving is performed, none of the power generator **302**, the clock generating circuit (clock generating means) **307**, the demodulation circuit (demodulating means) **303**, the modulation circuit (modulating means) **304**, and the reset signal generating circuit **308** operates. This allows the contacting driving or contacting data exchange to be kept performed.

Second Embodiment

The second embodiment of the present invention will be described below with reference to FIG. **4**.

In this second embodiment, the arrangements shown in FIGS. **1** and **2** are similarly applied, and the internal arrangement of a radio combination card **300** partially differs from that shown in FIG. **3**. So, a description of identical portions will be omitted.

The radio combination card **300** incorporates a switch (SW1) **309***a* for switching on and off the conduction between a noncontacting interface **400** and an antenna coil (parallel tuning circuit **301**).

This switch (SW1) **309***a* is normally ON (connected) and turned off when a Vcc voltage is applied from a contact terminal C**1** of a contacting interface **401** to a VCC (normally 5V) terminal.

In the second embodiment, in addition to this switch (SW1) **309***a*, switches (SW**2**, SW**3**, SW**4**, SW**5**, and SW**6**) **312**, **313**, **314**, **315**, and **316** are connected to a power generator **302**, a clock generating circuit (clock generating means) **307**, a demodulation circuit (demodulating means) **303**, a modulation circuit (modulating means) **304**, and a reset signal generating circuit **308**, respectively, of the noncontacting interface **400**.

These switches (SW**2** to SW**6**) **312** to **316** are normally ON (connected) and turned off when the Vcc voltage is applied from the contact terminal C**1** of the contacting interface **401** to the VCC (normally 5V) terminal.

The switches (SW**2** to SW**6**) **312** to **316** inhibit signal inputs and outputs via the noncontacting interface **400**.

That is, while contacting data exchange or contacting driving is performed, the switches (SW**2** to SW**6**) **312** to **316** completely inhibit signal inputs and outputs via the noncontacting interface **400** and prevent operation errors.

Additionally, in this second embodiment, switches (SW**7**, SW**8**, SW**9**, and SW**10**) **317**, **318**, **319**, and **320** are connected to the contact terminal C**1** (VCC) and other contact terminals C**2** (RST), C**3** (CLK), and C**7** (I/O), respectively, of the contacting interface **401**.

These switches (SW**7** to SW**10**) **317** to **320** are normally ON (connected) and turned off when the Vcc voltage is applied from the power generator **302** of the noncontacting interface **400**.

The switches (SW**7** to SW**10**) **317** to **320** inhibit signal inputs and outputs via the contacting interface **401**.

That is, while noncontacting data exchange or noncontacting driving is performed, the switches (SW**7** to SW**10**) **317** to **320** completely inhibit signal inputs and outputs via the contacting interface **401** and prevent operation errors.

As described above, each of the first and second embodiments of the present invention includes an operation inhibiting means for inhibiting the operation of the noncontacting interface **400** while the card is driven via the contacting interface **401**. Therefore, no operation error occurs even if electric waves are radiated in the environment while information is exchanged via the contacting interface **401**.

Also, each of the first and second embodiments of the present invention includes a means for cutting off the conduction between the noncontacting interface **400** and the antenna coil **301***a* (parallel tuning circuit **301**) while the card is driven via the contacting interface **401**. Accordingly, no operation error occurs even if electric waves are radiated in the environment while information is exchanged via the contacting interface **401**.

In the first and second embodiments of the present invention as described above, the noncontacting interface **400** of the microprocessor includes the power generator **302** which operates in accordance with an output from the parallel tuning circuit **301**, the clock generating circuit (clock generating means) **307**, the demodulation circuit (demodulating means) **303**, the modulation circuit (modulating means) **304**, and the reset signal generating circuit **308**. A switch for switching on and off the conduction between the noncontacting interface **400** and the parallel tuning circuit **301** is also included. This switch is turned off when the Vcc voltage is applied via the contacting interface **401**. Therefore, even if electric waves are radiated in the environment while information is exchanged via the contacting interface **401**, the noncontacting interface **400** does not operate at all, so no operation error takes place.

The above first and second embodiments of the present invention can be summarized as follows.

1. A radio combination card having contacting and noncontacting interfaces and driven via the contacting or noncontacting interface is characterized by comprising an operation inhibiting means for inhibiting the operation of the noncontacting interface while the card is driven via the contacting interface.

2. A radio combination card described in item 1 above is characterized in that the operation inhibiting means for inhibiting the operation of the noncontacting interface while the card is driven via the contacting interface is a means for cutting off the conduction between the noncontacting interface and an antenna coil.

3. A radio combination card having contacting and noncontacting interfaces and driven via the contacting or noncontacting interface is characterized by comprising a switch for switching on and off the conduction between the noncontacting interface and an antenna coil, wherein the switch is turned off when the Vcc voltage is applied via the contacting interface.

4. A radio combination card having contacting and noncontacting interfaces and driven via the contacting or noncontacting interface is characterized by comprising an inhibiting means for inhibiting signal inputs and outputs via the contacting interface while the card is driven via the noncontacting interface.

5. A radio combination card described in item 4 above is characterized in that the inhibiting means comprises a means for inhibiting signal inputs and outputs between the contacting interface and a control circuit.

6. A radio combination card described in item 4 above is characterized in that the inhibiting means comprises a means for turning off the switches SW**7**, SW**8**, SW**9**, and SW**10** connected between the contacting terminals C**1** (VCC), C**2** (RST), C**3** (CLK), and C**7** (I/O), respectively, of the contacting interface and the control circuit.

7. A radio combination card having contacting and noncontacting interfaces and driven via the contacting or noncontacting interface is characterized by comprising an inhibiting means for inhibiting signal inputs and outputs via the noncontacting interface while the card is driven via the contacting interface.

8. A radio combination card described in item 7 above is characterized in that the inhibiting means comprises a means for inhibiting signal inputs and outputs between the noncontacting interface and a control circuit.

9. A radio combination card described in item 7 above is characterized in that the inhibiting means comprises the switches SW**2**, SW**3**, SW**4**, SW**5**, and SW**6** between the power generator **302**, the clock generating circuit (clock generating means) **307**, the demodulation circuit (demodulating means) **303**, the modulation circuit (modulating means) **304**, and the reset signal generating circuit **308**, respectively, of the noncontacting interface and the control circuit, and turns off the switches SW**2** to SW**6** when the Vcc voltage is applied from the contact terminal C**1** of the contacting interface to the VCC (normally 5V) terminal.

10. A radio combination card having contacting and noncontacting interfaces and driven via the contacting or noncontacting interface is characterized by comprising a first inhibiting means for inhibiting signal inputs and outputs via the noncontacting interface while the card is driven via the contacting interface, and a second inhibiting means for inhibiting signal inputs and outputs via the contacting interface while the card is driven via the noncontacting interface.

The first and second embodiments of the present invention as described in detail above can provide a portable electronic device including a composite IC card having contacting and noncontacting interfaces and capable of well maintaining the reliability as a composite IC card by preventing operation errors when driven from either interface, and an IC module for the composite IC card.

Third Embodiment

The third embodiment of the present invention will be described below with reference to FIG. **5**.

The configuration of a radio card system shown in FIG. **1** and the arrangement of a radio combination card shown in FIG. **2** are similarly applied to this third embodiment.

The arrangement of a radio combination card **300** will be described in detail below with reference to FIGS. **2** and **5**.

As shown in FIGS. **2** and **5**, a contacting interface **401** for contacting a terminal apparatus is formed on the card surface of the radio combination card **300**. This contacting interface **401** includes contact terminals C**1** (VCC), C**2** (RST), C**3** (CLK), C**4** (a space terminal for the future: RFU), C**5** (GND), C**6** (VPP: unused), C**7** (I/O), and C**8** (a space terminal for the future: RFU).

A one-chip microprocessor **310** as shown in FIGS. **2** and **5** is embedded in the radio combination card **300**.

As shown in FIG. **5**, this one-chip microprocessor **310** includes a series of data processors such as a control CPU (Central Processing Unit) **405** corresponding to a control logic circuit **305**, a ROM **406** storing control programs, a data memory **407** which is an EEPROM for recording a password (e.g., four digits) and data, an interface circuit **408** such as a UART, a RAM **409** for temporary storage, and an encrypting circuit **402**.

When contacting data exchange is performed by using this radio combination card **300**, a terminal apparatus into which the card **300** is inserted supplies a voltage from the contact terminal C**1** to a VCC (normally 5V) terminal and applies a signal from the contact terminals C**3**, C**2**, and C**5** to CLK (clock), RST (reset), and GND (ground potential) terminals, respectively. Simultaneously, the contact terminal C**7** is connected to an I/O port to exchange data.

The individual units are formed as an IC chip on a single board.

Also, these units are connected to the terminals through wires, and the terminals and the board mounting the IC chip are integrated and handled as an IC module. Accordingly, as shown in FIG. **2**, these terminals are so embedded in the card as to be exposed to the card surface.

The card **300** also includes a parallel tuning circuit **301** for noncontacting data exchange.

That is, the parallel tuning circuit **301** receives a two-phase phase-modulated wave signal (first two-phase phase-modulated wave signal) from a transmitting antenna **201** of a radio card reader·writer **200** and transmits a two-phase phase-modulated wave signal (second two-phase phase-modulated wave signal) with a carrier frequency f0/2. This parallel tuning circuit **301** is composed of a loop antenna coil **301***a* and a tuning capacitor **301***b*.

The loop antenna coil **301***a* of this parallel tuning circuit **301** receives signals and at the same time transmits the carrier frequency f0/2. Since power for generating a power supply voltage must be efficiently extracted from a received radio wave, the loop antenna coil **301***a* is tuned to a carrier frequency f0 of the received two-phase phase-modulated wave signal.

This carrier frequency for transmission can also be a fraction of an integer multiple, instead of ½, of the carrier frequency of the received two-phase phase-modulated wave signal.

The loop antenna coil **301***a* simply transmits and receives signals, so a single coil can be used for both transmission and reception. However, separate coils can also be used for transmission and reception.

To perform noncontacting data exchange, the one-chip microprocessor **310** incorporates a noncontacting interface circuit **400** for exchanging data via the parallel tuning circuit **301**.

This noncontacting interface circuit **400** includes a power generator **302**, a clock generating circuit (clock generating

means) **307**, a demodulation circuit (demodulating means) **303**, a modulation circuit (modulating means) **304**, and a reset signal generating circuit **308**. The power generator **302** generates power to be supplied to the whole internal circuit of the radio combination card **300** by using the two-phase phase-modulated wave signal from the parallel tuning circuit **301**. The clock generating circuit **307** generates operating clocks from an analog signal received via the parallel tuning circuit **301**. The demodulation circuit **303** converts the analog signal received via the parallel tuning circuit **301** into a digital signal to be read out by the CPU **405** of the one-chip microprocessor **310**. The modulation circuit **304** modulates an oscillation circuit output by using a signal from the CPU **405** and transmits the modulated output from the loop antenna (transmitting) coil **301***a* of the parallel tuning circuit **301**. The reset signal generating circuit **308** generates a reset signal on the basis of the clocks generated by the clock generating circuit **307**.

The radio combination card **300** incorporates a switch (SW) **309** for switching on and off the conduction between the noncontacting interface **400** and the antenna coil **301***a* of the parallel tuning circuit **301**.

This switch (SW) **309** is normally ON (connected) in the initial state and turned off by the CPU **405** when a Vcc voltage is applied from the contact terminal C**1** of the contacting interface **401** to the VCC (normally 5V) terminal.

In this third embodiment, in addition to the switch (SW**1**) **309** described above, switches (SW**2**, SW**3**, SW**4**, and SW**5**) **312**, **313**, **314**, and **315** are connected to the control terminals C**1** (VCC), C**2** (RST), C**3** (CLK), and C**7** (I/O), respectively.

One input terminal of each of these switches (SW**2** to SW**5**) **312** to **315** is connected to a corresponding one of the contact terminals C**1** (VCC), C**2** (RST), C**3** (CLK), and C**7** (I/O).

The other input terminal of the switch (SW**2**) **312** is connected to the power generator **302** of the noncontacting interface **400** so as to receive the Vcc voltage generated by the power generator **302**.

Note that one of the two input terminals of the switch (SW**2**) **312** is enabled by an output from a selector circuit (sel) **320** controlled by the CPU **405**.

Note also that the other input terminal of the switch (SW**2**) **312** is initially so selected by the CPU **405** as to receive the Vcc voltage generated by the power generator **302**.

The other input terminal of the switch (SW**3**) **313** is connected to the reset signal generating circuit **308** of the noncontacting interface **400** so as to receive the reset signal generated by the reset signal generating circuit **308**.

Note that one input terminal of the switch (SW**3**) **313** is enabled by an output from the selector circuit (sel) **320** controlled by the CPU **405**.

Note also that the other input terminal of the switch (SW**3**) **313** is initially so selected by the CPU **405** as to receive the reset signal generated by the reset signal generating circuit **308**.

The other input terminal of the switch (SW**4**) **314** is connected to the clock generating circuit **307** of the noncontacting interface **400** so as to receive the clock signal generated by the clock generating circuit **307**.

Note that one input terminal of the switch (SW**4**) **314** is enabled by an output from the selector circuit (sel) **320** controlled by the CPU **405**.

Note also that the other input terminal of the switch (SW**4**) **314** is initially so selected by the CPU **405** as to receive the clock signal generated by the clock signal generating circuit **307**.

The other input terminal of the switch (SW**5**) **315** is connected to the demodulation circuit (demodulating means) **303** of the noncontacting interface **400**.

Also, one output terminal of this switch (SW**5**) **315** is connected to the modulation circuit (modulating means) **304** of the noncontacting interface **400**.

Note that one input or output terminal of the switch (SW**5**) **315** is enabled by an output from the selector circuit (sel) **320** controlled by the CPU **405** so as to be selectively connected to the output terminal of the demodulation circuit (demodulating means) **303**, the input terminal of the modulation circuit (modulating means) **304**, or the contact terminal C**7** (I/O).

Note also that the switch (SW**5**) **315** is initially connected to the output terminal of the demodulation circuit (demodulating means) **303** and the input terminal of the modulation circuit (modulating means) **304** by the CPU **405**.

The contact terminal C**1** of the contacting interface **401** and the output terminal of the power generator **302** are connected to terminals A and B, respectively, of the CPU **405**. This allows the CPU **405** to check whether the radio combination card **300** is driven by the contacting interface **401** or the noncontacting interface **400** when the CPU **405** performs initialization upon activation of the radio combination card **300**.

The CPU **405** reads out a program for performing initialization stored in the RAM **406** and performs initialization.

The operation of the radio combination card with the above arrangement will be described below with reference to a flow chart shown in FIGS. **6**A and **6**B.

For example, when the card **300** is inserted into a terminal apparatus, the Vcc voltage is applied from the contact terminal C**1** of the contacting interface **401** of the card **300** to the VCC (normally 5V) terminal (ST**1**). Consequently, the switch (SW) **309** is turned off.

When the Vcc voltage is applied from the contact terminal C**1** to the VCC (normally 5V) terminal, the selector circuit (sel) **320** of the card **300** outputs a selection signal "1" to the switches (SW**2**, SW**3**, SW**4**, and SW**5**) **312**, **313**, **314**, and **315** so as to selectively connect the contact terminals C**1** (VCC), C**2** (RST), C**3** (CLK), and C**7** (I/O), respectively (ST**101**).

After that, the CLK terminal C**3** and the RST terminal C**2** supply the clock signal and the reset signal, respectively (ST**2** and ST**3**), and the CPU **405** starts initialization (ST**102**).

In this initialization, the CPU **405** detects the states of the input terminals A and B and checks whether the radio combination card **300** is activated by the contacting interface **401** or the noncontacting interface **400** (ST**103**).

If the input terminal A is "1" and the input terminal B is "0", the card **300** is activated by the noncontacting interface **400**.

If the input terminal A is "0" and the input terminal B is "1", the card **300** is activated by the contacting interface **401**.

If both of the input terminals A and B are "0" or "1", an operation error has occurred.

If this error is detected, the CPU **405** stops the operation.

Since the card **300** is driven by the contacting interface **401**, the CPU **405** holds the states of the input terminals A and B in a predetermined area of the RAM **409** (ST**104**).

That is, the CPU **405** stores (1,0) in the predetermined area of the RAM **409** if the card **300** is activated by the

noncontacting interface **400**, and stores (0,1) in this area if the card **300** is activated by the contacting interface **400**.

Next, on the basis of the information stored in the RAM **309**, the CPU **405** checks whether the card **300** is activated by the contacting interface **401**, i.e., whether the pattern stored in the RAM **409** is (0,1) (ST**105**).

If the card **300** is activated by the contacting interface **401** and the pattern in the predetermined area of the RAM **409** is (0,1), the CPU **405** outputs a selection signal for turning off the switch (SW1) **309** (ST**106**).

The switch (SW1) **309** is turned off by this selection signal.

This selection signal is also supplied to the selector circuit (sel) **320** and so controls the selector circuit (sel) **320** that the switches (SW2, SW3, SW4, and SW5) **312**, **313**, **314**, and **315** keep selecting the contact terminals C1 (VCC), C2 (RST), C3 (CLK), and C7 (I/O), respectively (ST**106**).

In this manner, the selector circuit (sel) **320** causes the switches (SW2, SW3, SW4, and SW5) **312**, **313**, **314**, and **315** to keep selecting the contact terminals C1 (VCC), C2 (RST), C3 (CLK), and C7 (I/O), respectively. After that, a command is received from the terminal apparatus via the I/O port, and contacting data exchange is performed via the I/O port in accordance with the command.

That is, while contacting data exchange is performed, the switch (SW1) **309** is kept OFF, and the switches (SW2, SW3, SW4, and SW5) **312**, **313**, **314**, and **315** keep selecting the contact terminals C1 (VCC), C2 (RST), C3 (CLK), and C7 (I/O), respectively. Accordingly, even if the receiving antenna coil **301***a* of the parallel tuning circuit **301** receives some radio waves while contacting data exchange or contacting driving is performed, the radio combination card **300** does not cause any operation error, so the contacting driving or contacting data exchange is kept performed.

On the other hand, if the card **300** is driven by the noncontacting interface **400**, the switch (SW1) **309** is normally ON (connected). Therefore, the receiving antenna coil **301***a* of the parallel tuning circuit **301** receives radio waves (ST**201**), and the power generator **302**, the clock generating circuit (clock generating means) **307**, the demodulation circuit (demodulating means) **303**, the modulation circuit (modulating means) **304**, and the reset signal generating circuit **308** operate (ST**202**).

When the power generator **302** applies a voltage, the selector circuit (sel) **320** outputs a selection signal "0" (ST**202**).

The switches (SW2, SW3, SW4, and SW5) **312**, **313**, **314**, and **315** initially connect to the power generator **302**, the clock generating circuit (clock generating means) **307**, the demodulation circuit (demodulating means) **303**, the modulation circuit (modulating means) **304**, and the reset signal generating circuit **308**, respectively. The selection signal "0" does not change the states of these switches (SW2 to SW5) **312** to **315**.

After that, the clock generating circuit (clock generating means) **307** and the reset signal generating circuit **308** supply the clock signal and the reset signal, respectively, and the CPU **405** starts initialization (ST**102**).

In this initialization, the CPU **405** detects the states of the input terminals A and B and checks whether the radio combination card **300** is activated by the contacting interface **401** or the noncontacting interface **400** (ST**103**).

Since the card **300** is activated by the noncontacting interface **400**, the CPU **405** stores the states of the input terminals A and B as (1,0) in the predetermined area of the RAM **409** (ST**103**).

Next, on the basis of the information stored in the RAM **309**, the CPU **405** checks whether the card **300** is activated by the contacting interface **401** or the noncontacting interface **400** (ST**105** and ST**107**).

If the card **300** is activated by the noncontacting interface **400** and the pattern in the predetermined area of the RAM **409** is (1,0) (ST**106**), the CPU **405** outputs a selection signal "0" to the selector circuit (sel) **320** and the switch (SW1) **309** (ST**108**).

This selection signal "0" holds the initial states of the individual switches.

After that, the switches (SW2, SW3, SW4, and SW5) **312**, **313**, **314**, and **315** selectively connect to the power generator **302**, the clock generating circuit (clock generating means) **307**, the demodulation circuit (demodulating means) **303**, the modulation circuit (modulating means) **304**, and the reset signal generating circuit **308**. That is, these switches (SW2 to SW5) **312** to **315** are connected to the noncontacting interface **400**.

The CPU **405** completes the initialization in steps ST**102** to ST**108** described above.

In this initialization, the CPU **405** also checks the hardware such as the ROM **406**, the RAM **409**, and the EEPROM **407**.

When the initialization is complete, the card **300** can exchange data with an external apparatus.

When the card **300** is driven by the contacting interface **401**, the external apparatus (reader·writer) cancels the reset signal applied to the contact terminal C2 after 40,000 clocks are supplied to the contact terminal C3.

Analogously, the reset signal generating circuit **308** cancels the reset signal after a predetermined number of clocks are supplied by the clock generating circuit **307**.

When the reset signal applied to the contact terminal C2 or the reset signal from the reset signal generating circuit **308** is canceled, the CPU **405** outputs an initial response signal (ATR) to the external apparatus (reader·writer) via the selected one of the contacting interface **401** and the noncontacting interface **400**.

This initial response signal (ATR) from the card **300** enables the external apparatus (reader·writer) to exchange commands with the card **300**, so the apparatus transmits a command to the card **300**.

The card **300** receives this command via the currently selected one of the contacting interface **401** and the noncontacting interface **400** (ST**110**).

When the command is received, the CPU **405** compares the states of the input terminals A and B with the pattern (initial state) stored in the RAM **409** (ST**111**).

If the states of the input terminals A and B match the pattern (initial state) stored in the RAM **409** (ST**112**), the CPU **405** executes the received command and outputs the processing result to the external apparatus (ST**113**).

After that, the card and the external apparatus similarly exchange commands and data.

If there is neither invalid attempt nor operation error from the external apparatus, the states of the input terminals A and B and the pattern (initial state) stored in the RAM **409** must match. Therefore, if the states of the input terminals A and B are different from the pattern (initial state) stored in the RAM **409**, the CPU **405** outputs an error signal and stops the operation (ST**114**).

A signal received by the receiving antenna coil **301***a* of the parallel tuning circuit **301** is converted into a digital

signal by the demodulation circuit (demodulating means) **303** and supplied to the CPU **405** via the UART (I/O) **408**. The CPU **405** appropriately processes the signal and stores the processed signal in the RAM **409** or the like where necessary.

Also, a signal to be transmitted to the terminal is output from the UART (I/O) **408** to the modulation circuit **304** and transmitted from the antenna coil of the parallel tuning circuit **301** by modulating the output from the clock generating circuit **307**.

In this way, noncontacting data exchange is performed.

In this embodiment, when performing initialization, the CPU **405** detects the states of the input terminals A and B and checks whether the radio combination card **300** is activated by the contacting interface **401** or the noncontacting interface **400**. The CPU **405** holds the result in the RAM **409**.

While the card and a terminal apparatus are exchanging information, the CPU **405** compares the states of the input terminals A and B with the pattern held in the RAM **409** to check whether the states change.

If the states of the input terminals A and B match the pattern held in the RAM **409**, the CPU **405** determines that the operation is normal. However, if the states of the input terminals A and B are different from the pattern held in the RAM **409**, it is expected that some operation error has occurred. Therefore, the CPU **405** outputs an error response to the terminal apparatus and stops the operation.

Note that when the switches (SW2, SW3, SW4, and SW5) **312**, **313**, **314**, and **315** initially select the contact terminals C1 (VCC), C2 (RST), C3 (CLK), and C7 (I/O), respectively, a similar operation can be performed by using an inverted signal of an output signal from the selector circuit (sel) **320** as a selection signal as shown in FIG. **7**.

As described above, the third embodiment includes an inhibiting means for inhibiting the operation of the noncontacting interface **400** while the card **300** is driven by the contacting interface **401**. Hence, no operation error occurs even if electric waves are radiated in the environment while information is exchanged via the contacting interface **401**.

Also, the above third embodiment includes a means for cutting off the conduction between the noncontacting interface **400** and the antenna coil **301***a* of the parallel tuning circuit **301**. Accordingly, no operation error occurs even if electric waves are radiated in the environment while information is exchanged via the contacting interface **401**.

Furthermore, in the above third embodiment, the noncontacting interface **400** of the microprocessor **310** includes the power generator **302** which operates in accordance with an output from the parallel tuning circuit **301**, the clock generating circuit (clock generating means) **307**, the demodulation circuit (demodulating means) **303**, the modulation circuit (modulating means) **304**, and the reset signal generating circuit **308**. The switch **309** for switching on and off the conduction between the noncontacting interface **400** and the parallel tuning circuit **301** is also included. This switch **309** is turned off when the Vcc voltage is applied via the contacting interface **401**. Therefore, even if electric waves are radiated in the environment while information is exchanged via the contacting interface **401**, the noncontacting interface **400** does not operate at all, so no operation error takes place.

Fourth Embodiment

The fourth embodiment of the present invention will be described below with reference to FIG. **8**.

In this fourth embodiment, the arrangements shown in FIGS. **1** and **2** are similarly applied, and the internal arrangement of a radio combination card **300** partially differs from that shown in FIG. **5**. So, a description of identical portions will be omitted.

That is, as shown in FIG. **8**, a radio combination card **300** incorporates a switch (SW1) **309***a* for switching on and off the conduction between a noncontacting interface **400** and an antenna coil (parallel tuning circuit **301**).

This switch (SW1) **309***a* is normally ON (connected) and turned off when a Vcc voltage is applied from a contact terminal C1 of a contacting interface **401** to a VCC (normally 5V) terminal.

In the fourth embodiment, in addition to this switch (SW1) **309***a*, switches (SW2, SW3, SW4, and SW5) **312***a*, **313***a*, **314***a*, and **315***a* are connected to a power generator **302**, a clock generating circuit (clock generating means) **307**, a demodulation circuit (demodulating means) **303**, a modulation circuit (modulating means) **304**, and a reset signal generating circuit **308**, respectively, of the noncontacting interface **400**.

These switches (SW2 to SW5) **312***a* to **315***a* are normally ON (connected) and turned off when the Vcc voltage is applied from the contact terminal C1 of the contacting interface **401** to the VCC (normally 5V) terminal.

The switches (SW2 to SW5) **312***a* to **315***a* inhibit signal inputs and outputs via the noncontacting interface **400**.

That is, while contacting data exchange or contacting driving is performed, the switches (SW2 to SW5) **312***a* to **315***a* completely inhibit signal inputs and outputs via the noncontacting interface **400** and prevent operation errors.

Additionally, in this fourth embodiment, switches (SW6, SW7, SW8, SW9, and SW10) **316***a*, **317***a*, **318***a*, **319***a*, and **320***a* are connected to the contact terminal C1 (VCC) and other contact terminals C2 (RST), C3 (CLK), and C7 (I/O), respectively, of the contacting interface **401**.

These switches (SW6 to SW10) **316***a* to **320***a* are normally ON (connected) and turned off when the Vcc voltage is applied from the power generator **302** of the noncontacting interface **400**.

The switches (SW6 to SW10) **316***a* to **320***a* inhibit signal inputs and outputs via the contacting interface **401**.

That is, while noncontacting data exchange or noncontacting driving is performed, the switches (SW6 to SW10) **316***a* to **320***a* completely inhibit signal inputs and outputs via the contacting interface **401** and prevent operation errors.

As described above, the fourth embodiment of the present invention includes operation inhibiting means for inhibiting the operation of the noncontacting interface **400** while the card is driven via the contacting interface **401**. Therefore, no operation error occurs even if electric waves are radiated in the environment while information is exchanged via the contacting interface **401**.

Also, the fourth embodiment of the present invention includes a means for cutting off the conduction between the noncontacting interface **400** and the antenna coil (parallel tuning circuit) while the card is driven via the contacting interface **401**. Accordingly, no operation error occurs even if electric waves are radiated in the environment while information is exchanged via the contacting interface **401**.

Furthermore, in the above fourth embodiment, the noncontacting interface **400** of the microprocessor includes the power generator **302** which operates in accordance with an output from the parallel tuning circuit **301**, the clock generating circuit (clock generating means) **307**, the demodulation circuit (demodulating means) **303**, the modulation circuit (modulating means) **304**, and the reset signal generating circuit **308**. A switch for switching on and off the conduction between the noncontacting interface **400** and the parallel tuning circuit **301** is also included. This switch is

turned off when the Vcc voltage is applied via the contacting interface **401**. Therefore, even if electric waves are radiated in the environment while information is exchanged via the contacting interface **401**, the noncontacting interface **400** does not operate at all, so no operation error takes place.

The third and fourth embodiments as described above can be summarized as follows.

(1) A radio combination card having contacting and noncontacting interfaces and driven by the contacting or noncontacting interface comprises a selective connecting means for selectively connecting one of the contacting and noncontacting interfaces to a control circuit, a determining means for determining whether the card in driven by the contacting or noncontacting interface, and a holding means for causing the selective connecting means to keep connecting one of the contacting and noncontacting interfaces in accordance with a determination result from the determining means, and inhibiting signal inputs and outputs via the other interface.

(2) The selective connecting means initially selectively connects one of the contacting and noncontacting interfaces to the control circuit and switches to the other interface when the card is driven by the other interface, and the holding means maintains the connection to the other interface on the basis of the determination result from the determining means.

(3) There is provided a radio combination card wherein the contact terminals C**1** (VCC), C**2** (RST), C**3** (CLK), and C**7** (I/O) of a contacting interface are connected to a control circuit by the connecting switches (SW**2**, SW**3**, SW**4**, and SW**5**) **312**, **313**, **314**, and **315**, respectively, which are connected to the power generator **302**, the clock generating circuit (clock generating means) **307**, the demodulation circuit (demodulating means) **303**, the modulation circuit (modulating means) **304**, and the reset signal generating circuit **308**, respectively, of a noncontacting interface, one interface is initially selectively connected to the control circuit, initialization is performed by connecting the switches SW**7** to SW**10** to the contacting interface when the Vcc voltage is applied from the contact terminal C**1** to the VCC (normally 5V) terminal and connecting the switches (SW**2** to SW**5**) **312** to **315** to the noncontacting interface when the power generator **302** applies a voltage, and, in this initialization, whether the card is driven by the contacting or noncontacting interface is checked, and the switches (SW**2** to SW**5**) **312** to **315** are kept connected until deactivation.

As described above, the third and fourth embodiments of the present invention can provide a portable electronic device including a composite IC card having contacting and noncontacting interfaces and capable of well maintaining the reliability as a composite IC card by preventing operation errors when driven from either interface, and an IC module for the composite IC card.

Fifth Embodiment

The fifth embodiment of the present invention will be described below with reference to FIGS. **9** to **12**.

Note that in this fifth embodiment, the arrangements shown in FIGS. **1** and **2** are similarly applied.

Note also that in this fifth embodiment, the arrangements shown in FIGS. **5** and **7** and the flow chart shown in FIGS. **6**A and **6**B are also similarly applied.

In this embodiment, a common IC such as a memory is used and a CPU **405** is operated in both contacting and noncontacting responses to an external apparatus.

In this embodiment, therefore, switching is performed between commands executable in contacting and noncontacting responses to an external apparatus, thereby holding the independence of contacting and noncontacting responses while the common memory is used.

That is, a ROM **406** stores subroutine programs for processing various applications and commands. In accordance with a command received from an external apparatus, the CPU **405** reads out a subroutine program from the ROM **406** and executes the program.

A system area of an EEPROM **407** stores command tables (lists) showing the correspondence between commands received from an external apparatus and the subroutine programs in the ROM **406** as various kinds of definition information. Different command tables (lists) are used for contacting and noncontacting responses.

Also, a user area of the EEPROM **407** stores various kinds of transaction information such as outstanding balance data and transaction records.

That is, a command list for a contacting response is set as shown in FIG. **9**, and a command list for a noncontacting response is set as shown in FIG. **10**.

These settings are made by writing the command tables (lists) by the manufacturer or issuer when the card is issued.

The CPU **405** performs processing based on a flow chart as shown in FIG. **12**.

That is, when the card is activated by a contacting interface **401** and a pattern in a predetermined area of a RAM **409** is (0,1), the CPU **405** looks up the command table (list) shown in FIG. **9** (steps S**1** and S**3**).

When the card is activated by a noncontacting interface **400** and the pattern in the predetermined area of the RAM **409** is (1,0), the CPU **405** looks up the command table (list) shown in FIG. **10** (steps S**2** and S**4**).

If either command table (list) contains data corresponding to the received command, the CPU **405** executes a subroutine program in the ROM **406** (steps S**5** and S**6**).

More specifically, when the card is activated by the contacting interface **401**, commands AAA (additional write), BBB (read), CCC (rewrite), DDD (erase), and EEE (addition and change of system data) can be executed. When the card is activated by the noncontacting interface **400**, only the commands AAA (additional write) and BBB (read) are executable. If this is the case, the external apparatus can execute only additional write and read to the user area of the EEPROM **407**.

Accordingly, when this radio combination card **300** is inserted into a terminal apparatus and activated by the contacting interface **401**, it is possible to update (add) data such as prepaid balance and erase unnecessary data.

On the other hand, when the card **300** is activated by the noncontacting interface **400**, i.e., when the card **300** is used in a radio automatic ticket gate, bus fare adjusting machine, or automatic vending machine, it is possible to read out the balance or additionally write the used amount of money as history data, but any other command is inexecutable.

As described above, switching is performed between commands executable in contacting and noncontacting responses to an external apparatus. When used in a noncontacting response, the card is usable in various applications, e.g., not only as a collating medium for simply outputting data but also as a prepaid card.

In the above explanation, different command lists are set for contacting and noncontacting responses. However, a single command table (list) as shown in FIG. **11** can also be used for both contacting and noncontacting responses.

That is, as shown in FIG. **11**, the feasibility of each command in a contacting response and the feasibility of each command in a noncontacting response are held as pieces of flag information in the table. When the card is activated by the contacting interface **401** and the pattern in the predeter-

mined area of the RAM **409** is (0,1), the CPU **405** looks up the feasibility flag of the command in a contacting response.

When the card is activated by the noncontacting interface **400** and the pattern in the predetermined area of the RAM **409** is (1,0), the CPU **405** looks up the feasibility flag of the command in a noncontacting response and checks the feasibility of the command.

That is, the command is executable when the feasibility flag is "1" and inexecutable when the flag is "0".

In the fifth embodiment of the present invention as described above, switching is performed between commands executable in contacting and noncontacting responses to an external apparatus. When used in a noncontacting response, therefore, the card is usable in various applications, e.g., not only as a collating medium for simply outputting data but also as a prepaid card.

Additionally, the fifth embodiment of the present invention described above includes an inhibiting means for inhibiting the operation of the noncontacting interface **400** while the card is driven via the contacting interface **401**. Hence, no operation error occurs even if electric waves are radiated in the environment while information is exchanged via the contacting interface **401**.

Also, the above fifth embodiment includes a means for cutting off the conduction between the noncontacting interface **400** and an antenna coil (parallel tuning circuit) **301**. Accordingly, no operation error occurs even if electric waves are radiated in the environment while information is exchanged via the contacting interface **401**.

Furthermore, in the above fifth embodiment, the noncontacting interface **400** of a microprocessor **310** includes a power generator **302** which operates in accordance with an output from the parallel tuning circuit **301**, a clock generating circuit (clock generating means) **307**, a demodulation circuit (demodulating means) **303**, a modulation circuit (modulating means) **304**, and a reset signal generating circuit **308**. A switch **309** for switching on and off the conduction between the noncontacting interface **400** and the parallel tuning circuit **301** is also included. This switch **309** is turned off when a Vcc voltage is applied via the contacting interface **401**. Therefore, even if electric waves are radiated in the environment while information is exchanged via the contacting interface **401**, the noncontacting interface **400** does not operate at all, so no operation error takes place.

The fifth embodiment of the present invention as described above can be summarized as follows.

(1) A radio combination card having contacting and noncontacting interfaces and driven by the contacting or noncontacting interface comprises a determining means for determining whether the radio combination card is activated by the contacting or noncontacting interface, and a switching means for performing switching between commands executable in contacting and noncontacting responses to an external apparatus.

(2) A CPU monitors the states of input terminals A and B and checks whether the radio combination card **300** is activated by the contacting or noncontacting interface.

If the card **300** is activated by the contacting interface, the CPU looks up a command table (list) for a contacting response. If the card **300** is activated by the noncontacting interface, the CPU looks up a command table (list) for a noncontacting response. If either command table (list) contains data corresponding to the received command, the CPU executes a subroutine program in a ROM. If not, the CPU determines that the command is inexecutable.

The fifth embodiment of the present invention as has been described in detail above can provide a portable electronic device including a composite IC card having contacting and noncontacting interfaces, capable of being used for various purposes by executing equivalent functions when driven in both contacting and noncontacting manners and achieving a satisfactory security function, and also capable of well maintaining the reliability as a composite IC card by preventing operation errors when driven from either interface.

Additional embodiments of the present invention will be apparent to those skilled in the art from consideration of the specification and practice of the present invention disclosed herein. It is intended that the specification and examples be considered as exemplary only, with the true scope of the present invention being indicated by the following claims.

What is claimed is:

1. A portable electronic device which has contacting and noncontacting interfaces and a control circuit connected to said contacting and noncontacting interfaces, and is driven by said contacting or noncontacting interface, comprising:

detecting means for detecting whether said portable electronic device is driven by via said contacting or noncontacting interface;

switching means for switching commands executable by said portable electronic device on the basis of the detection result from said detecting means; and

a table storing lists of commands executable when said detecting means detects that said portable electronic device is driven by said contacting interface and commands executable when said detecting means detects that said portable electronic device is driven by said noncontacting interface,

wherein said switching means determines on the basis of the detection result from said detection means whether a command received from an external apparatus can be executed by looking up said table.

2. A device according to claim **1**, wherein said switching means permits execution of data rewrite and erase commands if said detecting means detects that said portable electronic device is activated by said contacting interface, and inhibits execution of the data rewrite and erase commands if said detecting means detects that said portable electronic device is activated by said noncontacting interface.

3. A device according to claim **1**, wherein said switching means permits execution of data erase commands if said detecting means detects that said portable electronic device is activated by said contacting interface, and inhibits execution of the data erase commands if said detecting means detects that said portable electronic device is activated by said noncontacting interface.

4. A device according to claim **1**, wherein said switching means permits execution of data rewrite commands if said detecting means detects that said portable electronic device is activated by said contacting interface, and inhibits execution of the data rewrite commands if said detecting means detects that said portable electronic device is activated by said noncontacting interface.

* * * * *