Trials@uspto.gov
571-272-7822

Paper 45
Date: September 29, 2025

UNITED STATES PATENT AND TRADEMARK OFFICE

BEFORE THE PATENT TRIAL AND APPEAL BOARD

COMCAST CABLE COMMUNICATIONS, LLC,
Petitioner,

v.

ENTROPIC COMMUNICATIONS, LLC,
Patent Owner.

IPR2024-00435
Patent 11,381,866 B2

Before MICHELLE N. WORMMEESTER, JON M. JURGOVAN, and FREDERICK C. LANEY, *Administrative Patent Judges*.

WORMMEESTER, *Administrative Patent Judge*.

JUDGMENT
Final Written Decision
Determining All Challenged Claims Unpatentable
35 U.S.C. § 318(a)

Comcast, Ex. 1091
Comcast v. Entropic
IPR2025-00180

I. INTRODUCTION

Comcast Cable Communications, LLC ("Petitioner") filed a Petition (Paper 2, "Pet.") requesting *inter partes* review of claims 1–82 of U.S. Patent No. 11,381,866 B2 (Ex. 1001, "the '866 patent"). Entropic Communications, LLC ("Patent Owner") filed a Preliminary Response (Paper 10). Pursuant to 35 U.S.C. § 314, we instituted an *inter partes* review of all challenged claims based on all asserted challenges in the Petition. Paper 13 ("Inst. Dec."). Thereafter, Patent Owner filed a Response (Paper 23, "PO Resp.") to the Petition, Petitioner filed a Reply (Paper 28, "Pet. Reply"), and Patent Owner filed a Sur-reply (Paper 33, "PO Sur-reply"). On July 18, 2025, we conducted an oral hearing. A copy of the transcript (Paper 42) is in the record.

We have jurisdiction under 35 U.S.C. § 6(b). This Final Written Decision is issued pursuant to 35 U.S.C. § 318(a). For the reasons that follow, we determine that Petitioner has shown by a preponderance of the evidence that claims 1–82 of the '866 patent are unpatentable.

II. BACKGROUND

A. Related Proceedings

The parties identify various federal district court cases and petitions for *inter partes* review. *See* Pet. vii–viii; Paper 4, 1–4 (Patent Owner's Mandatory Notices); Paper 27, 1–2 (Patent Owner's Third Updated Mandatory Notices).

B. The '866 Patent

The '866 patent describes "wideband receiver systems that are capable of receiving multiple desired television channels that extend over multiple non-contiguous portions of the broad frequency spectrum and grouping them into a contiguous, or substantially-contiguous, frequency spectrum." Ex. 1001, 1:29–34. To illustrate one embodiment, Figure 2 of the '866 patent is reproduced below.

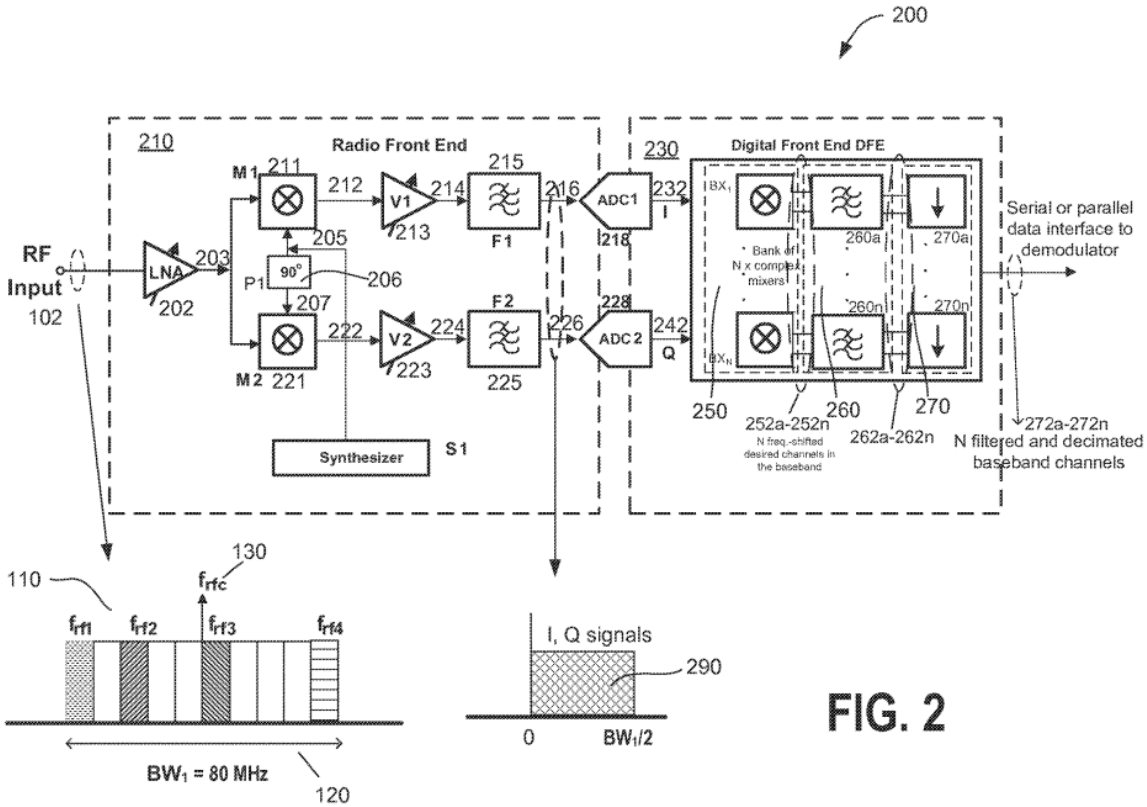

FIG. 2

Figure 2 is a block diagram of wideband receiver system 200 that includes radio front end 210, analog-to-digital convertors 218 (ADC1) and 228 (ADC2), and digital front end 230. *Id.* at 4:35–38, 5:33–35, Fig. 2. System 200 receives and processes channels 110, which are located in a radio frequency (RF) spectrum with frequency bandwidth 120 (BW1). *Id.* at 2:13–15, 4:38–42. There are ten available channels in bandwidth 120,

where each channel occupies 8 MHz of bandwidth for a total of 80 MHz. *Id.* at 4:42–45. Of these available channels, there are four desired channels with respective carrier frequencies f_{rf1}, f_{rf2}, f_{rf3}, and f_{rf4} that are located in noncontiguous portions of bandwidth 120. *Id.* at 4:47–51.

Radio front end 210 is a wideband tuner receiver that includes low noise amplifier 202 (LNA), mixers 211 (M1) and 221 (M2), amplifiers 213 (V1) and 223 (V2), as well as filters 215 (F1) and 225 (F2). Ex. 1001, 4:38–5:32. Digital front end 230 includes N complex mixers 250, where N is the number of desired channels located in the noncontiguous portions of bandwidth 120. *Id.* at 5:51–55, Fig. 2. In Figure 2, N represents four desired RF channels. *Id.* at 5:63–65. Digital front end 230 also includes filter modules 260a–260n and demodulators 270a–270n. *Id.* at 6:6–12, Fig. 2.

In operation, radio front end 210's low noise amplifier 202 receives RF input signal 102, which includes the four desired RF channels. Ex. 1001, 4:45–51. Mixers 211 and 221 multiply (mix) amplified RF signal 203 with respective first oscillator frequency signal 205 and second oscillator frequency signal 207 to generate in-phase signal 212 and quadrature signal 222, which have a phase shift of ninety degrees between them. *Id.* at 4:61–66. Signals 212 and 222 are further amplified by respective amplifiers 213 and 223 to generate signals 214 and 224, which are then filtered by respective filters 215 and 225 to generate filtered in-phase signal 216 and filtered quadrature signal 226. *Id.* at 5:17–20, Fig. 2.

After being processed in radio front end 210, filtered signals 216 and 226 are digitized for further processing in digital front end 230. Ex. 1001, 5:20–24. ADC1 218 generates digital in-phase signal 232 (I), which is a

digital representation of analog filtered signal 216, and ADC2 228 generates digital quadrature signal 242 (Q), which is a digital representation of analog filtered signal 226. *Id.* at 5:48–51.

In digital front end 230, each complex mixer 250 receives digital signals 232 and 242 from ADC1 218 and ADC2 228 to extract a different desired channel, and then frequency-shifts (downshifts) the extracted signal to the baseband frequency. Ex. 1001, 6:3–6, 6:53–56. Frequency-shifted channels 252a–252n are filtered by associated filter modules 260a–260n. *Id.* at 6:6–8. Next, filtered channels 262a–262n are decimated and sent to associated demodulators 270a–270n that extract the original information transmitted in each desired channel. *Id.* at 6:8–14. The decimated baseband channels may be sent as a serial or parallel digital data stream to a demodulator using a serial or parallel data interface. *Id.* at 7:10–14, Fig. 2.

According to the ’866 patent, its approach “eliminates the need of expensive data conversion, filtering and channel selection on the demodulator side,” and “removes undesired channels from the signal path at an early stage, thus reliev[ing] the large dynamic range requirement in the demodulator.” Ex. 1001, 7:14–19.

C. Illustrative Claims

Petitioner challenges claims 1–82 of the ’866 patent. Claims 1, 14, 27, 41, 55, and 69 are independent. Claims 1 and 14 are reproduced below.

1. A cable television (TV) device comprising:

   a wideband analog-to-digital converter (ADC) configured to digitize a contiguous band of frequencies in an input signal, wherein the contiguous band of frequencies comprises a plurality of desired channels and a plurality of undesired channels; and

a digital frontend (DFE) coupled to the wideband ADC, wherein the DFE is configured to concurrently select and provide each of the plurality of desired channels, via a serial interface, without providing any of the plurality of undesired channels.

14. A cable TV device comprising:

a wideband analog-to-digital converter (ADC) configured to digitize an input signal, wherein the input signal comprises a plurality of desired channels and a plurality of undesired channels; and

a plurality of digital down converters coupled to the wideband ADC, wherein each digital down converter, of the plurality of digital down converters, is operable to generate a digital channel output corresponding to each desired channel, of the plurality of desired channels, and wherein the plurality of digital down converters is operable to provide each digital channel output via serial interface.

Ex. 1001, 12:15–25, 13:11–24.

D. Asserted Challenges to Unpatentability

Petitioner asserts the following eight challenges to claims 1–82 of the ’866 patent. Pet. 10–12, 19–80. We instituted *inter partes* review on each challenge. Inst. Dec. 31–32.

Claim(s) Challenged	35 U.S.C. §	Reference(s)/Basis
1, 3–7, 9, 11, 13, 14, 16–20, 22, 24, 26, 27, 29–33, 35–37, 40, 41, 43–47, 49–51, 54	102[1]	Zhang[2]
1, 3–7, 9, 11, 13, 14, 16–20, 22, 24, 26, 27, 29–33, 35–37, 40, 41, 43–47, 49–51, 54	103(a)	Zhang
9–12, 22–25, 27, 29–33, 35–41, 43–47, 49–55, 57–61, 63–69, 71–75, 77–82	103(a)	Zhang, Reisman[3]
2–6, 15–19, 28–32, 42–46	103(a)	Zhang, Jackson[4]
28–32, 42–46, 56–60, 70–74	103(a)	Zhang, Reisman, Jackson
1, 3–9, 11, 13, 14, 16–22, 24, 26, 34–36, 48–50	103(a)	Zhang, Pandey[5]
9–12, 22–25, 34–36, 48–50, 62–64, 76–78	103(a)	Zhang, Reisman, Pandey
2–6, 15–19	103(a)	Zhang, Pandey, Jackson

In support of its challenges, Petitioner relies on a Declaration of David B. Lett (Ex. 1002) and a Reply Declaration of David B. Lett (Ex. 1078). Patent Owner relies on a Declaration of Samuel H. Russ, Ph.D. (Ex. 2009).

[1] The Leahy-Smith America Invents Act ("AIA"), Pub. L. No. 112-29, 125 Stat. 284 (2011), amended 35 U.S.C. §§ 102 and 103, effective March 16, 2013. Because the application from which the '866 patent issued claims priority to an application filed before this date, the pre-AIA versions of §§ 102 and 103 apply.
[2] Zhang et al., U.S. Publ'n No. 2003/0056221 A1, published Mar. 20, 2003 (Ex. 1013).
[3] Reisman, U.S. Publ'n No. 2003/0229900 A1, published Dec. 11, 2003 (Ex. 1052).
[4] Jackson et al., U.S. Publ'n No. 2009/0113504 A1, published Apr. 30, 2009 (Ex. 1057).
[5] Pandey et al., U.S. Patent No. 7,237,214 B1, issued June 26, 2007 (Ex. 1014).

Transcripts of the depositions of Mr. Lett (Ex. 2018, Ex. 2019, Ex. 2021) and Dr. Russ (Ex. 1079) also are in the record.

III. DISCUSSION

A. Claim Construction

In an *inter partes* review proceeding, we construe a claim of a patent "using the same claim construction standard that would be used to construe the claim in a civil action under 35 U.S.C. 282(b)." *See* 37 C.F.R. § 42.100(b). That standard involves construing claims in accordance with the ordinary and customary meaning of such claims as would have been understood by a person of ordinary skill in the art ("POSITA") and the prosecution history pertaining to the patent. *See id.*; *Phillips v. AWH Corp.*, 415 F.3d 1303, 1312–14 (Fed. Cir. 2005) (en banc).

Petitioner asserts that "[a]ll claim terms herein should be given their ordinary and customary meaning to a POSITA." Pet. 16. Patent Owner does not respond. *See* PO Resp. For purposes of this Decision, we determine that no claim term requires express interpretation to resolve any controversy in this proceeding. *See Vivid Techs., Inc. v. Am. Sci. & Eng'g, Inc.*, 200 F.3d 795, 803 (Fed. Cir. 1999).

B. Asserted Challenges Based on Zhang Alone

Petitioner asserts that claims 1, 3–7, 9, 11, 13, 14, 16–20, 22, 24, 26, 27, 29–33, 35–37, 40, 41, 43–47, 49–51, and 54 of the '866 patent are anticipated by Zhang. Pet. 19–49. Petitioner also asserts that these claims would have been obvious over Zhang. *Id.* Patent Owner disputes certain aspects of Petitioner's analysis. PO Resp. 4–45. For the reasons explained

below, we determine that Petitioner has demonstrated by a preponderance of the evidence that claims 1, 3–7, 9, 11, 13, 14, 16–20, 22, 24, 26, 27, 29–33, 35–37, 40, 41, 43–47, 49–51, and 54 are anticipated by Zhang or would have been obvious over Zhang.

Before addressing the parties' arguments, we provide an overview of Zhang.

1. Overview of Zhang

Zhang describes demodulator circuits in broadband communications. Ex. 1013 ¶ 4. To illustrate one embodiment, Figure 2 of Zhang is reproduced below.

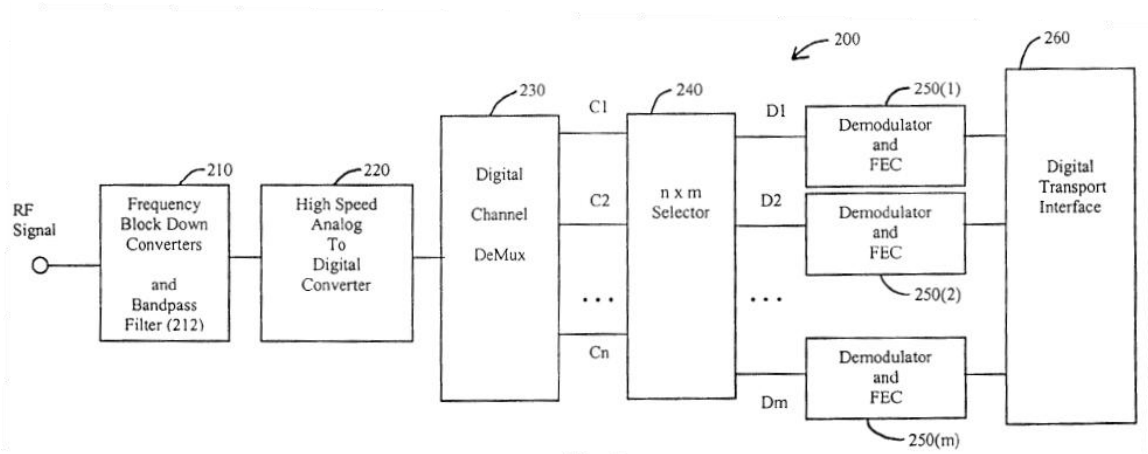

Fig. 2

Figure 2 is a diagram of multi-channel demodulator 200. *Id.* ¶ 23. Frequency-block down-converter 210 receives a multi-channel analog RF signal that can come from any of various sources such as satellite systems, terrestrial TV systems, and cable systems. *Id.* Down-converter 210 downshifts the multi-channel analog RF signal to a lower frequency band. *Id.* ¶ 25. Analog-to-digital converter 220 then converts the down-converted multi-channel analog RF signal to a multi-channel digital RF signal. *Id.*

¶ 27. Digital channel demultiplexer 230 demultiplexes the digital RF signal into separate digital RF channels C_1 to C_n. *Id.* ¶ 28. Digital selector 240 receives the demultiplexed digital RF channels and selects one or more of RF channels D_1 to D_m from one or more of digital RF channels C_1 to C_n. *Id.* The m selected RF channels are fed into respective demodulators 250(1) to 250(m), where they are demodulated. *Id.* ¶ 29. The selected RF channels D_1 to D_m then feed into digital transport interface 260. *Id.*

We turn now to the claims, starting with independent claims 1, 14, 27, and 41.

2. Independent Claim 1

Claim 1 is directed to a "cable television (TV) device" comprising a "wideband analog-to-digital converter (ADC)" and a "digital frontend (DFE)." Petitioner designates the preamble as element 1A and the recited limitations as elements 1B and 1C. We address these elements, beginning with Petitioner's arguments and then turning to the parties' dispute.

a. Element 1A: "cable television (TV) device"

Claim 1 recites as its preamble "[a] cable television (TV) device." Petitioner asserts that "Zhang describes an RF receiver, for example in a [set-top box], receiving digital video channels over a cable system and having DOCSIS return channel, which the '866 patent concedes is a protocol for 'cable networks that carry TV programs.'" Pet. 20 (citing Ex. 1013 ¶¶ 5–6, 23–25, 29, 41, 45–47; Ex. 1001, 9:4–8).

Patent Owner does not specifically dispute Petitioner's contentions regarding the preamble. *See* PO Resp. Although we do not determine

whether the preamble is limiting, we are persuaded by Petitioner's argument and evidence that Zhang teaches the subject matter of the preamble.

b. Element 1B: "wideband analog-to-digital converter (ADC)"

Claim 1 further recites "a wideband analog-to-digital converter (ADC) configured to digitize a contiguous band of frequencies in an input signal, wherein the contiguous band of frequencies comprises a plurality of desired channels and a plurality of undesired channels." For this limitation, Petitioner provides an annotated version of Figure 2 of Zhang, reproduced below. Pet. 21.

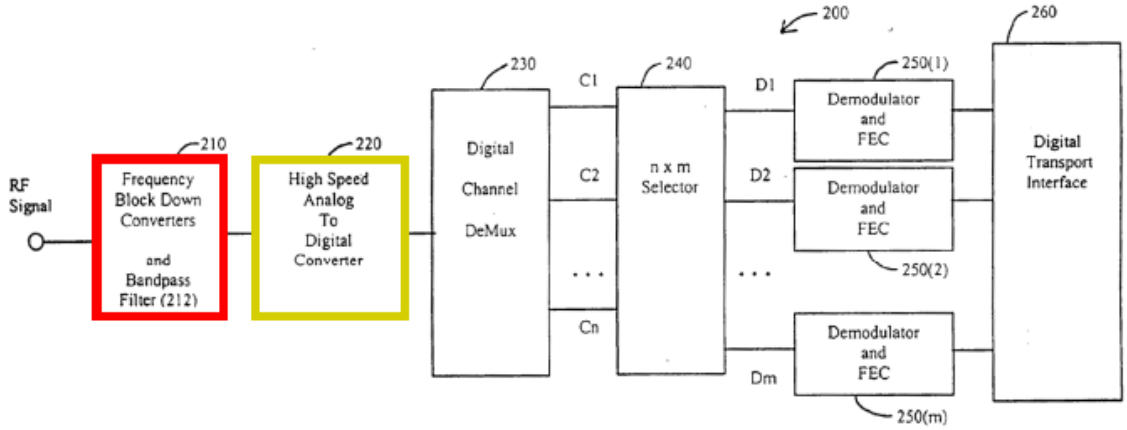

Ex. 1013, Fig. 2 (annotated)

Figure 2 of Zhang, as annotated by Petitioner, is a diagram of multi-channel demodulator 200. *See* Ex. 1013 ¶ 23. Petitioner contends "Zhang discloses the claimed 'wideband analog-to-digital converter' as ADC 220 (**gold**), which digitizes a multi-channel analog RF signal received from Frequency Block Downconverter 210 (**red**)." Pet. 21 (citing Ex. 1013, code (57), ¶¶ 10, 25, 27, 31, 34, 44–45).

Petitioner further contends "Zhang's ADC is wideband because the digitized multi-channel RF signal includes several channels," and "the

channels form a contiguous band of frequencies because (like the '866 patent) they are spaced next to each other within a frequency band with a precise frequency spacing (e.g., 6 MHz) that is a fraction of the multi-channel RF signal bandwidth (e.g., 540–750 MHz divided into 35 channels)." Pet. 21–22 (citing Ex. 1001, 1:24–27, 2:50–59; Ex. 1013 ¶¶ 6, 10, 24–25, 27, 41–42, 47). Petitioner adds, "Zhang further discloses that in alternate variations, 'RF channels need not be contiguous,' teaching that in the embodiments otherwise described, the RF channels are contiguous." *Id.* at 22 (quoting Ex. 1013 ¶ 48).

Lastly, Petitioner contends "[t]he digitized multi-channel RF signal includes target RF channels that are selected and demodulated in subsequent stages (claimed 'desired channels'), and undesired RF channels that are filtered out (claimed 'undesired channels')." Pet. 22 (citing Ex. 1013 ¶¶ 5, 10–12, 27–29, 31–32, 35–36, 41–42).

Patent Owner does not specifically dispute Petitioner's contentions regarding claim element 1B. *See* PO Resp. Nonetheless, the burden remains on Petitioner to demonstrate unpatentability. *See Dynamic Drinkware, LLC v. Nat'l Graphics, Inc.*, 800 F.3d 1375, 1378 (Fed. Cir. 2015). Based on Petitioner's argument and evidence, we find that Zhang teaches the recited wideband analog-to-digital converter of claim element 1B. *See* Pet. 21–22.

c. Element 1C: "digital frontend (DFE)"

Claim 1 further recites "a digital frontend (DFE) coupled to the wideband ADC, wherein the DFE is configured to concurrently select and provide each of the plurality of desired channels, via a serial interface, without providing any of the plurality of undesired channels." For this

limitation, Petitioner provides another annotated version of Figure 2 of Zhang, reproduced below. Pet. 23.

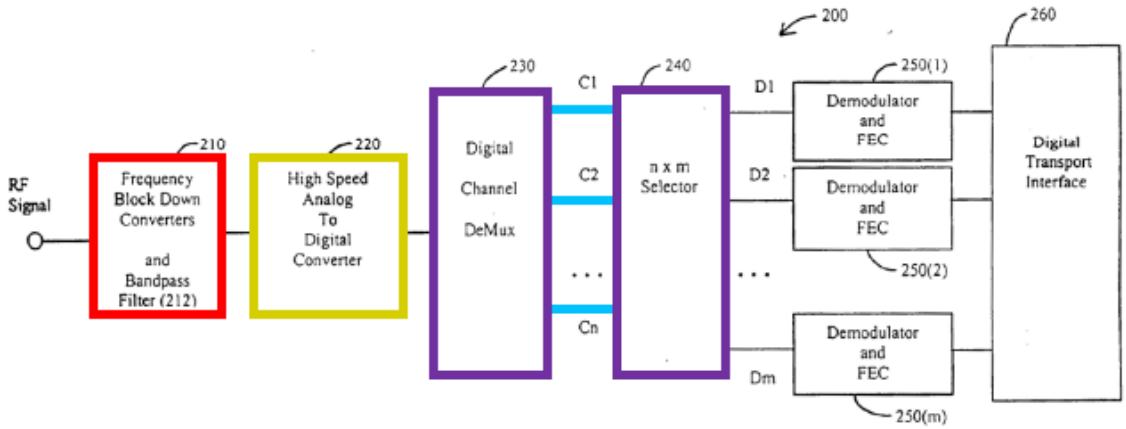

Fig. 2

Ex. 1013, Fig. 2 (annotated)

Figure 2 of Zhang, as annotated by Petitioner, is a diagram of multi-channel demodulator 200. *See* Ex. 1013 ¶ 23. Petitioner contends "Zhang teaches the claimed 'digital frontend (DFE)' as Digital Channel Demultiplexer 230 and a portion of Digital Selector 240 (**purple**) . . . , which are coupled to ADC 220." Pet. 22–23 (citing Ex. 1013 ¶ 28).

Petitioner asserts that Zhang's "demultiplexer 230 . . . includ[es] multiple signal paths for concurrently selecting and providing a plurality of desired channels C_1–C_n (**light blue**)." Pet. 23 (citing Ex. 1013 ¶¶ 30–34, Fig. 3). Petitioner further asserts that "[e]ach path receives the multi-channel digital RF signal from ADC 220 and operates concurrently to select one respective desired channel," and that "selector 240 provides 'm' channels D_1–D_m selected from any or all of channels C_1–C_n (**light blue**) for demodulation." *Id.* at 23–24 (citing Ex. 1013 ¶¶ 5, 28, 31, 38–39, 47); *see also* Ex. 1013 ¶ 28 (explaining that "digital channel demultiplexer 230 . . . demultiplexes the multi-channel digital RF signal into separate digital RF channels C_1 to C_n" and "selector 240 receives the demultiplexed digital RF

channels C_1 to C_n and then selects one or more of the RF channels D_1 to D_m from one or more of the digital RF channels C_1 to C_n"). In this way, according to Petitioner, Zhang's "[d]emultiplexer 230 and selector 240 output only user selected channels (either all or a subset of the user selected 'C' channels) and filter out all other channels from the digitized multi-channel RF signal." *Id.* at 24 (citing Ex. 1013 ¶¶ 28, 32, 39, 47).

Petitioner adds, "Selector 240 further provides the desired channels 'via a serial interface.'" Pet. 24. To illustrate, Petitioner provides an annotated version of Figure 5 of Zhang, reproduced below. *Id.* at 25.

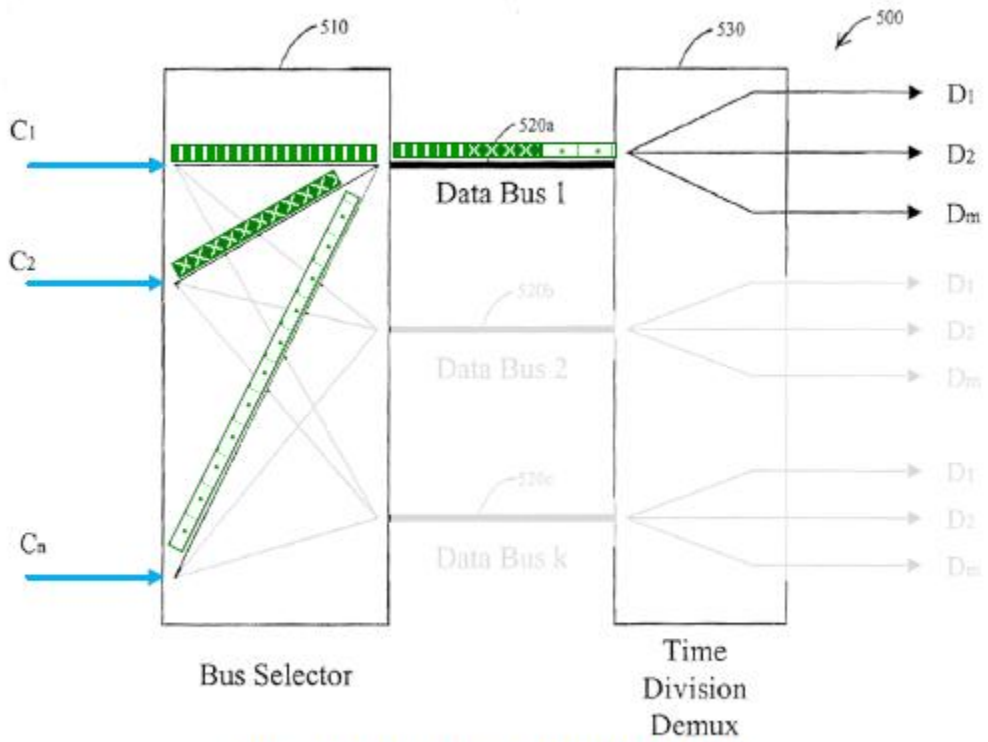

Ex. 1013, Fig. 5 (annotated)

Figure 5 of Zhang, as annotated by Petitioner, is a diagram of n×m digital selector 500, which may be used to implement digital selector 240 of Figure 2. *See* Ex. 1013 ¶ 38. Petitioner asserts that "[s]elector 240 with 'one' bus (e.g., Data bus 1) receives channels C_1 to C_n from

demultiplexer 230 (represented by green blocks with different patterns) and sends them across the bus 'with the use of time division multiplexing.'" Pet. 25 (citing Ex. 1013 ¶¶ 38–39). According to Petitioner, "[a] POSITA would have understood that this sends different channels sequentially (serially) in different time divisions over a single data path as shown, and that such a path is a 'serial interface.'" *Id.* Petitioner relies on the declaration testimony of Mr. Lett to support its position. *Id.* at 24–26 (citing Ex. 1002 ¶¶ 112–116).

Under an alternative theory, Petitioner contends that, "[t]o the extent Zhang does not disclose a serial interface, implementing Zhang's circuitry to output the selected channels via a serial interface was obvious in light of the POSITA's general knowledge, creativity, and common sense as one of two common design choices that were well-known in integrated circuits at the time." Pet. 26–27. Petitioner relies on the declaration testimony of Mr. Lett to support this position. *Id.* (citing Ex. 1002 ¶¶ 117–119).

Patent Owner makes several arguments regarding claim element 1C, which we address below.

d. The Parties' Dispute

Patent Owner argues "the '866 patent outputs desired channels by selecting and down converting only the desired channels from the digitized input RF signal," whereas "Zhang does not select, down convert or extract only the desired channels from the digitized RF input signal." PO Resp. 5–6. According to Patent Owner, "Zhang down converts and extracts ***all*** channels, ***both*** desired and undesired, from the digitized input RF signal, and only later selects the desired channels from the extracted channels." *Id.* at 4;

see also id. at 7 (quoting Ex. 2009 ¶¶ 35–37 ("Unlike the '866 patent, however, Zhang's method . . . down converts and extracts from the digitized RF input signal ***all*** channels C_1–C_n, ***both*** desired ***and*** undesired, in the Digital Channel DeMux 230. . . . Once both desired and undesired channels C_1–C_n are down converted and extracted from the digitized input signal, the digital channel selector 240 . . . selects the desired channels and outputs them to demodulators.")).

Petitioner counters that claim 1 "allow[s] for the selection of undesired channels" and "requires only that undesired channels not be 'provid[ed]' to the demodulator." Pet. Reply 5–6; *see also id.* at 16 ("While element [1C] excludes 'providing' undesired channels, no such limitation appears with respect to 'selecting' undesired channels."). Petitioner further emphasizes that its "Petition asserted that Zhang's digital demultiplexer 230 in combination with part of digital selector 240 is '*a digital frontend (DFE) coupled to the wideband ADC*,'" where "[t]he input of the relied-upon combined digital circuit is undisputedly coupled to Zhang's ADC 220, and the output provides D_1 to D_m, which are undisputedly desired channels." *Id.* at 6.

We agree with Petitioner. Claim 1 recites "the DFE is configured to concurrently select and provide each of the plurality of desired channels . . . without providing any of the plurality of undesired channels." The claim expressly covers both selecting desired channels and providing desired channels. By reciting "without providing any of the plurality of undesired channels," the claim expressly excludes *providing* undesired channels; it does not exclude *selecting* undesired channels. Thus, the claim covers selecting both desired and undesired channels.

Even if claim 1 were to exclude selecting undesired channels, Petitioner's showing for claim element 1C is persuasive. Petitioner identifies Zhang's digital channel demultiplexer 230 and digital selector 240 *together* as the recited DFE. Pet. 22–23. As Petitioner points out, Zhang teaches "digital channel demultiplexer 230 . . . demultiplexes the multi-channel digital RF signal into separate digital RF channels C_1 to C_n." Ex. 1013 ¶ 28, Fig. 2 (cited by Pet. 23–24). Zhang further teaches "digital selector 240 receives the demultiplexed digital RF channels C_1 to C_n and then *selects one or more of the RF channels D_1 to D_m* from one or more of the digital RF channels C_1 to C_n" and that "the *selected RF channels D_1 to D_m then feed* into a digital transport interface 260." *Id.* ¶¶ 28–29 (emphases added), Fig. 2. In other words, Zhang's selector 240 (which Petitioner identifies as part of the recited DFE) selects and provides RF channels D_1–D_m (which Petitioner also identifies as the recited desired channels). *See* Pet. 24 ("Selector 240 further provides the desired channels."); Pet. Reply 6 ("[T]he output provides D_1–D_m, which are undisputedly desired channels."); Ex. 1013 ¶ 28. Patent Owner does not dispute this aspect of Petitioner's analysis, acknowledging Zhang's "[s]elector 240 selects desired channels D_1–D_m from channels C_1–C_n." PO Resp. 33 (annotation of Figure 2 of Zhang).

Patent Owner further argues "Zhang's Demultiplexer 230 does not 'select' any desired channels; rather, it demultiplexes all channels, both desired and undesired, without performing any selection." PO Resp. 31. Patent Owner reiterates its position that "channels C_1–C_n encompass all channels in the entire signal band, both desired and undesired." *Id.* at 32–34 (citing Ex. 2009 ¶¶ 78–82).

Petitioner counters that "Zhang calls each of C_1–C_n a 'desired channel,' and the selected number 'n' of them is a variable disclosed as being less than the number of channels in the digitized input signal." Pet. Reply 5 (citing Ex. 1013 ¶¶ 28, 30, 32–33, 42).

We agree with Petitioner. Zhang teaches that "RF channels C_1 to C_n contain content channels that are selected or used by a subscriber." Ex. 1013 ¶ 28. The fact that channels C_1–C_n contain content channels that are "selected" or "used" implies that channels C_1–C_n themselves are desired channels, not both desired and undesired channels. Indeed, as Petitioner points out, Zhang refers to each of channels C_1–C_n as a "desired" channel:

> Numeric oscillator 310(1) generates a frequency, or "target" frequency, that matches the characteristic frequency of *a desired RF channel, or "target" RF channel*. . . . Thus, *only the target RF channel passes*. Digital tuner circuit 300 then outputs the *separated RF channels C_1 to C_n* . . . .

Id. ¶ 32 (emphases added) (cited by Pet. Reply 5).

Even if channels C_1–C_n were to include both desired and undesired channels, however, Patent Owner's argument still fails. As explained above, claim 1 does not exclude selecting undesired channels; it only excludes providing undesired channels. Moreover, Zhang's selector 240 (which Petitioner identifies as part of the recited DFE) both selects and provides RF channels D_1–D_m (which Petitioner also identifies as the recited desired channels). *See* Pet. 24; Ex. 1013 ¶ 28. Again, Patent Owner does not dispute this aspect of Petitioner's analysis. PO Resp. 33 (annotation of Figure 2 of Zhang ("Selector 240 selects desired channels D_1–D_m from channels C_1–C_n.")).

Patent Owner further argues "Petitioner . . . fails to show why Zhang's Selector 240 discloses a 'digital front end (DFE)' as claimed." PO Resp. 35. Patent Owner contends the Petition "confirms that Zhang's 'Digital Channel Demultiplexer 230' alone, not Zhang's Selector 240, corresponds to the claimed 'digital front end (DFE).'" *Id.* To illustrate its position, Patent Owner directs us to a figure from the Petition, reproduced below. *Id.* at 36 (citing Pet. 7).

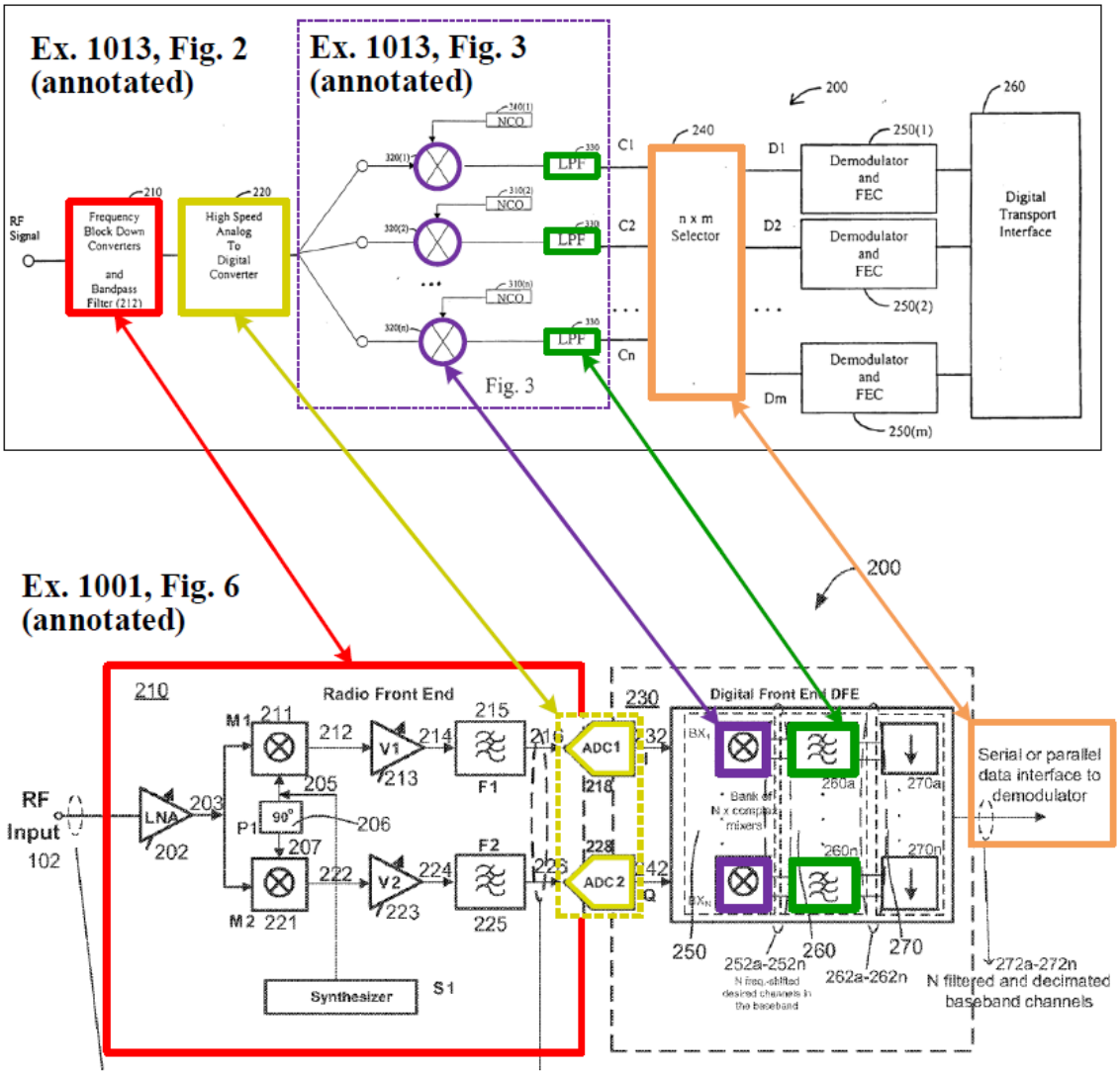

The figure from the Petition compares annotated versions of Zhang's Figure 2 and the '866 patent's Figure 6. Pet. 6–7. Patent Owner asserts "Petitioner has mapped Zhang's Selector 240 (upper figure) using the color orange to the arrow titled 'serial or parallel data interface to demodulator' that is output from the digital front end 230 in the '866 patent (dotted box in the lower figure)," effectively "mapp[ing] Zhang's selector 240 to the ***output*** of the '866 patent's digital front end (DFE)." PO Resp. 36–37; *see also id.* at 37–38 (citing Ex. 2018, 145:16–147:13 (Lett Deposition)). According to Patent Owner, "if Zhang's selector 240 maps to the ***output*** of the digital front end, it cannot be the front-end itself." *Id.* at 38.

Petitioner counters that "[t]he Petition identified Zhang's demultiplexer 230 combined with selector 240 for teaching the 'DFE' and 'serial interface' in element [1C]." Pet. Reply 20 (citing Pet. 22–26). Petitioner asserts that "Zhang's demultiplexer 230 and selector 240 . . . together . . . perform the DFE function of 'select and provide each of the plurality of desired channels, via a serial interface, without providing any of the plurality of undesired channels.'" *Id.* Petitioner adds, "Nothing in the claim language excludes the DFE from including Zhang's demultiplexer 230 and selector 240, or any other digital circuit that performed the functions recited in element [1C]." *Id.* at 22.

We agree with Petitioner. As discussed above, Petitioner identifies Zhang's demultiplexer 230 and selector 240 together as the recited DFE because they together are (1) "coupled to the wideband ADC" and (2) "configured to concurrently select and provide each of the plurality of desired channels," (3) "via a serial interface," (4) "without providing any of the plurality of undesired channels," as recited. Pet. 22–24. For the recited

serial interface, Petitioner relies specifically on Zhang's selector 240. *Id.* at 24 ("Selector 240 further provides the desired channels 'via a serial interface' as recited in Element [1C]."). To demonstrate this mapping, Petitioner uses the color orange in its comparison figure to match Zhang's selector 240 to the '866 patent's *serial interface*. *See id.* at 6 ("Zhang discloses the same cable TV device as the '866 patent. This includes . . . providing a plurality of desired channels via a serial interface (**orange**) (Element [1C])."); *id.* at 7 (comparison figure). Accordingly, Patent Owner's argument that Petitioner's comparison figure is mapping Zhang's selector 240 to the output of the '866 patent's digital frontend fails.

Patent Owner further argues that Petitioner's declarant Mr. Lett "opined that the claim requires the acts of 'select[ing] and provid[ing]' to occur 'concurrently,'" and that Petitioner "fails to show that the claims are disclosed or obvious under the construction proposed by its own expert." PO Resp. 42–44 (citing Ex. 2019, 76:9–77:5 (Lett Deposition)). Patent Owner asserts that Zhang's "channel demultiplexer 230 and selector 240 process the data sequentially, not concurrently." *Id.* at 43. Patent Owner asserts in particular, "Zhang explains that the digital channel demultiplexer 230 'demultiplexes the multi-channel digital RF signal into separate digital RF channels C_1 to C_n,'" and "the selector 240 then 'receives' the demultiplexed channels C_1–C_n, and selects channels D_1–D_m from the received channels." *Id.* at 43–44 (citing Ex. 1013 ¶ 28, Fig. 2).

Petitioner counters that Patent Owner "distorts an out-of-context deposition response by Petitioner's expert to argue that *Petitioner's* claim construction position is that the claim excludes providing data some time after it has been selected," which Petitioner contends is "a construction the

Petition and its expert did not adopt" and "[Patent Owner] also does not ask the Board to adopt." Pet. Reply 23. Petitioner further contends "the Petition described how Zhang's Figure 3, like the '866 patent's Figure 2, includes multiple parallel signal paths for 'concurrently selecting and providing a plurality of desired channels C_1–C_n.'" *Id.* at 22 (citing Pet. 23–24). In particular, "Zhang's demultiplexer 230 concurrently selects and then provides each 'C' channel with every other 'C' channel." *Id.* at 22–23. Petitioner adds that construing "concurrently" to exclude any delay as a signal travels from input to output would be improper "because it is contrary to element [1C]'s requirement that 'concurrently select and provide' be 'via a serial interface'" and "this delay [is] inherent in all circuits." *Id.* at 24 (citing Ex. 1079, 77:6–79:24 (Lett Reply Declaration)).

We agree with Petitioner. Nowhere in the Petition does Petitioner propose construing "concurrently" to exclude sequentially processing data. *See* Pet. In connection with the claim term "concurrently," Petitioner provides an annotated version of Figure 2 of Zhang in its Petition, reproduced below. *Id.* at 23.

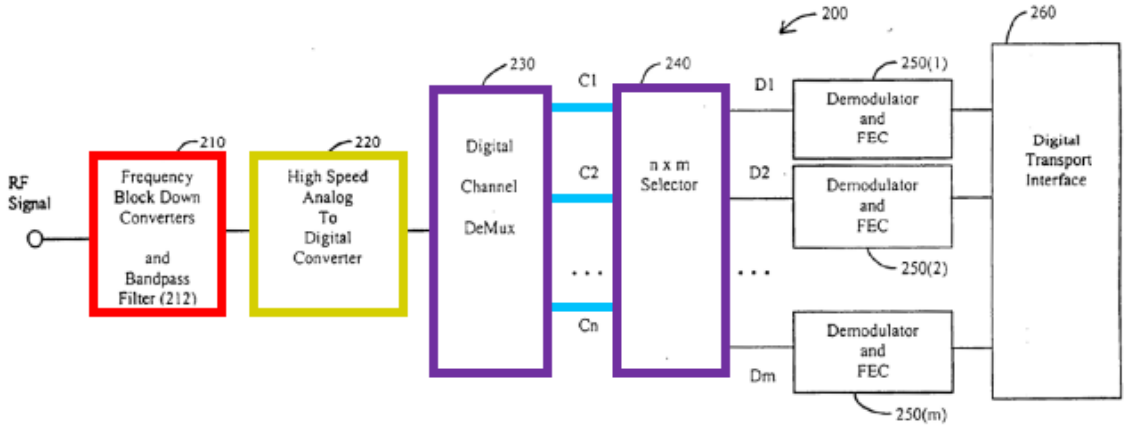

Fig. 2

Ex. 1013, Fig. 2 (annotated)

Figure 2 of Zhang, as annotated by Petitioner, is a diagram of multi-channel demodulator 200. *See* Ex. 1013 ¶ 23. Petitioner asserts that Zhang's "[d]igital tuner 300 (an embodiment of demultiplexer 230) . . . includ[es] multiple signal paths for concurrently selecting and providing a plurality of desired channels C_1–C_n (**light blue**)." Pet. 23 (citing Ex. 1013, Fig. 3). Petitioner explains that "[e]ach path receives the multi-channel digital RF signal from ADC 220 and operates concurrently to select one respective desired channel," and that "selector 240 provides 'm' channels D_1–D_m selected from any or all of channels C_1–C_n . . . for demodulation by one or more demodulators." *Id.* at 24. Petitioner appears to argue in the Petition that processing data along Zhang's parallel paths at the same time satisfies "concurrently." Patent Owner does not dispute Petitioner's position in this regard.

In its Reply, Petitioner further contends that, "even with the signal propagation delay [(i.e., sequential processing)], Zhang, like the '866 patent, performs the 'selecting' concurrently with the 'providing' because the desired channels are digital data *streams*, for example, as shown in the Petition passing through the serial interface." Pet. Reply 25 (citing Pet. 23–26; Ex. 1078 ¶ 31). Petitioner asserts that "when a channel is first selected, there is a time lapse to when the channel starts streaming from the output; however, after that, the channel continues to stream and, thus it is concurrently being selected and provided." *Id.* (citing Ex. 1078 ¶ 31; Ex. 1079, 78:16–25, 81:4–11). In other words, "some data in the channel streams into the input of Zhang's demultiplexer 230 concurrently with other data in the channel streaming out of output from the serial interface of selector 240." *Id.* (citing Ex. 1078 ¶ 31).

Based on the record before us, we find that Zhang teaches the recited DFE of claim element 1C. *See* Pet. 22–27.

In view of the foregoing, we find that Zhang teaches all the limitations of claim 1.

3. Independent Claim 14

Claim 14 is directed to a "cable TV device" comprising a "wideband analog-to-digital converter (ADC)" and a "plurality of digital down converters." Petitioner designates the preamble as element 14A and the recited limitations as elements 14B through 14D.

Elements 14A and 14B are similar to elements 1A and 1B. For elements 14A and 14B, Petitioner relies on the same analysis discussed above with respect to elements 1A and 1B. Pet. 28. Patent Owner does not dispute Petitioner's contentions regarding elements 14A or 14B. *See* PO Resp. Based on Petitioner's argument and evidence, and for the reasons given above as to elements 1A and 1B, we find that Zhang teaches elements 14A and 14B. *See* Pet. 20–22.

We turn now to claim elements 14C and 14D, starting with Petitioner's arguments and then turning to the parties' dispute.

a. Element 14C: "plurality of digital down converters"

Claim 14 recites "a plurality of digital down converters coupled to the wideband ADC, wherein each digital down converter, of the plurality of digital down converters, is operable to generate a digital channel output corresponding to each desired channel, of the plurality of desired channels."

For this limitation, Petitioner cross-references its discussion regarding claim element 1C and contends "a POSITA would have understood 'a plurality of digital down converters' to be included in the DFE digital circuit illustrated in [Zhang's] Figure 2." Pet. 28. As discussed above, Petitioner identifies Zhang's demultiplexer 230 and selector 240 together as the DFE recited in claim 1. *Id.* at 22.

Petitioner further provides an annotated version of Figure 3 of Zhang, reproduced below. Pet. 29.

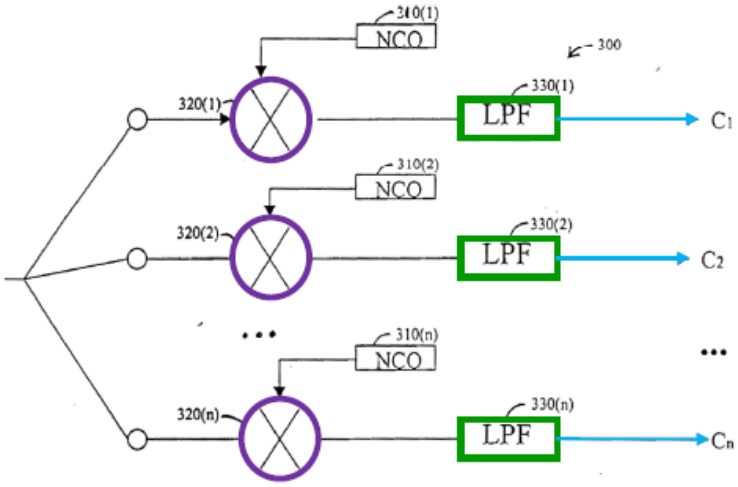

Fig. 3

Ex. 1013, Fig. 3 (annotated)

Figure 3 of Zhang, as annotated by Petitioner, is a diagram of digital tuner 300, which may be used to implement demultiplexer 230 of Figure 2 of Zhang. *See* Ex. 1013 ¶ 30. Referring to Figure 3, Petitioner asserts that "Zhang's demultiplexer 230 . . . includ[es] a plurality of signal paths, each with a complex multiplier (**purple**) and filter 330 (**green**) that are coupled to ADC 220 (claimed 'wideband ADC') and operable to generate 'target' channels C_1–C_n (**light blue**) selected by the subscriber (claimed 'desired channels')." Pet. 29 (citing Ex. 1013 ¶¶ 12, 28, 30–32, Fig. 3). According

to Petitioner, "[e]ach path in Zhang is one of a 'plurality of digital down converters . . . operable to generate a digital channel output corresponding to each desired channel, of the plurality of desired channels' as recited in Element [14C]." *Id.*

Patent Owner makes several arguments regarding claim element 14C, which we will address below.

b. Element 14D: "serial interface"

In connection with claim element 14C, claim 14 further recites "the plurality of digital down converters is operable to provide each digital channel output via a serial interface." For this limitation, Petitioner provides an annotated version of Figure 2 of Zhang, reproduced below. Pet. 31.

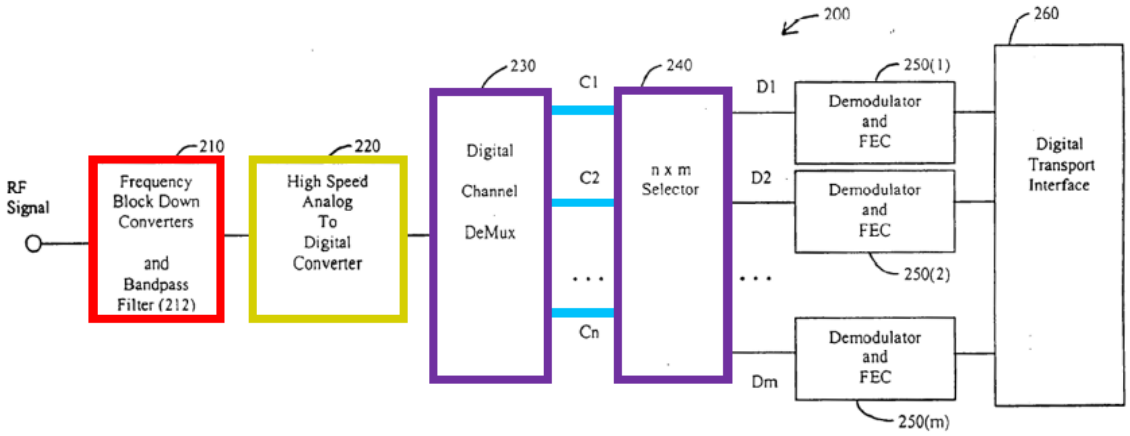

Fig. 2

Ex. 1013, Fig. 2 (annotated)

Figure 2 of Zhang, as annotated by Petitioner, is a diagram of multi-channel demodulator 200. *See* Ex. 1013 ¶ 23. Petitioner asserts that "Zhang's demultiplexer 230 . . . provides channels C_1–C_n (**light blue**) (which include each claimed 'digital channel output') via a selector 240 as channels D_1–D_m to one or more demodulators 250." Pet. 30 (citing Ex. 1013 ¶¶ 5, 28, 38–39, 47). Relying on its discussion regarding claim element 1C, Petitioner adds

that "[e]mbodiments of selector 240 use a serial interface." *Id.* at 30–31 (citing Ex. 1002 ¶¶ 113–119; Ex. 1013 ¶¶ 38–39, Fig. 5).

Under an alternative theory, Petitioner contends that, "[t]o the extent Patent Owner argues that Zhang does not expressly disclose the claimed 'serial interface,' implementing Zhang's demultiplexer 230 to provide each digital channel output via a serial interface was obvious as one of two common and predictable design choices . . . used by POSITAs as described above for Element [1C]." Pet. 32.

Patent Owner does not specifically dispute Petitioner's contentions regarding claim element 14D. *See* PO Resp. Based on Petitioner's argument and evidence, and for the reasons given above as to claim element 1C, we find that Zhang teaches the recited serial interface of claim element 14D. *See* Pet. 30–32.

c. The Parties' Dispute

As noted above, Patent Owner disputes Petitioner's analysis for claim element 14C. Patent Owner argues in particular "the plurality of digital down converters relied upon by Petitioner in Zhang down convert both desired and undesired channels, and thus are not '***each***' 'operable to generate a digital channel output ***corresponding to each desired channel***.'" PO Resp. 10; *see also id.* at 12–28 (arguing that "channels C_1–C_n are all channels in the entire signal band, both desired and undesired" (capitalization and emphasis omitted)).

Patent Owner's argument is unavailing. We consider Petitioner's annotated version of Figure 2 of Zhang, reproduced below. Pet. 23, 31.

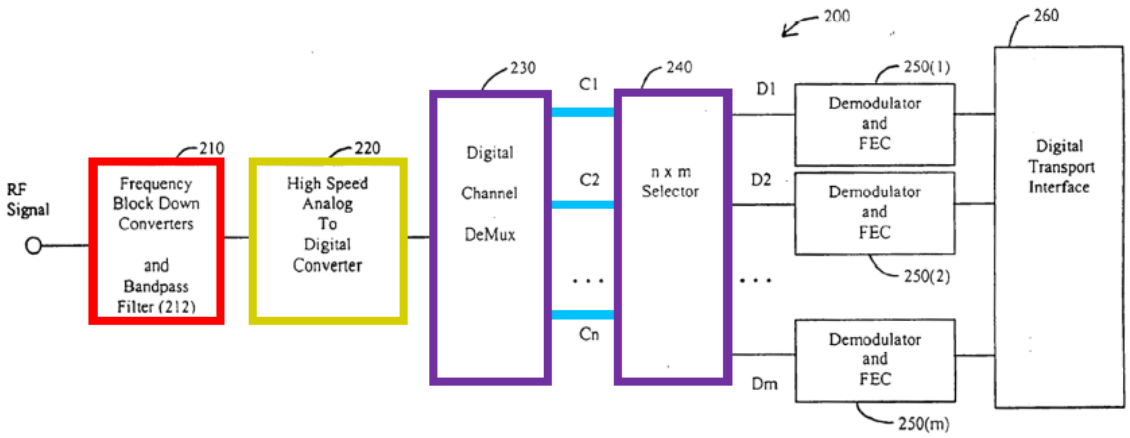

Fig. 2

Ex. 1013, Fig. 2 (annotated)

Figure 2 of Zhang, as annotated by Petitioner, is a diagram of multi-channel demodulator 200. *See* Ex. 1013 ¶ 23. Petitioner identifies each of the signal paths across Zhang's demultiplexer 230 and selector 240 as the recited plurality of digital down converters. Pet. 22 (as to claim 1, asserting "Zhang teaches the claimed 'digital frontend (DFE)' as Digital Channel Demultiplexer 230 and a portion of Digital Selector 240"); *id.* at 28 (as to claim 14, asserting "a POSITA would have understood 'a plurality of digital down converters' to be included in the DFE digital circuit illustrated in [Zhang's] Figure 2").

As discussed above with respect to claim 1 (*see supra* Part III.B.2.d), Zhang teaches that "RF channels C_1 to C_n contain content channels that are selected or used by a subscriber." Ex. 1013 ¶ 28. Petitioner points out that Zhang even refers explicitly to each of selected or used channels C_1–C_n as a "*desired* RF channel." *Id.* ¶ 32 (emphasis added) ("[O]scillator 310(1) generates a frequency . . . that matches the characteristic frequency of a desired RF channel."). In this way, channels C_1–C_n satisfy the recited desired channels.

Turning back to Petitioner's annotated version of Zhang's Figure 2, reproduced above, we find that each signal path across demultiplexer 230 and selector 240 (which Petitioner identifies as the recited digital down converters) generates a digital channel output (see outputs of demultiplexer 230) corresponding to each channel C_1–C_n (which Petitioner identifies as the recited desired channels). *See* Pet. 23, 28–29.

We note Patent Owner's contention that Zhang's reference to "an entire signal band with n channels" means channels C_1–C_n include both desired and undesired channels. PO Resp. 12 (citing Ex. 1013 ¶ 27); *id.* at 18 ("[I]t is undisputed that the number 'n' is the number of both desired and undesired channels in the 'entire signal band.'"); *id.* at 20. As noted above, however, Zhang explains that "RF channels C_1 to C_n contain content channels that are selected or used by a subscriber." Ex. 1013 ¶ 28; *see also id.* ¶ 42 ("A demultiplexer . . . demultiplexes the multi-channel digital RF signal into separate digital RF channels C_1 to C_n. . . . *The exact number will depend on the specific application*." (emphasis added)); *id.* ¶ 30 ("Digital tuner 300 includes a bank of n numeric control oscillators . . . , complex multipliers . . . , and low-pass filters . . . . One chain of each of these elements is used for each RF channel. *The exact number of these elements will depend on the number of RF channels to be demultiplexed*." (emphasis added)). Zhang then characterizes each of channels C_1–C_n as a "desired RF channel." *Id.* ¶ 32 ("Numeric oscillator 310(1) generates a frequency . . . that matches the characteristic frequency of a desired RF channel."); *id.* (LPFs 330(1 . . . n) receive all RF channels and each filters out all RF channels except for its target RF channel. Thus, only the target RF channel passes."). In the context of Zhang's full disclosure, the reference to "an

entire signal band with n channels" appears to be a reference to a signal band that *includes* the selected (or used) n channels. That is, the signal band could also include unselected (or unused) channels. This reading is further supported by claim 8 of Zhang, which recites "the ADC converts an entire signal band, the signal band including the multichannel analog RF signal." *Id.*, claim 8 (cited by Pet. 21–22).

We also note Patent Owner's contention that Zhang's prosecution history reveals "the applicant explained that it is the selector that distinguished Zhang from its prior art, where all of the channels were demodulated." PO Resp. 15–16; *see also id.* at 20–21 ("[I]f Zhang's Figure 3 down converted and output only desired channels, there would have been no need for the subsequent channel selector 240 to select desired channels D_1–D_m from channels C_1–C_n." (quoting Ex. 2009 ¶ 57 (Declaration of Dr. Russ))). Distinguishing Zhang from the prior art based on Zhang's selector, however, does not mean Zhang's channels C_1–C_n include both desired and undesired channels. Zhang explains that "channels C_1 to C_n contain content channels that are selected or used by a subscriber," and that "selector 240 . . . selects one or more of the RF channels D_1 to D_m from one or more of the digital RF channels C_1 to C_n." Ex. 1013 ¶ 28. In other words, channels C_1–C_n may be a set of subscriber-selected channels while channels D_1–D_m may be a further set of subscriber-selected channels that are a subset of channels C_1–C_n. Being able to select a subset of channels translates to systems that are faster and dissipate less heat because fewer resources are needed to demodulate only the selected subset of channels. *See id.*

Patent Owner further argues "Petitioner's assertion that Zhang's channels C_1–C_n disclose the claimed 'desired channels' . . . is also inconsistent with Petitioner's mapping of Zhang to other limitations," namely claim element 14D. PO Resp. 26–27. To illustrate its position, Patent Owner provides an annotated version of Figure 5 of Zhang, reproduced below. *Id.* at 27.

Figure 5 "**selects one or more RF channels D_1 to D_m from the digital RF channels C_1 to C_n** and then **sends them** to appropriate demodulators or outputs ports ... **through different data buses** ...." Ex. 1013 [Zhang] [0039]

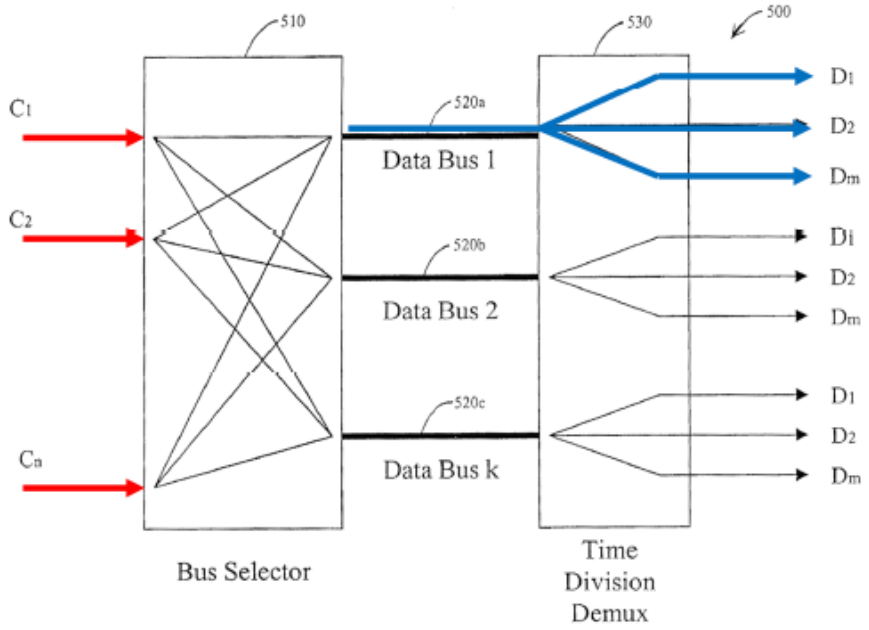

Fig. 5

Figure 5 of Zhang, as annotated by Patent Owner, is a diagram of selector 500, which may be used to implement selector 240 of Figure 2. *See* Ex. 1013 ¶ 38. Patent Owner asserts "what is 'provided' on Data Bus 1 in the selector 240 are channels D_1–D_m (blue) shown on the right-hand side output of Data bus 1, not channels C_1–C_n (red)." PO Resp. 27. According to Patent Owner, to the extent that Petitioner relies on channels C_1–C_n as the desired channels for claim element 14C, "that mapping contradicts

Petitioner's mapping for limitation 14[d], where Petitioner must rely on channels D_1–D_m as 'the plurality of desired channels' output by down converters via a serial bus." *Id.* at 28.

We disagree with Patent Owner's position that "Petitioner must rely on channels D_1–D_m as 'the plurality of desired channels' output by down converters via a serial bus." *See* PO Resp. 28. Claim 14D recites "the plurality of digital down converters is operable to provide each digital channel output [corresponding to each desired channel] via a serial interface." As shown in Figures 2, 3, and 5 of Zhang, each path across demultiplexer 230 and selector 240 (i.e., "digital down converters") provides a digital channel output (e.g., outputs for channels C_1–C_n) corresponding to a desired channel (e.g., channels C_1–C_n) that is then provided via a serial interface in selector 240 (e.g., selector 500) as further channels (e.g., channels D_1–D_m). Ex. 1013, Figs. 2, 3, 5. Patent Owner does not appear to dispute that Zhang operates in this way. *See* PO Resp. 27 (annotation acknowledging Zhang's "Figure 5 'selects one or more RF channels D_1 to D_m from the digital RF channels C_1 to C_n and then sends them to appropriate demodulators or output ports . . . through different data buses.'" (quoting Ex. 1013 ¶ 39)). Accordingly, Petitioner's reliance on channels C_1–C_n as the recited desired channels is persuasive.

Even if Petitioner must rely on channels D_1–D_m as the recited desired channels in claim element 14D, Patent Owner's argument that Petitioner's mapping is inconsistent still fails. Claim element 14C recites "each digital down converter . . . is operable to generate a digital channel output corresponding to each desired channel." Claim element 14D adds "the

plurality of digital down converters is operable to provide each digital channel output via a serial interface."

As discussed above, Petitioner relies on its discussion of claim element 1C as part of its analysis for claim element 14C. Pet. 28. In that discussion, Petitioner points to where Zhang teaches that "demultiplexer 230 . . . demultiplexes the multi-channel digital RF signal into separate digital RF channels C_1 to C_n," and that "selector 240 receives the demultiplexed digital RF channels C_1 to C_n and then selects one or more of the RF channels D_1 to D_m from one or more of the digital RF channels C_1 to C_n." Ex. 1013 ¶ 28, Fig. 2 (cited by Pet. 23–24). Petitioner asserts that "[s]elector 240 further provides the desired channels 'via a serial interface.'" Pet. 24–26 (citing Ex. 1013 ¶¶ 38–39, Fig. 5; Ex. 1002 ¶¶ 112–116). Thus, each path across Zhang's demultiplexer 230 and selector 240 (i.e., "digital down converters") generates a digital channel output (e.g., outputs for channels D_1–D_m) corresponding to each desired channel (e.g., channels D_1–D_m) and provides each digital output via a serial interface in selector 240 (e.g., selector 500). *See* Pet. 24 ("Selector 240 further provides the desired channels."); Pet. Reply 6 ("[T]he output provides D_1–D_m, which are undisputedly desired channels."); Ex. 1013 ¶ 28, Figs. 2, 3, 5. As noted above, Patent Owner acknowledges Zhang's "[s]elector 240 selects desired channels D_1–D_m from channels C_1–C_n." PO Resp. 33 (annotated Figure 2 of Zhang). Accordingly, Petitioner's reliance on channels D_1–D_m as the recited desired channels also is persuasive.

Based on the record before us, and for the reasons given above with respect to claim element 1C, we find that Zhang teaches the recited plurality of digital down converters of claim element 14C. *See* Pet. 28–30.

In view of the foregoing, we find that Zhang teaches all the limitations of claim 14.

4. Independent Claim 27

Claim 27 is directed to a "cable television (TV) device" and recites similar limitations as claim 1. For example, claim 27 recites a "wideband analog-to-digital converter (ADC)" and a "digital frontend (DFE)." For these similarly recited limitations, Petitioner relies on its discussion of claim 1. Pet. 32–33. Patent Owner likewise relies on its arguments regarding claim 1. *See* PO Resp. 28. Based on Petitioner's argument and evidence, and for the reasons given above as to claim 1, we find that Zhang teaches the similarly recited limitations of claim 27.

Claim 27 adds that "the cable TV device comprises a digital video recorder (DVR)." For this limitation, Petitioner asserts "Zhang's cable TV device may be integrated as a wide-band front-end of a 'set-top box/PVR/home media server.'" Pet. 33 (citing Ex. 1013 ¶ 45, Fig. 8). According to Petitioner, "[a] POSITA would have understood that 'PVR' stands for 'personal video recorder,' which is an alternate name for 'DVR' or 'digital video recorder' for recording content received by a STB." *Id.* Petitioner relies on the declaration testimony of Mr. Lett as support. *Id.* (citing Ex. 1002 ¶¶ 139–140).

Patent Owner does not specifically dispute Petitioner's contentions regarding this additional limitation of claim 27. *See* PO Resp. Based on Petitioner's argument and evidence, we find that Zhang teaches the recited DVR of claim 27. *See* Pet. 33.

In view of the foregoing, we find that Zhang teaches all the limitations of claim 27.

5. Independent Claim 41

Claim 41 is directed to a "cable TV device" and recites similar limitations as claims 14 and 27. For example, claim 41 recites a "wideband analog-to-digital converter (ADC)," a "plurality of digital down converters," and a "digital video recorder (DVR)." For these similarly recited limitations, Petitioner relies on its discussion of claims 14 and 27. Pet. 33–34. Patent Owner relies on its arguments regarding claim 14. *See* PO Resp. 28. Based on Petitioner's argument and evidence, and for the reasons given above as to claims 14 and 27, we find that Zhang teaches all the limitations of claim 41.

6. Dependent Claims

Each of claims 3–7, 9, 11, 13, 16–20, 22, 24, 26, 29–33, 35–37, 40, 43–47, 49–51, and 54 depends from independent claims 1, 14, 27, or 41. Petitioner contends that Zhang teaches the limitations recited in these dependent claims. Pet. 34–49 (citing Ex. 1013 ¶¶ 5–7, 11–12, 24–25, 28–34, 38–39, 41–48, Figs. 2, 3, 5). Petitioner relies on the declaration testimony of Mr. Lett as support. *Id.* (citing Ex. 1002 ¶¶ 65–67, 72, 74–76, 78–79, 115–118, 145–184).

Patent Owner does not specifically dispute Petitioner's contentions regarding the dependent claims. *See* PO Resp. Having reviewed Petitioner's argument and evidence (*see* Pet. 34–49), we find that Zhang teaches the limitations of the dependent claims.

7. Summary

In view of the foregoing, we determine that Petitioner has demonstrated by a preponderance of the evidence that claims 1, 3–7, 9, 11, 13, 14, 16–20, 22, 24, 26, 27, 29–33, 35–37, 40, 41, 43–47, 49–51, and 54 are anticipated by Zhang or would have been obvious over Zhang.

C. Asserted Challenge Based on Zhang and Reisman

Petitioner asserts that claims 9–12, 23–25, 27, 29–33, 35–41, 43–47, 49–55, 57–61, 63–69, 71–75, and 77–82 of the '866 patent would have been obvious over Zhang and Reisman. Pet. 49–59. Patent Owner disputes certain aspects of Petitioner's analysis. PO Resp. 4–45. For the reasons explained below, we determine that Petitioner has demonstrated by a preponderance of the evidence that claims 9–12, 23–25, 27, 29–33, 35–41, 43–47, 49–55, 57–61, 63–69, 71–75, and 77–82 would have been obvious over Zhang and Reisman.

We provided an overview of Zhang above. *See supra* Part III.B.1. Before addressing the claims, we additionally provide an overview of Reisman.

1. Overview of Reisman

Reisman describes "interactive television" (ITV), where the TV includes a set-top box (STB). Ex. 1052 ¶¶ 2, 43, 98. Reisman explains that ITV may include interactivity with the TV through a digital video recorder (DVR), which also is known as a personal video recorder (PVR). *Id.* ¶¶ 48, 60. Additionally, Reisman explains that ITV may include a featured called

picture-in-picture (PIP), where a region of the TV screen presents a reduced scale video image. *Id.* ¶ 121.

2. Independent Claims 27 and 41

As discussed above, we determine that Petitioner has shown by a preponderance of the evidence that claims 27 and 41 are anticipated by Zhang or would have been obvious over Zhang.

Under an alternative theory, Petitioner contends that, "[t]o the extent Patent Owner argues that Zhang's PVR is not a 'DVR' as recited in Elements [27D] and [41D], Reisman discloses this feature." Pet. 50. Petitioner asserts that "Reisman teaches that STBs in a cable system may include a digital video recorder (DVR)." *Id.* (citing Exc. 1052 ¶¶ 5, 43, 48, 60, 73, 98, 112, 118, 191, 197, 212, 281–285, 296, 546). According to Petitioner, an ordinarily skilled artisan "would have been motivated [to] include Reisman's DVR in Zhang's STB to provide a more feature-filled and individualized user experience, which in the proposed combination still includes Zhang's wideband front-end receiver components cited for Elements [27A]–[27C] and [41A]–[41C]." *Id.* Petitioner explains that "Reisman's DVR improves user experience by allowing time-shifted and on-demand view, and enabling, e.g., fast-forwarding, rewinding, and pausing of live programming." *Id.* (citing Ex. 1052 ¶¶ 191, 197, 212, 284–285, 546, 758); *see also id.* at 50–51 (asserting that the proposed combination "merely applies a known technique of integrating a DVR into a STB . . . to a known STB . . . that was ready for improvement to yield a predictable result" and that an ordinarily skilled artisan "would have had a reasonable expectation of success").

Patent Owner does not specifically dispute Petitioner's contentions in this regard. *See* PO Resp. Based on Petitioner's argument and evidence (*see* Pet. 50–51), we find Petitioner's proposed combination of Zhang and Reisman teaches all the limitations of claims 27 and 41. We also find that Petitioner's proffered reasoning for combining Zhang and Reisman supports a legal conclusion of obviousness. *See In re Kahn*, 441 F.3d 977, 988 (Fed. Cir. 2006) ("[T]here must be some articulated reasoning with some rational underpinning to support the legal conclusion of obviousness.").

3. Independent Claim 55

Claim 55 is directed to a "cable television (TV) device" and recites similar limitations as claim 1. For example, claim 55 recites a "wideband analog-to-digital converter (ADC)" and a "digital frontend (DFE)." For these similarly recited limitations, Petitioner relies on its discussion of claim 1. Pet. 51. Patent Owner likewise relies on its arguments regarding claim 1. *See* PO Resp. 28. Based on Petitioner's argument and evidence, and for the reasons given above as to claim 1, we find that Zhang teaches the similarly recited limitations of claim 55.

Claim 55 adds that "the cable TV device is operable to configure at least some of the plurality of desired channels as an output for a picture-in-picture display." For this limitation, Petitioner asserts that "Reisman teaches that STBs in a cable system include a 'picture-in-picture display.'" Pet. 52 (citing Ex. 1052 ¶¶ 73, 98, 118, 120–121, 187, 278, 291, 378, 534, 537, 546, Fig. 3). Petitioner contends that "[a] POSITA would have been motivated to include Reisman's 'picture-in-picture display' capability in Zhang's STB, which in the proposed combination still has the wideband front-end receiver

components cited for Elements [55A]–[55C] . . . to allow a user to view different content simultaneously." *Id.* Petitioner explains that Reisman's "'picture-in-picture' beneficially displays a program in a PIP window while simultaneously providing, e.g., navigation options and interactive content in other windows," and "enables 'multitasking,' by displaying, e.g., two TV programs, and swapping them between full screen and a smaller PIP window." *Id.* at 52–53 (citing Ex. 1052 ¶¶ 61, 63, 378, 546); *see also id.* at 53 (asserting that the proposed combination "represents the obvious application of a known technique . . . to a known device . . . that was ready for improvement to yield a predic[t]able result" and that an ordinarily skilled artisan "would have had a reasonable expectation of success").

Patent Owner does not specifically dispute Petitioner's contentions in this regard. *See* PO Resp. Based on Petitioner's argument and evidence (*see* Pet. 52–53), and for the reasons given above with respect to claim 1, we find Petitioner's proposed combination of Zhang and Reisman teaches all the limitations of claim 55. We also find that Petitioner's proffered reasoning for combining Zhang and Reisman supports a legal conclusion of obviousness.

4. Independent Claim 69

Claim 69 is directed to a "cable TV device" and recites similar limitations as claims 14 and 55. For example, claim 69 recites a "wideband analog-to-digital converter (ADC)," a "plurality of digital down converters," and a "picture-in-picture display." For these similarly recited limitations, Petitioner relies on its discussion of claims 14 and 55. Pet. 54. Patent Owner relies on its arguments regarding claim 14. *See* PO Resp. 9. Based

on Petitioner's argument and evidence, and for the reasons given above as to claims 14 and 55, we find the proposed combination of Zhang and Reisman teaches all the limitations of claim 69 and that Petitioner's proffered reasoning for combining Zhang and Reisman supports a legal conclusion of obviousness.

8. Dependent Claims

Each of claims 9–12, 23–25, 29–33, 35–40, 43–47, 49–54, 57–61, 63–68, 71–75, and 77–82 depends from independent claims 1, 14, 27, 41, 55, or 69. Petitioner contends that its proposed combination of Zhang and Reisman teaches the limitations recited in the dependent claims. Pet. 54–59 (citing Ex. 1013 ¶ 47; Ex. 1052 ¶¶ 8, 52, 63, 73, 86–89, 90, 98, 120–121, 125, 149, 235, 304, 484, 643–645, Fig. 1). Petitioner relies on the declaration testimony of Mr. Lett as support. *Id.* (citing Ex. 1002 ¶¶ 150–184, 194–198, 200–220).

Patent Owner does not specifically dispute Petitioner's contentions regarding the claims 9–12, 23–25, 29–33, 35–40, 43–47, 49–54, 57–61, 63–68, 71–75, and 77–82. *See* PO Resp. Having reviewed Petitioner's argument and evidence (*see* Pet. 54–59), we find that Zhang teaches the limitations of these dependent claims.

9. Summary

In view of the foregoing, we determine that Petitioner has demonstrated by a preponderance of the evidence that claims 9–12, 23–25, 27, 29–33, 35–41, 43–47, 49–55, 57–61, 63–69, 71–75, and 77–82 would have been obvious over Zhang and Reisman.

D. Asserted Challenge Based on Zhang and Jackson

Each of claims 2–6, 15–19, 28–32, and 42–46 depends from independent claims 1, 14, 27, or 41. Petitioner asserts that these dependent claims would have been obvious over Zhang and Jackson. Pet. 59–71. Petitioner relies on Jackson for teaching various components, including its input connector, amplifiers, filters, complex mixer, and demodulator, which Petitioner asserts can be incorporated into Zhang's system to provide a way to implement and improve Zhang's receiver. *Id.* (citing Ex. 1013 ¶¶ 5–6, 12, 15, 23, 25–32, 38–39, 45, 47–48, Figs. 2, 3; Ex. 1057 ¶¶ 2–4, 6, 19–20, 23–27, Figs. 3, 4B, 5, 6, 7). Petitioner cites the declaration testimony of Mr. Lett as support. *Id.* (citing Ex. 1002 ¶¶ 64–67, 225–250).

Patent Owner does not specifically dispute Petitioner's contentions regarding claims 2–6, 15–19, 28–32, and 42–46. *See* PO Resp. Having reviewed Petitioner's argument and evidence (*see* Pet. 59–71), and for the reasons given above with respect to Petitioner's challenges based on Zhang alone, we find that Petitioner's proposed combination of Zhang and Jackson teaches the limitations of these dependent claims and that Petitioner's proffered reasoning for combining Zhang and Jackson support a legal conclusion of obviousness.

In view of the foregoing, we determine that Petitioner has demonstrated by a preponderance of the evidence that claims 2–6, 15–19, 28–32, and 42–46 would have been obvious over Zhang and Jackson.

E. Asserted Challenge Based on Zhang, Reisman, and Jackson

Each of claims 28–32, 42–46, 56–60, and 70–74 depends from independent claims 27, 41, 55, or 69. Petitioner asserts that these dependent

claims would have been obvious over Zhang, Reisman, and Jackson. Pet. 59–71. Petitioner relies on Jackson for teaching various components, including its input connector, amplifiers, filters, complex mixer, and demodulator, which Petitioner asserts can be incorporated into Zhang's system to provide a way to implement and improve Zhang's receiver. *Id.* (citing Ex. 1013 ¶¶ 5–6, 12, 15, 23, 25–32, 38–39, 45, 47–48, Figs. 2, 3; Ex. 1057 ¶¶ 2–4, 6, 19–20, 23–27, Figs. 3, 4B, 5, 6, 7). Petitioner cites the declaration testimony of Mr. Lett as support. *Id.* (citing Ex. 1002 ¶¶ 64–67, 225–250).

Patent Owner does not specifically dispute Petitioner's contentions regarding claims 28–32, 42–46, 56–60, and 70–74. *See* PO Resp. Having reviewed Petitioner's argument and evidence (*see* Pet. 59–71), and for the reasons given above with respect to Petitioner's challenge based on Zhang and Reisman, we find that Petitioner's proposed combination of Zhang, Reisman, and Jackson teaches the limitations of these dependent claims and that Petitioner's proffered reasoning for combining Zhang, Reisman, and Jackson support a legal conclusion of obviousness.

In view of the foregoing, we determine that Petitioner has demonstrated by a preponderance of the evidence that claims 28–32, 42–46, 56–60, and 70–74 would have been obvious over Zhang, Reisman, and Jackson.

F. Asserted Challenge Based on Zhang and Pandey

Petitioner asserts that claims 1, 3–9, 11, 13, 14, 16–22, 24, 26, 34–36, and 48–50 would have been obvious over Zhang and Pandey. Pet. 72–79. Petitioner cross-references its discussion of Zhang's teaching of the serial

interface of claims 1, 14, 36, 50, 64, and 78 as well as the parallel interface of claims 35, 49, 63, and 77. *Id.* at 72. Petitioner further relies on Pandey for also teaching serial and parallel interfaces, which Petitioner says can be incorporated into Zhang's system to provide a way to implement Zhang's digital circuit. *Id.* at 72–79 (citing Ex. 1013 ¶¶ 28–30, 37, 40, 42, 44, 47–48, Fig. 2; Ex. 1014, code (57), 1:15–2:38, 2:64–3:27, 5:50–53, 6:10–15, 6:44–53, 7:13–19, 10:24–53, 10:58–11:19, 13:33–14:7, 29:44–30:9, 30:31–31:12, 31:15–22, 31:56–63, 32:7–15, Figs. 2–3, 37–39). Petitioner cites the declaration testimony of Mr. Lett as support. *Id.* (citing Ex. 1002 ¶¶ 252–262).

Patent Owner does not specifically dispute Petitioner's contentions in this regard. *See* PO Resp. Having reviewed Petitioner's argument and evidence (*see* Pet. 72–79), and for the reasons given above with respect to Petitioner's challenges based on Zhang alone, we find that Petitioner's proposed combination of Zhang and Pandey teaches the limitations of claims 1, 3–9, 11, 13, 14, 16–22, 24, 26, 34–36, and 48–50 and that Petitioner's proffered reasoning for combining Zhang and Pandey support a legal conclusion of obviousness.

In view of the foregoing, we determine that Petitioner has demonstrated by a preponderance of the evidence that claims 1, 3–9, 11, 13, 14, 16–22, 24, 26, 34–36, and 48–50 would have been obvious over Zhang and Pandey.

G. Asserted Challenge Based on Zhang, Reisman, and Pandey

Each of claims 9–12, 22–25, 34–36, 48–50, 62–64, and 76–78 depends from independent claims 1, 14, 27, 41, 55, and 69. Petitioner

asserts that these dependent claims would have been obvious over Zhang, Reisman, and Pandey. Pet. 72–79. Petitioner cross-references its discussion of Zhang's teaching of the serial interface of claims 1, 14, 36, 50, 64, and 78 as well as the parallel interface of claims 35, 49, 63, and 77. *Id.* at 72. Petitioner further relies on Pandey for also teaching serial and parallel interfaces, which Petitioner says can be incorporated into Zhang's system to provide a way to implement Zhang's digital circuit. *Id.* at 72–79 (citing Ex. 1013 ¶¶ 28–30, 37, 40, 42, 44, 47–48, Fig. 2; Ex. 1014, code (57), 1:15–2:38, 2:64–3:27, 5:50–53, 6:10–15, 6:44–53, 7:13–19, 10:24–53, 10:58–11:19, 13:33–14:7, 29:44–30:9, 30:31–31:12, 31:15–22, 31:56–63, 32:7–15, Figs. 2–3, 37–39). Petitioner cites the declaration testimony of Mr. Lett as support. *Id.* (citing Ex. 1002 ¶¶ 252–262).

Patent Owner does not specifically dispute Petitioner's contentions in this regard. *See* PO Resp. Having reviewed Petitioner's argument and evidence (*see* Pet. 72–79), and for the reasons given above with respect to Petitioner's challenge based on Zhang and Reisman, we find that Petitioner's proposed combination of Zhang, Reisman, and Pandey teaches the limitations of claims 9–12, 22–25, 34–36, 48–50, 62–64, and 76–78 and that Petitioner's proffered reasoning for combining Zhang, Reisman, and Pandey support a legal conclusion of obviousness.

In view of the foregoing, we determine that Petitioner has demonstrated by a preponderance of the evidence that claims 9–12, 22–25, 34–36, 48–50, 62–64, and 76–78 would have been obvious over Zhang, Reisman, and Pandey.

H. Asserted Challenge Based on Zhang, Jackson, and Pandey

Each of claims 2–6 and 15–19 depends from independent claims 1 or 14. Petitioner asserts that these dependent claims would have been obvious over Zhang, Jackson, and Pandey. Pet. 79–80. Petitioner cross-references its discussion regarding its challenge based on Zhang and Jackson as well as its challenge based on Zhang and Pandey. *Id.* at 79 (citing Ex. 1002 ¶ 263–264).

Patent Owner does not specifically dispute Petitioner's contentions for this challenge. *See* PO Resp. Having reviewed Petitioner's argument and evidence (*see* Pet. 79–80), and for the reasons given above with respect to Petitioner's challenge based on Zhang and Jackson as well as its challenge based on Zhang and Pandey, we find that Petitioner's proposed combination of Zhang, Jackson, and Pandey teaches the limitations of claims 2–6 and 15–19 and that Petitioner's proffered reasoning for combining Zhang, Jackson, and Pandey support a legal conclusion of obviousness.

In view of the foregoing, we determine that Petitioner has demonstrated by a preponderance of the evidence that claims 2–6 and 15–19 would have been obvious over Zhang, Jackson, and Pandey.

IV. CONCLUSION

For the reasons given, Petitioner has demonstrated by a preponderance of the evidence that claims 1–82 of the ’866 patent are unpatentable as follows.[6]

[6] Should Patent Owner wish to pursue amendment of the challenged claims in a reissue or reexamination proceeding subsequent to the issuance of this Decision, we draw Patent Owner’s attention to the April 2019 Notice Regarding Options for Amendments by Patent Owner Through Reissue or Reexamination During a Pending AIA Trial Proceeding. *See* 84 Fed. Reg. 16,654 (Apr. 22, 2019). If Patent Owner chooses to file a reissue application or a request for reexamination of the challenged patent, we remind Patent Owner of its continuing obligation to notify the Board of any such related matters in updated mandatory notices. *See* 37 C.F.R. §§ 42.8(a)(3), (b)(2).

Claim(s)	35 U.S.C. §	Reference(s)/ Basis	Claim(s) Shown Unpatentable	Claim(s) Not Shown Unpatentable
1, 3–7, 9, 11, 13, 14, 16–20, 22, 24, 26, 27, 29–33, 35–37, 40, 41, 43–47, 49–51, 54	102	Zhang	1, 3–7, 9, 11, 13, 14, 16–20, 22, 24, 26, 27, 29–33, 35–37, 40, 41, 43–47, 49–51, 54	
1, 3–7, 9, 11, 13, 14, 16–20, 22, 24, 26, 27, 29–33, 35–37, 40, 41, 43–47, 49–51, 54	103(a)	Zhang	1, 3–7, 9, 11, 13, 14, 16–20, 22, 24, 26, 27, 29–33, 35–37, 40, 41, 43–47, 49–51, 54	
9–12, 22–25, 27, 29–33, 35–41, 43–47, 49–55, 57–61, 63–69, 71–75, 77–82	103(a)	Zhang, Reisman	9–12, 22–25, 27, 29–33, 35–41, 43–47, 49–55, 57–61, 63–69, 71–75, 77–82	
2–6, 15–19, 28–32, 42–46	103(a)	Zhang, Jackson	2–6, 15–19, 28–32, 42–46	
28–32, 42–46, 56–60, 70–74	103(a)	Zhang, Reisman, Jackson	28–32, 42–46, 56–60, 70–74	
1, 3–9, 11, 13, 14, 16–22, 24, 26, 34–36, 48–50	103(a)	Zhang, Pandey	1, 3–9, 11, 13, 14, 16–22, 24, 26, 34–36, 48–50	
9–12, 22–25, 34–36, 48–50, 62–64, 76–78	103(a)	Zhang, Reisman, Pandey	9–12, 22–25, 34–36, 48–50, 62–64, 76–78	
2–6, 15–19	103(a)	Zhang, Pandey, Jackson	2–6, 15–19	
Overall Outcome			1–82	

V. ORDER

In consideration of the foregoing, it is hereby

ORDERED that claims 1–82 of the ’866 patent have been shown to be unpatentable; and

FURTHER ORDERED that, because this is a Final Written Decision, parties to the proceeding seeking judicial review of the decision must comply with the notice and service requirements of 37 C.F.R. § 90.2.

FOR PETITIONER:

Frederic Meeker
Michael S. Cuviello
Harry W. Porter
Paul T. Qualey
Joshua L. Davenport
Craig W. Kronenthal
BANNER & WITCOFF, LTD.
fmeeker@bannerwitcoff.com
mcuviello@bannerwitcoff.com
wporter@bannerwitcoff.com
pqualey@bannerwitcoff.com
jdavenport@bannerwitcoff.com
ckronenthal@bannerwitcoff.com

FOR PATENT OWNER:

Jason A. Engel
Erik J. Halverson
Kyle M. Kantarek
Nolan R. Hubbard
Matthew A. Blair
K&L GATES LLP
jason.engel.ptab@klgates.com
erik.halverson@klgates.com
kyle.kantarek@klgates.com

nolan.hubbard@klgates.com
matthew.blair@klgates.com

Kenneth J. Weatherwax
Parham Hendifar
Nathan Lowenstein
Colette Woo
Kenneth Wang
LOWENSTEIN & WEATHERWAX LLP
weatherwax@lowensteinweatherwax.com
hendifar@lowensteinweatherwax.com
lowenstein@lowensteinweatherwax.com
woo@lowensteinweatherwax.com
wang@lowensteinweatherwax.com