UNITED STATES PATENT AND TRADEMARK OFFICE

BEFORE THE PATENT TRIAL AND APPEAL BOARD

COMCAST CABLE COMMUNICATIONS, LLC,
Petitioner,

v.

ENTROPIC COMMUNICATIONS, LLC,
Patent Owner.

Case IPR2025-00180
Patent 11,785,275

PATENT OWNER'S SUR-REPLY

TABLE OF CONTENTS

Page

I. INTRODUCTION 1

II. PETITIONER'S MAPPING 1: CHANNELS C_1-C_N FAIL TO DISCLOSE THE CLAIMED "DESIRED CHANNELS" EVEN IF THEY WERE NOT ALL CHANNELS IN THE ENTIRE SIGNAL BAND. 1

A. Even If Channels C_1-C_n Were Desired Channels, They Still Fail To Disclose The Claims Because They Are Not Output To Demodulators. 3

B. Petitioner's Argument That Zhang Channels C_1-C_n Are "Selected" Contradicts Zhang's Express Embodiments. 7

C. Zhang's Reference To Individual Channels As "Target" Channel Does Not Alter Zhang's Operation Or The Petition's Collective Reliance On All Channels C_1-C_n. 13

D. Petitioner's New Obviousness Theory Based On Modification Of Zhang Is Both Untimely And Unsupported. 15

E. Petitioner Misapprehends Patent Owner's Argument As Requiring a Negative Limitation. 18

III. PETITIONER'S MAPPING 2 FAILS BECAUSE ZHANG'S CHANNELS D_1–D_M ARE NOT SELECTED "FROM THE DIGITIZED SIGNAL" AS REQUIRED BY THE CLAIMS. 20

IV. THE OFFICE HAS REPEATEDLY REJECTED ZHANG AND SIMILAR REFERENCES. 27

V. CONCLUSION 30

TABLE OF AUTHORITIES

Page(s)

COURT DECISIONS

August Tech. Corp. v. Camtek, Ltd.,
655 F.3d 1278 (Fed. Cir. 2011) 19

In re Felton,
484 F.2d 495 (CCPA 1973) 5

Intelligent Bio-Sys., Inc. v. Illumina Cambridge Ltd.,
821 F.3d 1359 (Fed. Cir. 2016) 15

Metalcraft of Mayville, Inc. v. Toro Co.,
848 F.3d 1358 (Fed. Cir. 2017) 18

Plas-Pak Indus., Inc. v. Sulzer Mixpac AG,
600 Fed. Appx. 755 (Fed. Cir. 2015) 17

In re Ratti,
270 F.2d 810 (CCPA 1959) 17

In Touch Techs., Inc. v. VGO Commc'ns, Inc.,
751 F.3d 1327 (Fed. Cir. 2014) 18

TIP Sys., LLC v. Phillips & Brooks/Gladwin, Inc.,
529 F.3d 1364 (Fed. Cir. 2008) 20

Wasica Fin. GmbH v. Cont'l Auto. Sys.,
853 F.3d 1272 (Fed. Cir. 2017) 15

PTAB DECISIONS

DISH Network LLC v. Sound View Innovations LLC,
IPR2020-01276, Paper 40 (Feb. 8, 2022) 16

Ecto World LLC and SV3, LLC v. Rai Strategic Holdings, Inc.,
IPR2024-01280, Paper 13 (May 19, 2025) 28

OTHER AUTHORITIES

Consolidated Trial Practice Guide (Nov. 2019) 16

EXHIBIT LIST	
2001	Table Of Parallel Petitions Filed By All Petitioners (July 16, 2019-January 31, 2025) [All-Parallel-Petitions]
2002	Table of All Petitions Filed By Comcast (As Petitioner or RPI) (2016-2025) [All-Comcast-Petitions]
2003	PTAB Multiple Petitions Study [Multiple-Petitions-Study]
2004	PTAB Multiple Petitions Study Executive Summary [Executive-Summary]
2005	FreeWheel About Webpage (www.freewheel.com/about)
2006	Declaration of Kenneth K. Wang [Wang-Decl.]
2007	Director Vidal's June 21, 2022, Memorandum Regarding Discretionary Denial With Co-Pending District Court Litigation [Interim-Denial-Memo]
2008	Reserved
2009	Email Request For Director Review [PainTEQ-Email-Request]
2010	Formal Request For Director Review [PainTEQ-Rehearing-Request]
2011	Declaration of Nathan Lowenstein In Support Of *Pro Hac Vice* Admission
2012	Exhibit 2012 To Deposition Of David Lett Dated July 23, 2025: Errata For Depositions Dated December 10-11 2024
2013	Declaration of Samuel H. Russ, Ph.D. [Russ-Decl.]
2014	Curriculum Vitae of Samuel H. Russ, Ph.D. [Russ-CV]
2015	European Patent Application No. 02759732.7.2415 Communication From Examining Division [EPO-Communication-Annex]

2016	European Patent Application No. 02759732.7.2415 Reply To Communication From Examining Division [Zhang-EPO-Reply]
2017	European Patent Application No. 02759732.7.2415 Intent To Grant European Patent [EPO-Grant-Intent]
2018	U.S. Patent 11,381,866 [’866-Patent]
2019	Deposition Of David Lett Dated December 10, 2024 [Lett-Depo.]
2020	Deposition Of David Lett Dated December 11, 2024 [Lett-Depo.]
2021	Deposition Of David Lett Dated May 20, 2025 [Lett-Depo.]
2022	Deposition Of David Lett Dated July 23, 2025 [Lett-Depo.]
2023	U.S. Pat. No. 6,704,372 [Zhang-Patent]
2024	Information Disclosure Statement submitted during the prosecution of the ’275 patent [IDS]
2025	Notice Of Allowance for the ’275 patent [NOA]
2026	*Comcast Cable Communications LLC v. Entropic Communications LLC*, IPR2024-00432, Paper 28 [Comcast-Reply]
2027	*Comcast Cable Communications LLC v. Entropic Communications LLC*, IPR2024-00438, Exhibit 1078 [Lett-Decl.]
2028	Information Disclosure Statement filed June 18, 2024 in Reexamination No. 90/019,255
2029	Applicant’s Arguments filed June 18, 2024 in Reexamination No. 90/019,255
2030	Non-Final Office Action mailed August 7, 2024 in Reexamination No. 90/019,255
2031	Deposition Of David Lett Dated December 16, 2025 [Lett-Depo.]

I. INTRODUCTION

The Reply fails to show how Zhang's fundamentally different architecture discloses or renders obvious the claims. Each set of channels C_1-C_n and D_1-D_m alternatively relied upon by Petitioner as the claimed "desired channels" fails to meet at least one claim limitation.

II. PETITIONER'S MAPPING 1: CHANNELS C_1-C_n FAIL TO DISCLOSE THE CLAIMED "DESIRED CHANNELS" EVEN IF THEY WERE NOT ALL CHANNELS IN THE ENTIRE SIGNAL BAND.[1]

The claims require "selecting . . . the plurality of desired channels," and "outputting . . . the selected plurality of desired channels to at least one demodulator." Ex. 1001 ['275] 12:35-40. In its first alternative (Mapping 1), Petitioner maps Zhang's channels C_1-C_n to the claimed "plurality of desired channels." The POR (14-37) showed that Zhang's channels C_1-C_n are the channels

[1] The Board in earlier proceedings, currently pending review before the Director, found that Zhang's channels C_1-C_n are not all the channels in the entire signal band. *See, e.g.*, Ex. 1090, 23. Patent Owner respectfully disagrees with that finding. Nonetheless, even if that were the case, Petitioner's reliance on channels C_1-C_n fails because those are not "the plurality of desired channels" output to demodulators. *See* Section II.A, *infra*.

in the "entire signal band" that Zhang indiscriminately demultiplexes from the digitized input signal. Thus, they are neither "desired channels" nor "selected."

The Reply asserts that Zhang's channels C_1-C_n are merely a subset of the channels in the input signal and therefore constitute "desired channels" that are "selected." That effort fails for multiple independent reasons. First, ***even if Zhang channels C_1-C_n were not all the channels in the input signal***, Mapping 1 still fails. The claims require that the same "plurality of desired channels" that is "select[ed]" in limitation 1[e] be "output . . . to at least one demodulator" in limitation 1[f]. Ex. 1001 ['275] 12:35-40. Zhang does not output channels C_1-C_n to demodulators. It outputs channels D_1-D_m. Accordingly, channels C_1-C_n cannot satisfy the " plurality of desired channels" across limitations 1[e] and 1[f]. *See* Section II.A, *infra*.

Zhang channels C_1-C_n are not "selected" either. Both of Zhang's disclosed embodiments, including Zhang's only numerical example, expressly disclose that channels C_1-C_n are all the channels in the entire signal band. *See* Sections II.B-C, *infra*.

Failing on Zhang's own disclosure, Petitioner pivots to a belated obviousness theory: that a POSITA would have modified Zhang so that channels C_1-C_n are not all channels in the entire signal band. *See* Section II.D, *infra*. This

argument, in addition to being untimely, is also unsupported and contrary to Zhang's principle of operation and considered architectural design.

Finally, Petitioner mischaracterizes Patent Owner's position as requiring that Zhang must "not select any undesired channels." *See* Section II.E, *infra*. By indiscriminately demultiplexing all channels, Zhang performs no selection at all, whether only desired channels or desired channels and some undesired channels.

These points are detailed below.

A. Even If Channels C_1-C_n Were Desired Channels, They Still Fail To Disclose The Claims Because They Are Not Output To Demodulators.

Even if Zhang channels C_1-C_n were not all the channels in the entire signal band, Petitioner's reliance on channels C_1-C_n still fails. This is because the claims require the same "desired channels" that are "selected" must also be "output … to at least one demodulator." In Zhang, it is channels D_1-D_m, not C_1-C_n, that are output to demodulators. D_1-D_m is, by design, only a subset of C_1-C_n.[2]

[2] The Board in earlier proceedings quoted Petitioner's counsel at oral argument for the new proposition that "C_1 is the exact same thing as D_1. C_2 is the exact same as D_2. And so on and so forth." *See, e.g.*, Ex. 1090, 26. Patent Owner respectfully submits that the Board misunderstood Petitioner, which does not

Claim 1 recites that the same "plurality of desired channels" are "selected" in limitation 1[e] must be "output" to demodulators in limitation 1[f]:

> 1[e] ***selecting***, by a digital frontend (DFE) coupled to the ADC, ***the plurality of desired channels*** from the digitized signal; and
>
> 1[f] ***outputting***, by the DFE, ***<u>the selected</u> plurality of desired channels*** to at least one demodulator as a digital datastream, ….

Ex. 1001 ['275] 12:35-40.

It is well-settled law that the term "the" invokes antecedent basis and requires repetition of the same previously recited element. *See* POR, 40-41 (citing cases). In Zhang, however, as the POR (at 35-38) explained, it is channels D_1-D_m, not channels C_1-C_n, that are output to demodulators:

---

dispute that there is no one-to-one correspondence between D_1-D_m and C_1-C_n, and that D_1-D_m is by design a subset of C_1-C_n. *See also* POR, 8-10, 17-19. Petitioner's argument, as noted below, revolves around the happenstance where Zhang selects all channels C_1-C_n for transmission to demodulators.

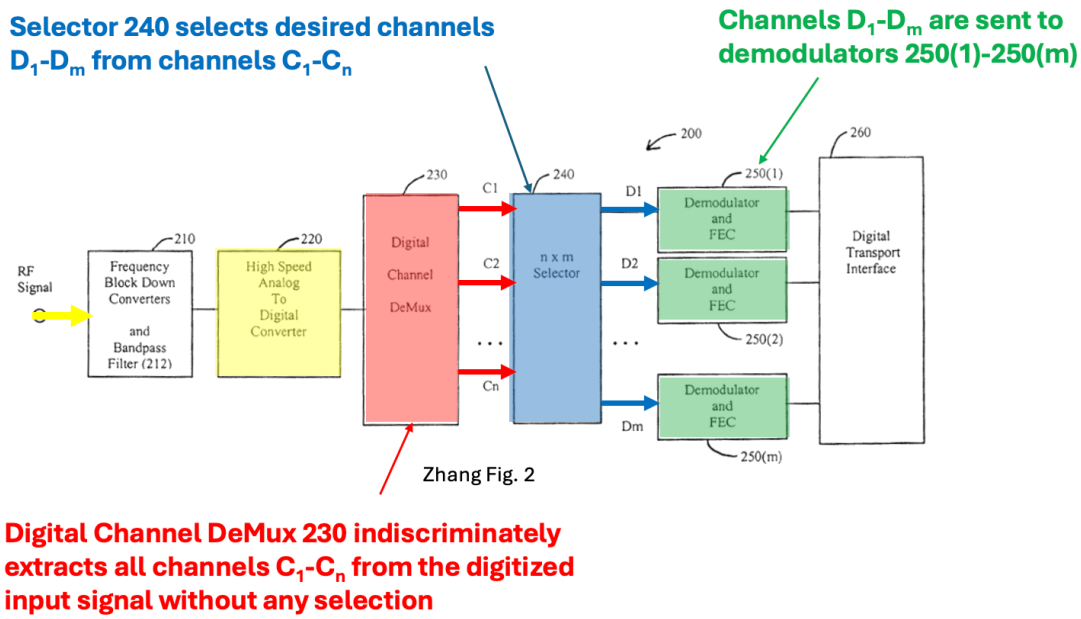

Zhang expressly confirms that it is channels D_1-D_m that are sent to demodulators:

> digital selector 500 digitally ***selects one or more RF channels D_1 to D_m from the digital RF channels C_1 to C_n*** and then ***sends them to appropriate demodulators*** ….

Ex. 1013 [Zhang] [0039].

Petitioner responds that "all of C_1-C_n are clearly output as D_1-D_m when m=n." Reply, 26. However, the theoretical happenstance that all extracted channels C_1-C_n could subsequently be selected as the desired channels D_1-D_m cannot disclose the claimed method. POR 37-38 (citing cases). In response, the Reply (at 27) argues that because each of "n" and "m" can be "one or more," then it supposedly follows that it is an "expressly disclosed embodiment in Zhang" to

select all channels D_1-D_m from channels C_1-C_n. But Petitioner's logic does not follow. Zhang's selector exists to choose a subset D_1-D_m of channels C_1-C_n for demodulation, not to output all channels C_1-C_n. Even if Zhang might by happenstance sometimes select all channels C_1-C_n to be sent to demodulators, it does not disclose a method in which the same plurality of channels that is extracted from the digitized signal is output to demodulators.

Petitioner next argues that in fact "[c]hannels D_1-D_m are channels C_1-C_n and only relabeled as they pass through the selector 240 to reflect the different ways they are transferred to demodulators 250." Reply, 27. But as explained at length at the POR (at 15-20), channels D_1-D_m are a subset of channels C_1-C_n. Even if some channel overlap exists between the two sets, they are not the same plurality of channels. *See also* Ex. 1013 [Zhang] [0028] (explaining its fast channel change capabilities because "only the selected channels [D_1-D_m] are later demodulated.").

Finally, Petitioner argues that because different channels D_1-D_m may be selected from C_1-C_n over time, all channels C_1-C_n will "eventually" be sent to demodulators. Reply 26. Nothing in Zhang discloses Petitioner's assertion. Furthermore, even if Petitioner were correct that, as a matter of pure statistics, all channels C_1-C_n may ultimately be sent to demodulators in a long enough time period, that does not disclose the claimed "method." The infinite monkey theorem does not disclose a method of composing literature.

Accordingly, Zhang's channels C_1-C_n cannot satisfy the requirement that the same "plurality of desired channels" be both selected and output to demodulators, even if they were "desired channels."

B. Petitioner's Argument That Zhang Channels C_1-C_n Are "Selected" Contradicts Zhang's Express Embodiments.

Petitioner's reliance on Zhang's channels C_1-C_n as the claimed "desired channels" fails for an additional, independent reason. As the POR (15-19) explained, Zhang's disclosures establish that channels C_1-C_n are all the channels in the entire signal band. Because they are indiscriminately demultiplexed from the digitized input signal, they are not "selected."

Any conceivable ambiguity is eliminated by Zhang's only numerical example. It is undisputed by both experts that Zhang's Figure 6 embodiment—the sole embodiment with concrete numerical values—expressly discloses that channels C_1-C_n correspond to all channels in the entire signal band. Ex. 2022 [Lett-Depo.] 44:13-17; Ex. 2013 [Russ-Decl.] ¶¶ 56-57. In that embodiment, the signal band spans 210 MHz and contains 35 channels C_1-C_{35}, each 6 MHz wide. The arithmetic is exact: 35 channels, at 6 MHz each, equal 210 MHz.

To argue that Zhang channels C_1-C_n are not all the channels in the entire signal band, Petitioner relies on an isolated statement in Zhang's discussion of Figure 2 that "C_1-C_n contain content channels that are selected or used by a

subscriber." Ex. 1013 [Zhang] [0028] (cited by Reply, 16). But this isolated statement does not change Zhang's overall disclosure.

First, Zhang clearly states that its Fig. 2 embodiment operates similarly to its Fig. 6 embodiment, where Zhang explicitly discloses that C_1-C_{35} are all the channels in the entire signal band:

> FIG. 6 is a simplified high-level block diagram of an exemplary multi-channel demodulator 600 according to another embodiment of the present invention. Demodulator 600 ***operates similarly to demodulator 200 of FIG. 2***.

Ex. 1013 [Zhang] [0041].

A side-by-side comparison confirms this: Figure 6 assigns concrete values (n = 35, m = 20) to the same variables used abstractly in Figure 2:

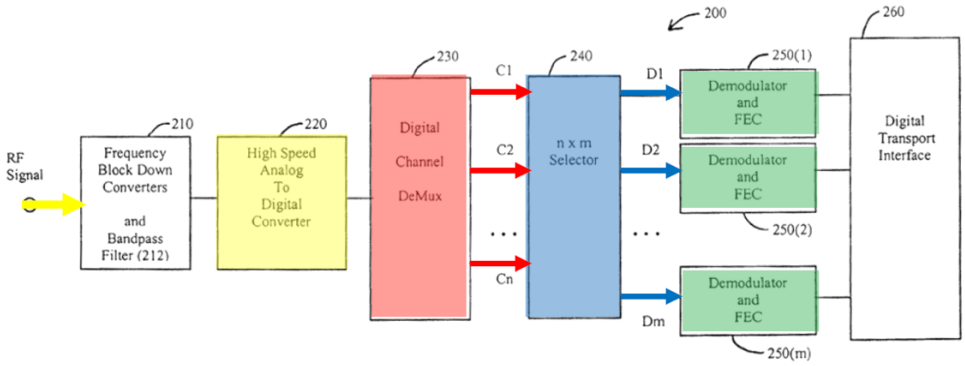

Fig. 2

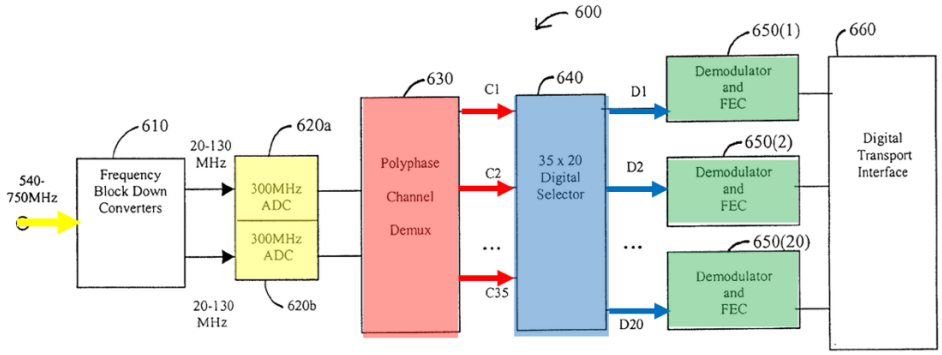

210 MHz = 35 channels x 6 MHz

Fig. 6

Second, as explained in POR, 15-21, the complete discussion of the Figure 2 embodiment confirms that channels C_1-C_n represent all channels in the entire signal band:

[0023] ***FIG. 2*** is a ... block diagram of an exemplary multi-channel demodulator 200 according to ***an embodiment of the present invention***.

¶¶ [0023]-[0029] Discuss Fig. 2

[0027] An ADC 220 then converts the down-converted multi-channel analog RF signal to a multi-channel digital RF signal. In this specific embodiment, ADC 220 is a high speed ADC so that ***an entire signal band with n channels*** can be converted.

Both Experts: 'n' Is The Number Of Channels In The "Entire Signal Band." POR, 16

[0028] A digital channel demultiplexer 230 then ***demultiplexes the multi-channel digital RF signal into separate digital RF channels C1 to Cn***. .... Still referring to FIG. 2, an n×m digital ***selector 240 receives the demultiplexed digital RF channels C_1 to C_n and then selects one or more of the RF channels D_1 to D_m from one or more of the digital RF channels C_1 to C_n***. ***RF channels C_1 to C_n contain content channels that are selected or used by a subscriber.*** Channel-search capabilities of the ***digital selector 240*** renders it much faster than traditional analog channel switching through RF tuners. ***This is because only the selected channels are later demodulated unlike the systems using RF tuners which demodulate all of the RF channels.***

Demultiplex **Input Signal "*Into Separate … Channels*" C_1-C_n. No Selection.**

Selector 240 Selects Desired Channels D_1-D_m From Channels C_1-C_n

RF Channels C_1-C_n Each Contain 18 Content Channels, Including Those Used By Subscribers. *See also* Ex. 1013, ¶42.

Because Of Selector 240 That Selects D_1-D_m, Zhang Is Unlike Systems That "Demodulate All of The RF Channels" C_1-C_n

Ex. 1013 [Zhang] [0027]-[0028]. Read as a whole, Zhang's disclosure distinguishes between indiscriminately demultiplexing all channels C_1-C_n and subsequently selecting a subset of those channels (D_1-D_m) for demodulation.

Petitioner argues that "practical television receiver architectures at the time" confirm that Zhang channels C_1-C_n are not all the channels in the entire signal band. Reply, 18. Specifically, Petitioner argues that because "receivers received input signals having over a hundred ***television channels***," "Zhang certainly would not have mandated demultiplexer 230 to include a multiplier-filter chain for ***each RF channel***." *Id*. But Zhang's Fig. 6 embodiment decisively proves Petitioner wrong. There, Zhang explains that the input signal contains 35 RF channels, each having 18 television channels, for a total of ***630 television channels***. Ex. 1013 [Zhang] [0042]. Yet, Zhang discloses that its demultiplexer demultiplexes all 35 RF channels C_1-C_{35}, containing 630 television channels. *Id*. Furthermore, Petitioner ignores that Zhang's system is not a single-user home tuner, but a system designed to service many different subscribers. *See* Section II.D, *infra*.

Next, the Reply (19) argues that channels C_1-C_n must be fewer than all channels because they may be non-contiguous, and a POSITA would not have been motivated to extract intervening "aeronautical radionavigation channels." This argument fails. The claims require "***broadcast channels comprising*** a plurality of desired channels and ***a plurality of undesired channels***." To the extent

Petitioner relies, as the claimed undesired channels, on "aeronautical radionavigation channels" or other frequency ranges intervening between channels C_1-C_n, it needed to show that those intervening frequencies are "broadcast channels." Petitioner has failed to show that intervening frequencies are even "channels," let alone "broadcast channels."

Finally, as the POR (at 20-21) explained, Zhang's European prosecution history further confirms that channels C_1-C_n are all the channels in the entire signal band. There, Zhang's applicant explained that the provision of selector 240 distinguishes Zhang from prior art systems because, unlike those systems, Zhang does not demodulate "all of the RF channels." Ex. 2016 [Zhang-EPO-Reply] 2-3. This statement necessarily presumes that channels C_1-C_n represent "all of the RF channels" prior to selection. Absent selector 240, Zhang would operate like prior art systems that demodulated all channels, by sending "all of the RF channels" C_1-C_n to the demodulators.

The Reply (22) attempts to discount the European prosecution history by arguing that Patent Owner did not submit the full EP application or cited references. But Petitioner identifies no document that contradicts the cited statements, submits no competing prosecution materials, and its expert admitted that he did not attempt to locate or review any additional prosecution documents. Ex. 2021 [Lett-Depo.] 112:5-14. Furthermore, the relevance of the European

prosecution is not what the cited prior art disclosed, but that Zhang's applicant characterized its own system as demultiplexing all RF channels prior to selection.

Accordingly, Petitioner's assertion that channels C_1-C_n are "selected" contradicts Zhang's express embodiments, numerical example, and prosecution history. As explained in the following section, Petitioner's misleading reliance on out of context statements by Zhang referring to individual channels as "target channels" does not change Zhang's operation.

C. Zhang's Reference To Individual Channels As "Target" Channel Does Not Alter Zhang's Operation Or The Petition's Collective Reliance On All Channels C_1-C_n.

Petitioner primarily points to Zhang's use of the terms "desired" and "target," asserting that "it defies common sense for a POSITA to read Zhang's reference to C_1-C_n as 'desired channels' and believe that they must include undesired channels." Reply 15–16. This argument rests on a fundamental mischaracterization of Zhang's disclosure and the Petition's own mapping.

First, contrary to Petitioner's assertion, Zhang does not refer to channels C_1-C_n collectively as "desired channels." Zhang uses the terms "target" or "desired" only in the narrow, path-specific context of an individual extraction chain. When Zhang describes one complex-multiplier/filter path that is configured to extract a particular channel C_n, it refers to that particular channel as the "target" or "desired" channel for that path, and treats the remaining channels C as "undesired" for that

same path. POR 24–28. This path-specific distinction does not imply system-level selection where C_1-C_n are collectively desired channels instead of all channels:

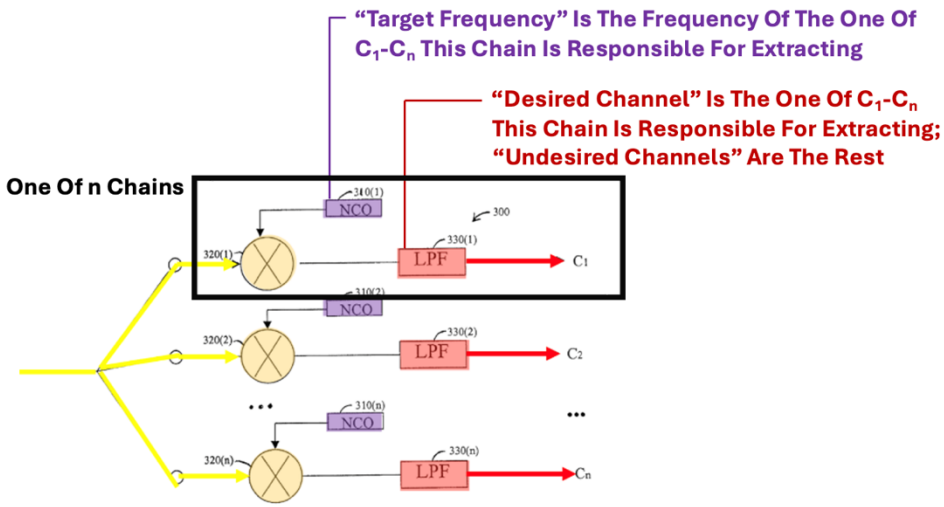

Fig. 3

Even in this path-specific context, the "undesired channels" are simply the other channels C within C_1-C_n that are simultaneously being extracted in parallel by the other paths. When all paths are considered together, channels C_1-C_n still represent all channels in the entire signal band that are indiscriminately demultiplexed from the digitized input signal.

Second, the Petition did not rely on the selection of one or a few channels from among C_1-C_n. It relied on all channels C_1-C_n collectively as the claimed "plurality of desired channels." The Petition expressly states:

> Zhang discloses demultiplexer 230 (claimed "digital frontend (DFE)") coupled to ADC 220 (claimed "ADC") and ***selecting the target RF***

> ***channels C1-Cn (claimed "desired channels"*** from the multi-channel digital RF signal (claimed "digitized signal" ….

Pet., 31 (citations omitted).

Thus, Zhang's per-path labeling of an individual channel as "desired" does not transform the collective output of demultiplexer 230 — channels C_1-C_n — into a selected subset of channels, nor does it alter the fact that Petitioner relied on all channels C_1-C_n collectively as the claimed "desired channels."

D. Petitioner's New Obviousness Theory Based On Modification Of Zhang Is Both Untimely And Unsupported.

Recognizing that Zhang expressly discloses demultiplexing all channels C_1-C_n in the entire signal band, the Reply asserts for the first time that "it would have at least been obvious that C_1-C_n do not include all channels in the input signal." Reply 19. This new theory is both untimely and unsupported.

First, the Petition argued that Zhang "discloses" selecting desired channels, which the Petition mapped to all of C_1-C_n. Pet., 31. The Reply's new obviousness theory (at 19) is thus untimely. *DISH Network LLC v. Sound View Innovations LLC*, IPR2020-01276, Paper 40, 32 (Feb. 8, 2022); Consolidated Trial Practice Guide, 73 (Nov. 2019); *Wasica Fin. GmbH v. Cont'l Auto. Sys*., 853 F.3d 1272, 1285-1286 (Fed. Cir. 2017); *Intelligent Bio-Sys., Inc. v. Illumina Cambridge Ltd.*, 821 F.3d 1359, 1369 (Fed. Cir. 2016).

The Reply (at 19) suggests that the Petition foreshadowed its obviousness theory by discussing some of the motivations now proffered to modify Zhang to demultiplex less than all channels C_1-C_n. But the Petition only provided a discussion of modifying Zhang so that "desired channels" would not be "contiguous"; it did not provide any discussion to modify Zhang so that channels C_1-C_n would not be all the channels in the entire signal band. Pet., 22-23.

Even if the Reply's new theory were considered, it fails on the merits. The Reply (at 19) asserts that "[a] POSITA would have also been motivated to only demultiplex channels that a user is interested in (or subscribed to) to reduce costs by omitting unnecessary multiplier-filter chains for undesired channels." That assertion is unsupported and contrary to Zhang's considered architecture.

Petitioner's modification of Zhang would transform Zhang from a multi-subscriber system into a single-subscriber system. Zhang is designed to service many demodulators. *See*, *e.g.*, Ex. 1013 [Zhang] [0042] (20 different demodulators). Furthermore, each RF channel contains 18 different content channels, and a given RF channel must be extracted from the input signal even if only one of those content channels needs to be demodulated. *Id*; see also Ex. 2031 [Lett-Depo.] 233:1-10. Nothing in Zhang discloses, suggests, or motivates a sophisticated logic that dynamically tracks which of many content channels each of many users is subscribed to, maps those dynamic subscriptions to corresponding

RF channels, and selectively enables or disables multiplier-filter chains on that basis. Instead, Zhang makes a clear architectural decision that for a multi-subscriber system, it is more efficient to indiscriminately demultiplex all RF channels C_1-C_n in the entire signal band, and then use selector 240 to allow users to rapidly switch among them.[3]

Petitioner's proposed change to Zhang's fundamental system architecture "is unlikely to motivate" a POSITA. *Plas-Pak Indus., Inc. v. Sulzer Mixpac AG*, 600 Fed. Appx. 755, 759 (Fed. Cir. 2015); *see also In re Ratti*, 270 F.2d 810, 813 (CCPA 1959) (holding that a proposed combination of references is not proper where it would change the basic principles of operation of one of the references). Instead, Petitioner's proposed modification rewrites Zhang's architecture using only hindsight derived from the challenged claims. *Metalcraft of Mayville, Inc. v.*

[3] Petitioner's Reply declaration also states, in an opinion not discussed in the Reply, that "[i]f a user was not authorized to watch a particular channel, there would be no reason to include it in channels C_1-C_n, and thus it would be an undesired channel." Ex. 1085, ¶ 85. Besides the fact that Mr. Lett ignores that Zhang's system services many, not just one, users, he also testified that the way systems at the time enforced subscription was by encryption. Ex. 2031, 226:8-22, 228:24-230:10.

Toro Co., 848 F.3d 1358, 1367 (Fed. Cir. 2017); *In Touch Techs., Inc. v. VGO Commc'ns, Inc.*, 751 F.3d 1327, 1349 (Fed. Cir. 2014).

Accordingly, Petitioner's belated modification theory is procedurally barred, unsupported by Zhang, and inconsistent with Zhang's principle of operation.

E. Petitioner Misapprehends Patent Owner's Argument As Requiring a Negative Limitation.

Finally, to argue that Zhang's indiscriminate demultiplexing of all channels C_1–C_n discloses the limitation to "select the plurality of desired channels," Petitioner argues that the claims "place[] no requirement on how the system treats undesired channels," and contends that Patent Owner is improperly reading a "not selecting undesired channels" requirement into the claims. Reply, 22-23. Petitioner misapprehends Patent Owner's argument.

Patent Owner's argument does not rest on the assumption that the claims require selecting only desired channels without selecting any undesired channels. Rather, Patent Owner demonstrated that Zhang's Demultiplexer 230 does not perform any selection at all. It indiscriminately and blindly demultiplexes all channels C_1–C_n in the entire signal band. POR, 15-31. This is not a case where, for example, Zhang selects certain channels from the input RF signal, some desired and some undesired. For similar reasons, Petitioner's reliance on the use of "comprising" in the claim to argue that the claim does not "exclude" selecting

undesired channels is misplaced. Reply, 23. The issue is not what Zhang selects, but that it does not perform any selection at all.

Petitioner invokes a passage stating "[i]n one embodiment, N can be equal to the number of all available channels." Ex. 1001 ['275] 5:60-6:1 (cited by Reply, 24). But that alternative embodiment contrasts with the core disclosure that "N is an integer value corresponding to the number of desired RF channels." Ex. 1001 ['275] 5:58-59. Thus, if anything, the '275 patent confirms that "all available channels" is different from "desired RF channels." In fact, selecting desired channels instead of demultiplexing all channels is a main focus of the '275 patent. In its lead embodiment (Figure 2), the number of available channels is ten, but only four are designated as desired. Ex. 1001 ['275] 4:47-64. The system then selects and down converts only those four desired channels—not all ten. POR, 6-7. While the patent acknowledges that other configurations may be possible, every embodiment discussed in the specification involves selection of desired channels, not indiscriminate demultiplexing. Moreover, "[t]he mere fact that there is an alternative embodiment disclosed in the [asserted patent] that is not encompassed by [our] claim construction does not outweigh the language of the claim, especially when the court's construction is supported by the intrinsic evidence." *August Tech. Corp. v. Camtek, Ltd.*, 655 F.3d 1278, 1285 (Fed. Cir. 2011) (*quoting TIP*

Sys., LLC v. Phillips & Brooks/Gladwin, Inc., 529 F.3d 1364, 1373 (Fed. Cir. 2008)).

For the foregoing reasons, Petitioner's argument that Zhang's indiscriminate demultiplexing of all channels C_1–C_n in the entire signal band is "selecting" is unsupported and incorrect.

III. PETITIONER'S MAPPING 2 FAILS BECAUSE ZHANG'S CHANNELS D_1–D_M ARE NOT SELECTED "FROM THE DIGITIZED SIGNAL" AS REQUIRED BY THE CLAIMS.[4]

Petitioner's second mapping for limitation 1[e] relies on Zhang's channels D_1-D_m as the claimed "plurality of desired channels" that are selected by the DFE. As the POR (39–46) explained, this mapping fails because Zhang does not select channels D_1-D_m "from the digitized signal," as the claims expressly require. Instead, Zhang states unambiguously, using the same terminology as the claims,

[4] The Board previously disagreed with Patent Owner on a potentially similar argument. *See, e.g.*, Ex. 1092, 25-27. Patent Owner respectfully disagrees with the Board's decision, which is currently pending review before the Director. Nonetheless, Patent Owner's argument in this matter is supported by substantial and additional evidence not previously before the Board. *See, e.g.*, Section IV, *infra* (the Office during prosecution of the '275 patent finding that Zhang does not disclose the same "selecting … from the digitized signal" limitation).

that channels D_1-D_m are "select[ed] . . . from one or more of the digital RF channels C_1 to C_n." Ex. 1013 [Zhang] [0028]. Petitioner attempts to remedy this by expanding its mapping to map both Zhang's demultiplexer 230 and selector 240 to the claimed digital front end (DFE) that performs the claimed selection. However, the fundamental architecture of Zhang, where channels D_1-D_m are "select[ed] … from" channels C_1-C_n, does not change based on how Petitioner maps Zhang to the claims. These points are discussed below.

The claims require:

> 1[d] digitizing, by an analog-to-digital converter (ADC) coupled to the radio front end, the processed input signal to ***generate a digitized signal***;
>
> 1[e] ***selecting***, by a digital frontend (DFE) coupled to the ADC, the plurality of ***desired channels from the digitized signal***

Ex. 1001 ['275] 12:33–38.

Petitioner relies on channels D_1-D_m as the claimed "plurality of desired channels" but channels D_1-D_m are not selected "from the digitized signal" of limitation 1[d], as required. Specifically, as shown below, Petitioner maps the claimed "digitized signal" of limitation 1[d] to the **input of Zhang's demultiplexer 230**. Pet., 22, 30-31. But Zhang **channels D_1-D_m** are not selected

"from the digitized signal" identified by Petitioner, but from **channels C_1-C_n**. This is shown schematically below.

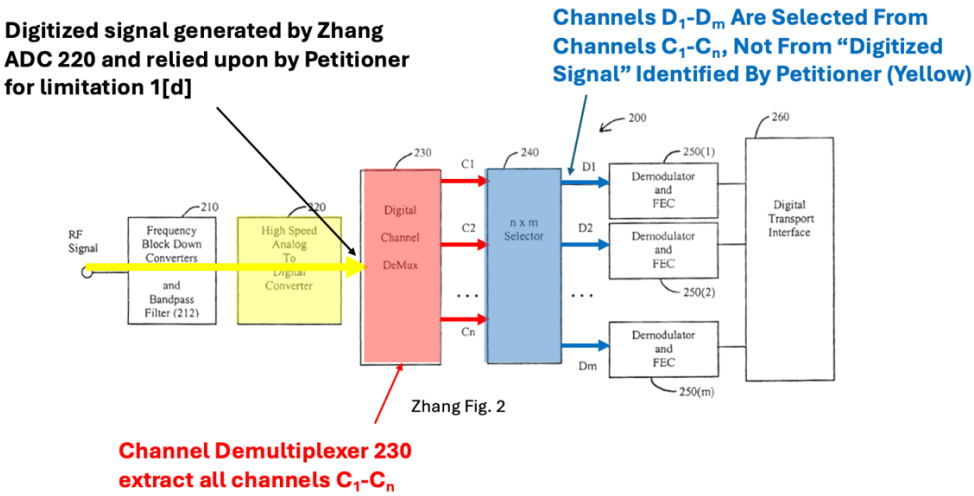

In fact, using the same terminology as the claims, Zhang expressly states that its channels D_1-D_m are "select[ed] … from one or more of the digital RF channels C_1 to C_n," not from the digitized input signal mapped by Petitioner:

Claim 1: desired channels are "select[ed] … from the digitized signal"	**Ex. 1013 [Zhang]: channels D1-Dm are "select[ed] … from one or more of the digital RF channels C1 to Cn"**
[1D] digitizing, by an analog-to-digital converter (ADC) coupled to the radio front end, the processed input signal to **generate a digitized signal** [1E] **selecting**, by a digital frontend (DFE) coupled to the ADC, **the plurality of desired channels from the digitized signal**	"An ADC 220 then **converts** the down-converted multi-channel analog RF signal **to a multi-channel digital RF signal**." [0027] "A digital channel demultiplexer 230 then demultiplexes **the multi-channel digital RF signal into separate digital RF channels C1 to Cn**." [0028] "an n×m digital selector 240 receives the demultiplexed digital RF channels C1 to Cn, and then **selects one or more of the RF channels D1 to Dm from one or more of the digital RF channels C1 to Cn**." [0028]

In response, Petitioner argues that it can simply draw a larger box around Zhang's demultiplexer 230 and selector 240 and label the combined circuitry as the claimed "digital front end." Reply 8–9. From this, Petitioner reasons that because the input to that enlarged box is the digitized signal and the output is channels D_1-D_m, the channels must be "selected from the digitized signal." *Id*. This logic does not follow.

Claim compliance depends on how the reference actually operates, not how expansively a petitioner defines block boundaries. Zhang expressly teaches that channels D_1-D_m are selected "from one or more of the digital RF channels C_1 to

C_n." Ex. 1013 [Zhang] [0028]. That remains true regardless of how Petitioner labels or groups Zhang's components. The issue is not what constitutes the DFE; the issue is where channels D_1-D_m are selected from.

No matter what is mapped to the claimed DFE, Zhang channels D_1-D_m are selected from channels C_1-C_n not from the digitized signal.

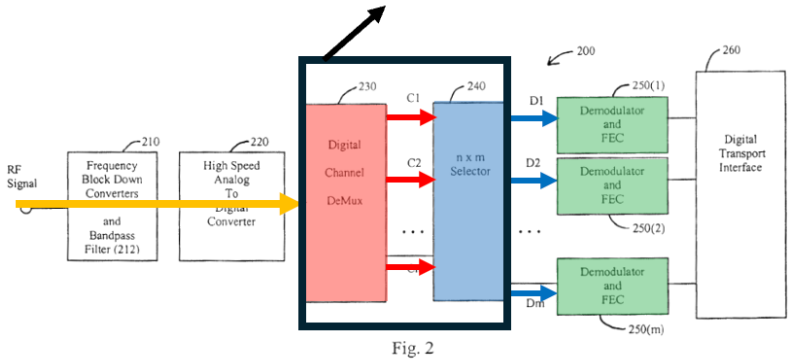

Fig. 2

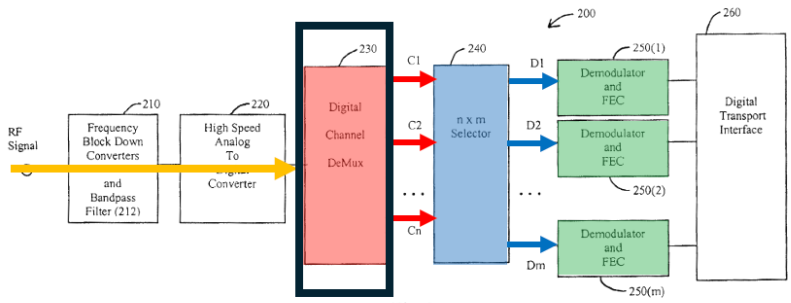

Fig. 2

Claims directed to methods are not satisfied by achieving the same result through a different process. "[T]he very details regarding how" a result is achieved are "at the heart of a process patent." *Amgen, Inc. v. Hoechst Marion Roussel*, 126 F. Supp. 2d 69, 101 (D. Mass. 2001), aff'd in relevant part, 314 F.3d 1313, 1346-1347 (Fed. Cir. 2003).

Petitioner also provides an annotation of Zhang's Figures 3 and 5 that is misleading. Reply, 10. Petitioner's annotation is produced below:

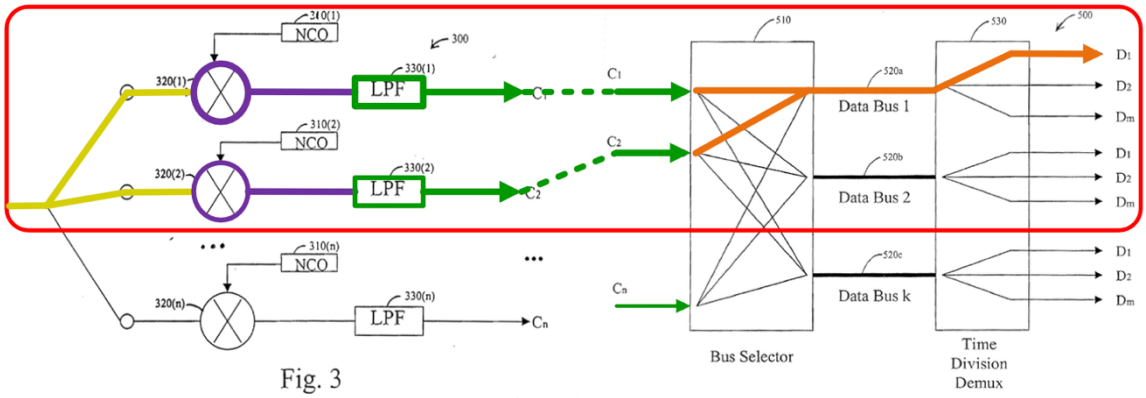

Ex. 1013, Figs. 3, 5 (annotated)

Reply, 11 (annotation Petitioner's).

On the left side of the annotation, Petitioner depicts circuitry from Zhang's Demultiplexer 230 (Figure 3). On the right side, Petitioner shows circuitry from Zhang's Selector 240 (Figure 5). The annotation appears to imply that two channels (depicted in purple) are selected by Demultiplexer 230 from the input signal (yellow), and then output by Selector 240 (orange). That implication is incorrect.

As explained above, Zhang's Demultiplexer 230 does not perform any selection. It indiscriminately demultiplexes all channels in the input signal. Any selection is performed by Selector 240. If the purple channels in the annotation represent the two channels ultimately selected and output by Selector 240 (orange), then that selection occurs at the Selector 240—not at the Demultiplexer 230 stage. Moreover, Selector 240 does not select from the yellow input signal. It selects

from the full set of demultiplexed channels C_1–C_n, which were previously separated by Demultiplexer 230.

Similarly, Petitioner's annotation, reproduced below with bold black annotations added, to argue that Zhang's method is identical to the claimed method is flawed:

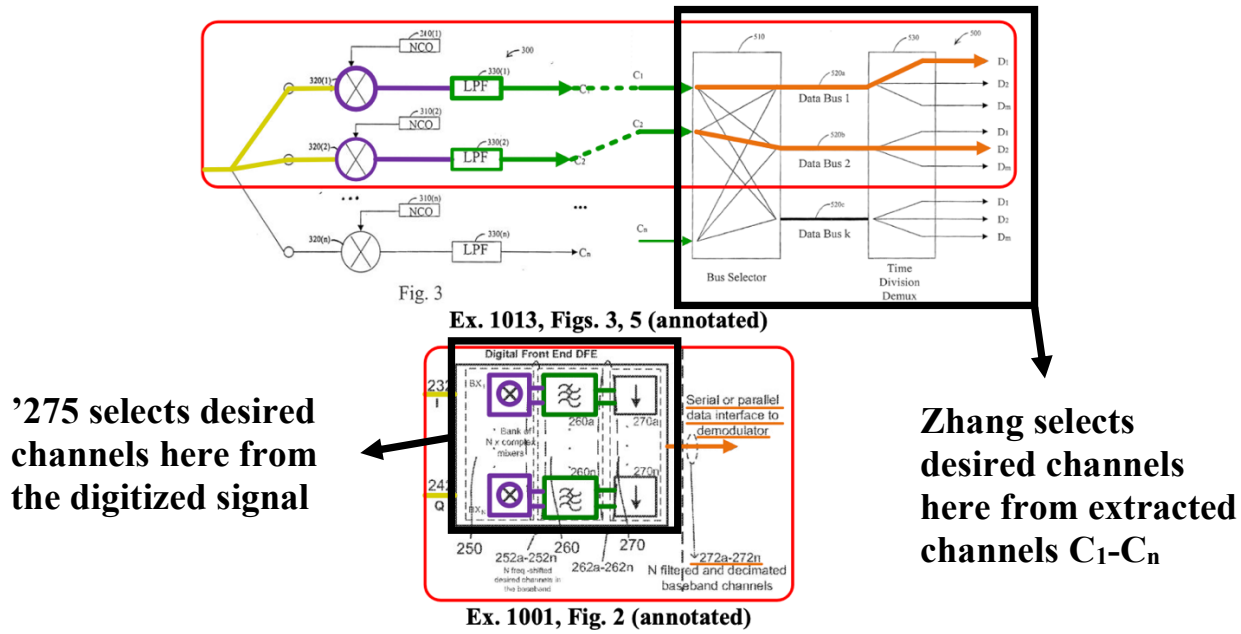

Reply 11 (bold black annotation added, other annotations Petitioner's).

Finally, Petitioner asserts that Patent Owner "does not dispute" that Zhang's circuitry is "different from that of the '275 patent," or that the difference is merely "the number of complex multipliers." Reply 11. That mischaracterizes Patent Owner's position. As the POR (22–23) explained, although both Zhang and the '275 patent use complex mixers and filters, their architectures are fundamentally

different. Zhang extracts all channels from the digitized input signal and only later selects desired channels. The ’275 patent extracts only desired channels from the digitized signal. The difference is not the number of multipliers, but what those multipliers extract: all channels versus only desired channels.

Accordingly, Petitioner’s Mapping 2 fails because Zhang’s channels D1–Dm are not selected “from the digitized signal,” as the claims require.

IV. THE OFFICE HAS REPEATEDLY REJECTED ZHANG AND SIMILAR REFERENCES.

As the POR (at 10–13) explained, during prosecution of the ’275 patent the Office considered Zhang and concluded—consistent with Patent Owner’s position here—that Zhang does not disclose selecting desired channels “from the digitized signal.” Petitioner offers no credible response.

Petitioner argues that Zhang was merely listed in an IDS, that the Examiner “dismissed” Zhang as relating to a different patent, and that the Notice of Allowance analyzed only a different reference, Claxton. Reply 27–28. Each contention is without merit.

First, when a reference was previously identified in an IDS, “the same or substantially the same prior art or argument previously was presented to the Office.” *Ecto World LLC and SV3, LLC v. Rai Strategic Holdings, Inc*., IPR2024-

01280, Paper 13, 3-4 (May 19, 2025). Because Zhang was listed in an IDS that was initialed by the Examiner, it was previously considered by the Office.

Second, far from "dismissing" Zhang, the examiner expressly stated in the notice of allowance that it had specifically considered the IDS that identified Zhang, "although" the prior art was cited in connection with other patents. Ex. 2025 [NOA] 6. That statement reflects consideration—not disregard.

Third, while the Examiner referenced Claxton in the Notice of Allowance, Claxton was cited illustratively to explain why "the prior art made of record," i.e., including Zhang, "do not teach selecting, by a digital frontend (DFE) coupled to the ADC, a plurality of desired channels from the digitized signal." *Id*., 7.

If that were not enough, Zhang and references similar to Zhang were rejected yet again by the Office in connection with the reexamination of U.S. Pat. 9,210,362, which shares the same specification as, and closely related claims with, the '275 patent.[5] Specifically, as detailed below, Zhang fails to disclose the '362

[5] On September 16, 2025, the Director issued a Memorandum titled "*PTAB Consideration Of Prior Findings Of Fact And Conclusions Of Law*." The Memorandum provides that the Board should reconcile its decisions with prior, contrary determinations of fact or law made by the Office in post-grant

patent limitation reciting "select said plurality of desired television channels from ***said digitized plurality of frequencies***," for similar reasons that it fails to disclose the '275 patent limitation reciting "selecting … the plurality of desired channels ***from the digitized signal***."

During that reexamination, the Zhang patent (which has substantially identical disclosure to the Zhang reference relied on here) was identified in an IDS. Ex. 2028 [IDS] 3 (reference no. 28). The Examiner stamped each page of the IDS, confirming consideration of the Zhang patent. *See generally id*.

After considering the prior art of record, including Zhang, the Examiner issued a Notice of Intent to Issue Reexamination Certificate, expressly concluding that the prior art failed to disclose the claimed selection requirement:

> ***the cited prior art of record fails to teach*** the system and method as disclosed in claims 1 and 11, comprising … a digital circuit (interpreted as element 230 in Figure 2 and also described in column 5, lines 49-60) to ***select plurality of desired television channels from the digitized plurality of frequencies*** and output the selected plurality of television channels to a demodulator as a digital stream.

---

proceedings of patents with substantially similar claims, with a more detailed explanation required when both proceedings rely on "substantially the same evidence and/or arguments." Memorandum, 1.

Ex. 1082 [NOA] 6.

The Examiner likewise rejected references similar to Zhang for the same reason. In that reexamination, the Examiner accepted Patent Owner's argument that McNeely—which selected "ranges of frequencies containing the desired channels"—did not satisfy the claims, explaining:

> In other words, rather than selecting (and outputting) the desired television channels, McNeely's FTM selects ranges of frequencies containing the desired channels (and undesired channels). (*id*. at 7:11-13). McNeely itself characterizes this as only a "preselection" because the outgoing signal still contains a mix of desired and undesired channels. (*id*. at 7:15-19). This is why McNeely still relies on the set-top boxes to actually tune to the desired channels before those channels can be demodulated.

Ex. 2030 [Non-Final Office Action] 10-11; *see also* Ex. 2029 [Response to Office Action] 10-11 (Patent Owner argument).

Accordingly, Petitioner's reliance on Zhang is not only unsupported by the reference's express disclosures, but is inconsistent with the Office's repeated and reasoned consideration of Zhang and closely related references.

V. CONCLUSION

For the foregoing reasons, Petitioner has failed to demonstrate that any of the claims are unpatentable.

Respectfully submitted,

/ Parham Hendifar /

Parham Hendifar (Reg. No. 71,470)
Nathan Lowenstein, *pro hac vice*
Kenneth J. Weatherwax (Reg. No. 54,528)
LOWENSTEIN & WEATHERWAX LLP

Date: December 30, 2025

CERTIFICATE OF COMPLIANCE WITH TYPE-VOLUME LIMITS

This Patent Owner Sur-Reply (the "Sur-Reply") consists of 5,549 words, excluding table of contents, table of authorities, certificate of service, this certificate, or table of exhibits. The Sur-Reply complies with the type-volume limitation of 5,600 words as mandated in 37 C.F.R. § 42.24. In preparing this certificate, counsel has relied on the word count of the word-processing system used to prepare the paper (Microsoft Word).

Respectfully submitted,

/ Parham Hendifar /

Date: December 30, 2025

CERTIFICATE OF SERVICE

The undersigned hereby certifies that the following documents were served by electronic service, by agreement between the parties, on the date signed below:

PATENT OWNER SUR-REPLY

EXHIBIT 2031

The names and addresses of the parties being served are as follows:

Frederic M. Meeker fmeeker@bannerwitcoff.com
Craig W. Kronenthal ckronenthal@bannerwitcoff.com
H. Wayne Porter wporter@bannerwitcoff.com
Paul T. Qualey pqualey@bannerwitcoff.com
Joshua L. Davenport jdavenport@bannerwitcoff.com
ComcastIPRService@bannerwitcoff.com.

Respectfully submitted,

/ Parham Hendifar /

Date: December 30, 2025