Comcast Communications v. Entropic Communications

IPR2025-00180
U.S. Pat. 11,785,275

Lowenstein & Weatherwax LLP
Parham Hendifar

Exhibit 2032

All Of Petitioner's Grounds Are Based On Zhang

Ground	References	Basis	Claims Challenged
A	Zhang	§102	1-3, 5, 7-13, 15, 17-20
B	Zhang	§103	1-3, 5, 7-13, 15, 17-20
C	Zhang-Pandey	§103	2-3, 12-13
D	Zhang-Zhang '933	§103	2, 12
E	Zhang-Mirabbasi	§103	4, 11-15, 17-20
F	Zhang-Dong	§103	5-6, 15-16
G	Zhang-Mirabbasi-Pandey	§103	12-13
H	Zhang-Mirabbasi-Zhang '933	§103	12
I	Zhang-Mirabbasi-Dong	§103	15-16

Pet., 15

Zhang-Patent Was Prominently Identified In An IDS To The Examiner During Prosecution

17/956,889 - GAU: 2644

Doc code: IDS
Doc description: Information Disclosure Statement (IDS) Filed

PTO/SB/08a (01-22)
Approved for use through 05/31/2024. OMB 0651-0031
U.S. Patent and Trademark Office; U.S. DEPARTMENT OF COMMERCE
Under the Paperwork Reduction Act of 1995, no persons are required to respond to a collection of information unless it contains a valid OMB control number.

INFORMATION DISCLOSURE STATEMENT BY APPLICANT (Not for submission under 37 CFR 1.99)	Application Number	17956889
	Filing Date	2022-09-30
	First Named Inventor	Madhukar Reddy
	Art Unit	
	Examiner Name	
	Attorney Docket Number	28427US16

U.S.PATENTS

Examiner Initial*	Cite No	Patent Number	Kind Code[1]	Issue Date	Name of Patentee or Applicant of cited Document	Pag Rel Fig
	1	6704372		2004-03-09	Zhang et al.	
	2	7265792		2007-09-04	Favrat et al.	
	3	7522901		2009-04-21	Dauphinee	

If you wish to add additional U.S. Patent citation information please click the Add button. Add

U.S.PATENT APPLICATION PUBLICATIONS Remove

Examiner Initial*	Cite No	Publication Number	Kind Code[1]	Publication Date	Name of Patentee or Applicant of cited Document	Pages,Columns,Lines where Relevant Passages or Relevant Figures Appear
	1	20070098089		2007-05-03	Li et al.	

If you wish to add additional U.S. Published Application citation information please click the Add button. Add

FOREIGN PATENT DOCUMENTS Remove

Examiner Initial*	Cite No	Foreign Document Number[3]	Country Code[2] i	Kind Code[4]	Publication Date	Name of Patentee or Applicant of cited Document	Pages,Columns,Lines where Releva Passages or Figures Appe
	1						

ALL REFERENCES CONSIDERED EXCEPT WHERE LINED THROUGH. /B.J.J/

Entropic Commu ons, LLC, Exhibit 2024
Page - 1
Comcast Corporation v. E c Communications, LLC

EFS Web 2.1.18

ALL REFERENCES CONSIDERED EXCEPT WHERE LINED THROUGH. /B.J.J/

	1	6704372		2004-03-09	Zhang et al.

Notice Of Allowance Expressly Referenced Consideration Of The Zhang-IDS

NOTICE OF ALLOWANCE

Claims 19-38 are allowed. The prior art comprising Information Disclosure Statements filed 16 August 2023 and 18 August 2023 was considered by the Examiner in view of the instant application. Although the prior art is from the applicant's other patents, i.e. US 8223,775, as part of Entropic Communications, LLC, the applicant, v. Charter communications, Inc. Civil Action and Entropic Communications, LLC v. DirectTV, LLC and Dish Network Corp., Civil Action, the prior art was related to a cable modem system and architecture but not as claimed in the instant application.

Ex. 2025 [NOA] 6

Examiner: "Prior Art Of Record" Fails To Disclose The "Select" Limitation Because They Separate An Input Signal Into Its Constituent Channels

NOTICE OF ALLOWANCE

The following is a statement of reasons for the indication of allowable subject matter: the prior art made of record teach a receiver for a wireless telecommunication system teach all of the adjacent frequency bands in the IF signal passed by a band pass filter in the radio frontend are converted to a digital signal by an ADC and then separated into their respective frequency bands by a channelizer where the separated frequency bands are processed in the normal manner by subsequent DSP devices, see Claxton et al. US 6,735,421. The prior art made of record do not teach selecting, by a digital frontend (DFE) coupled to the ADC, a plurality of desired channels from the digitized signal and outputting by the DFE, the selected plurality of desired channels to at least one demodulator as a digital datastream.

Ex. 2025 [NOA] 7

Zhang-Patent Was Also Considered By The Office In The Reexamination Of Related '362 Patent

ALL REFERENCES CONSIDERED EXCEPT WHERE LINED THROUGH. /A.M.L/

INFORMATION DISCLOSURE STATEMENT BY APPLICANT
(Not for submission under 37 CFR 1.99)

Application Number	90018255
Filing Date	2023-09-20
First Named Inventor	Madhukar Reddy
Art Unit	3992
Examiner Name	LIE, ANGELA M
Attorney Docket Number	189005.TR003

ALL REFERENCES CONSIDERED EXCEPT WHERE LINED THROUGH. /A.M.L/

	20	8374568	B2	2013-02-12	KISHORE SEENDRIPU et al.	
	21	8909187	B2	2014-12-09	KISHORE SEENDRIPU et al.	
	22	8285240	B2	2012-10-09	KISHORE SEENDRIPU et al.	
	23	7027520	B2	2006-04-11	MICHAEL ANTHONY PUGEL	
	24	8526898	B2	2013-09-03	MADHUKAR REDDY et al.	
	25	8902369	B2	2014-12-02	MICHAEL ANTHONY PUGEL	
	26	8374570	B2	2013-02-12	KISHORE SEENDRIPU et al.	
	27	8666350	B2	2014-03-04	ARI VAUHKONEN	
	28	6704372	B2	2004-03-09	WEIMIN ZHANG et al.	
	29	7394871	B2	2008-07-01	WEIMIN ZHANG et al.	
	30	7095454	B2	2006-08-22	MATTHEW GLENN WAIGHT et al.	

28	6704372	B2	2004-03-09	WEIMIN ZHANG et al.

EFS Web 2.1.18

Entropic Communications, LLC, Exhibit 2028
Page - 3
IPR2025-00180, Comcast Corporation v. Entropic Communications, LLC

Examiner In Reexamination Found That Zhang Fails To Disclose A Similar Limitation Of The '362 Patent

NOTICE OF ALLOWANCE

Regarding claims 1 and 11, the cited prior art of record fails to teach the system and method as disclosed in claims 1 and 11, comprising a mixer module configured to downconvert a plurality of frequencies that comprises a plurality of desired television channels and a plurality of undesired television channels and analog-to-digital converter digitizing plurality of frequencies comprising the plurality of desired and undesired channels (thus multiple channels are inputted to the mixer and outputted) and a digital circuit (interpreted as element 230 in Figure 2 and also described in column 5, lines 49-60) to select plurality of desired television channels from the digitized plurality of frequencies and output the selected plurality of television channels to a demodulator as a digital stream.

Ex. 1082 [NOA] 6

’275: ”Select” Desired Channels “From The Digitized Signal” And Output “The Selected” Channels To Demodulator(s)

US 11,785,275

1. A method for operating a television receiver, comprising:

[1b] receiving, by an input terminal, an input signal comprising broadcast channels, the broadcast channels comprising a plurality of desired channels and a plurality of undesired channels, wherein the plurality of desired channels are non-contiguous;

processing, by a radio front end coupled to the input terminal, the input signal to generate a processed input signal;

[1d] digitizing, by an analog-to-digital converter (ADC) coupled to the radio front end, the processed input signal to generate a digitized signal;

[1e] selecting, by a digital frontend (DFE) coupled to the ADC, the plurality of desired channels from the digitized signal; and

[1f] outputting, by the DFE, the selected plurality of desired channels to at least one demodulator as a digital datastream, wherein the demodulator extracts information encoded in the digital datastream.

’275: Digitized Signal With Plurality Of Broadcast Channels Comprising Desired And Undesired Channels

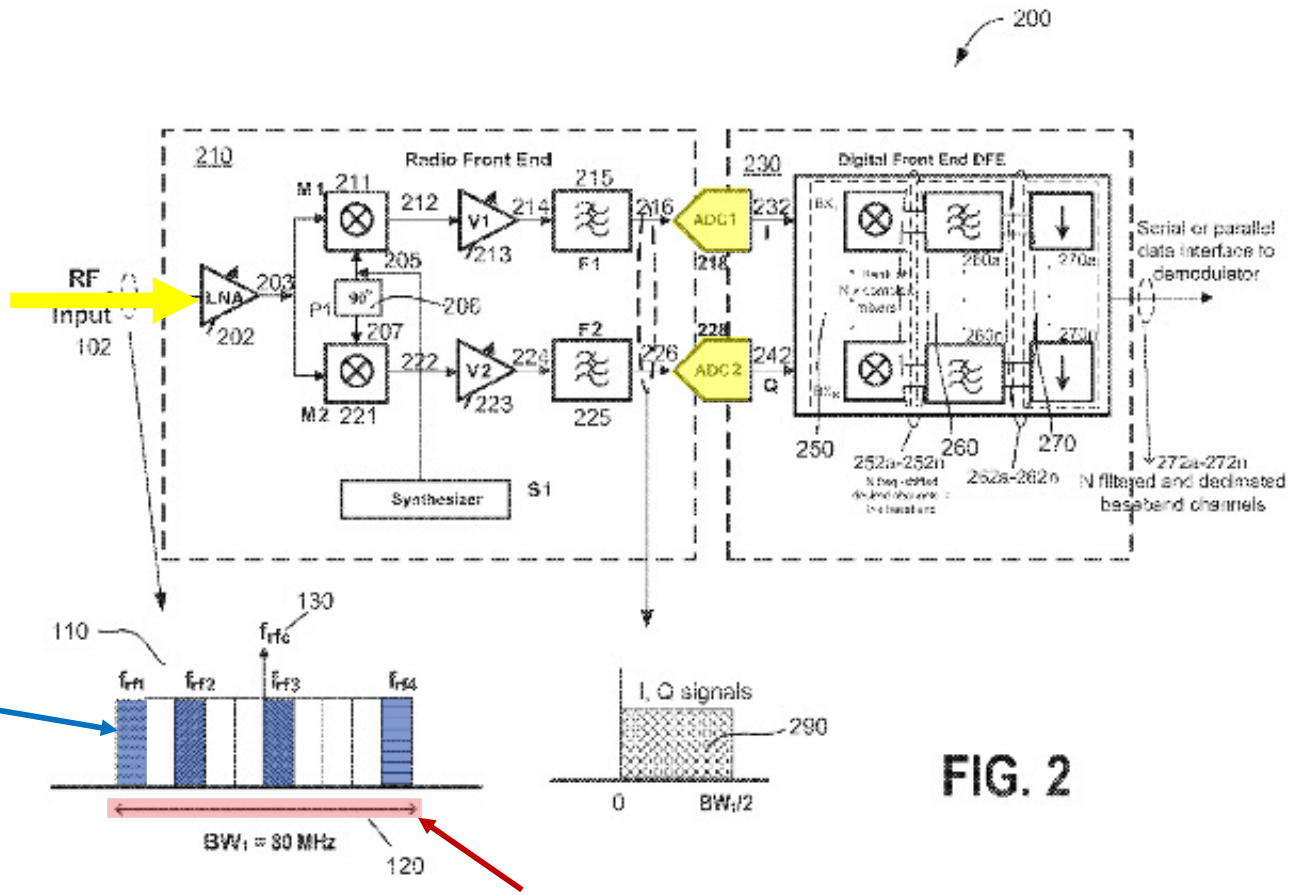

FIG. 2

Four desired channels

Ten total channels, both desired and undesired

Ex. 1001 [’275] 4:47-64

’275: Select Desired Channels From The Digitized Signal

N mixers extract N desired channels from the digitized signal without extracting undesired channels

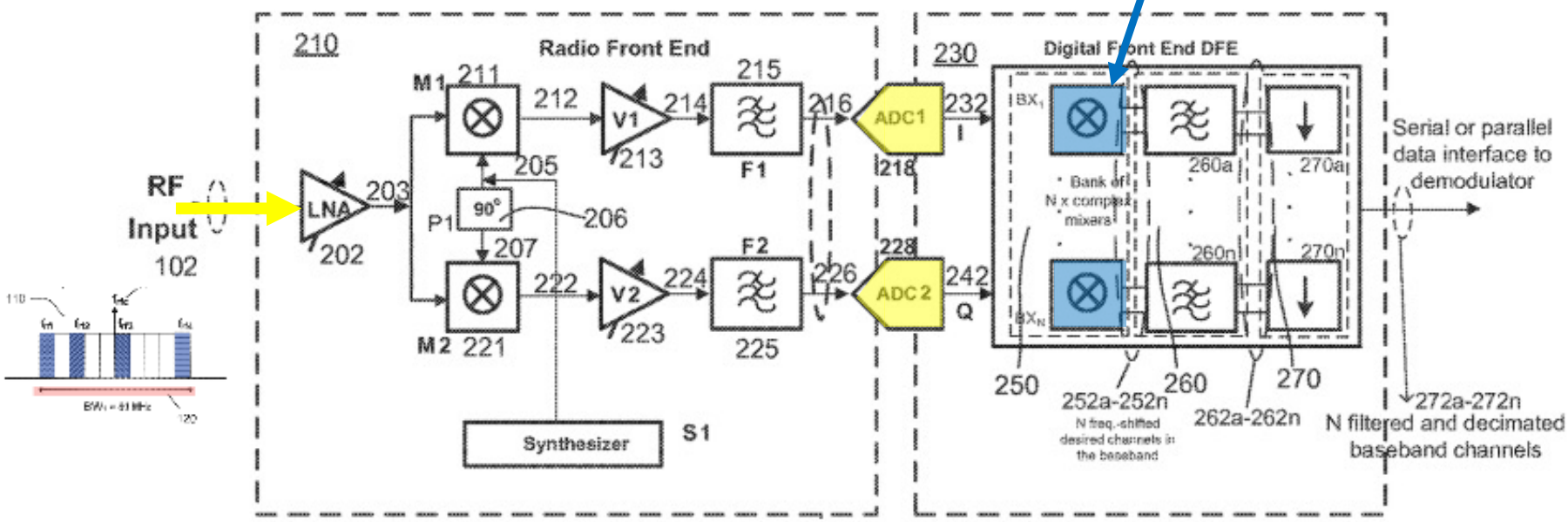

’275: The Selected Desired Channels Are Transmitted To Demodulators

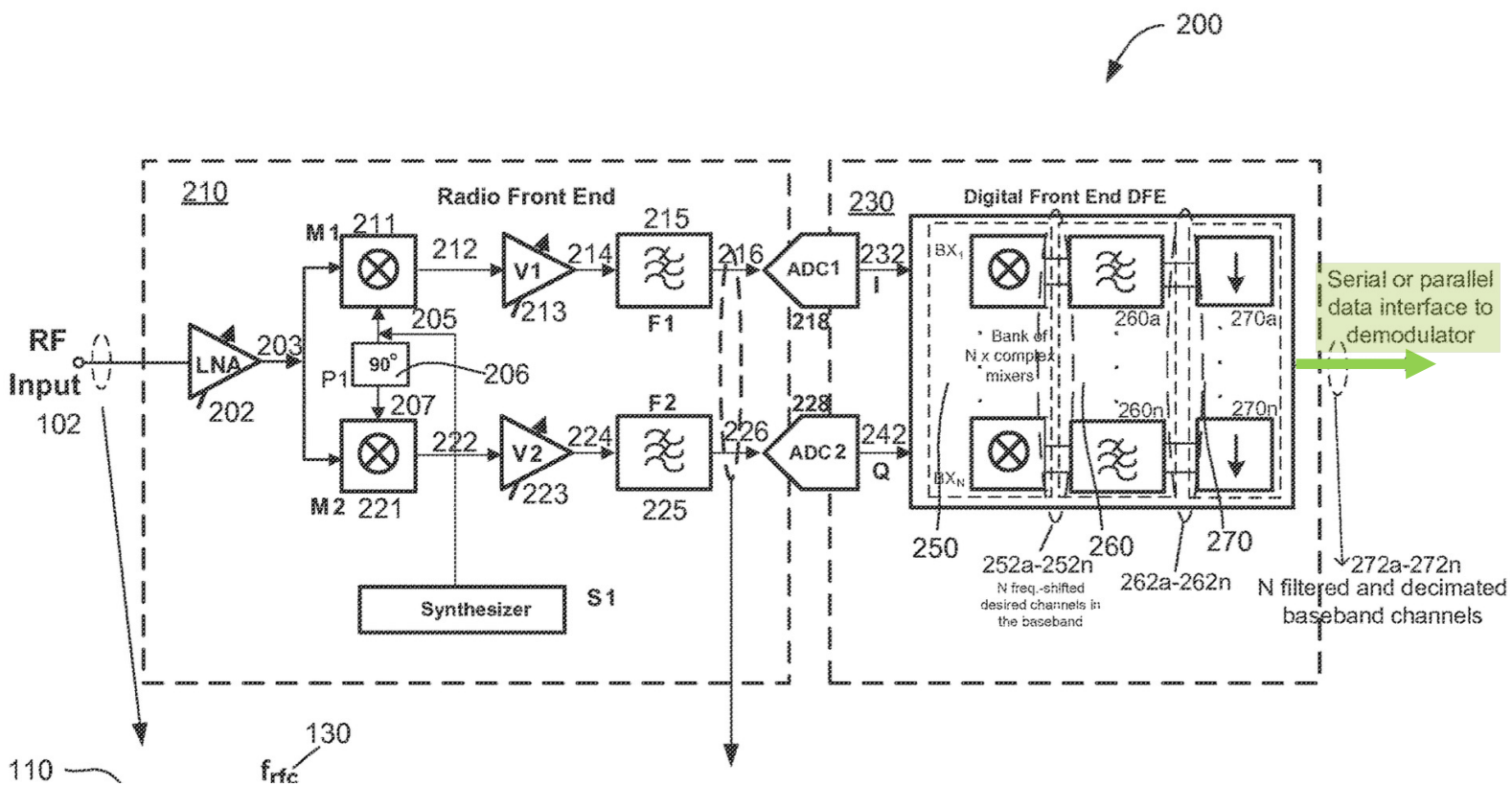

Patent Owner's Position: Zhang Extracts All Channels C_1-C_n From The Input Signal Without Any Selection

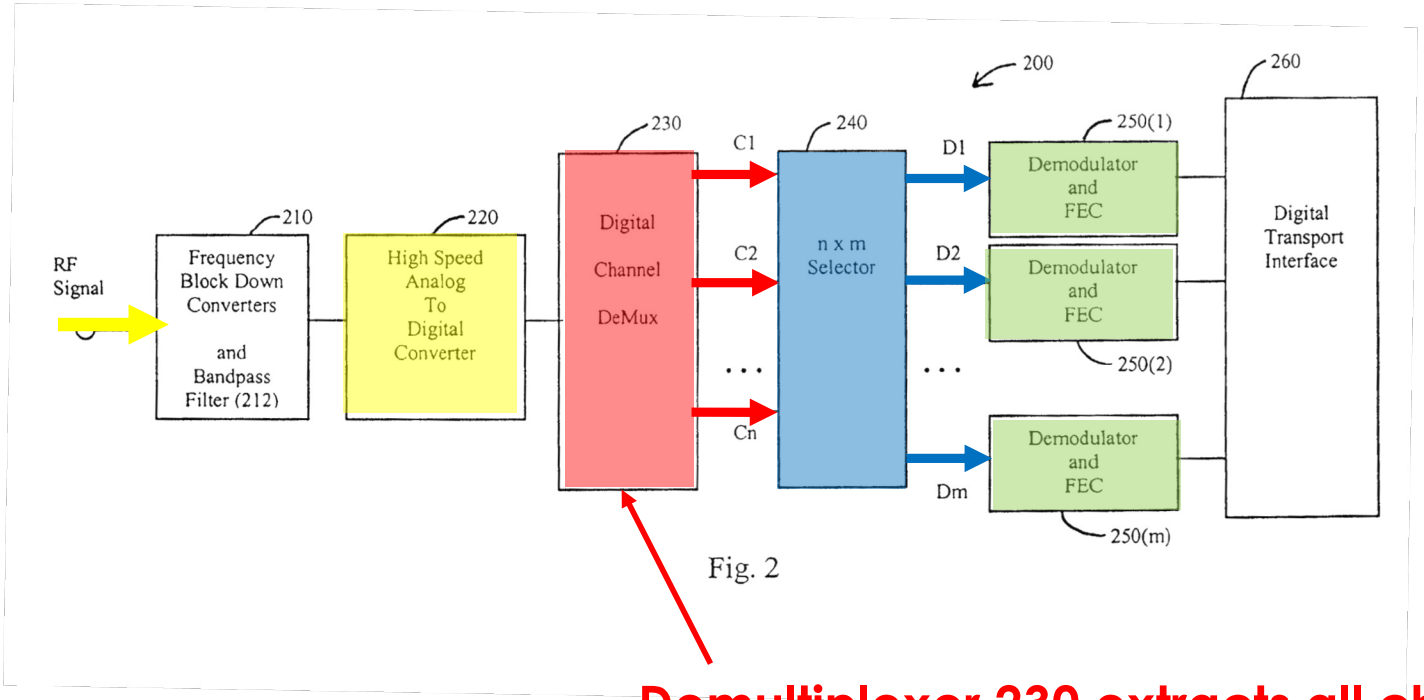

Fig. 2

Demultiplexer 230 extracts <u>all</u> channels C_1-C_n, both desired and undesired, in the entire signal band, <u>without selection</u>

Patent Owner's Position: Zhang Selector 240 Selects Desired Channels D_1-D_m From Channels C_1-C_n, Not From Digitized Signal

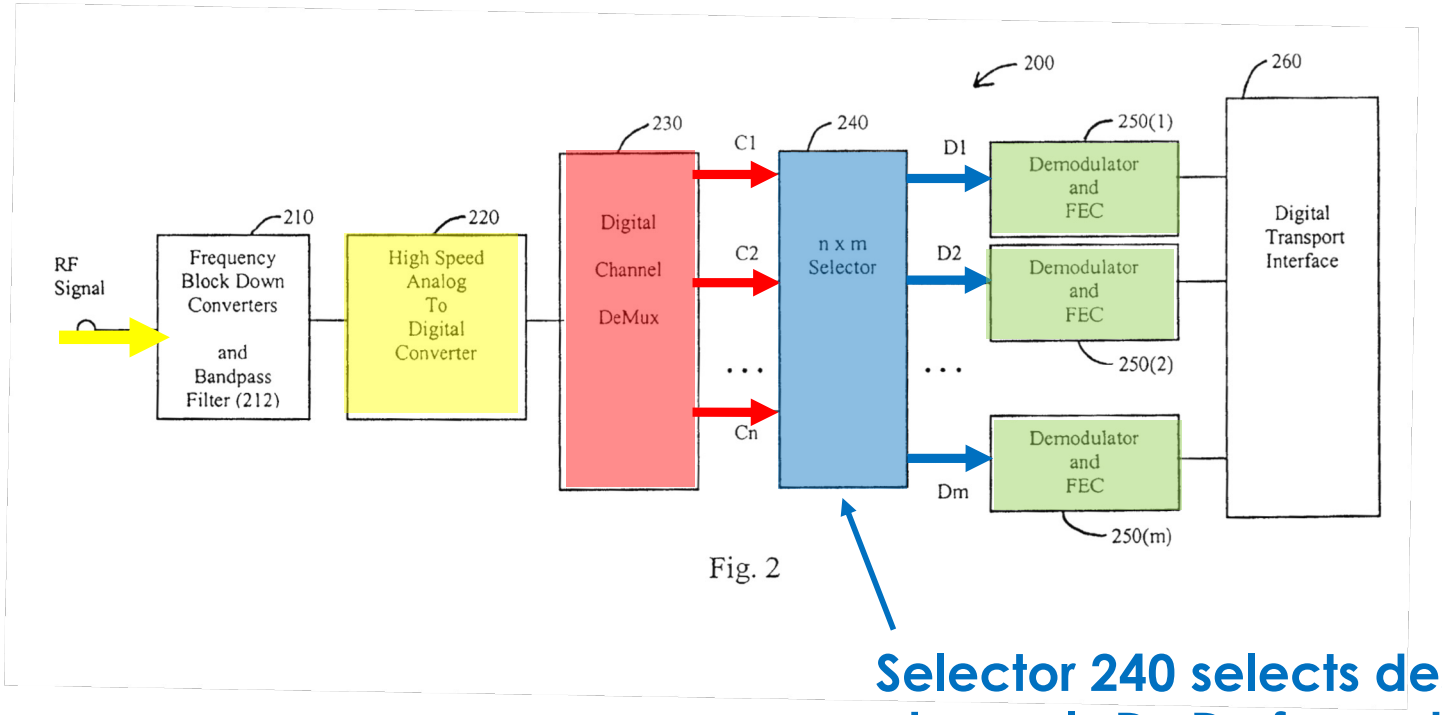

Fig. 2

Selector 240 selects desired channels D_1-D_m from channels C_1-C_n and sends them to demodulators

’275 And Zhang Utilize Different Methods After Generating The Digitized Signal

’275 Patent:

Select And Extract Desired Channels From The Digitized Signal

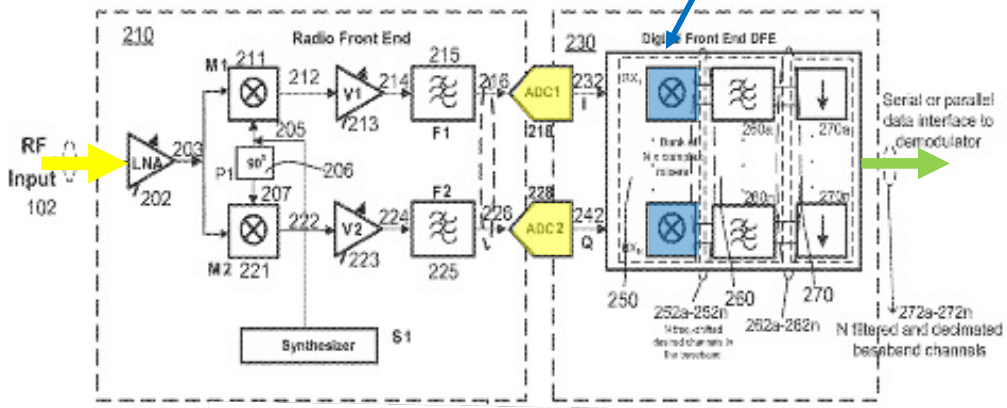

Zhang:

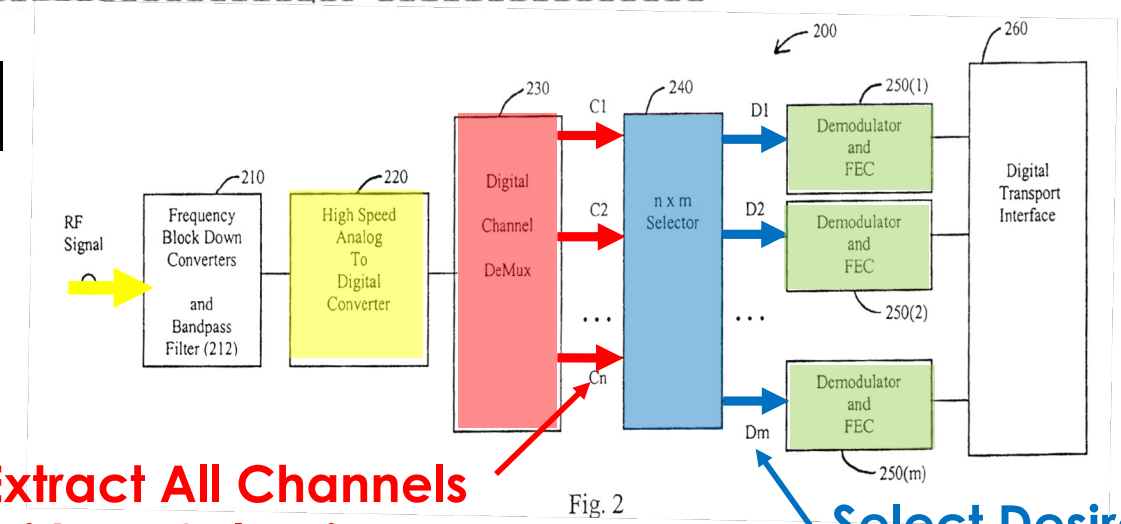

Extract All Channels Without Selection

Select Desired Channels From The Already Channelized C_1-C_n

Petitioner Relies In The Alternative On Zhang Channels (i) C_1-C_n And (ii) D_1-D_m As The Claimed "Desired Channels"

'275 Claim 1:

[1d] digitizing, by an analog-to-digital converter (ADC) coupled to the radio front end, the processed input signal to generate a digitized signal;

[1e] selecting, by a digital frontend (DFE) coupled to the ADC, the plurality of desired channels from the digitized signal; and

[1f] outputting, by the DFE, the selected plurality of desired channels to at least one demodulator as a digital datastream, wherein the demodulator extracts information encoded in the digital datastream.

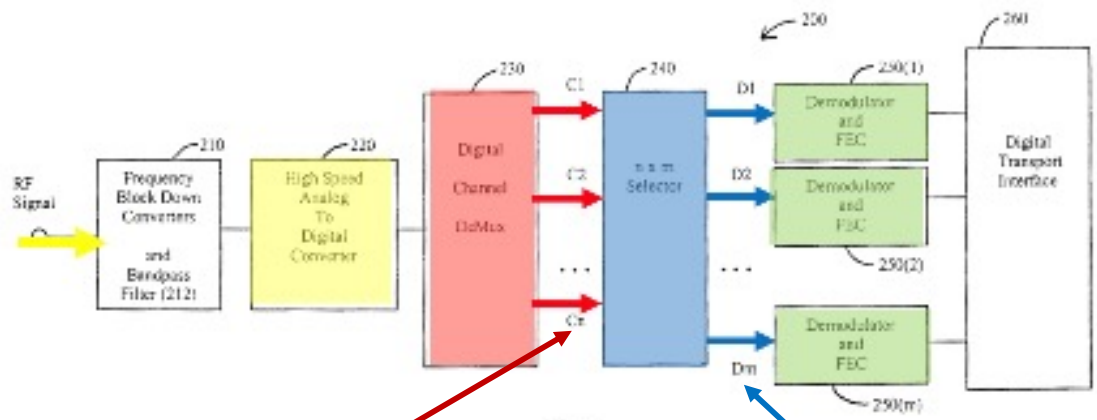

Fig. 2

Petitioner's Alternative 1 For Desired Channels: C_1-C_n

Petitioner's Alternative 2 For Desired Channels: D_1-D_m

Zhang Channels C_1-C_n Do Not Disclose "Desired Channels" Even If They Were Less Than All Channels In The Signal Band

'275 Claim 1:

[1d] digitizing, by an analog-to-digital converter (ADC) coupled to the radio front end, the processed input signal to generate a digitized signal;

[1e] selecting, by a digital frontend (DFE) coupled to the ADC, the plurality of desired channels from the digitized signal; and

[1f] outputting, by the DFE, the selected plurality of desired channels to at least one demodulator as a digital datastream, wherein the demodulator extracts information encoded in the digital datastream.

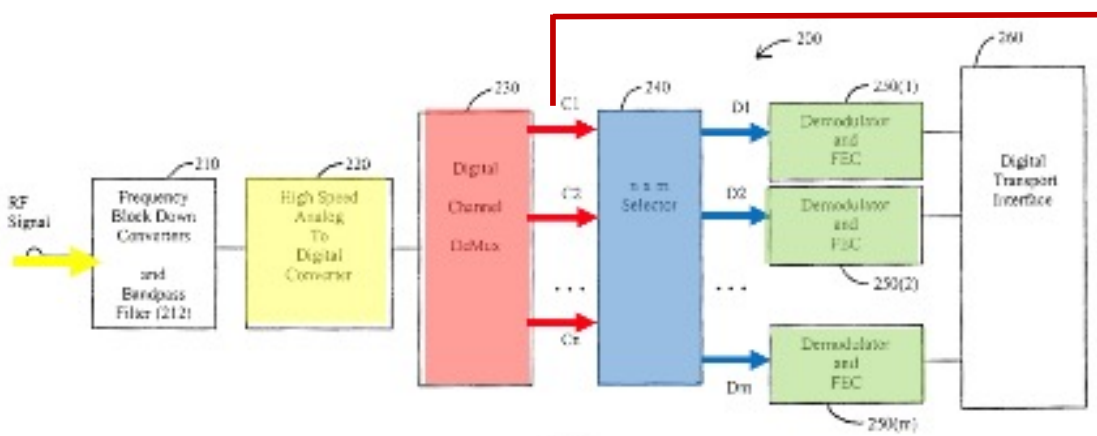

Fig. 2

Channels C_1-C_n:

i. not output to demodulator(s) [1f]

ii. not "selected" [1e]

The Same "Plurality Of Desired Channels" Must Be "Selected" In [1e] And "Output" To Demodulator(s) In 1[f]

'275 Claim 1:

[1d] digitizing, by an analog-to-digital converter (ADC) coupled to the radio front end, the processed input signal to generate a digitized signal;

[1e] selecting, by a digital frontend (DFE) coupled to the ADC, the plurality of desired channels from the digitized signal; and

[1f] outputting, by the DFE, the selected plurality of desired channels to at least one demodulator as a digital datastream, wherein the demodulator extracts information encoded in the digital datastream.

The Same "Plurality Of Desired Channels" Must Meet Limitations 1[e] And 1[f]

- ***Univ. of Mass. v. L'Oréal S.A.***, 36 F.4th 1374, 1380 (Fed. Cir. 2022) (the term ***"the" "is the language for invoking an antecedent—for repeating, not departing from, the claim's prior reference*** to [the initial antecedent phrase]");

- ***Eaton Corp. v. Rockwell Int'l Corp.***, 323 F.3d 1332, 1339 (Fed. Cir. 2003) ("***By stating*** that the retaining step is performed 'during ***the*** gear shift ratio,' ***the claim requires this step to be performed during the particular sequence*** defined by the preamble as the gear ratio shift.")

Zhang Channels C_1-C_n Are Not "The Plurality Of" Channels Output To Demodulators

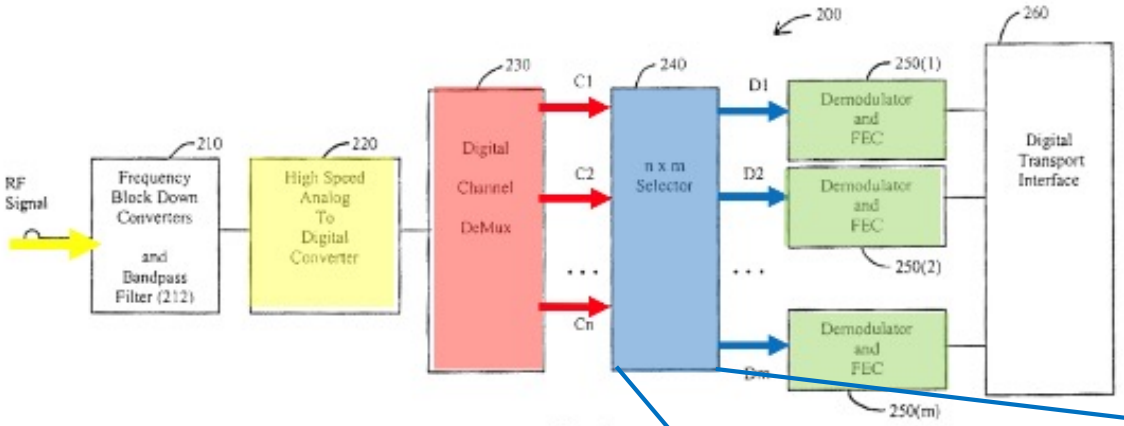

Fig. 2

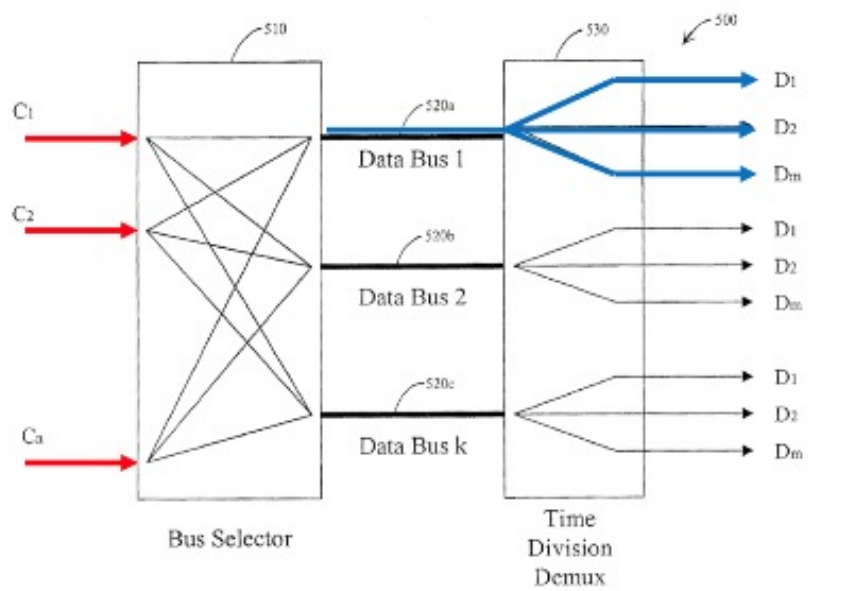

Fig. 5

Channels C_1-C_n Are A Different "Plurality Of Channels" Than Channels D_1-D_m

Weimin Zhang

[0028] 2 and 3). Still referring to **FIG. 2**, an n×m digital selector **240** receives the demultiplexed digital RF channels C_1 to C_n and then selects one or more of the RF channels D_1 to D_m from one or more of the digital RF channels C_1 to C_n.

[0029] The m selected RF channels are then fed into respective demodulators **250(1)**, **250(2)**, . . . **250**(m). The

[0039] In operation, digital selector **500** digitally selects one or more RF channels D_1 to D_m from the digital RF channels C_1 to C_n and then sends them to appropriate demodulators or output ports (not shown) through different data buses (not shown). Because a bus clock is much faster

Petitioner's Reply: C_1-C_n Are The Same Plurality Of Channels As D_1-D_m

PETITIONER'S REPLY

PO superficially treats D_1-D_m as being different from C_1-C_n, but they are not. Ex. 1089, 197:15-23. Channels D_1-D_m are channels C_1-C_n and only relabeled as they pass through the selector 240 to reflect the different ways they are transferred to demodulators 250. Ex. 1090, 26. Regardless of how they are transferred (e.g., databuses used), C_1-C_n are output to the demodulators. Ex. 1085, ¶37.

Reply, 26

Zhang: Channels D_1-D_m Are By Design A Subset Of Channels C_1-C_n

Weimin Zhang

[0028] 2 and 3). Still referring to **FIG. 2**, an n×m digital selector **240** receives the demultiplexed digital RF channels C_1 to C_n and then selects one or more of the RF channels D_1 to D_m from one or more of the digital RF channels C_1 to C_n. RF channels C_1 to C_n contain content channels that are selected or used by a subscriber. Channel-search capabilities of the digital selector **240** renders it much faster than traditional analog channel switching through RF tuners. This is because only the selected channels are later demodulated unlike the systems using RF tuners which demodulate all of the RF channels. Embodiments of the present invention are

[0039] In operation, digital selector **500** digitally selects one or more RF channels D_1 to D_m from the digital RF channels C_1 to C_n and then sends them to appropriate demodulators or output ports (not shown) through different data buses (not shown). Because a bus clock is much faster

Petitioner's Reply: If It Happens That All Channels C_1-C_n Are Subsequently Selected By Selector 240, Then C_1-C_n = D_1-D_m

PETITIONER'S REPLY

all of C_1-C_n are clearly output as D_1-D_m when m=n

Reply, 26

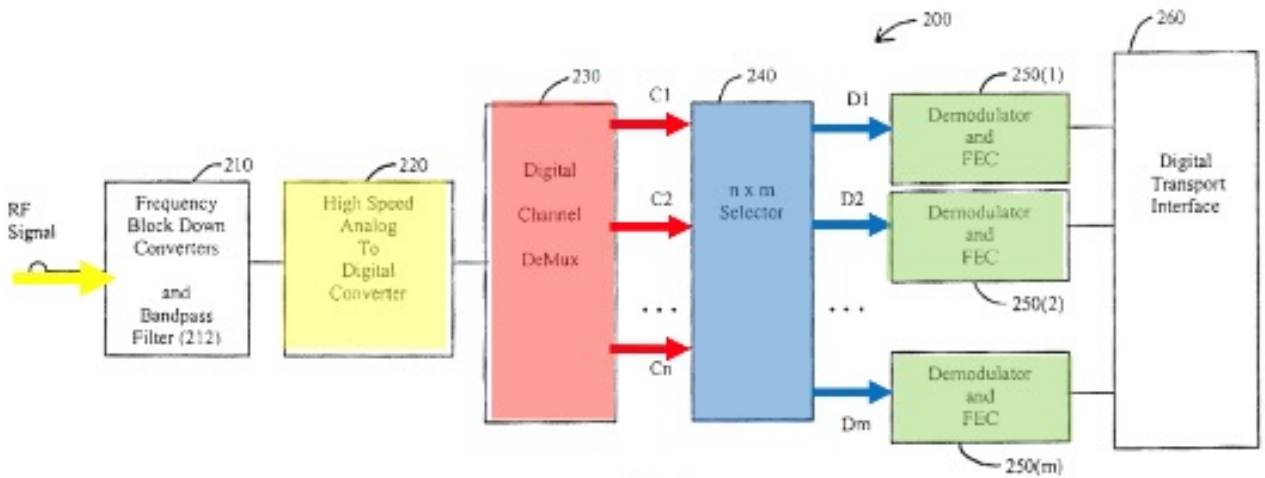

Fig. 2

Theoretical Happenstance That All Channels C_1-C_n May Be Subsequently Selected Does Not Disclose The Claims

- ***In re Facebook, Inc.***, 743 Fed Appx. 998, 1001-1002 (Fed Cir. 2018) (reversing the Board's anticipation and obviousness determination because even if the examples in the prior art "***happened to result in***" the claimed limitation, ***"[n]othing about [the prior art's] algorithm required***" that outcome);

- ***In re Felton***, 484 F.2d 495, 500 (CCPA 1973) (reversing anticipation and obviousness determinations where "***it would be mere happenstance if any structure made according to [the prior art] met the limitations of the claims***.")

Petitioner's Reply That C_1-C_n = D_1-D_m Is An Expressly Disclosed Embodiment Is False And Does Not Logically Follow

PETITIONER'S REPLY

'n,' 'm' is a variable representing 1 or more. Zhang places no limit on 'm,' except that it would not be greater than 'n.' Zhang does not require 'm' to be less than 'n.' Thus, m=n is not "theoretical happenstance" (as PO argues), but rather one of the expressly disclosed embodiments in Zhang. *Id.* Using variables 'm' and 'n' is

Reply, 27

[No Limit On 'n' And 'm'] ≠ [n = m is "expressly" disclosed]

Channels D_1-D_m Are By Design A Subset Of Channels C_1-C_n

Weimin Zhang

[0028] 2 and 3). Still referring to **FIG. 2**, an n×m digital selector **240** receives the demultiplexed digital RF channels C_1 to C_n and then selects one or more of the RF channels D_1 to D_m from one or more of the digital RF channels C_1 to C_n. RF channels C_1 to C_n contain content channels that are selected or used by a subscriber. Channel-search capabilities of the digital selector **240** renders it much faster than traditional analog channel switching through RF tuners. This is because only the selected channels are later demodulated unlike the systems using RF tuners which demodulate all of the RF channels. Embodiments of the present invention are

[0039] In operation, digital selector **500** digitally selects one or more RF channels D_1 to D_m from the digital RF channels C_1 to C_n and then sends them to appropriate demodulators or output ports (not shown) through different data buses (not shown). Because a bus clock is much faster

Reply: "Eventually" All Channels C_1-C_n Will Be Sent To Demodulators As Different Users Select Different Channels Over Time

PETITIONER'S REPLY

to demodulators. Specifically, all of C_1-C_n are clearly output as D_1-D_m when m=n and they are also all eventually output when m<n. Ex. 1085, ¶36.

Reply, 26

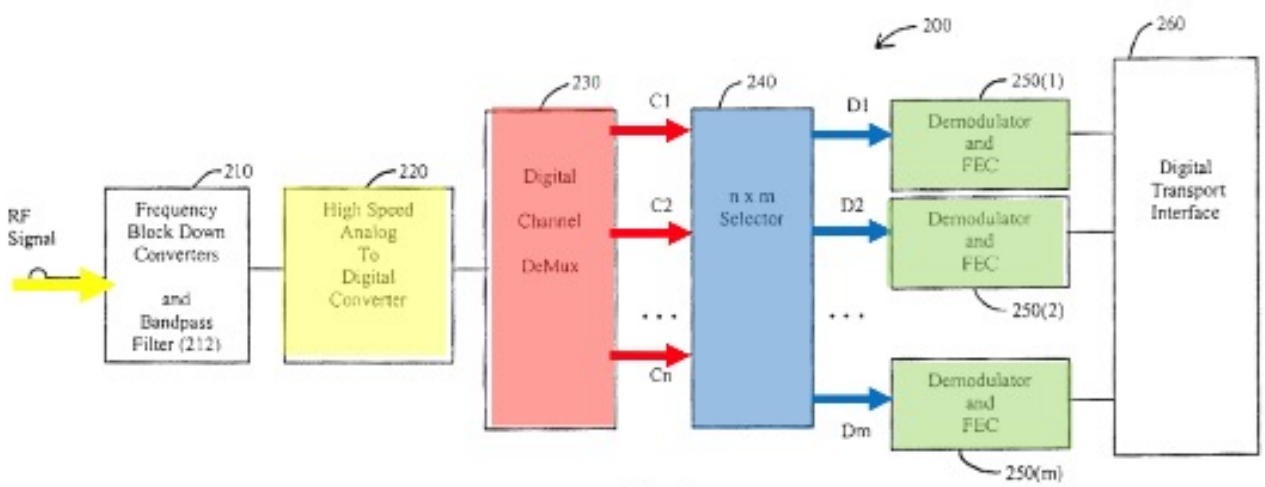

Fig. 2

That All C_1-C_n May Over Extended Periods Be "Eventually" Sent To Demodulators Does Not Disclose The Claimed "Method Of Operating"

US 11,785,275

1. A method for operating a television receiver, comprising:

receiving, by an input terminal, an input signal comprising broadcast channels, the broadcast channels comprising a plurality of desired channels and a plurality of undesired channels, wherein the plurality of desired channels are non-contiguous;

processing, by a radio front end coupled to the input terminal, the input signal to generate a processed input signal;

digitizing, by an analog-to-digital converter (ADC) coupled to the radio front end, the processed input signal to generate a digitized signal;

selecting, by a digital frontend (DFE) coupled to the ADC, the plurality of desired channels from the digitized signal; and

outputting, by the DFE, the selected plurality of desired channels to at least one demodulator as a digital datastream, wherein the demodulator extracts information encoded in the digital datastream.

Zhang Channels C_1-C_n Are Neither "Desired" Nor "Selected" Channels

'275 Claim 1:

[1d] digitizing, by an analog-to-digital converter (ADC) coupled to the radio front end, the processed input signal to generate a digitized signal;

[1e] selecting, by a digital frontend (DFE) coupled to the ADC, the plurality of desired channels from the digitized signal; and

[1f] outputting, by the DFE, the selected plurality of desired channels to at least one demodulator as a digital datastream, wherein the demodulator extracts information encoded in the digital datastream.

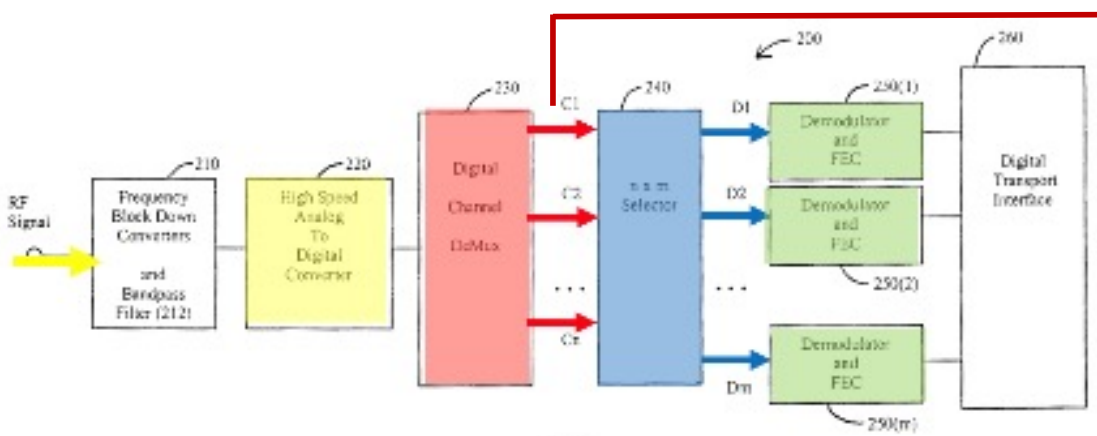

Fig. 2

Channels C_1-C_n:

i. **not output to demodulator(s) [1f]**

ii. **not "selected" [1e]**

Zhang Channels C_1-C_n Are Neither "Selected" Nor "Desired Channels"

All Channels C_1-C_n "In The Entire Signal Band" Indiscriminately Extracted Without Any Selection

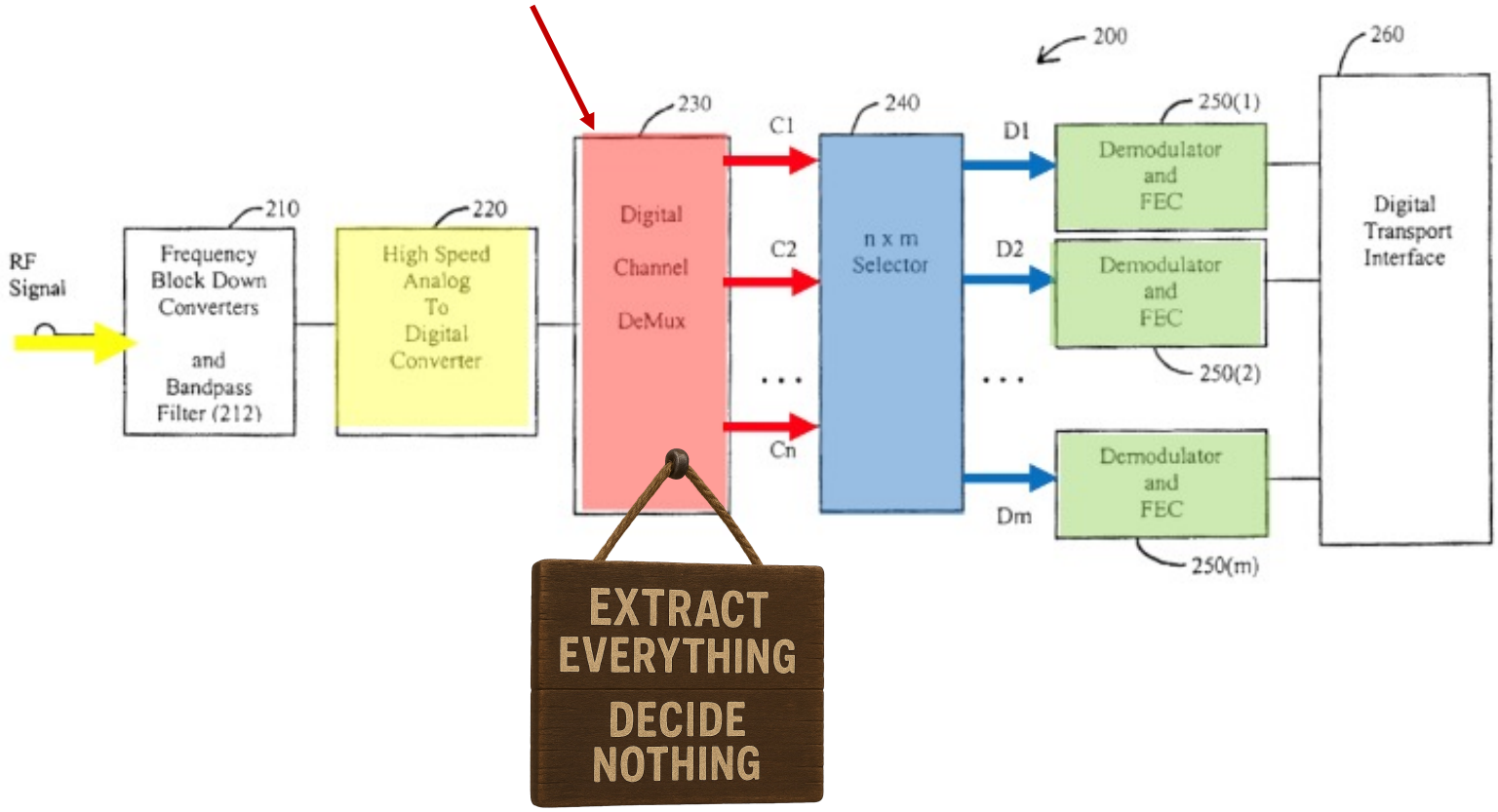

Zhang's Failure To Disclose The "Select" Limitation Is Similar To The Deficiency Found By Examiner During Prosecution

NOTICE OF ALLOWANCE

The following is a statement of reasons for the indication of allowable subject matter: the prior art made of record teach a receiver for a wireless telecommunication system teach all of the adjacent frequency bands in the IF signal passed by a band pass filter in the radio frontend are converted to a digital signal by an ADC and then separated into their respective frequency bands by a channelizer where the separated frequency bands are processed in the normal manner by subsequent DSP devices, see Claxton et al. US 6,735,421. The prior art made of record do not teach selecting, by a digital frontend (DFE) coupled to the ADC, a plurality of desired channels from the digitized signal and outputting by the DFE, the selected plurality of desired channels to at least one demodulator as a digital datastream.

Ex. 2025 [NOA] 7

Zhang's Only Numerical Embodiment (FIG. 6) Confirms That Channels C_1-C_n Are All The Channels In The Input Signal

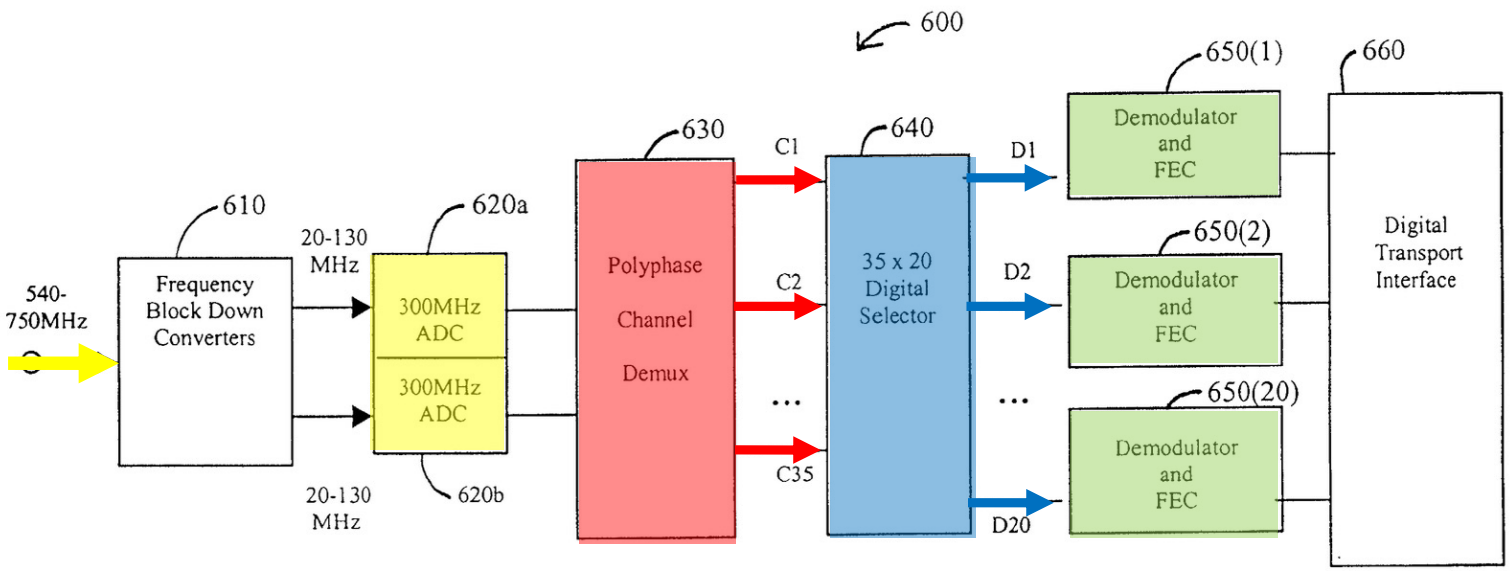

Fig. 6

Zhang's Only Numerical Embodiment (FIG. 6) Confirms That Channels C_1-C_n Are All The Channels In The Input Signal

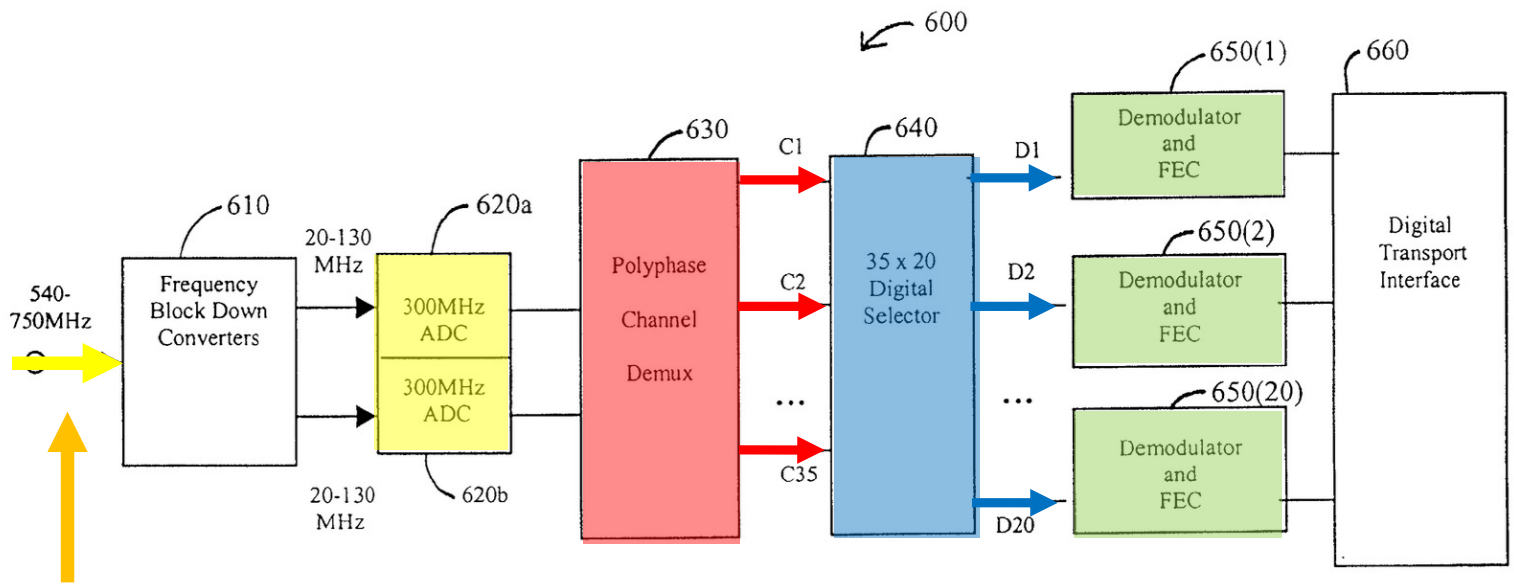

Fig. 6

750 – 540 = 210 MHz

system. Accordingly, the multi-channel analog RF signal is shown to be between 540-750 MHz. In other embodiments,

Ex. 1013 [Zhang] [0041]

Zhang's Only Numerical Embodiment (FIG. 6) Confirms That Channels C_1-C_n Are All The Channels In The Input Signal

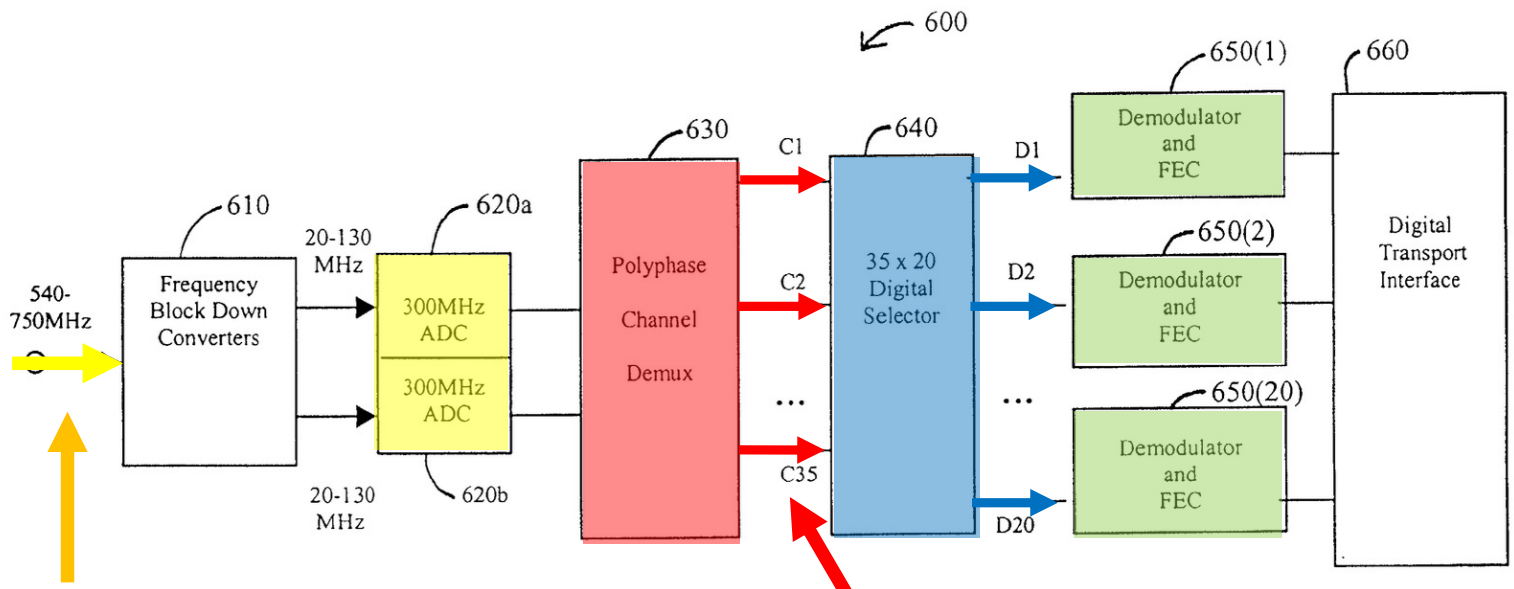

Fig. 6

750 – 540 = 210 MHz

35 Channels C, 6 MHz Spacing

single multi-channel RF signal can have multiple separate RF signals, e.g., 35 RF channels C_1 to C_{35} per multi-channel

Ex. 1013 [Zhang] [0042]

may be spaced at 6 MHz intervals.

Ex. 1013 [Zhang] [0006]

Zhang's Only Numerical Embodiment (FIG. 6) Confirms That Channels C_1-C_n Are All The Channels In The Input Signal

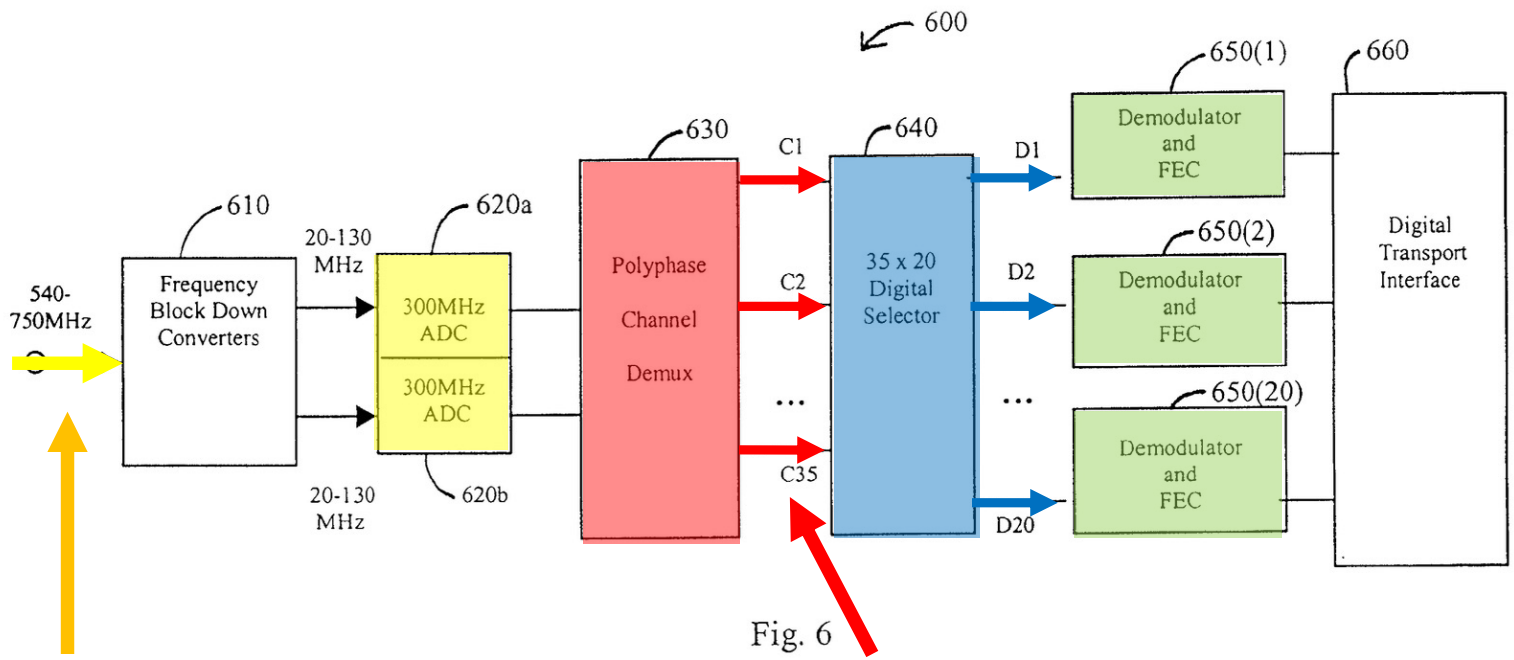

Fig. 6

750 – 540 = 210 MHz = **35 X 6 MHz**

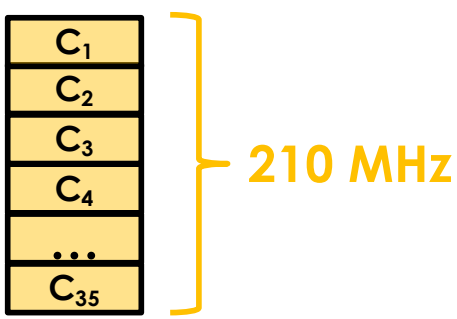

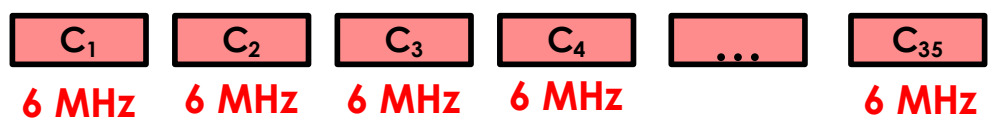

Undisputed: Zhang Fig. 6 Extracts All Channels C_1-C_n In The Entire Signal Band

DEPOSITION OF DAVID B. LETT

So in Zhang Figure 6, demultiplexer that demultiplexes Channels C1 through C35 has demultiplexed all the channels -- all the RF channels in the input signal; correct?

A. In this specific example, yes.

Q. And in Zhang's Figure 6, the output of the demultiplexer 630 are Channels C1 through C35; correct?

A. That's right.

Q. And each of those channels occupy the same frequency of 0 to 6 megahertz; correct?

A. That's right.

Ex. 2022 [Lett-Depo.] 44:13-17

Zhang Fig. 6 Embodiment Operates "Similarly" To Fig. 2 Embodiment Relied Upon By Petitioner

Weimin Zhang

[0041] **FIG. 6** is a simplified high-level block diagram of an exemplary multi-channel demodulator **600** according to another embodiment of the present invention. Demodulator **600** is operates similarly to demodulator **200** of **FIG. 2**. In

Zhang Fig. 6 Embodiment Operates "Similarly" To Fig. 2 Embodiment Relied Upon By Petitioner

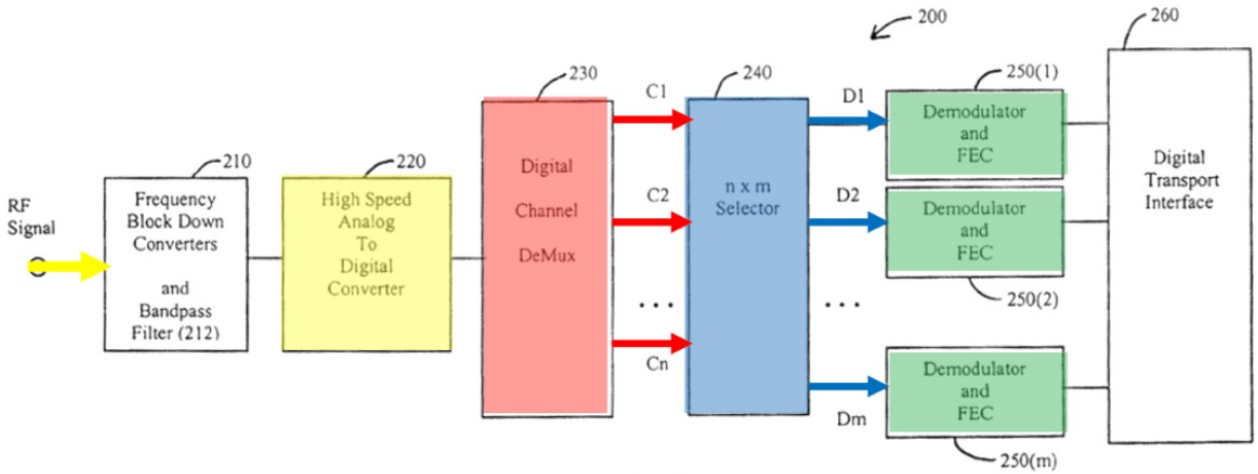

Fig. 2

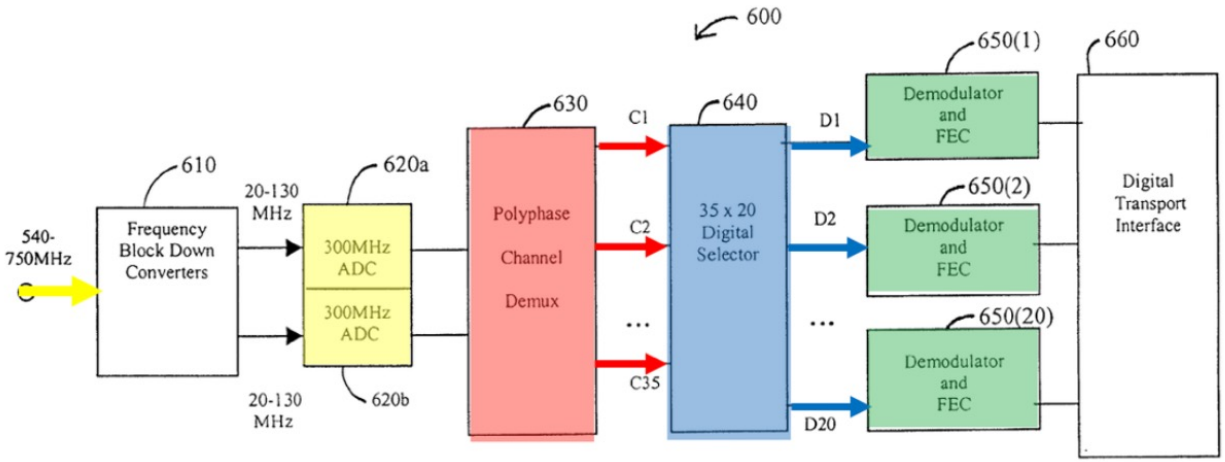

210 MHz = 35 channels x 6 MHz

Fig. 6

Zhang: Lower Case Letter "n" Is The Number Of Channels In "An Entire Signal Band"

Weimin Zhang

[0027] An ADC **220** then converts the down-converted multi-channel analog RF signal to a multi-channel digital RF signal. In this specific embodiment, ADC **220** is a high-speed ADC so that an entire signal band with n channels can be converted.

Ex. 1013 [Zhang] [0027]

The Only Place Zhang Defines "n"

Petitioner's Expert Agrees: "n" Refers To All Channels, Both Desired And Undesired, Within The Entire Signal Band

DEPOSITION OF DAVID B. LETT

14 Q So you agree that in paragraph 27 of
15 Zhang, in the sentence that says, "In this
16 specific embodiments" -- "embodiment, ADC 220 is a
17 high-speed ADC so an entire signal band with n
18 channels can be converted," end quote. So you
19 agree in this sentence, lower case letter n refers
20 to both desired and undesired channels within the
21 entire band; correct?
22 A It seems to, yes.

Ex. 2018 [Lett-1st-Depo.-Volume-I] 78:14-22

The Demultiplexer Of Fig. 2, Like Fig. 6, Merely "Separates" The Input Signal Into Its Constituent Channels C_1-C_n

[0028] A digital channel demultiplexer 230 then ***demultiplexes the multi-channel digital RF signal into separate digital RF channels C1 to Cn.*** …. Still referring to FIG. 2, an n×m digital ***selector 240 receives the demultiplexed digital RF channels C_1 to C_n and then selects one or more of the RF channels D_1 to D_m from one or more of the digital RF channels C_1 to C_n.***

RF channels C_1 to C_n contain content channels that are selected or used by a subscriber. Channel-search capabilities of the ***digital selector 240*** renders it much faster than traditional analog channel switching through RF tuners. ***This is because only the selected channels are later demodulated unlike the systems using RF tuners which demodulate all of the RF channels.***

"demultiplexes" input signal "into separate … channels" C_1-C_n. No selection

Zhang

ABSTRACT

signal to a multi-channel digital RF signal. A digital channel demultiplexer receives the multi-channel digital RF signal from the ADC and demultiplexes the multi-channel digital RF signal into separate digital RF channels.

Selector 240 Selects Desired Channels D_1-D_m From Separated Channels C_1-C_n

[0028] A digital channel demultiplexer 230 then ***demultiplexes the multi-channel digital RF signal into separate digital RF channels C1 to Cn.*** ….

Still referring to FIG. 2, an n×m digital ***selector 240 receives the demultiplexed digital RF channels C_1 to C_n and then selects one or more of the RF channels D_1 to D_m from one or more of the digital RF channels C_1 to C_n.***

RF channels C_1 to C_n contain content channels that are selected or used by a subscriber. Channel-search capabilities of the ***digital selector 240*** renders it much faster than traditional analog channel switching through RF tuners. ***This is because only the selected channels are later demodulated unlike the systems using RF tuners which demodulate all of the RF channels.***

"demultiplexes" input signal "into separate … channels" C_1-C_n. No selection

Selector 240 selects desired channels D_1-D_m from separated channels C_1-C_n

Each RF Channels C_1-C_n Contains Numerous Content Channels

[0028] A digital channel demultiplexer 230 then *demultiplexes the multi-channel digital RF signal into separate digital RF channels C1 to Cn.* ….

Still referring to FIG. 2, an n×m digital *selector 240 receives the demultiplexed digital RF channels C_1 to C_n and then selects one or more of the RF channels D_1 to D_m from one or more of the digital RF channels C_1 to C_n.*

RF channels C_1 to C_n contain content channels that are selected or used by a subscriber. Channel-search capabilities of the *digital selector 240* renders it much faster than traditional analog channel switching through RF tuners. *This is because only the selected channels are later demodulated unlike the systems using RF tuners which demodulate all of the RF channels.*

"demultiplexes" input signal "into separate … channels" C_1-C_n. No selection

Selector 240 selects desired channels D_1-D_m from separated channels C_1-C_n

RF Channels C_1-C_n Each Contain 18 Content Channels, Including Those Used By Subscribers

Zhang

A single separate RF channel can have multiple separate content signals, e.g., 18 content channels per RF channel.

Ex. 1013 [Zhang] [0041]

Because Of Selector 240, Zhang Is Unlike Systems That "Demodulate All Of The RF Channels"

[0028] A digital channel demultiplexer 230 then *demultiplexes the multi-channel digital RF signal into separate digital RF channels C1 to Cn.* ….

"demultiplexes" input signal "into separate … channels" C_1-C_n. No selection

Still referring to FIG. 2, an n×m digital *selector 240 receives the demultiplexed digital RF channels C_1 to C_n and then selects one or more of the RF channels D_1 to D_m from one or more of the digital RF channels C_1 to C_n.*

Selector 240 selects desired channels D_1-D_m from channels C_1-C_n

RF channels C_1 to C_n contain content channels that are selected or used by a subscriber. Channel-search capabilities of the *digital selector 240* renders it much faster than traditional analog channel switching through RF tuners. *This is because only the selected channels are later demodulated unlike the systems using RF tuners which demodulate all of the RF channels.*

RF Channels C_1-C_n Each Contain 18 Content Channels, Including Those Used By Subscribers

Because Of Selector 240 That Selects D_1- D_m, Zhang Is Unlike Systems That "Demodulate All of The RF Channels"

Zhang Prosecution Confirms Its Specification: Selector 240 Makes Zhang Different From Prior Art That Demodulated "All Of The RF Channels"

European Patent Application No. 02759732.7.2415

The provision of a selector allows the selection of specific RF channels for demodulation dependant on the specific application in which the apparatus is implemented (paragraph 37 of the application) this allows for power consumption to be optimised because only the selected channels are later demodulated unlike systems which demodulate all of the RF channels (e.g. D1 and D2). Thus, the invention provides apparatus which is not only faster, but also dissipates less heat, than systems such as those in D1 and D2, because fewer resources are required when demodulating only the selected RF channels (paragraph 25).

Ex. 2016 [Zhang-EPO-Reply] 2-3

Zhang

selected or used by a subscriber. Channel-search capabilities of the digital selector **240** renders it much faster than traditional analog channel switching through RF tuners. This is because only the selected channels are later demodulated unlike the systems using RF tuners which demodulate all of the RF channels. Embodiments of the present invention are

Ex. 1013 [Zhang] [0028]

Professor Russ: Zhang European Prosecution History Confirms That C_1-C_n Are All Channels In The Signal Band

DECLARATION OF SAMUEL H. RUSS, PH.D.

49. A POSITA reviewing the above would recognize that from Zhang's applicant's own perspective, the digital channel demultiplexer 230, like Zhang's prior art, demultiplexed both desired and undesired channels C_1-C_n without performing any selection, and it was Zhang's selector that, unlike Zhang's prior art, only transmitted desired channels D_1-D_m to demodulators.

Ex. 2013 [Russ-Decl.] ¶ 60

Reply Has No Substantive Response To Zhang European Prosecution Confirmation That C_1-C_n Are All RF Channels

Zhang European Prosecution: C_1-C_n Are "All Of The RF Channels"	Reply: Patent Owner Did Not Provide Copies Of Zhang's Prior Art
Zhang is "unlike [prior art] systems which demodulate ***all of the RF channels***" C_1-C_n. Ex. 2016 [Zhang-EPO-Reply] 2-3	"PO and Dr. Russ cite the prosecution history in Zhang's related EPO application (POR, 15-16) but ***do not provide the related EPO patent application or references***." Irrelevant Reply, 22

Petitioner's Expert Did Not Attempt To Review Any Zhang European Prosecution Documents He Complained Are Missing

DEPOSITION OF DAVID B. LETT

A. -- patents?

I don't think I looked at any other European patents or documents about European applications other than the ones that Dr. Russ referenced.

Q. Did you try to locate either the application or the references cited or anything else from the European prosecution of Zhang?

A. So I looked at this analysis from the view of a POSITA. And so the answer is no, I did not.

Ex. 2021 [Lett-Depo.] 112:5-14

By Design, Zhang Extracts All Channels C_1-C_n For Quick Selection Of Desired Channels From Already Extracted C_1-C_n

Zhang

selected or used by a subscriber. Channel-search capabilities of the digital selector **240** renders it much faster than traditional analog channel switching through RF tuners. This

Ex. 1013 [Zhang] [0028]

DEPOSITION OF DAVID B. LETT

4 being sent to the demodulators, but it's -- I don't
5 think it's wasted. It's really -- it's there for a
6 quick channel change to the new -- to the new desired
7 channel that may be going from an undesired to a desired
8 channel.

Ex. 2020 [Lett-1st-Depo-Volume-II] 8:4-8

Petitioner Reliance Upon Zhang's Reference To "Desired" Channels Misapprehends Zhang

PETITIONER'S REPLY

Any dispute as to whether channels C_1-C_n are the claimed "desired channels" should be resolved by Zhang referring to each target RF channel that becomes one of the C_1-C_n channels as either a "desired RF channel" or "desired channel," and referring to other channels filtered out by the demultiplexer as "undesired." Ex.

Reply, 15

Zhang Mentions "Desired Channel" In The Context Of Figure 3, Which Implements The Channel Demultiplexer 230

Zhang

[0030] **FIG. 3** is a simplified high-level schematic diagram of a digital tuner **300**, which in some embodiments of the present invention, can be used to implement digital channel demultiplexer **230** of **FIG. 2**. Digital tuner **300**

Ex. 1013 [Zhang] [0030]

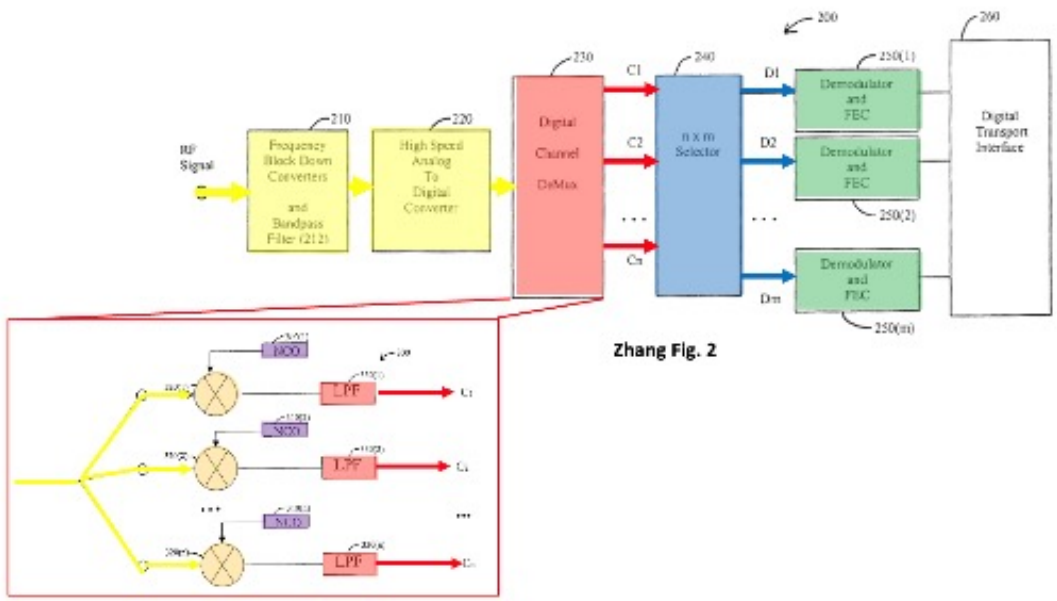

Zhang Fig. 2

Zhang Fig. 3

Zhang's Figure 3 Discloses Demultiplexer 230 With n Chains, Each Chain Tasked With Extracting One Of Channels C_1-C_n

Weimin Zhang

filters (LPFs) **330(1 . . . n)**. One chain of each of these elements is used for each RF channel. The exact number of

Ex. 1013 [Zhang] [0030]

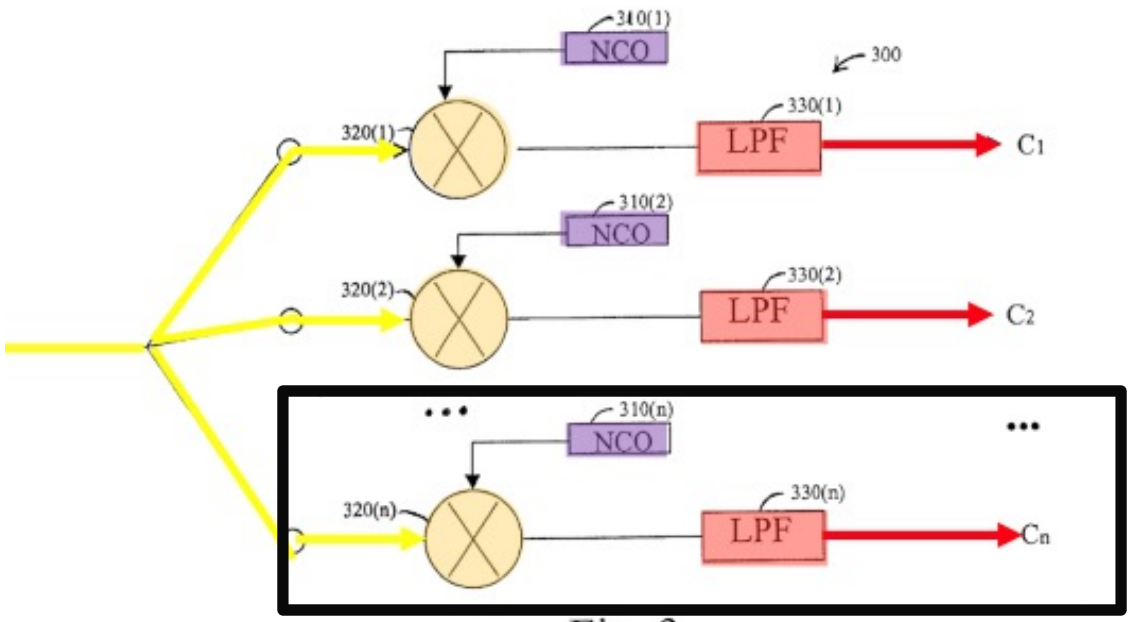

Fig. 3

One Of n Chains

Zhang's Fig. 3: Each Chain Has One Multiplier, One Numerically Controllable Oscillator (NCO), One Low Pass Filter (LPF)

Weimin Zhang

channel demultiplexer **230** of **FIG. 2**. Digital tuner **300** includes a bank of n numeric control oscillators (NCOs) **310(1 . . . n)**, complex multipliers **320(1 . . . n)**, and low-pass filters (LPFs) **330(1 . . . n)**. One chain of each of these

Ex. 1013 [Zhang] [0030]

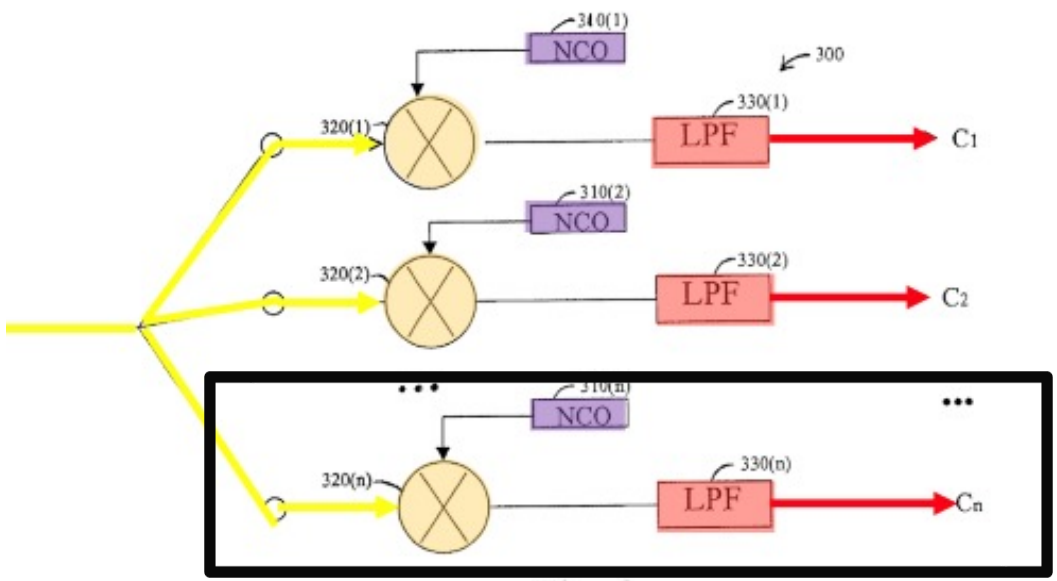

Fig. 3

One Of n Chains

Zhang Fig. 3: Each Chain Downconverts And Extracts One Of Channels C_1-C_n

2. Each Multiplier Downconverts To Baseband One Of Channels C_1-C_n Set By The NCO

1. Each NCO Sets The Frequency To The One Of C_1-C_n This Chain Is Responsible For Extracting

3. Each LPF Outputs Downconverted One Of C_1-C_n And Filters Out The Rest

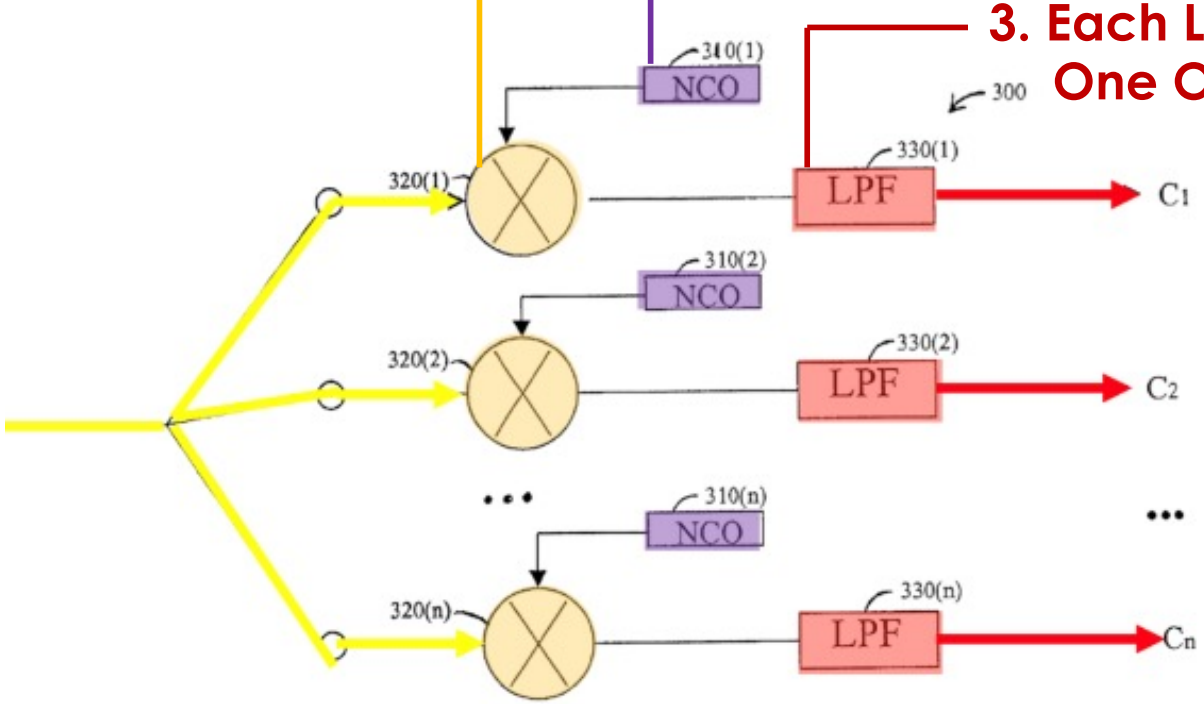

Fig. 3

From The Perspective Of Each Chain, Zhang Refers To "Desired Channel" And "Target Frequency"

"Target Frequency" Is The Frequency Of The One Of C_1-C_n This Chain Is Responsible For Extracting

"Desired Channel" Is The One Of C_1-C_n This Chain Is Responsible For Extracting; "Undesired Channels" Are The Rest

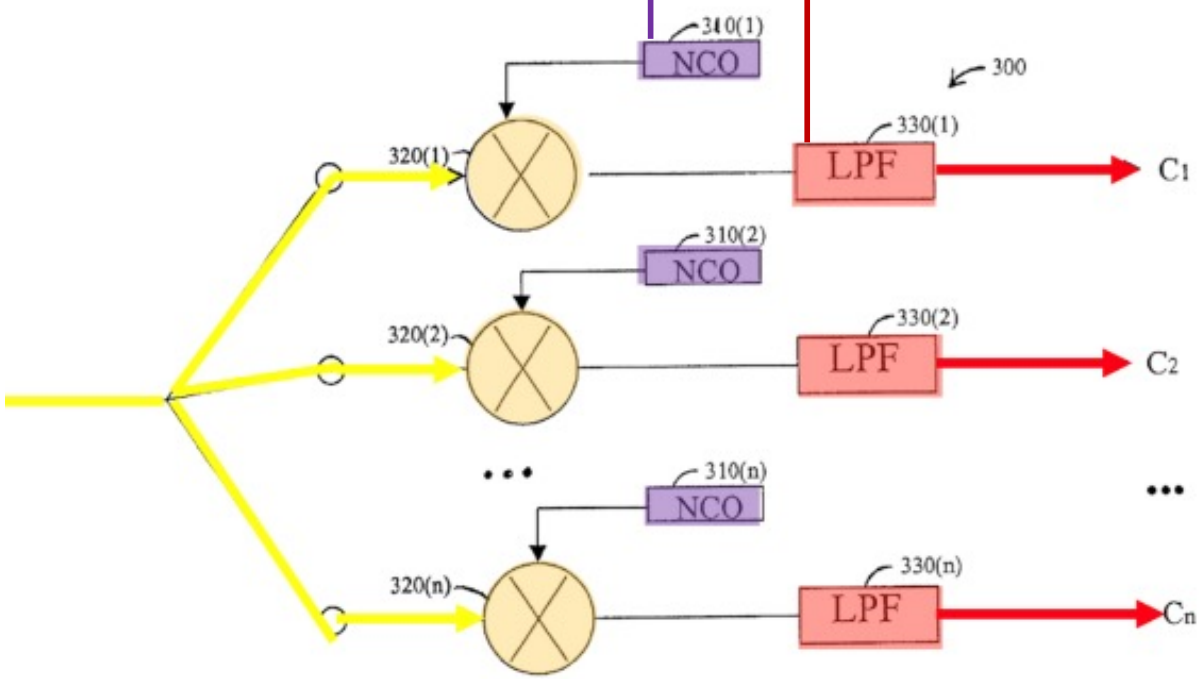

Fig. 3

C_1 In Isolation Is Called "Desired" From The Perspective Of Chain 1 Because C_1 Is The Channel Chain 1 Is Tasked With Extracting

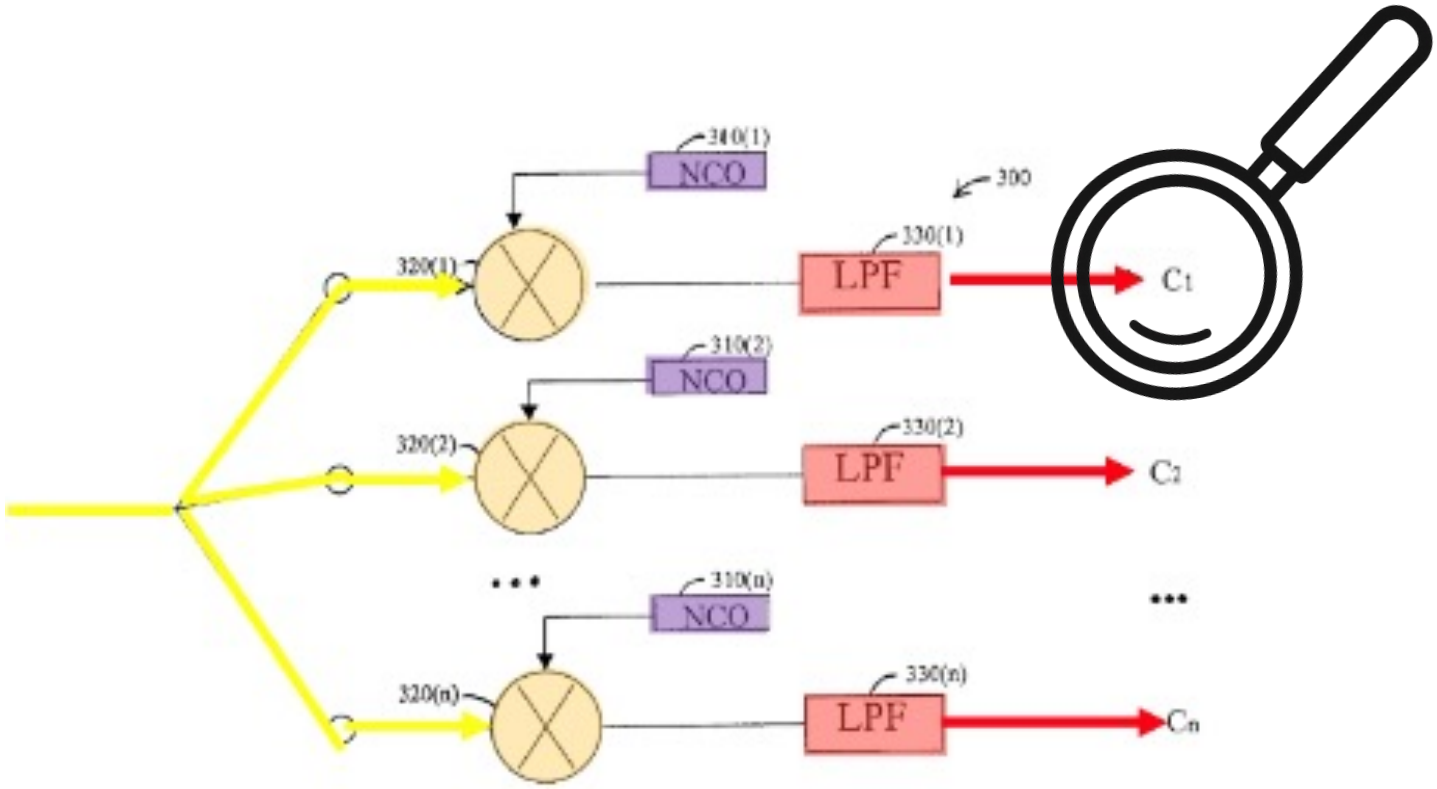

For Claimed "Digital Circuitry," Petitioner Relied On The Entirety Of Zhang Demultiplexer 230, Not Just One Chain For One Channel

PETITION

Zhang discloses **demultiplexer 230** (claimed "digital frontend (DFE)") coupled to **ADC 220** (claimed "ADC") and selecting the **target RF channels C_1-C_n** (claimed "desired channels" (*see* §VII.A.1.b, *supra*)) from the multi-channel digital RF signal (claimed "digitized signal" (*see* §VII.A.1.d, *supra*)):

Pet., 31

Zhang Demultiplexer 230 As A Whole Outputs All Channels C_1-C_n In "The Entire Signal Band," Not Just Desired Channels

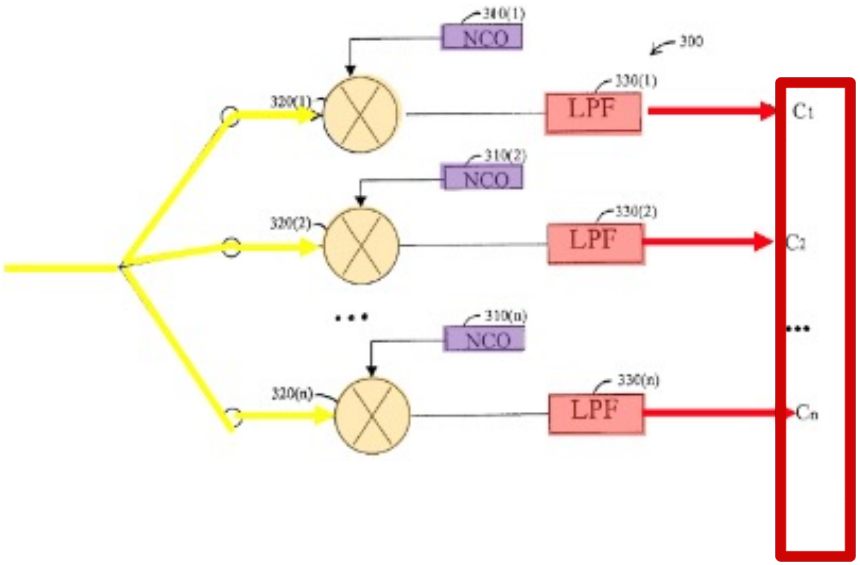

Demultiplexer 230 As A Whole Outputs All Channels C_1-C_n In The Entire Signal Band

Ex. 1013 [Zhang] [0027]

Petitioner's Reliance On Zhang's Claims' Use Of The Phrase "Target" RF Channel Is Similarly Incorrect

PETITION

Demultiplexer 230 receives the multi-channel digital RF signal from ADC 220 and selects, from this signal, a number "n" of **target RF channels C_1-C_n**, each having a unique characteristic frequency that matches a "target" frequency. Ex. 1013, [0028], [0030]-[0032], claims 1, 2, 10-11, 13, 17, 21, 23, 27-28, 30, 33-34, 36, 41, Figs. 2-3; Ex. 1002, ¶130. The target RF channels C_1-C_n selected are those that "contain content channels that are selected or used by a subscriber." Ex. 1013, [0028], [0030]-[0032], [0042], claims 34, 36-41; Ex. 1002, ¶130.

Pet., 32

Dr. Russ's Unrebutted Expert Testimony Showed That Zhang Claims Also Closely Follow Its Embodiments

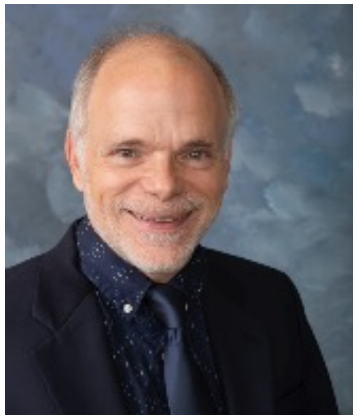

Zhang Claims	Zhang Fig. 3 (Annotated)
34. The method of claim 28 wherein the demultiplexing further comprises: **providing a plurality of select frequencies**, each select frequency being associated with a corresponding and separate RF channel; and **multiplying the at least one multi-channel RF signal** with each of the select frequencies to obtain separate RF channels. 36. The method of claim 34 further comprising **shifting the target RF channel to a baseband**. 37. The method of claim 34 further comprising **filtering undesired RF channels and passing only the target RF channel.** 38. The method of claim 37 wherein the filtering is achieved with a **low-pass filter (LPF)** 39. The method of claim 38 wherein the **LPF is a fine impulse response (FIR) filter.** 40. The method of claim 39 wherein the **FIR filter is a high-speed filter.** 41. The method of claim 34 wherein the select frequences are generated by **numeric control oscillators**.	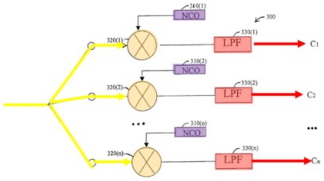 Fig. 3

Unrebutted

Petitioner Disregards That "The Same Circuitry" In '275 And Zhang By Design Perform Very Different Tasks

'275's Mixers And Filters Select Desired Channels	Zhang Mixers And Filters Extract All Channels Without Selection

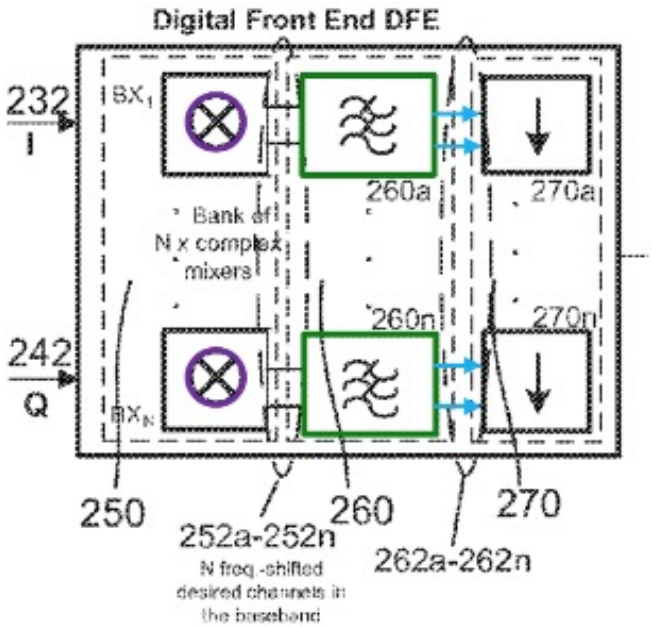

≠

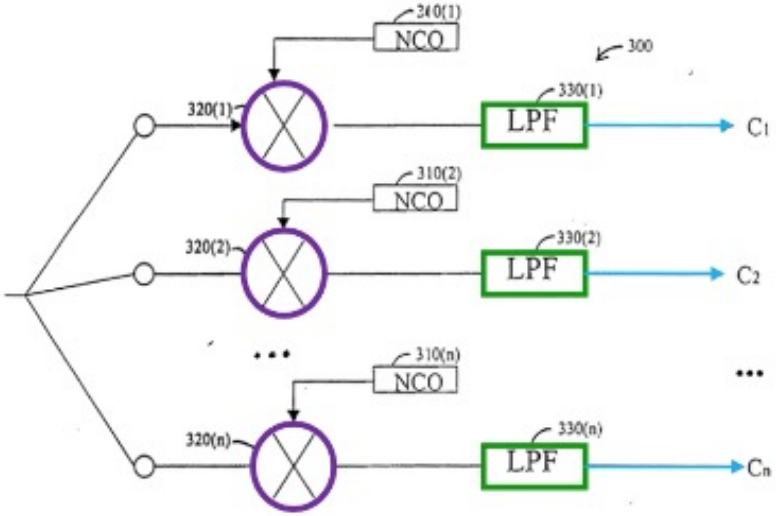

Fig. 3

'275 Pat. Fig. 2 (excerption and annotation Petitioner's)
Pet., 33

Ex. 1013 [Zhang] Fig. 3 (annotation Petitioner's)
Pet., 33

'275 Patent N ≠ Zhang n

Reply: '275 Discloses Embodiments Where All Channels Are Extracted From The Input Signal

PETITIONER'S REPLY

the "without selecting any undesired channels" language. While Dr. Russ describes one alleged embodiment, he conveniently skips other embodiments described *in the same paragraph* in which N is "equal to the number of *all* available channels that exist in the licensed frequency spectrum" or "*all* receivable channels within a geographic area." Ex. 1001, 5:60-6:1 (emphasis added), Fig. 2; Ex. 1089, 123:21-

Reply, 23

The Patent's Disclosure Of Different Embodiments Confirms That "N = Desired Channels" Is Different From "N = All Channels"

of the analog filtered signal **226**. Digital signals I **232** and Q **242** are then applied to a bank of N complex mixers **250**, wherein N is an integer value corresponding to the number of desired RF channels located in the non-contiguous portions of the frequency spectrum BW1. It is understood that the number N can be any integer value. In one embodiment, N can be equal to the number of all available channels that exist in the licensed frequency spectrum to provide system flexibility. In other embodiments, N can be equal to the number of all receivable channels within a geographic area. In yet another

Ex. 1001 ['275] 5:60:6-1

Embodiment detailed in the specification and claimed

Petitioner relies on this alternate embodiment disclosed in passing

Existence Of Alternate Embodiments Does Not Change The Plain Meaning Of "Desired Channels"

"***The mere fact that there is an alternative embodiment*** disclosed in the [patent] that is not encompassed by [our] claim construction ***does not outweigh the language of the claim, especially when the court's construction is supported by the intrinsic evidence.***"

August Tech. Corp. v. Camtek, Ltd., 655 F.3d 1278, 1285 (Fed. Cir. 2011)

Petitioner Misapprehends Patent Owner's Argument As Requiring Not Selecting Any Undesired Channels

PETITIONER'S REPLY

B. PO Misconstrues "selecting…the plurality of desired channels" to Require Not Selecting Any Undesired Channels

As explained, Zhang discloses selecting desired channels C_1-C_n without selecting undesired channels. Moreover, PO's assertion that [1E] requires this is wrong. PO mischaracterizes Zhang as "indiscriminately extract[ing] all channels from the digitized input signal without any selection" to argue that extracting all channels from the digitized signal is excluded from the claims. POR, 6. PO effectively argues that "*selecting…the plurality of desired channels*" requires *only* selecting desired channels *without selecting any undesired channels*. POR, 6-9. But [1E] places no requirement on how the system treats undesired channels, and PO's argument that "not selecting undesired channels" should be written into the claims to preclude extracting all channels is incorrect. Ex. 1085, ¶¶29-30.

Reply, 22-23

Zhang Demultiplexer 230 Performs No Selection Of Any Channels: Desired, Undesired Or Otherwise

C_1-C_n are all channels in the "entire signal band" indiscriminately demultiplexed without any selection

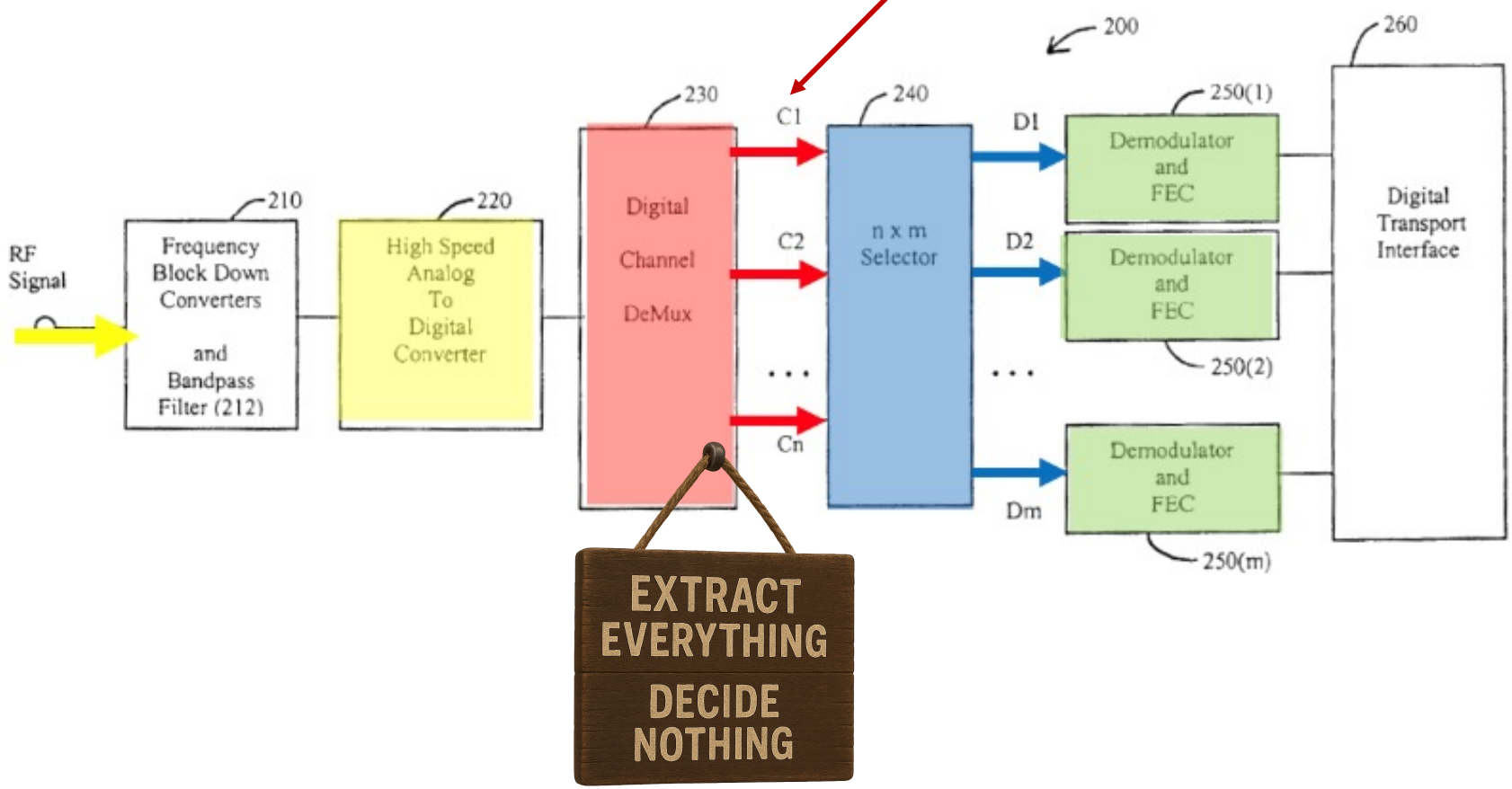

Reply Presents An Untimely New Theory Of Obviousness To Modify Zhang To Extract Less Than All Channels

Petition:	Reply:
"**Zhang discloses** demultiplexer 230 (claimed "digital frontend (DFE)") coupled to ADC 220 (claimed "ADC") and selecting the target RF channels C1-Cn (claimed "desired channels" (*see* §VII.A.1.b, *supra*)) from the multi-channel digital RF signal (claimed "digitized signal" (*see* §VII.A.1.d, *supra*))"	"**it would have at least been obvious** that C1-Cn do not include all channels in the input signal for the same reasons (given in the Petition) that it would have been obvious that C1-Cn are only the non-contiguous channels that a subscriber selects (or desires)."
Pet., 31	Reply, 19

Petitioner's Proposed Motivation: Reduce Costs

PETITIONER'S REPLY

¶21. A POSITA would have also been motivated to only demultiplex channels that a user is interested in (or subscribed to) to reduce costs by omitting unnecessary multiplier-filter chains for undesired channels, and therefore C_1-C_n would have been less than all channels in the input signal. Pet. 27-28; Ex. 1085, ¶21. Moreover,

Reply, 19

Zhang Is A Multi-User System With Many Users

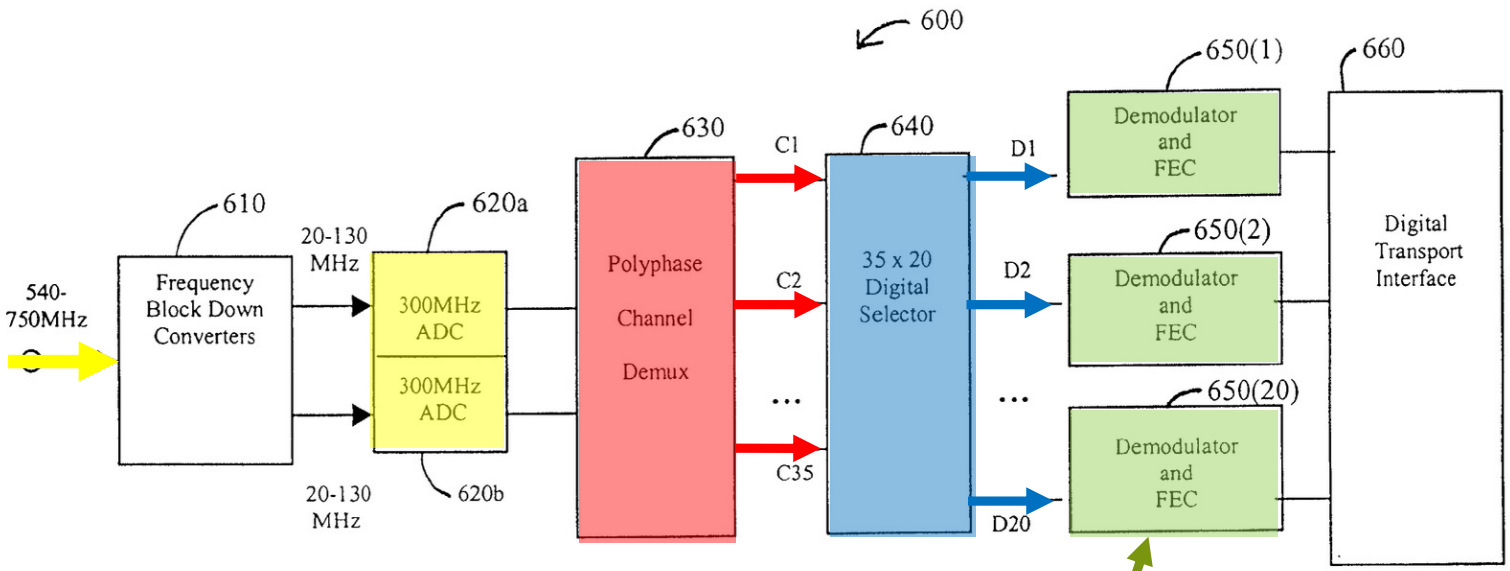

Fig. 6

20 Demodulators

An RF Channel C_1-C_n Must Be Demodulated Even If A User Needs To Watch One Of 18 Content Channels In The RF Channel

Weimin Zhang

A single separate RF channel can have multiple separate content signals, e.g., 18 content channels per RF channel.

Ex. 1013 [Zhang] [0042]

DEPOSITION OF DAVID B. LETT

1 Q So a single RF channel may, for instance,
2 contain channels HBO, National Geographic and Disney;
3 correct?
4 A Sure.
5 Q And if a user can -- or chooses to watch only
6 one of those channels, let's say HBO, that entire RF
7 channel would still have to be extracted from the input
8 signal; correct?
9 A So you have to demodulate that RF channel that
10 contains those three programs.

Ex. 2031 [Lett-Depo.] 233:1-10

Zhang Does Not Disclose A Logic To Dynamically Track Subscribed Content Channels For Each Of Many Users, Map Those To RF Channels, And Selectively And Dynamically Change Extracted RF Channels

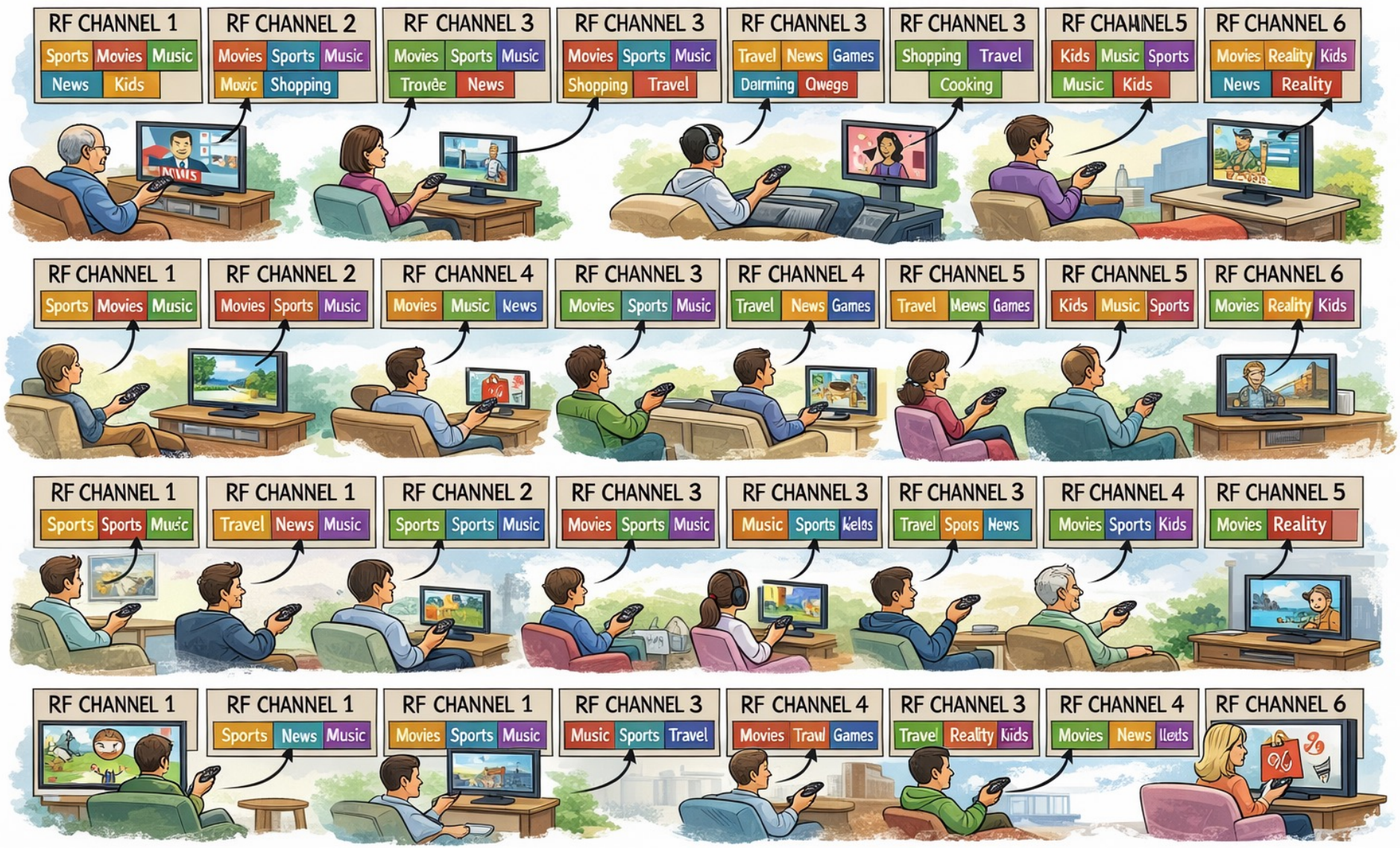

Zhang Decided That Its Architectural Design Is To Extract All Channels And Have Selector 240 Select Desired Channels

Extract All Channels Instead Of Complicated Logic Tracking Many Users

Select Desired Channels To Send To Demodulators

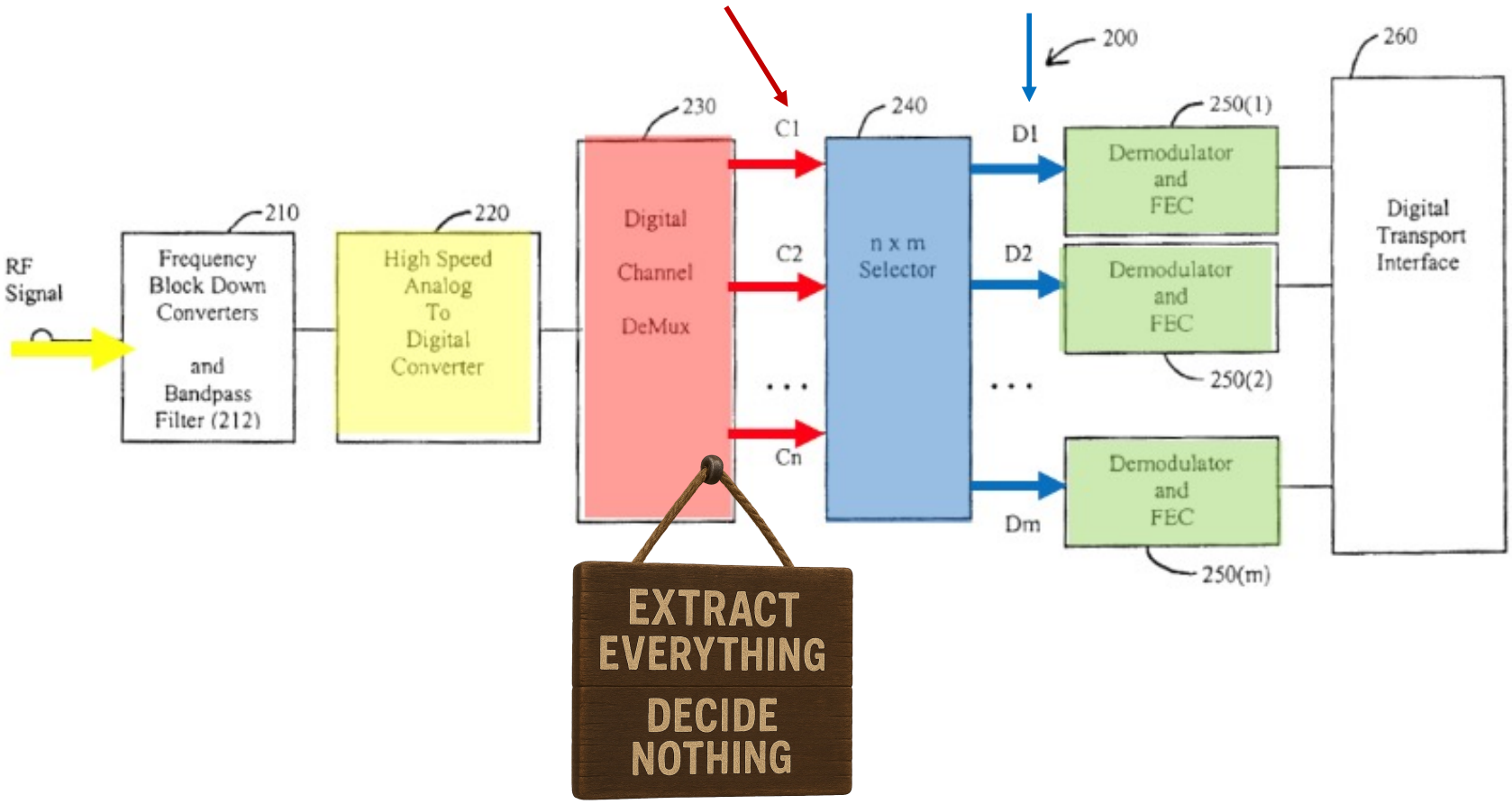

Reply: Undesired Channels Are Frequencies Intervening Channels C_1-C_n Such As "Aeronautical Channels"

PETITIONER'S REPLY

Zhang's demultiplexer 230 would not have targeted channels in the frequencies between the desired television channels C_1-C_n, and therefore C_1-C_n would not have included all channels in the input signal. Ex. 1089, 143:20-144:7 (agreeing C_1-C_n do not include aeronautical radionavigation channels); *see also id.*, 47:1-50:22,

Reply, 19

Claim 1: "Undesired Channels" Are "Broadcast Channels," Not "Aeronautical" Frequencies

US 11,785,275

1. A method for operating a television receiver, comprising:

receiving, by an input terminal, an input signal comprising broadcast channels, the broadcast channels comprising a plurality of desired channels and a plurality of undesired channels, wherein the plurality of desired channels are non-contiguous;

processing, by a radio front end coupled to the input terminal, the input signal to generate a processed input signal;

digitizing, by an analog-to-digital converter (ADC) coupled to the radio front end, the processed input signal to generate a digitized signal;

selecting, by a digital frontend (DFE) coupled to the ADC, the plurality of desired channels from the digitized signal; and

outputting, by the DFE, the selected plurality of desired channels to at least one demodulator as a digital datastream, wherein the demodulator extracts information encoded in the digital datastream.

Petitioner's Second Alternative Fails: Channels D_1-D_m Are Not Selected "From The Digitized Signal"

'275 Claim 1:

[1d] digitizing, by an analog-to-digital converter (ADC) coupled to the radio front end, the processed input signal to generate a digitized signal;

[1e] selecting, by a digital frontend (DFE) coupled to the ADC, the plurality of desired channels from the digitized signal; and

outputting, by the DFE, the selected plurality of desired channels to at least one demodulator as a digital datastream, wherein the demodulator extracts information encoded in the digital datastream.

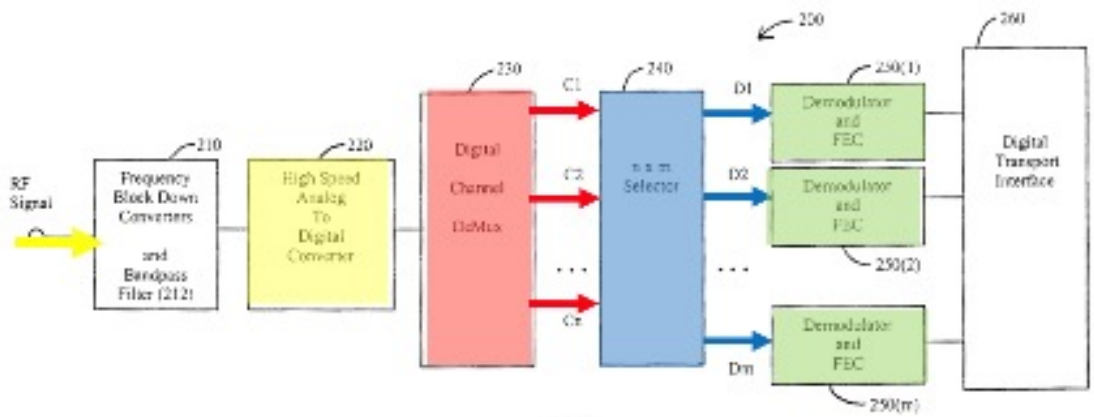

Fig. 2

Petitioner Maps The Input Of Zhang Demultiplexer 230 To Claimed "Digitized Signal" Generated In 1[d]

'275 Claim 1:

[1d] digitizing, by an analog-to-digital converter (ADC) coupled to the radio front end, the processed input signal to generate a digitized signal;

[1e] selecting, by a digital frontend (DFE) coupled to the ADC, the plurality of desired channels from the digitized signal; and

outputting, by the DFE, the selected plurality of desired channels to at least one demodulator as a digital datastream, wherein the demodulator extracts information encoded in the digital datastream.

Digitized "plurality of frequencies" relied upon by Petition for 1[C]

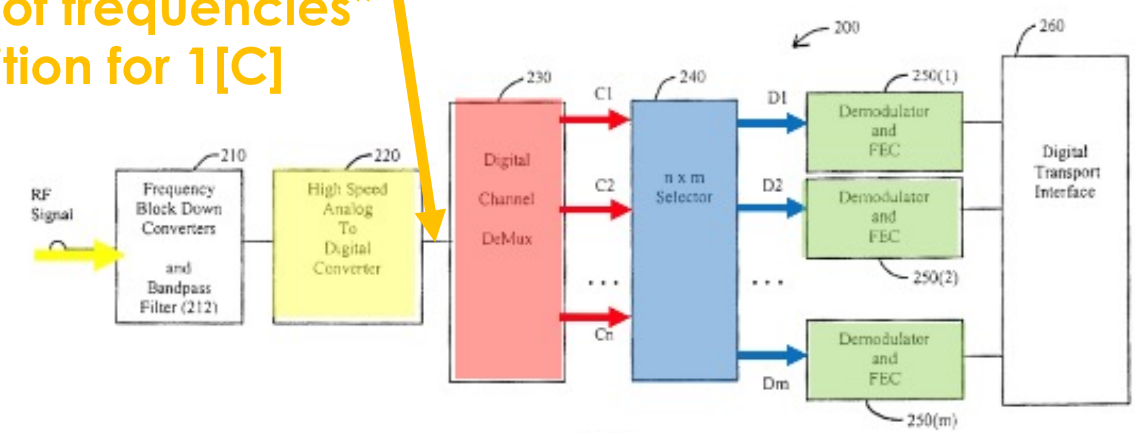

Fig. 2

Zhang Channels D_1-D_m Are Selected From Channels C_1-C_n, Not From The Input Of Demultiplexer 230

Channels D_1-D_m Are Selected From Channels C_1-C_n

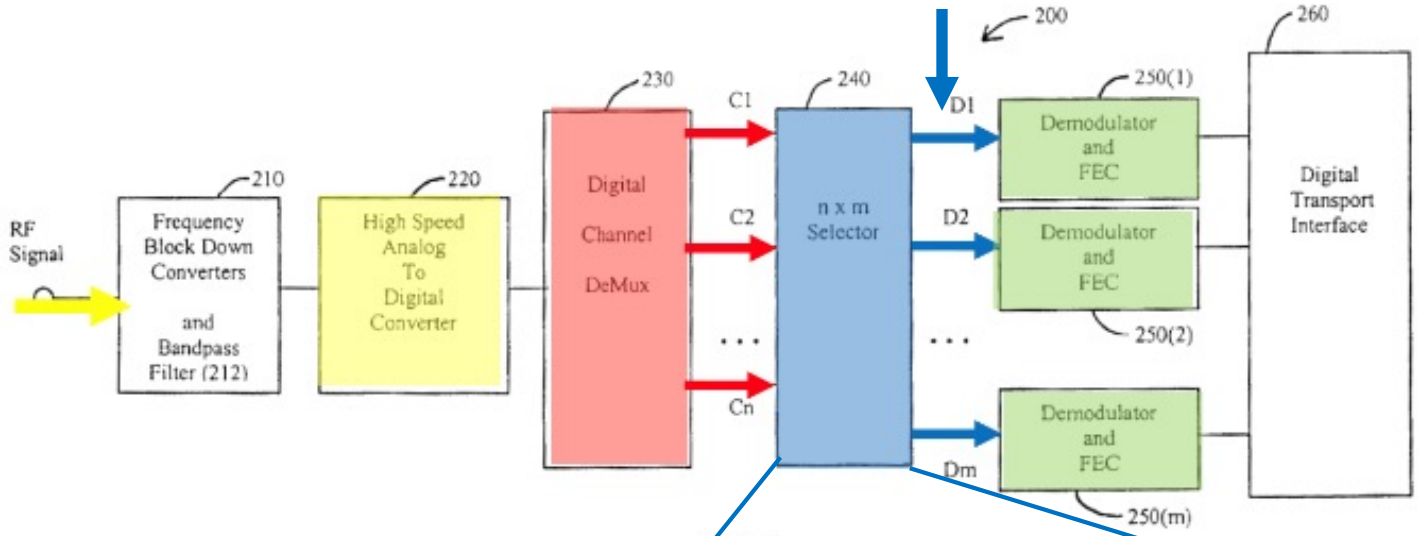

Fig. 2

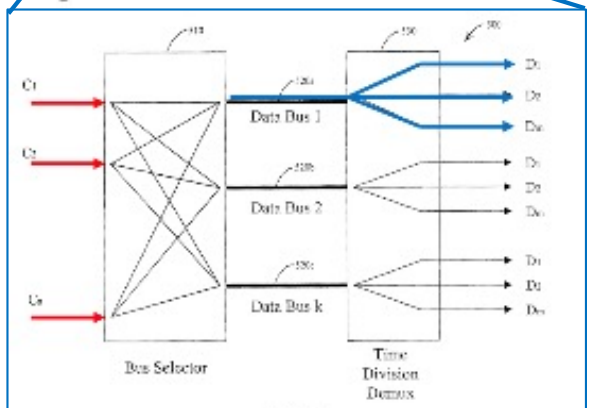

Fig. 5

Zhang Expressly States That Channels D_1-D_m Are Selected "From" Channels C_1-C_n, Not From The Digitized Signal

Claim 1: desired channels are "select[ed] … from the digitized signal"	**Ex. 1013 [Zhang]: channels D1-Dm are "select[ed] … from one or more of the digital RF channels C1 to Cn"**
[1D] digitizing, by an analog-to-digital converter (ADC) coupled to the radio front end, the processed input signal to **generate a digitized signal** [1E] **selecting**, by a digital frontend (DFE) coupled to the ADC, **the plurality of desired channels from the digitized signal**	"An ADC 220 then **converts** the down-converted multi-channel analog RF signal **to a multi-channel digital RF signal**." [0027] "A digital channel demultiplexer 230 then demultiplexes **the multi-channel digital RF signal into separate digital RF channels C1 to Cn**." [0028] "an n×m digital selector 240 receives the demultiplexed digital RF channels C1 to Cn, and then **selects one or more of the RF channels D1 to Dm from one or more of the digital RF channels C1 to Cn**." [0028]

Reply: Demultiplexer 230 + Selector 240 Together Select D_1-D_m "From The Digitized Singal" Input To Demultiplexer 230

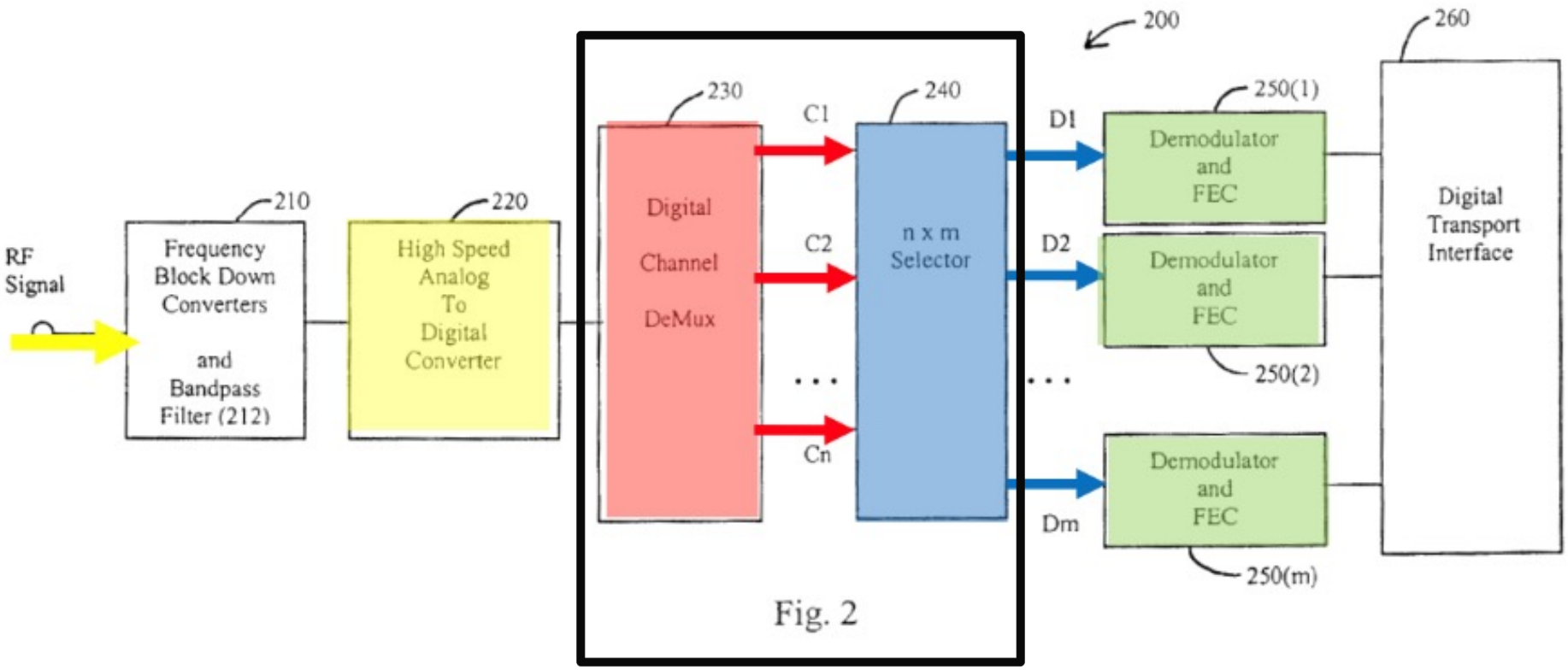

Alleged circuitry that selects D_1-D_m from the input to Demultiplexer 230

A Larger Box Does Not Change Zhang's Architectural Choice Of Selecting D_1-D_m "From" Channels C1-Cn

No matter what is mapped to the claimed DFE, Zhang channels D_1-D_m are selected from channels C_1-C_n not from the digitized signal.

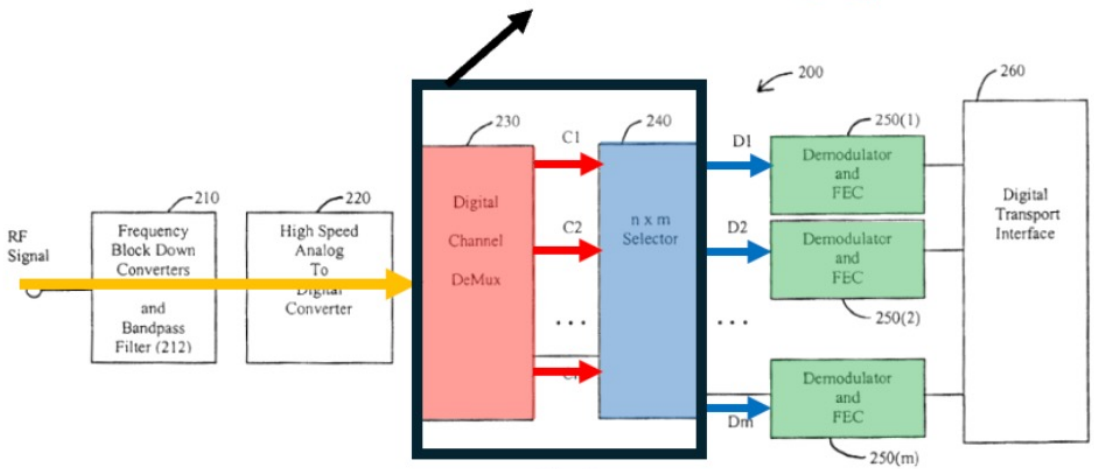

Fig. 2

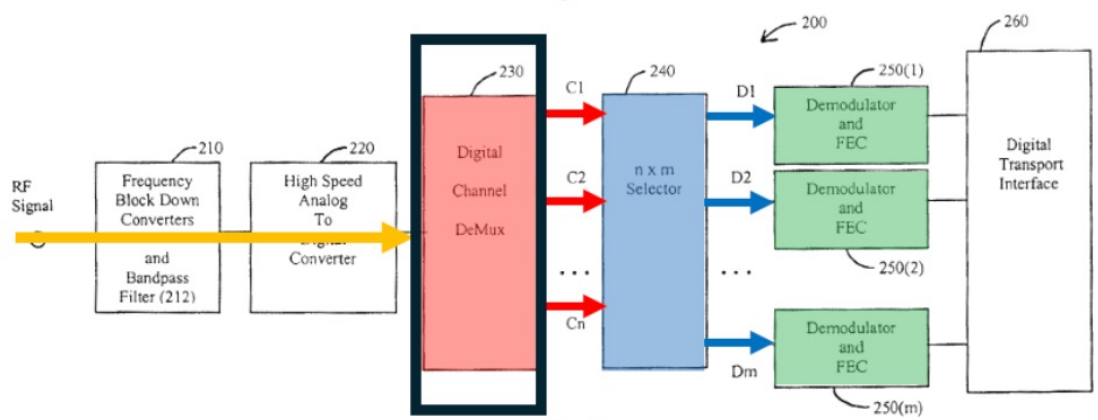

Fig. 2

Petitioner Incorrectly Asserts That The Output Of A Blackbox Is Necessarily Selected From The Input Of The Blackbox

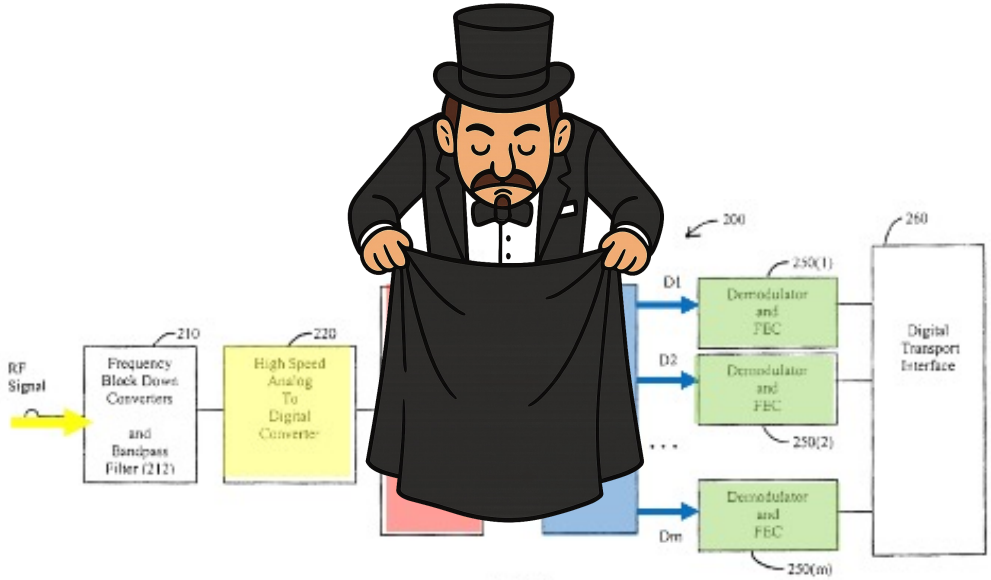

Fig. 2

PETITIONER'S REPLY

As shown below, the input to the relied-upon DFE in Zhang (i.e., input to 230) is the digitized signal from the ADC 220, *not* the individual channels C_1-C_n. And, the output of the relied-upon DFE is D_1-D_m, which are the desired channels. It necessarily follows that the relied-upon DFE is selecting desired channels D_1-D_m "from the digitized signal." Ex. 1090, 26-29; *see also* Ex. 1089, 123:13-20.

Why?

Reply, 9

Merely Similar Results (*e.g.*, Output Of Desired Channels) Does Not Disclose The Claims

"A process patent, however, claims not a structural entity, 'but rather an operation or series of steps leading to a useful result.' 1 *Chisum on Patents* § 1.03, at 1-58 (2000). Thus, ***the very details regarding how such "useful result" has come about are at the heart of a process patent***, whereas the process by which a patented product is obtained is ordinarily irrelevant to a product patent."

Amgen, Inc. v. Hoechst Marion Roussel, 126 F. Supp. 2d 69, 101 (D. Mass. 2001) aff'd in relevant part, 314 F.3d 1313, 1346-1347 (Fed. Cir. 2003)

Zhang's Failure To Disclose The "Select" Limitation Is Similar To The Deficiency Found By Examiner During Prosecution

NOTICE OF ALLOWANCE

The following is a statement of reasons for the indication of allowable subject matter: the prior art made of record teach a receiver for a wireless telecommunication system teach all of the adjacent frequency bands in the IF signal passed by a band pass filter in the radio frontend are converted to a digital signal by an ADC and then separated into their respective frequency bands by a channelizer where the separated frequency bands are processed in the normal manner by subsequent DSP devices, see Claxton et al. US 6,735,421. The prior art made of record do not teach selecting, by a digital frontend (DFE) coupled to the ADC, a plurality of desired channels from the digitized signal and outputting by the DFE, the selected plurality of desired channels to at least one demodulator as a digital datastream.

Ex. 2025 [NOA] 7

Claim Differentiation: '866 Claims (Same Specification) Recite "Select" But Not "From The Digitized Signal"

'275 Patent Limitation 1[e]	'866 Patent Limitation 1[b]
"selecting, by a digital frontend (DFE) coupled to the ADC, the plurality of desired channels from the digitized signal"	"a digital frontend (DFE) coupled to the wideband ADC, wherein the DFE is configured to concurrently select and provide each of the plurality of desired channels, via a serial interface, without providing any of the plurality of undesired channels."

Petitioner Presents A Misleading Annotation Of Zhang To Suggest Demultiplexer 230 (Left) Selects Two Channels

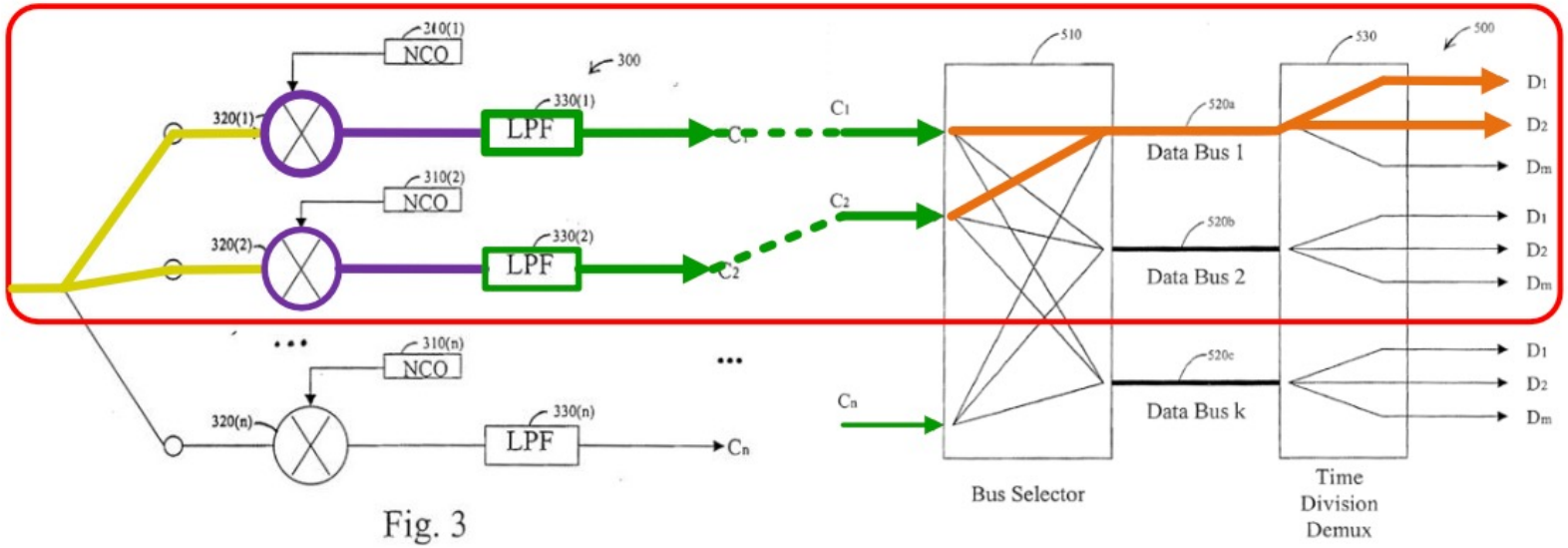

Ex. 1013, Figs. 3, 5 (annotated)

Reply, 11

Petitioner's Annotation Of Zhang Is Misleading

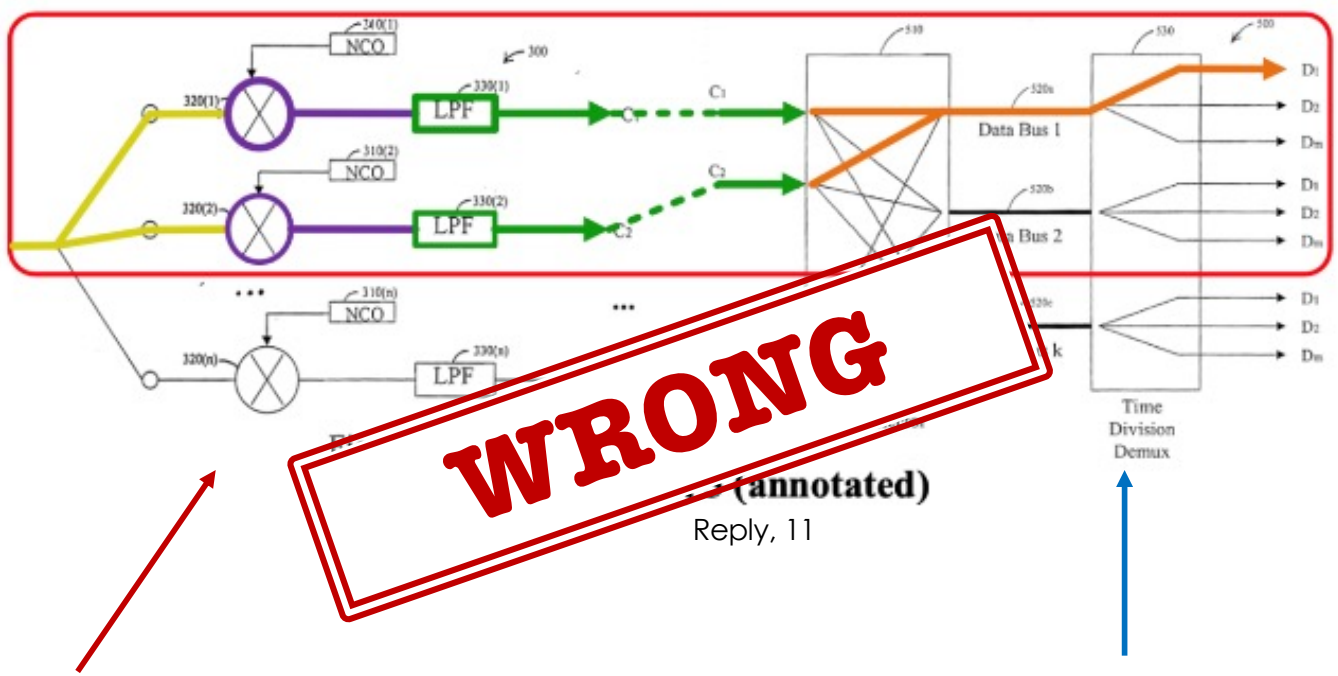

Reply, 11

Correct Explanation:

Demultiplexer 230 does not select any two channels but indiscriminately demultiplexes all channels C_1-C_n.

Correct Explanation:

Selector 240 Subsequently Selects Desired Channels D_1-D_m From Demultiplexed Channels C_1-C_n

Petitioner Annotates Zhang And ’275 Patent To Suggest They Operate Similarly

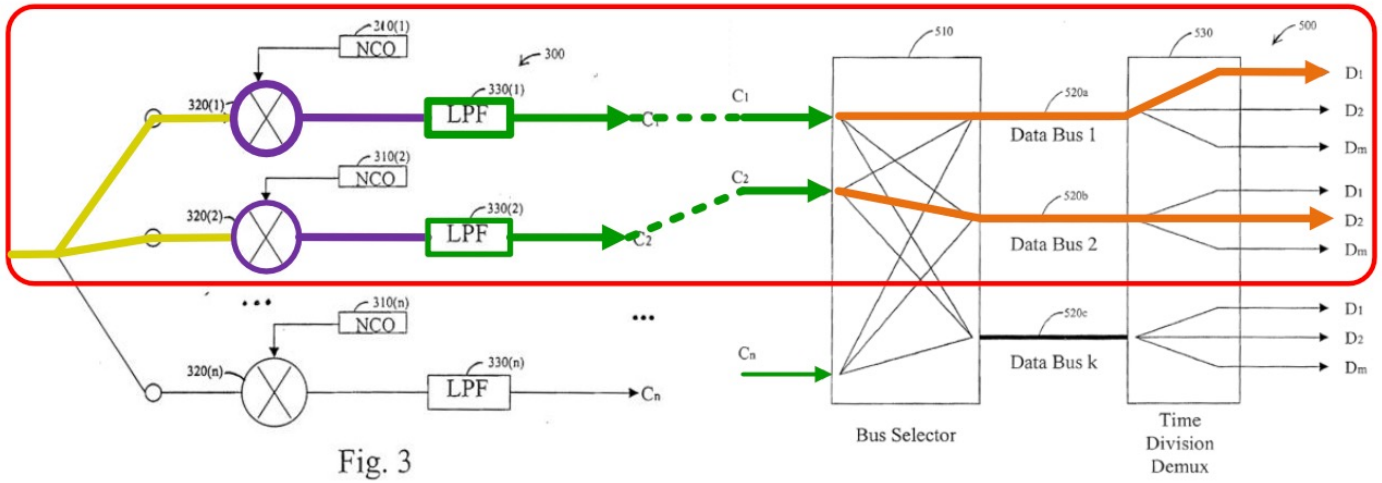

Ex. 1013, Figs. 3, 5 (annotated)

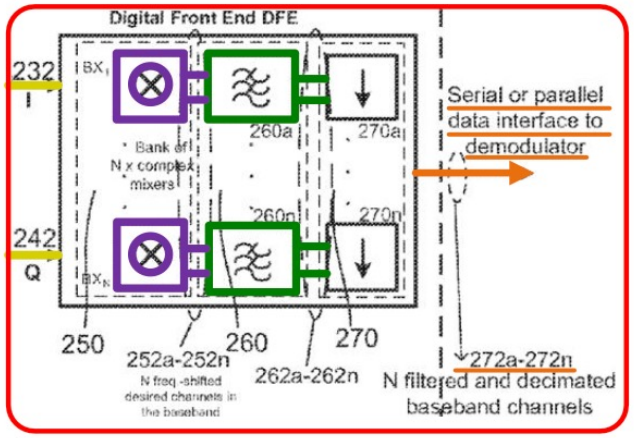

Ex. 1001, Fig. 2 (annotated)

Reply, 11

Zhang And '275 Are Fundamentally Different With Respect To Where And How Desired Channels Are "Selected"

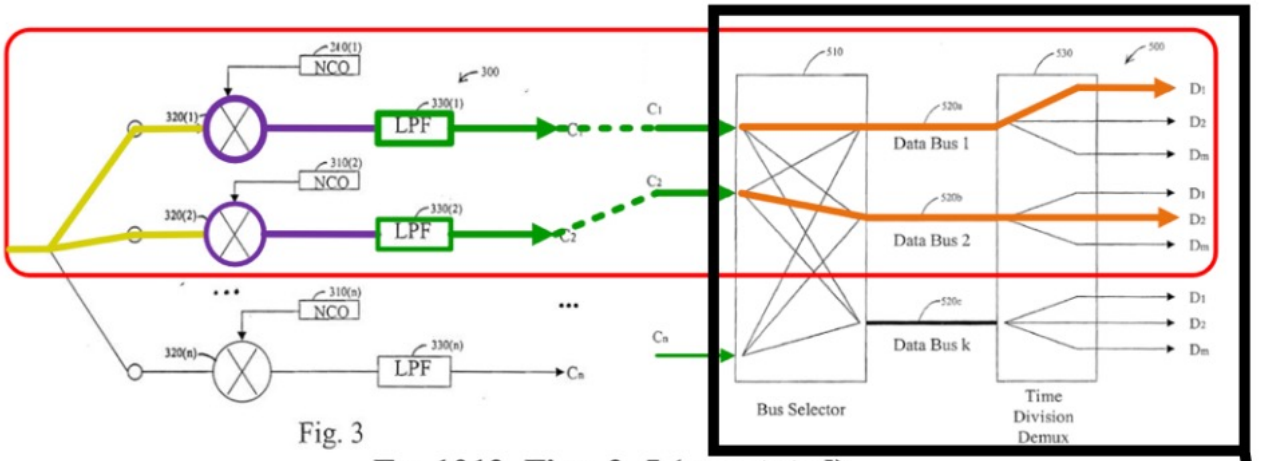

Fig. 3

Ex. 1013, Figs. 3, 5 (annotated)

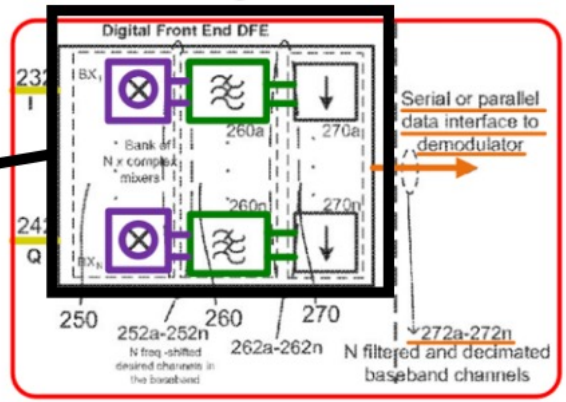

Ex. 1001, Fig. 2 (annotated)

'275 selects desired channels here from the digitized signal

Zhang selects desired channels here from extracted channels C_1-C_n

Reserve

Zhang European Counterpart Recites A Channel Demultiplexer To Demultiplex C_1-C_n, And A Selector To Select D_1-D_m

European Patent Application No. 02759732.7.2415

1. A digital multi-channel demodulator circuit (200, 600) for processing a multi-channel analog RF signal, the multi-channel demodulator comprising:

a frequency-block down-converter (310, 610) configured to receive the analog RF signal and to shift the analog RF signal to a lower frequency band;

an analog-to-digital converter (ADC) (220, 620) configured to receive the analog RF signal from the frequency-block down-converter and to convert the analog RF signal to a multi-channel digital RF signal;

a digital channel demultiplexer (230, 300, 400, 630) configured to receive the digital RF signal from the ADC and to demultiplex the digital RF signal into separate digital RF channels ($C_1 \ldots C_n$);

a selector (240, 500, 620) configured to receive the separate digital RF channels and to select one or more separate digital RF channels ($D_1 \ldots D_m$); and

one or more demodulators (250 (1…m)) configured to receive one or more of the selected digital RF channels ($D_1 \ldots D_m$); from the selector and to demodulate the one or more selected digital RF channels.

Ex. 2016 [Zhang-EPO-Reply] 4

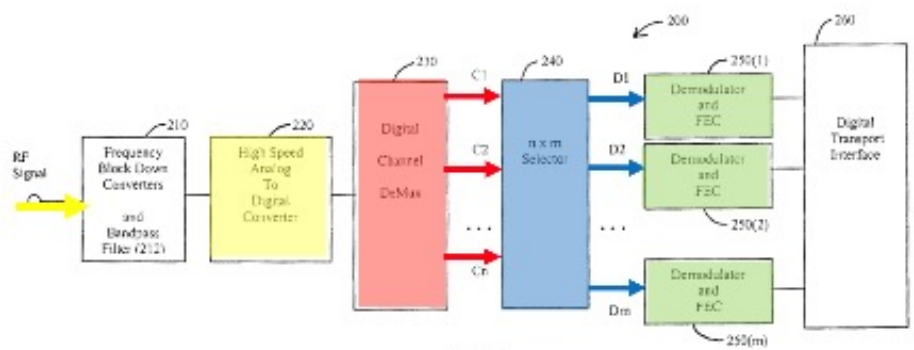

Fig. 2

Zhang Figure 5 Implements Its Selector 240 That Selects Channels D_1-D_m From All Channels C_1-C_n

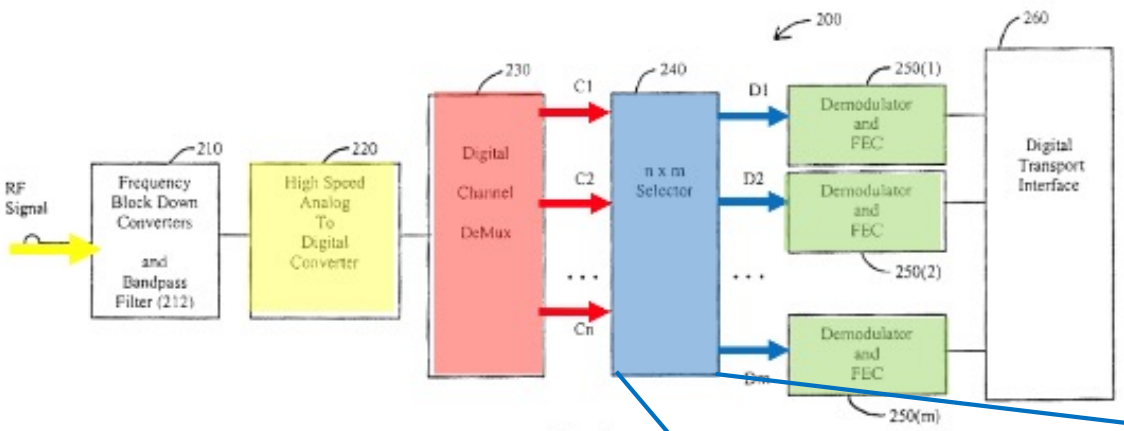

Fig. 2

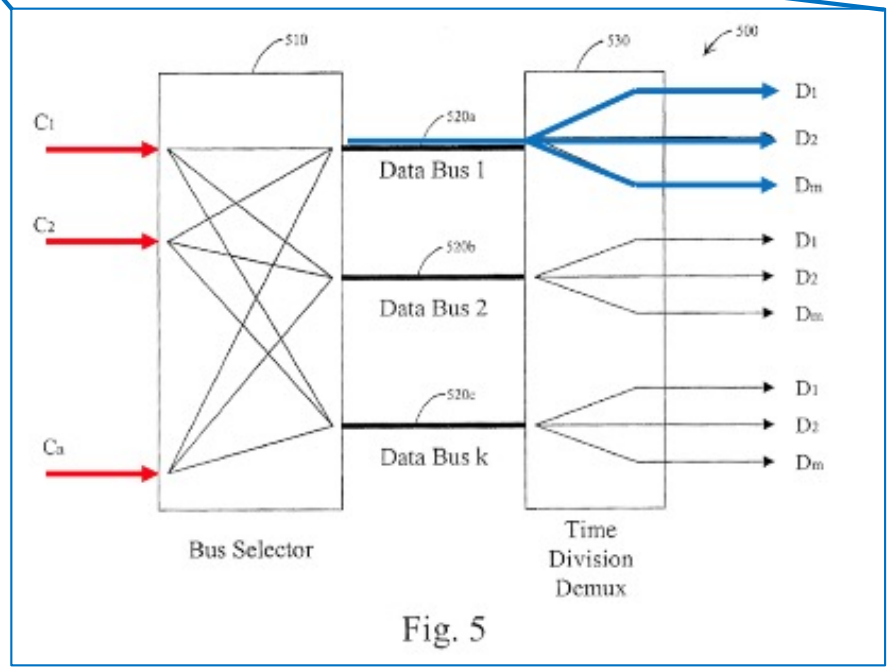

Fig. 5

What Is Output From Zhang's Selector Is Channels D_1-D_m, Not Channels C_1-C_n

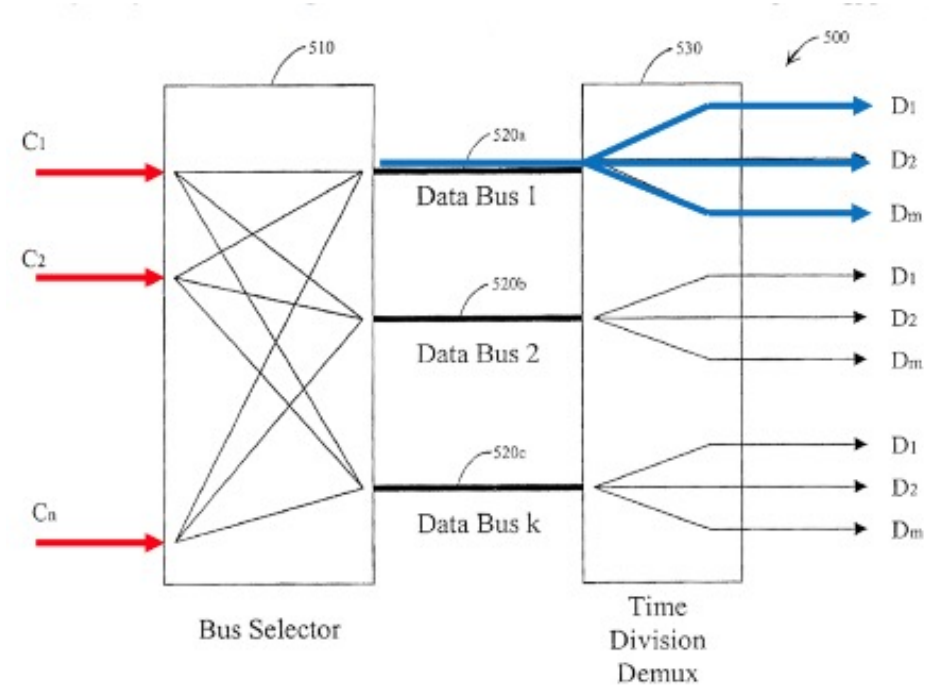

Weimin Zhang

Fig. 5

[0039] In operation, digital selector **500** digitally selects one or more RF channels D_1 to D_m from the digital RF channels C_1 to C_n and then sends them to appropriate demodulators or output ports (not shown) through different data buses (not shown). Because a bus clock is much faster

Petitioner Fails To Show Zhang Selector 240 Is A Part Of The Claimed "Digital Frontend (DFE)"

'275 Cl. 1:

selecting, by a digital frontend (DFE) coupled to the ADC, the plurality of desired channels from the digitized signal; and

Petitioner's Expert: Zhang Selector 240 Corresponds To The <u>Output</u> Of The Patent's DFE, Not To The DFE

Mapping By Petitioner's Expert

Ex. 1002 [Lett-1st-Decl.] ¶ 81

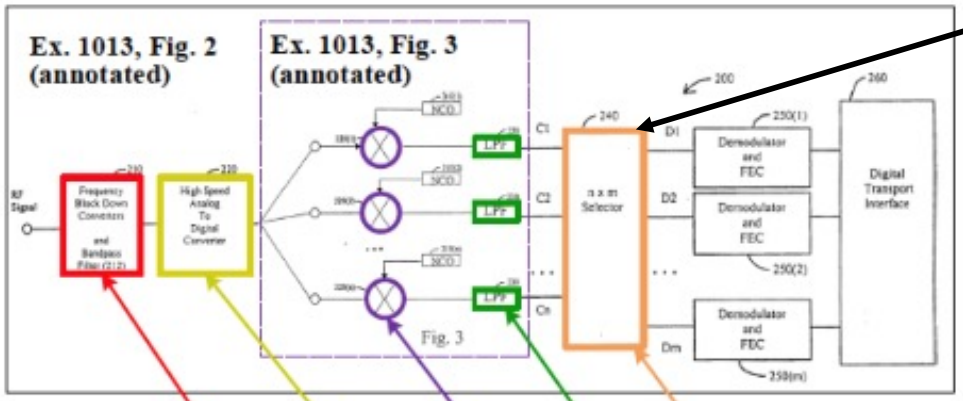

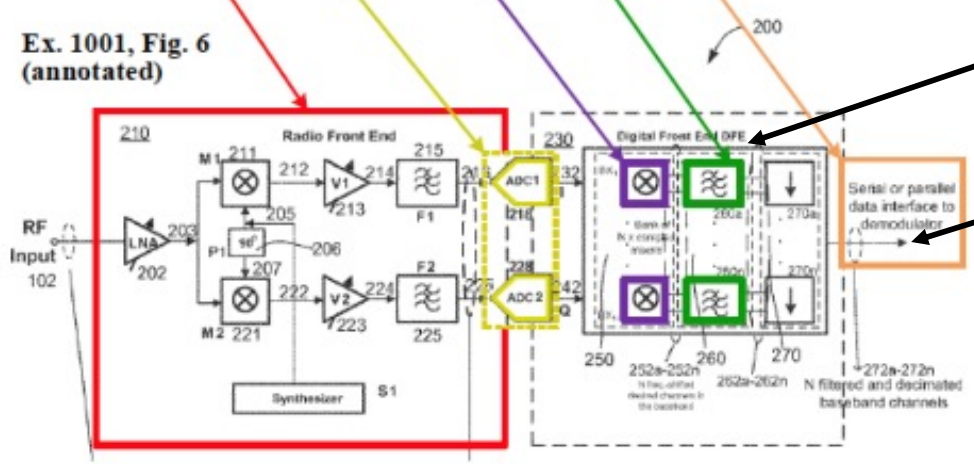

Zhang Selector 240

DFE In '275 Patent Specification

Output Of The DFE In The '275 Patent Specification

Petitioner's Expert At Deposition Repeatedly Defended Mapping Zhang Selector 240 To The Output Of The Patent's DFE

DEPOSITION OF DAVID B. LETT

16 Q Now, why did you map in purple the n×m
17 selector 240 in Zhang to the output of the Digital
18 Front End DFE arrow titled serial or parallel to
19 demodulator in Figure 6 of the '866 patent?
20 A Because the n×m selector outputs serial
21 or parallel interface to a demodulator.

Ex. 2018 [Lett-1st-Depo.-Volume-I] 145:16-21

4 Q So in your opinion, would it be wrong to
5 map the n×m selector 240 from Zhang to the output
6 of filters 260 within the digital front end in
7 Figure 6 of the '866 patent?
8 A Well, the output of the Figure 6
9 annotated below is on the right side. And what
10 we're mapping to is the output to demodulators.
11 So it is more logical to map that to the output.
12 And then we come along later and explain the
13 decimation.

Ex. 2019 [Lett-Depo.] 147:4-13

Mapping By Petitioner's Expert

Ex. 1002 [Lett-1st-Decl.] ¶ 79

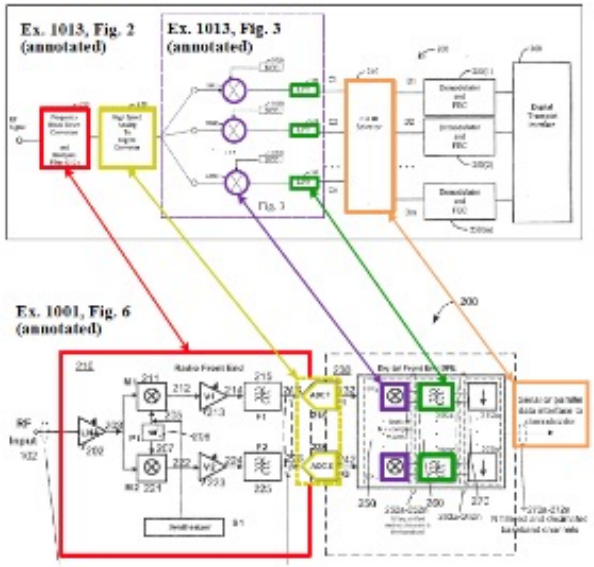

Petitioner's Expert: Merely Being "Digital" Is Not Sufficient To Be Part Of The DFE, Depends On Specific Context And Product

DEPOSITION OF DAVID B. LETT

13 Q. Is anything that has some digital
14 circuitry in it considered digital front end?
15 A. I don't think so. I mean I think you'd
16 have to be more specific than that.

Ex. 2021 [Lett-2nd-Depo.] 108:13-16

24 Q. Now, Mr. Lett, is the term "digital
25 front end" a term of art that a POSITA would know
1 what it means in general in this field?
2 MR. CUVIELLO: Objection. Form.
3 THE WITNESS: Well, I think one would
4 need to put it in the context of the type of product
5 we're talking about to get a general idea.
6 So, digital front end in one type of
7 product may be totally different than another. But

Ex. 2021 [Lett-2nd-Depo.] 107:24-108:7

Petitioner Fails To Meet Its Burden To Show What The Claimed Digital Front End Is And Why Zhang Selector 240 Is A Part Of It

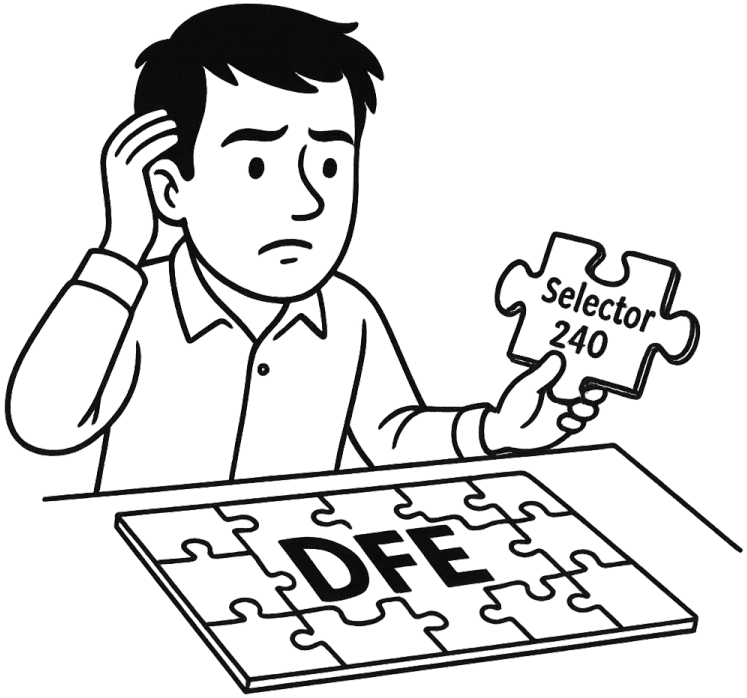

"In an *inter partes* review, the ***burden of persuasion is on the petitioner*** to prove unpatentability by a preponderance of the evidence, 35 U.S.C. § 316(e), and ***that burden never shifts to the patentee***."

In re Magnum Oil Tools Int'l, Ltd., 829 F.3d 1364, 1375 (Fed. Cir. 2016)

Petitioner Does Not Provide Any Analysis Why Its Newly Relied Upon Combinations Disclose The Claimed DFE

Up-Conversion: Baseband Signal Containing Information Is Modulated On High Frequency Carrier Signal For Transmission

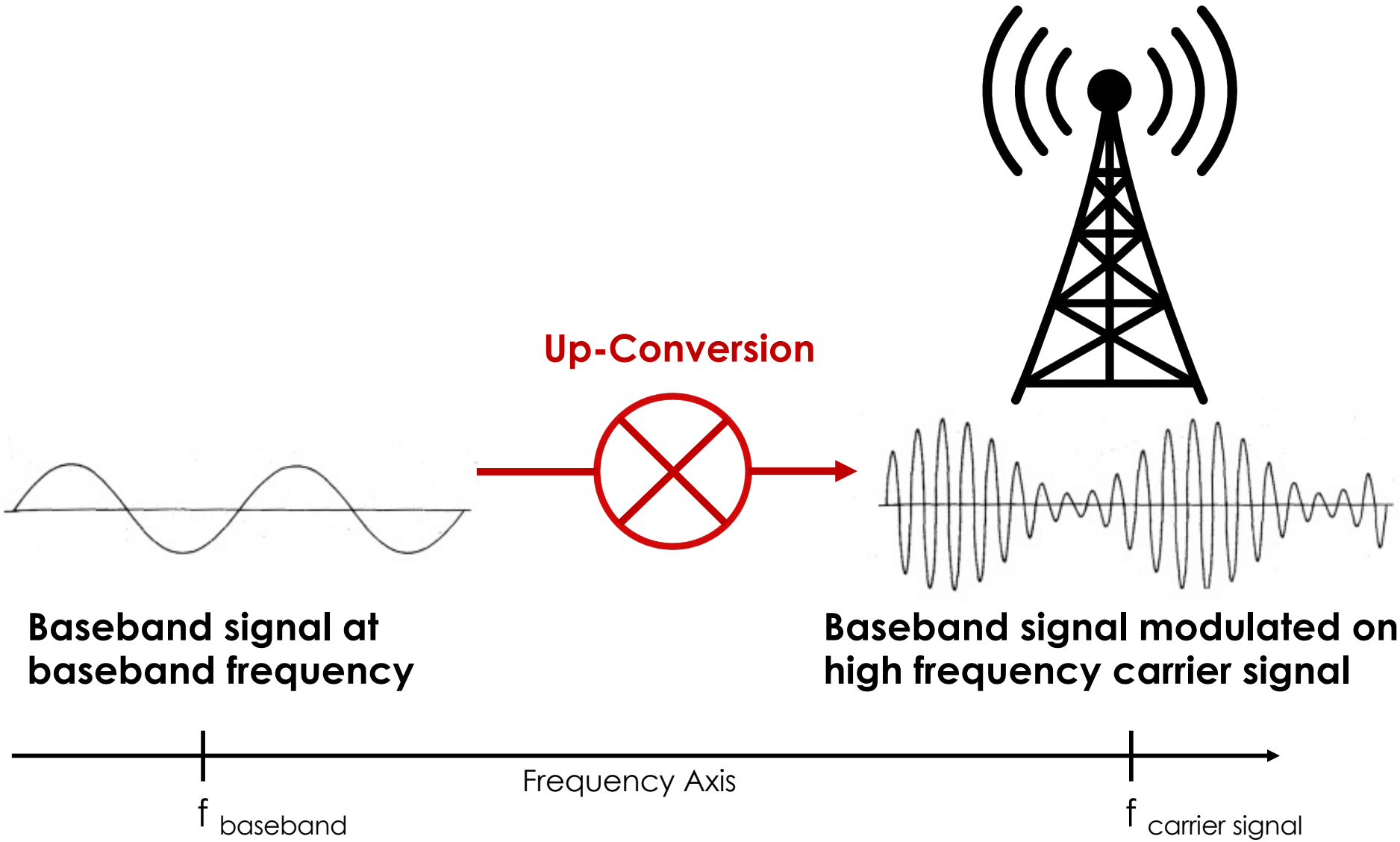
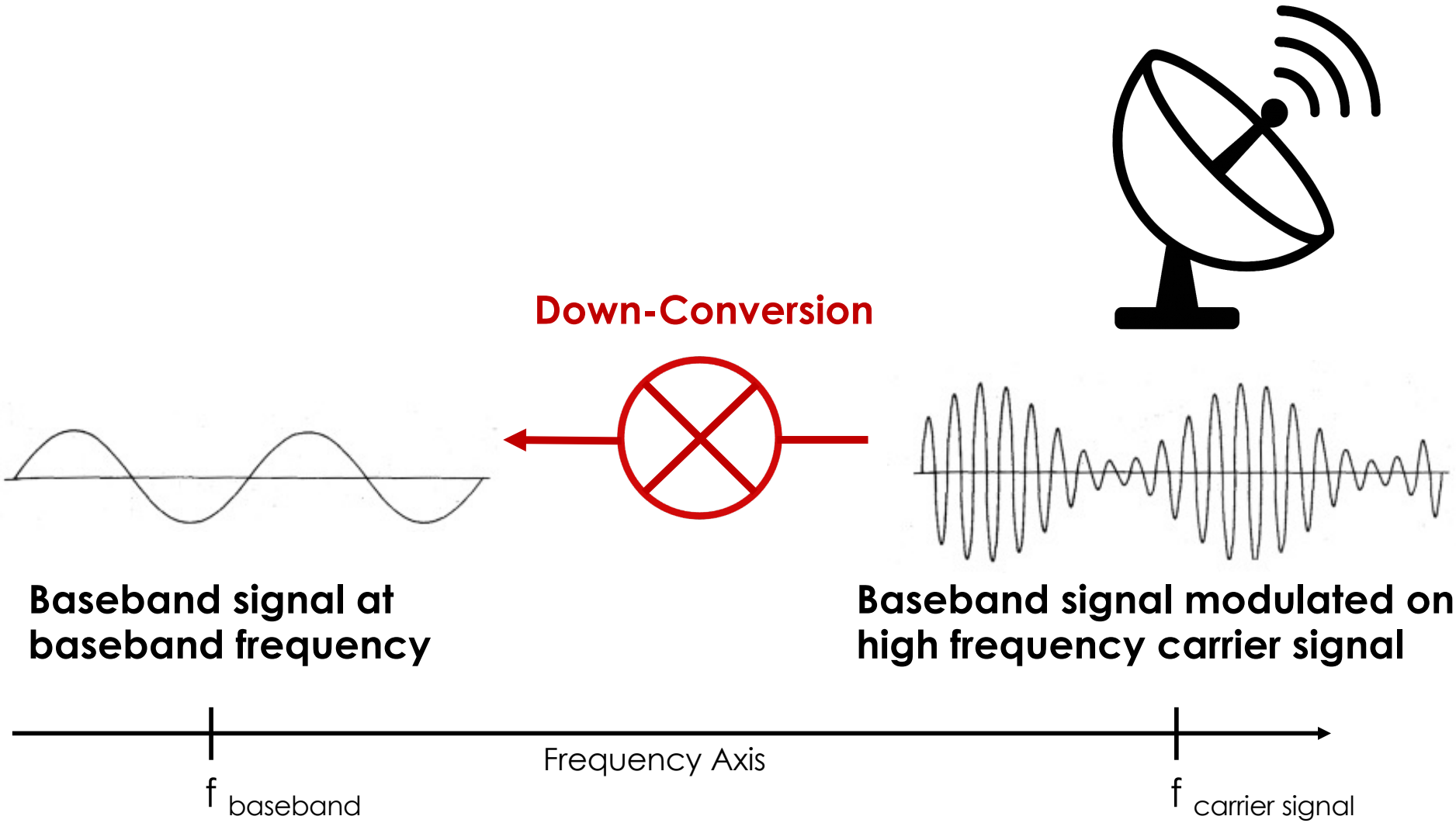
Down-Conversion: A Receiver Down-Converts The Received Signal From Carrier Frequency To Baseband Frequency