US007340230B2

(12) **United States Patent**
Khoini-Poorfard et al.

(10) **Patent No.: US 7,340,230 B2**
(45) **Date of Patent: Mar. 4, 2008**

(54) **RECEIVER ARCHITECTURES UTILIZING COARSE ANALOG TUNING AND ASSOCIATED METHODS**

(75) Inventors: **Ramin Khoini-Poorfard**, Austin, TX (US); **Andrew W. Krone**, Austin, TX (US)

(73) Assignee: **Silicon Laboratories Inc.**, Austin, TX (US)

(*) Notice: Subject to any disclaimer, the term of this patent is extended or adjusted under 35 U.S.C. 154(b) by 300 days.

(21) Appl. No.: **10/412,963**

(22) Filed: **Apr. 14, 2003**

(65) **Prior Publication Data**

US 2004/0205820 A1 Oct. 14, 2004

(51) **Int. Cl.**
H04B 7/08 (2006.01)

(52) **U.S. Cl.** **455/132**; 455/139.2; 455/182.3; 455/179; 375/136; 375/146; 375/147

(58) **Field of Classification Search** 445/132, 445/133, 313, 318, 323, 334, 427, 12.1, 3.02; 375/344
See application file for complete search history.

(56) **References Cited**

U.S. PATENT DOCUMENTS

5,210,504 A 5/1993 Yagita et al.
5,280,636 A * 1/1994 Kelley et al. 455/131
5,375,146 A 12/1994 Chalmers
5,392,450 A * 2/1995 Nossen 455/12.1
5,446,756 A * 8/1995 Mallinckrodt 375/130
5,617,090 A 4/1997 Ma et al.
5,742,638 A 4/1998 Smith 375/200
5,752,174 A 5/1998 Matai et al. 455/183.1
5,841,814 A * 11/1998 Cupo 375/321
5,861,831 A 1/1999 Murden et al.
5,892,823 A 4/1999 Stelman 379/390.01
5,901,184 A 5/1999 Ben-Efraim et al.
5,982,823 A * 11/1999 Jacklin 375/344
6,031,878 A 2/2000 Tomasz et al. 375/316
6,091,931 A 7/2000 Ben-Efraim et al.

(Continued)

OTHER PUBLICATIONS

Copending U.S. Appl. No. 10/412,961, filed Apr. 14, 2003, "Method for Tuning a Bandpass Analog-to-Digital Converter and Associated Architecture".

(Continued)

Primary Examiner—Nay Maung
Assistant Examiner—Richard Chan
(74) *Attorney, Agent, or Firm*—O'Keefe, Egan, Peterman & Enders, LLP

(57) **ABSTRACT**

Receiver architectures and associated methods are disclosed that provide initial analog coarse tuning of desired channels within a received signal spectrum, such as a set-top box signal spectrum for satellite communications. These architectures provide significant advantages over prior direct down-conversion (DDC) architectures and low intermediate-frequency (IF) architectures, particularly where two tuners are desired on the same integrated circuit. Rather than using a low-IF frequency or directly converting the desired channel frequency to DC, initial coarse tuning provided by analog coarse tuning circuitry allows for a conversion to a frequency range around DC. This coarse tuning circuitry can be implemented, for example, using a large-step local oscillator (LO) that provides a coarse tune analog mixing signal. Once mixed down, the desired channel may then be fine-tuned through digital processing, such as through the use of a wide-band analog-to-digital converter (ADC) or a narrow-band tunable bandpass ADC.

20 Claims, 20 Drawing Sheets

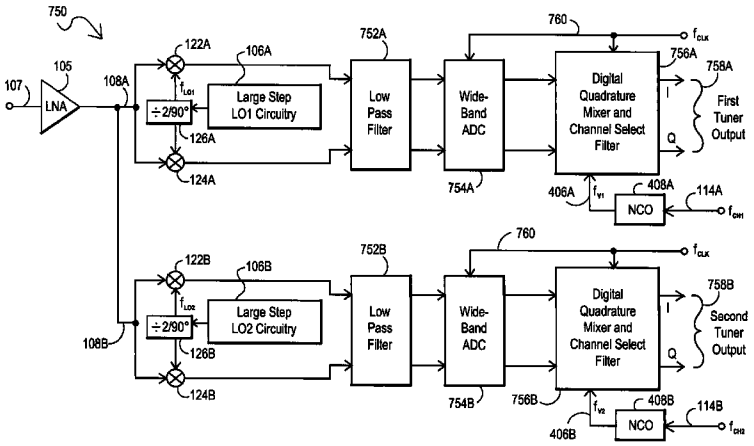

Comcast, Ex. 1135

U.S. PATENT DOCUMENTS

6,118,824	A	9/2000	Smith et al.	375/259
6,134,429	A	10/2000	Feyfant et al.	455/324
6,148,184	A	11/2000	Manku et al.	455/110
6,218,972	B1	4/2001	Groshong	
6,282,249	B1	8/2001	Tomesen et al.	
6,332,006	B1	12/2001	Rybeck et al.	375/262
6,353,645	B1	3/2002	Solve et al.	375/354
6,356,736	B2	3/2002	Tomasz et al.	455/3.02
6,363,262	B1 *	3/2002	McNicol	455/561
6,377,315	B1	4/2002	Carr et al.	348/726
6,385,262	B1	5/2002	Gustafsson et al.	
6,427,068	B1 *	7/2002	Suominen	455/302
6,449,244	B1 *	9/2002	Loseke	370/208
6,477,196	B1	11/2002	Swanke et al.	375/147
6,486,809	B1	11/2002	Figoli	
6,507,298	B1	1/2003	Barrenscheen et al.	
6,509,934	B1	1/2003	Bao et al.	348/570
6,512,472	B1	1/2003	Smith et al.	341/155
6,545,728	B1 *	4/2003	Patel et al.	348/725
6,549,774	B1	4/2003	Titlebaum et al.	455/427
6,567,654	B1	5/2003	Coronel Arredondo et al.	455/315
6,621,433	B1	9/2003	Hertz	
6,622,007	B2	9/2003	Linden	455/12.1
6,625,464	B1	9/2003	Bandy et al.	455/503
6,631,255	B1	10/2003	Claxton et al.	455/203
6,677,893	B2 *	1/2004	Rideout et al.	342/353
6,765,535	B1	7/2004	Brown et al.	343/700 MS
6,801,567	B1 *	10/2004	Schmidl et al.	375/149
6,876,839	B2	4/2005	Harris	455/141
6,888,580	B2	5/2005	Dujmenovic	348/731
6,912,378	B2	6/2005	Morewitz, II et al.	455/150.1
2003/0054783	A1	3/2003	Mason et al.	455/150.1

OTHER PUBLICATIONS

Copending U.S. Appl. No. 10/412,962, filed Apr. 14, 2003, "Multi-Stage Channel Select Filter and Associated Method".

Copending U.S. Appl. No. 10/412,871, filed Apr. 14, 2003, "Integrated Multi-Tuner Satellite Receiver Architecture and Associated Method".

Brett, et al., "*A Direct-Conversion L-Band Tuner for Digital DBS*," ISSCC 98/Session 8/Wireless Receivers/Paper FA 8.3, IEEE International Solid-State Circuits Conference (1998).

Jayaraman, et al., "*A Fully Integrated Broadband Direct-Conversion Receiver for DBS Applications*," ISSCC 2000/Session 8/Wireless RX/TX/Paper TA 8.2, IEEE International Solid-State Circuits Conference (2000).

Conexant Data Sheet No. 100584A, "*CX24108 Digital Satellite Tuner*," Nov. 2000.

Vaucher, et al., "*A Wide-Band Tuning System for Fully Integrated Satellite Receivers*," IEEE Journal of Solid-State Circuits, vol. 33, No. 7, Jul. 1998.

PCT International Search Report, PCT/US04/10765.

* cited by examiner

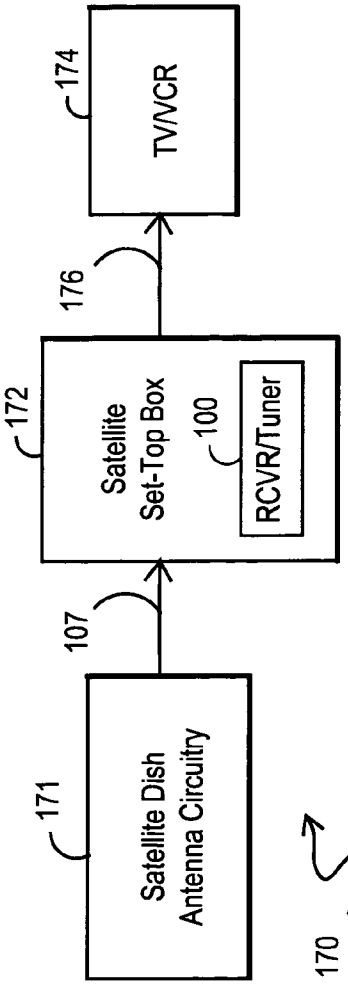
Satellite Dish Antenna Circuitry
171
107
Satellite Set-Top Box
172
100
RCVR/Tuner
176
TV/VCR
174
170

FIG. 1A

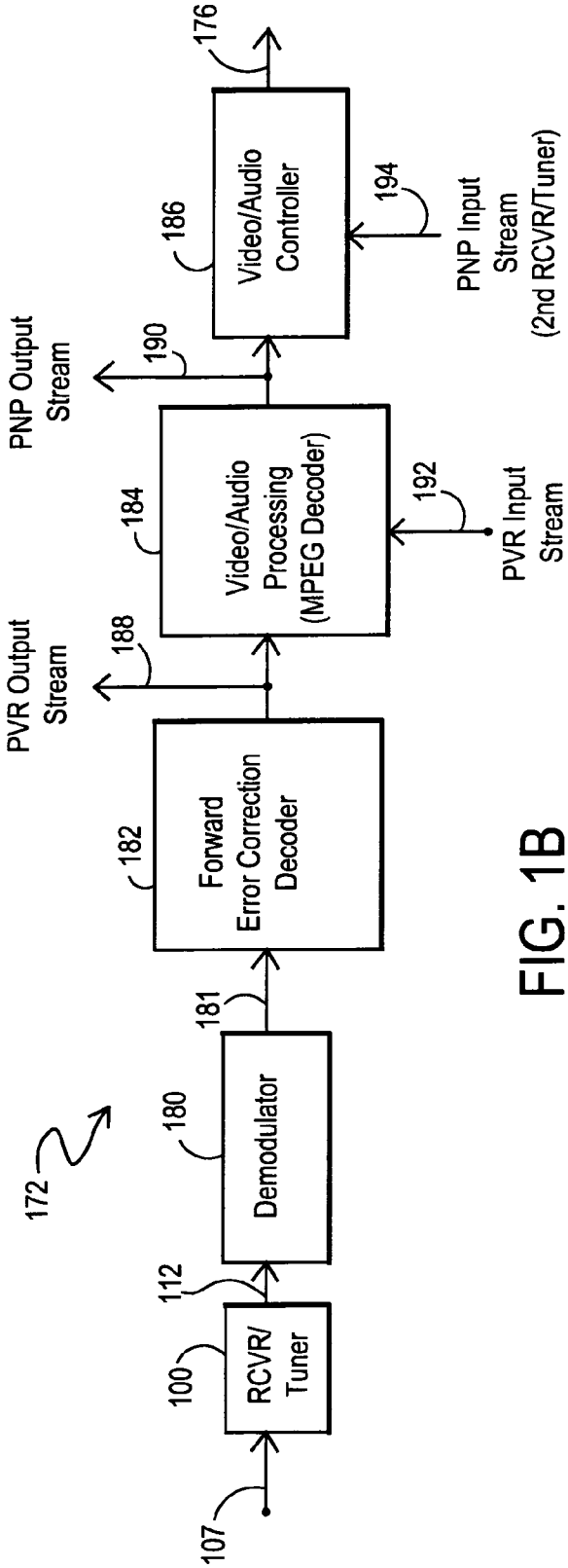
107
RCVR/ Tuner
100
112
Demodulator
180
181
Forward Error Correction Decoder
182
PVR Output Stream
188
Video/Audio Processing (MPEG Decoder)
184
PVR Input Stream
192
PNP Output Stream
190
Video/Audio Controller
186
PNP Input Stream (2nd RCVR/Tuner)
194
176
172

FIG. 1B

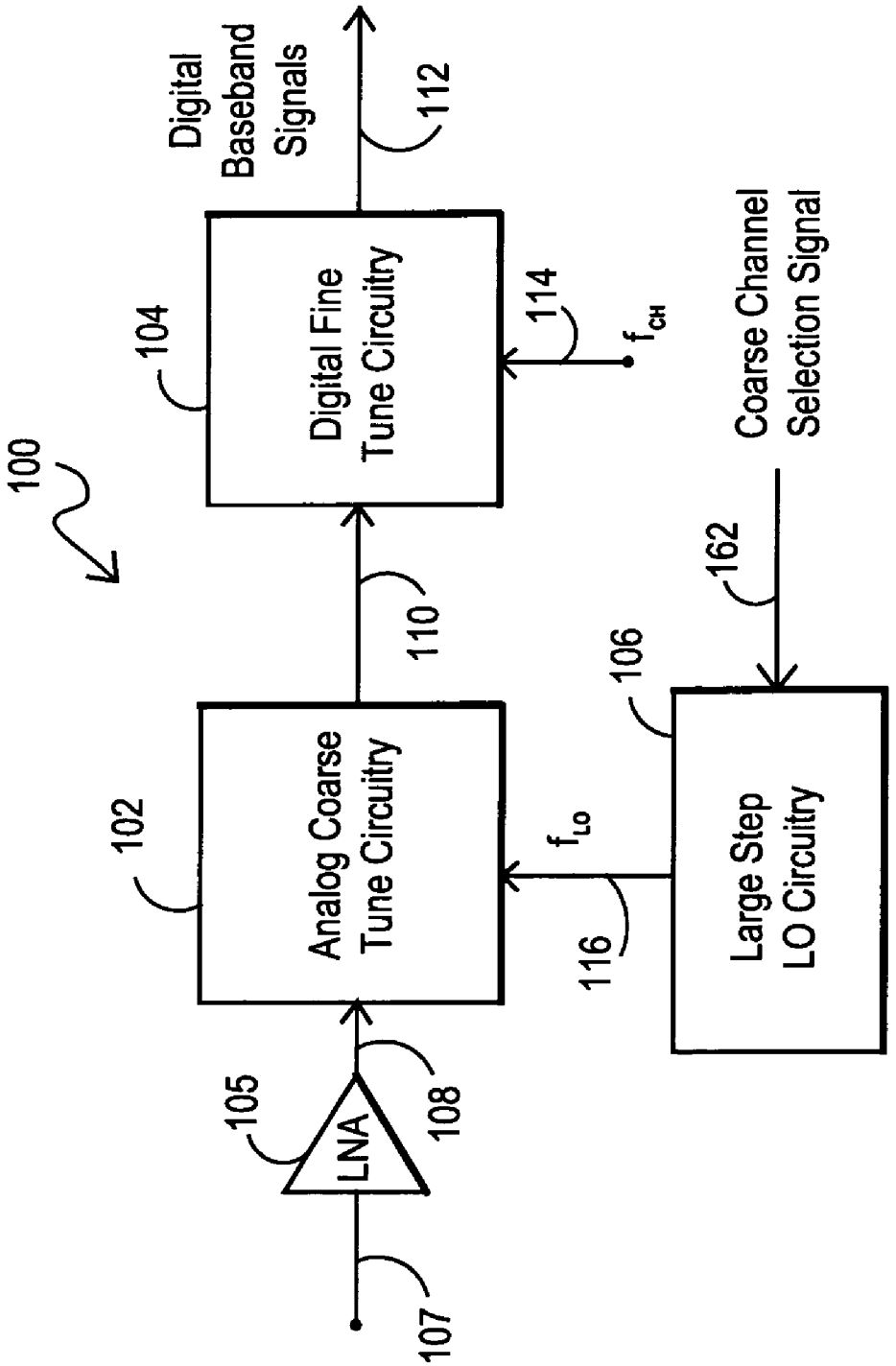
100
Digital Baseband Signals
112
104
Digital Fine Tune Circuitry
114
f_{CH}
Coarse Channel Selection Signal
162
110
106
102
Analog Coarse Tune Circuitry
f_{LO}
116
Large Step LO Circuitry
105
LNA
108
107

FIG. 1C

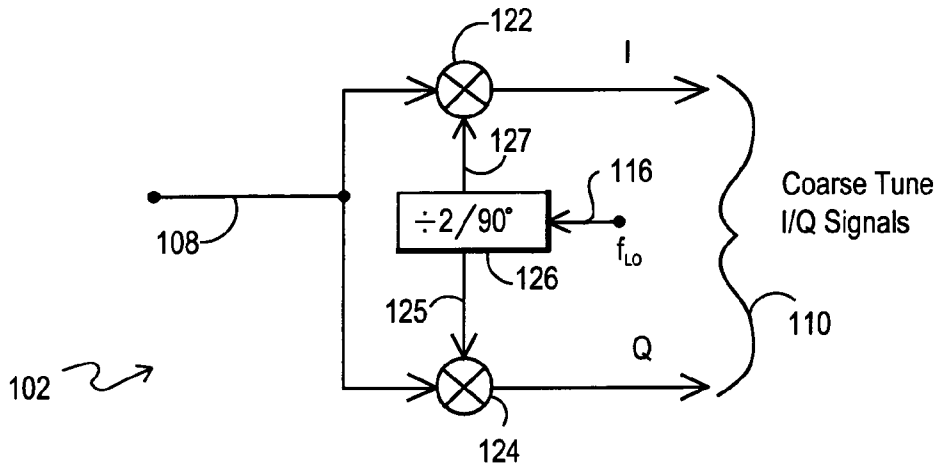
122
I
127
116
÷2/90°
f_{LO}
Coarse Tune
I/Q Signals
108
126
125
110
Q
102
124

FIG. 1D

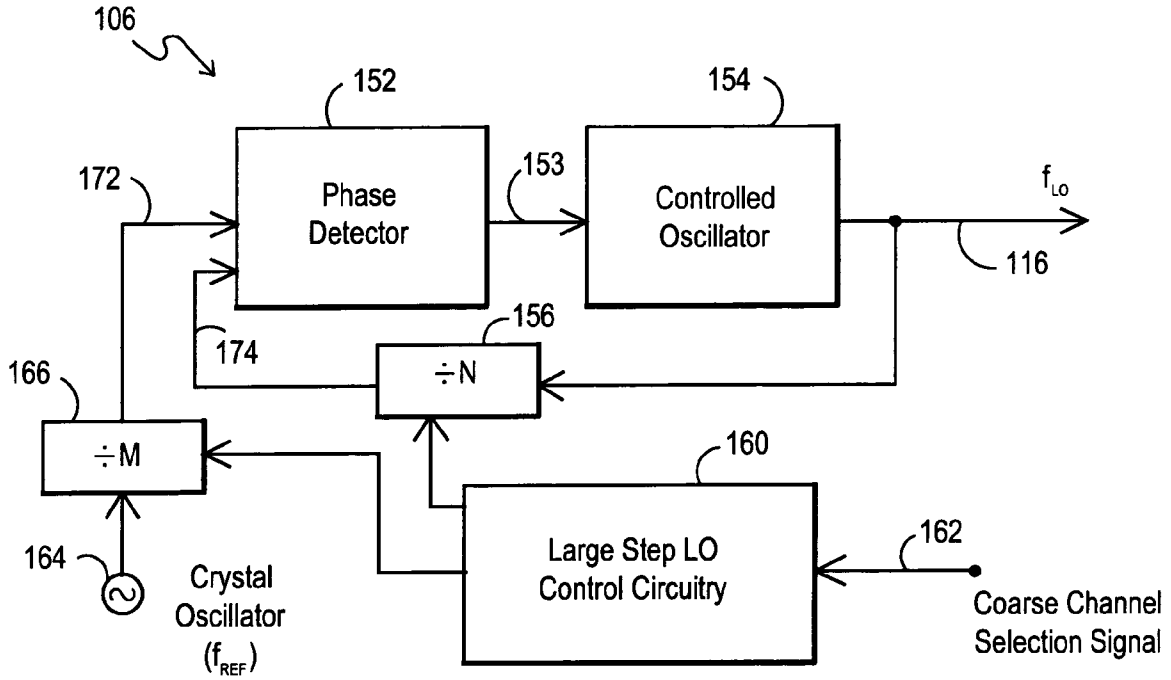
106
152
154
172
Phase
Detector
153
Controlled
Oscillator
f_{LO}
116
156
174
÷N
166
÷M
160
Large Step LO
Control Circuitry
162
164
Crystal
Oscillator
(f_{REF})
Coarse Channel
Selection Signal

FIG. 1E

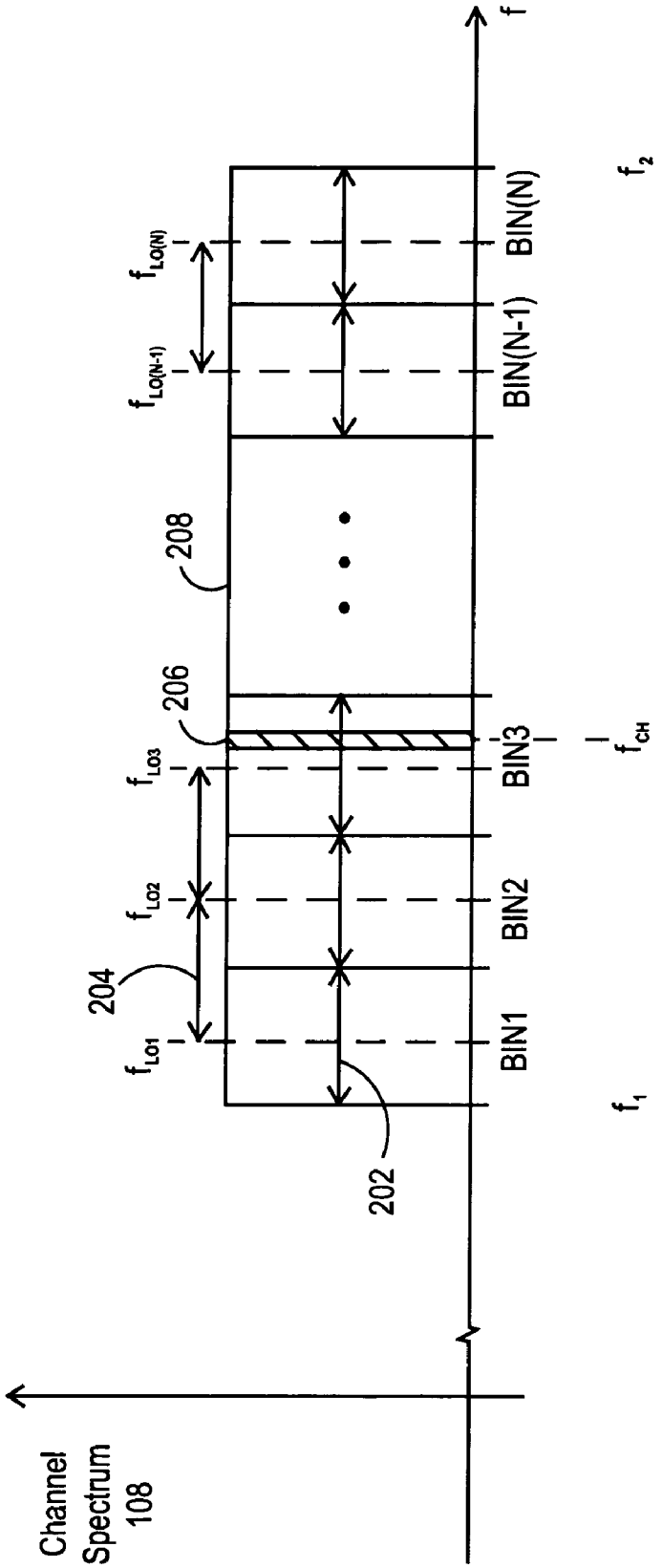
Channel Spectrum 108
f
f_1
f_2
f_{CH}
f_{LO1}
f_{LO2}
f_{LO3}
$f_{LO(N-1)}$
$f_{LO(N)}$
BIN1
BIN2
BIN3
BIN(N-1)
BIN(N)
202
204
206
208

FIG. 2A

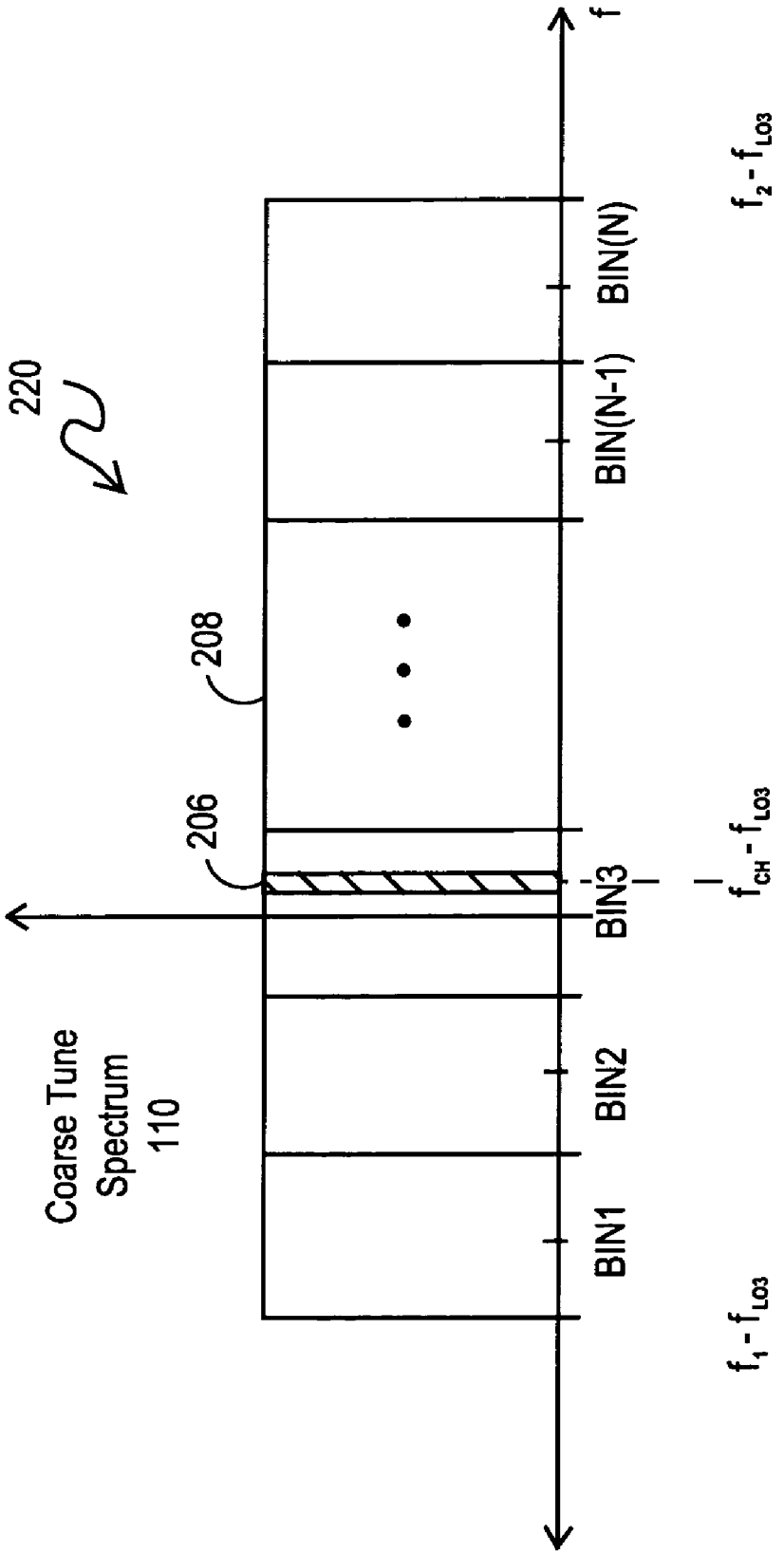
220
Coarse Tune Spectrum 110
206
208
BIN1
BIN2
BIN3
BIN(N-1)
BIN(N)
f
$f_1 - f_{LO3}$
$f_{CH} - f_{LO3}$
$f_2 - f_{LO3}$

FIG. 2B

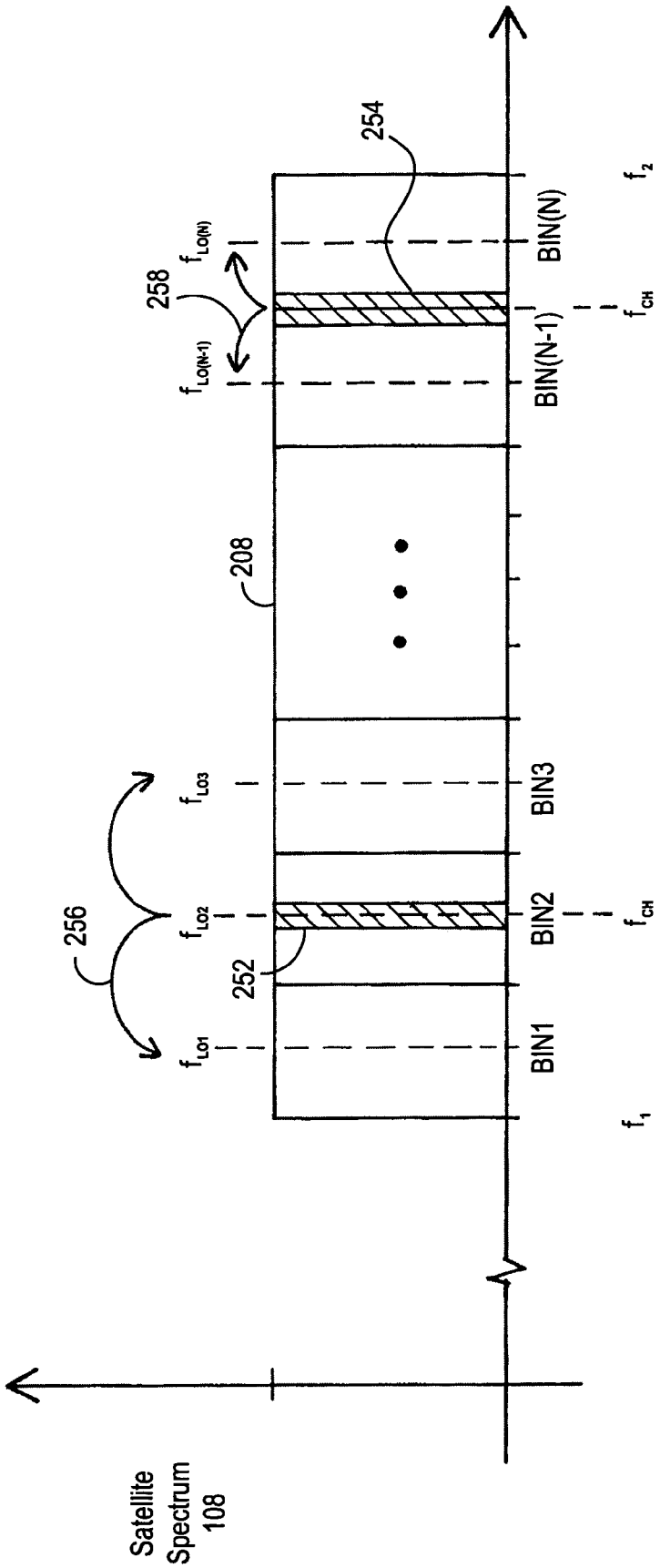
Satellite Spectrum 108
256
258
254
252
208
f_{LO1}
f_{LO2}
f_{LO3}
$f_{LO(N-1)}$
$f_{LO(N)}$
BIN1
BIN2
BIN3
BIN(N-1)
BIN(N)
f_1
f_{CH}
f_{CH}
f_2

FIG. 2C

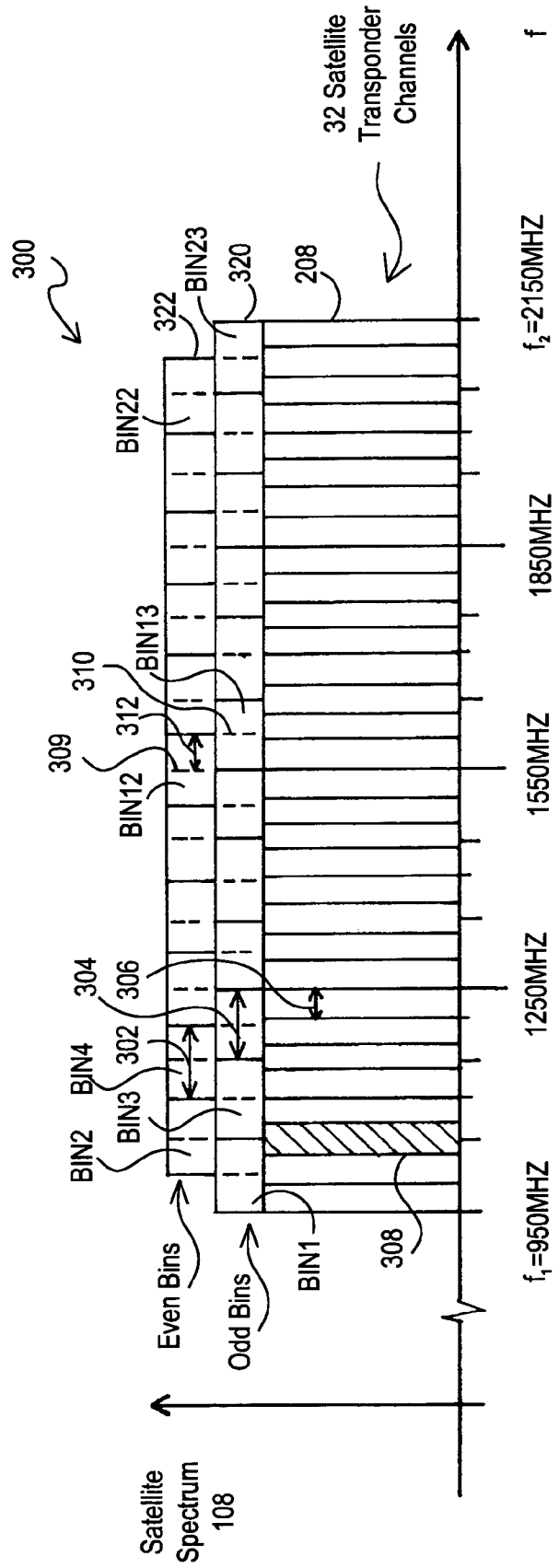
300
Satellite Spectrum 108
Even Bins
Odd Bins
BIN1
BIN2
BIN3
BIN4
BIN12
BIN13
BIN22
BIN23
302
304
306
308
309
310
312
320
322
208
32 Satellite Transponder Channels
f
f_1=950MHZ
1250MHZ
1550MHZ
1850MHZ
f_2=2150MHZ

FIG. 3

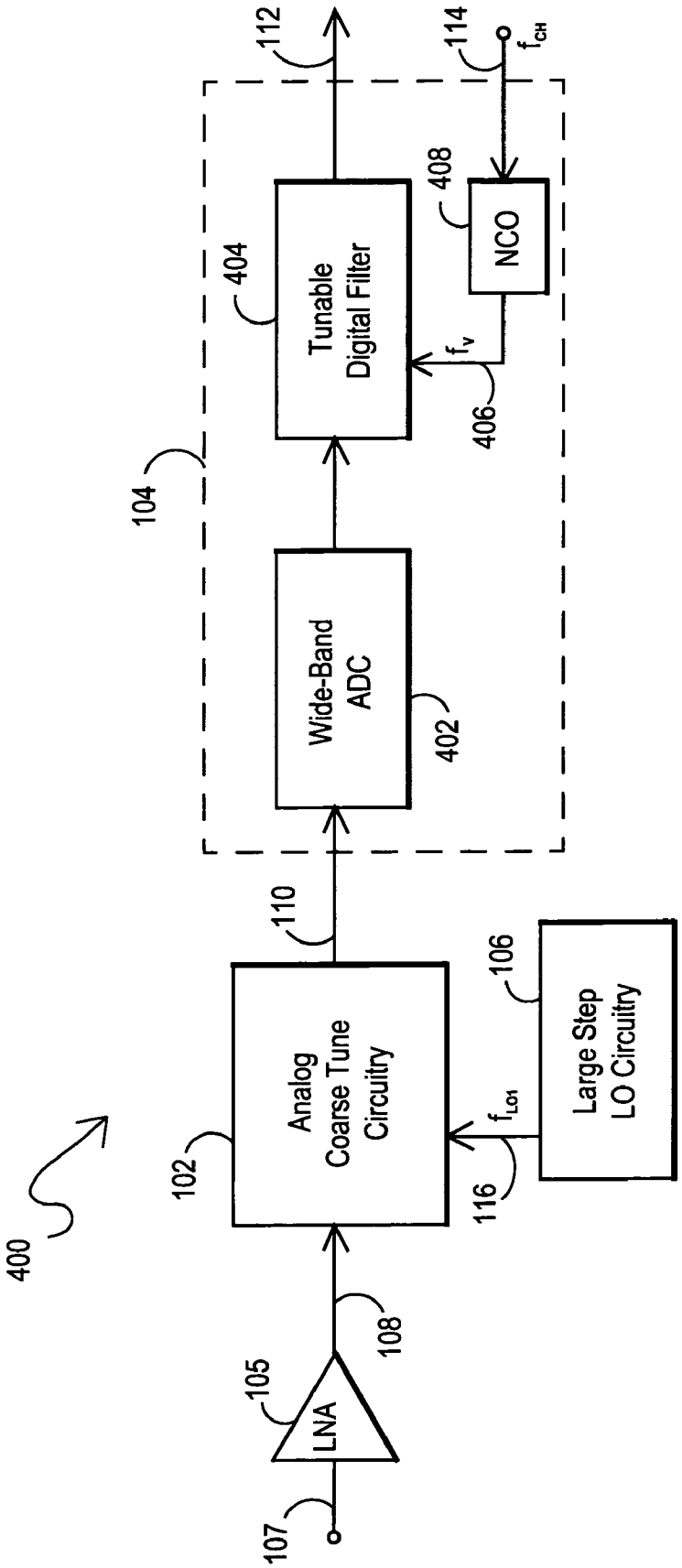
400
107
105
LNA
108
102
Analog
Coarse Tune
Circuitry
110
104
Wide-Band
ADC
402
Tunable
Digital Filter
404
112
f_{LO1}
116
Large Step
LO Circuitry
106
f_v
406
NCO
408
114
f_{CH}

FIG. 4A

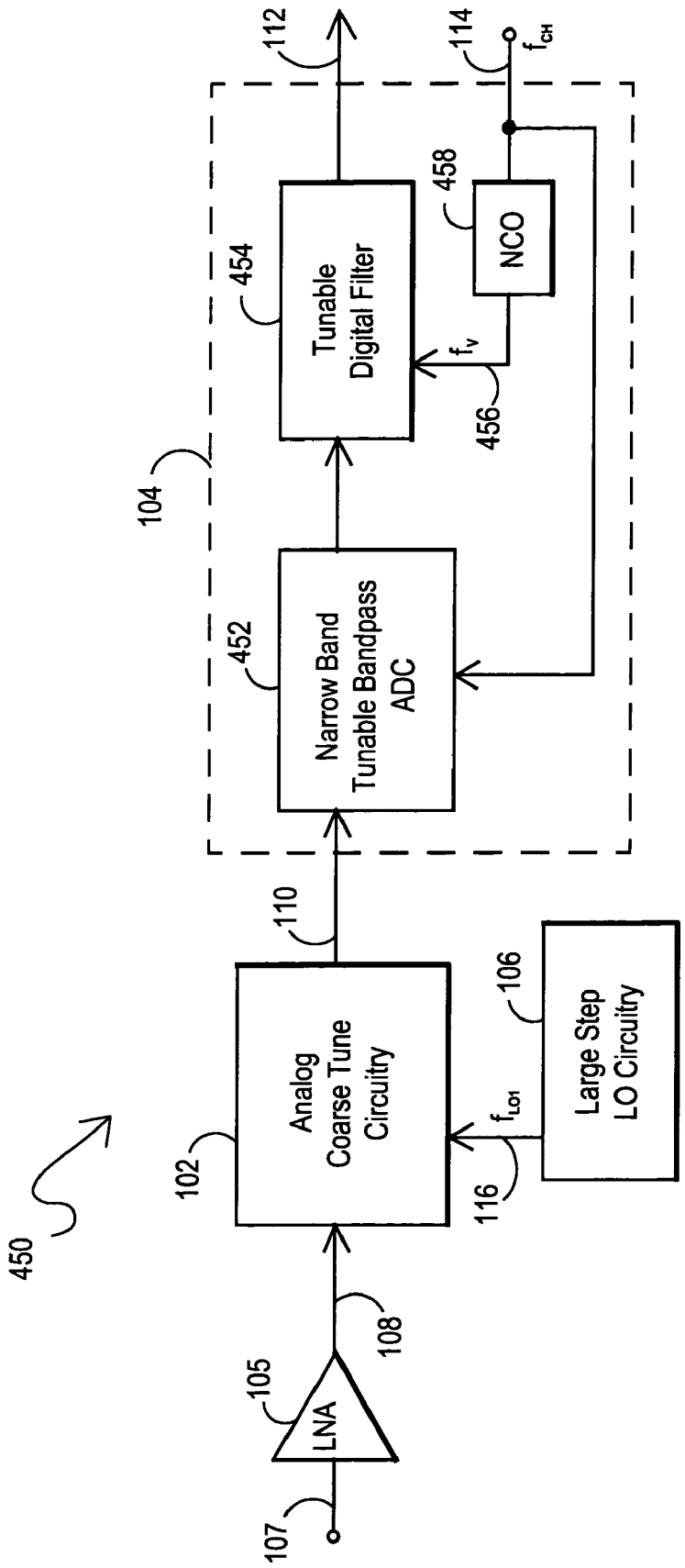
450
107
105
LNA
108
102
Analog
Coarse Tune
Circuitry
110
104
452
Narrow Band
Tunable Bandpass
ADC
454
Tunable
Digital Filter
112
116
f_{LO1}
106
Large Step
LO Circuitry
456
f_v
458
NCO
114
f_{CH}

FIG. 4B

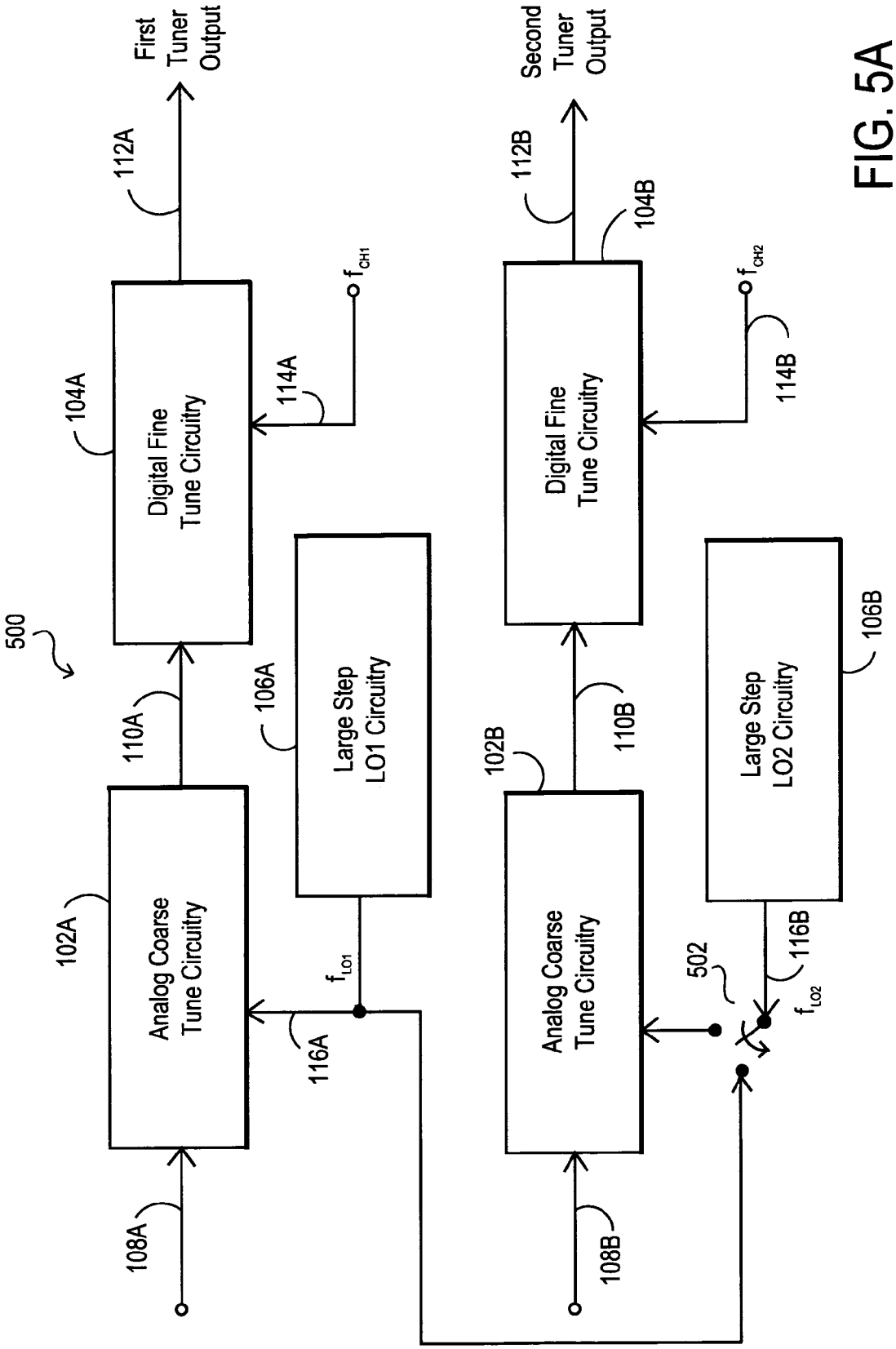
500
First Tuner Output
112A
104A
Digital Fine Tune Circuitry
114A
f_{CH1}
110A
102A
Analog Coarse Tune Circuitry
108A
106A
Large Step LO1 Circuitry
f_{LO1}
116A
Second Tuner Output
112B
104B
Digital Fine Tune Circuitry
114B
f_{CH2}
110B
102B
Analog Coarse Tune Circuitry
108B
106B
Large Step LO2 Circuitry
116B
f_{LO2}
502

FIG. 5A

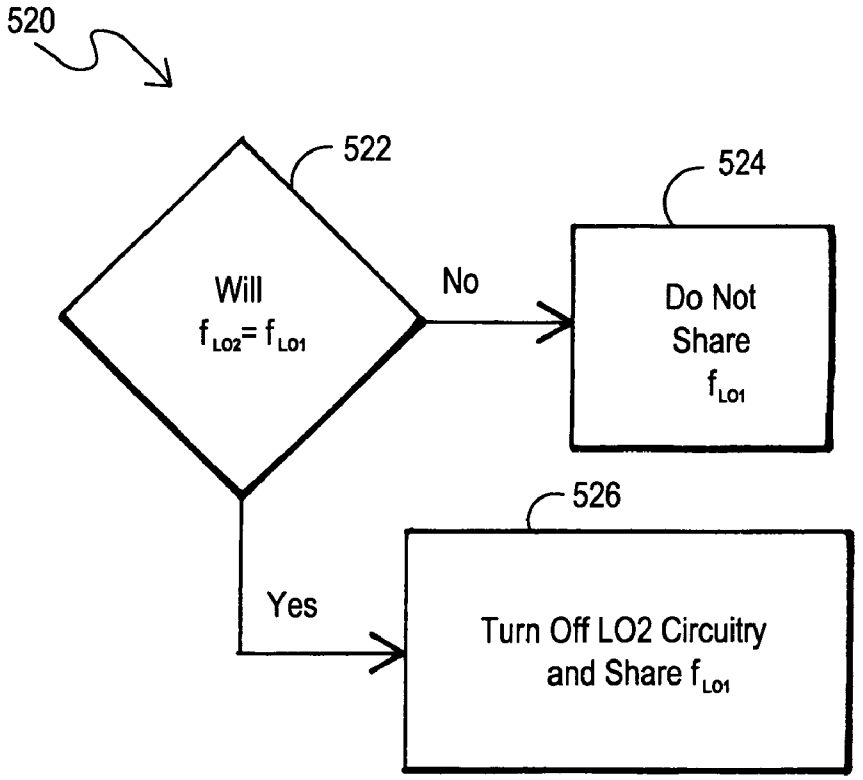
520
522
Will
$f_{LO2} = f_{LO1}$
No
524
Do Not
Share
f_{LO1}
526
Yes
Turn Off LO2 Circuitry
and Share f_{LO1}

FIG. 5B

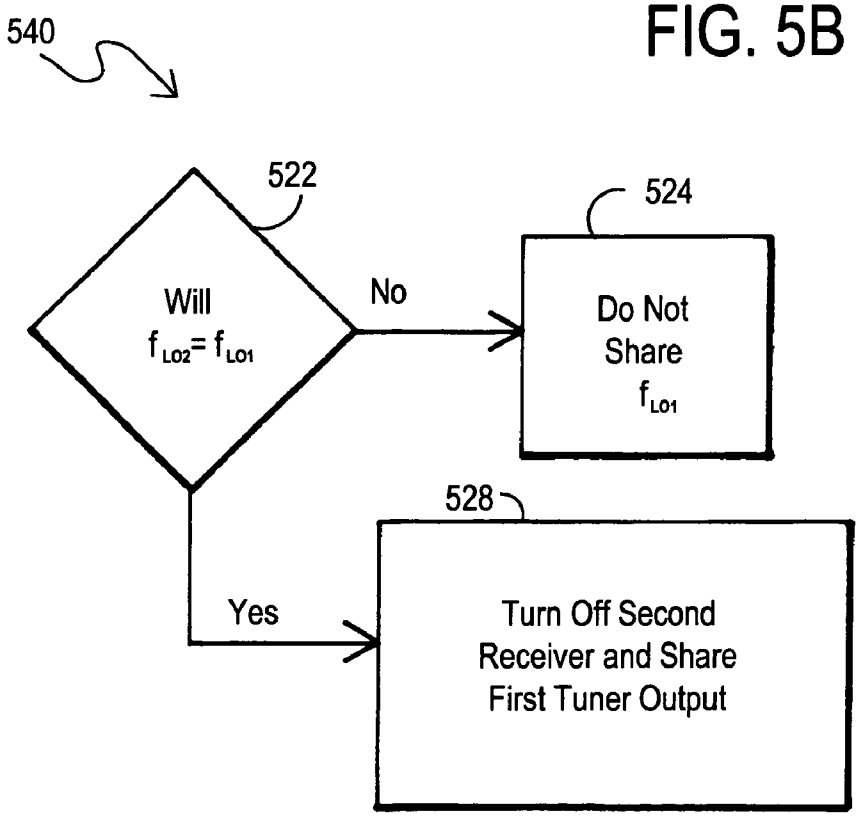
540
522
Will
$f_{LO2} = f_{LO1}$
No
524
Do Not
Share
f_{LO1}
528
Yes
Turn Off Second
Receiver and Share
First Tuner Output

FIG. 5C

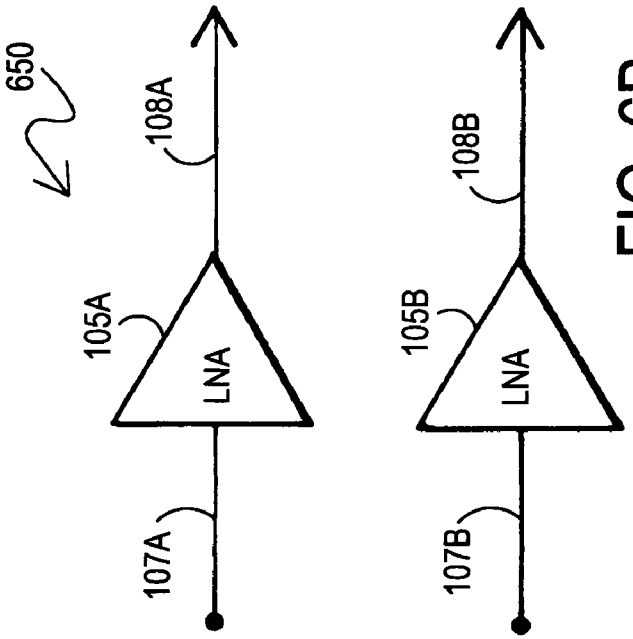
650
107A
105A
LNA
108A
107B
105B
LNA
108B

FIG. 6B

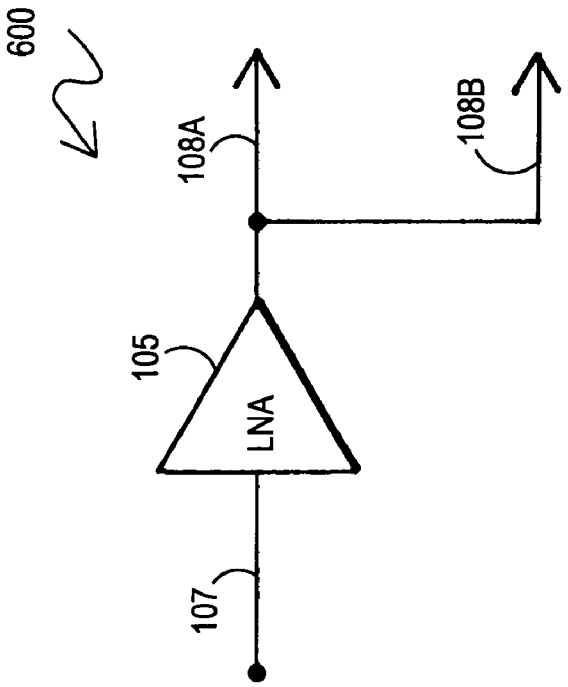
600
107
105
LNA
108A
108B

FIG. 6A

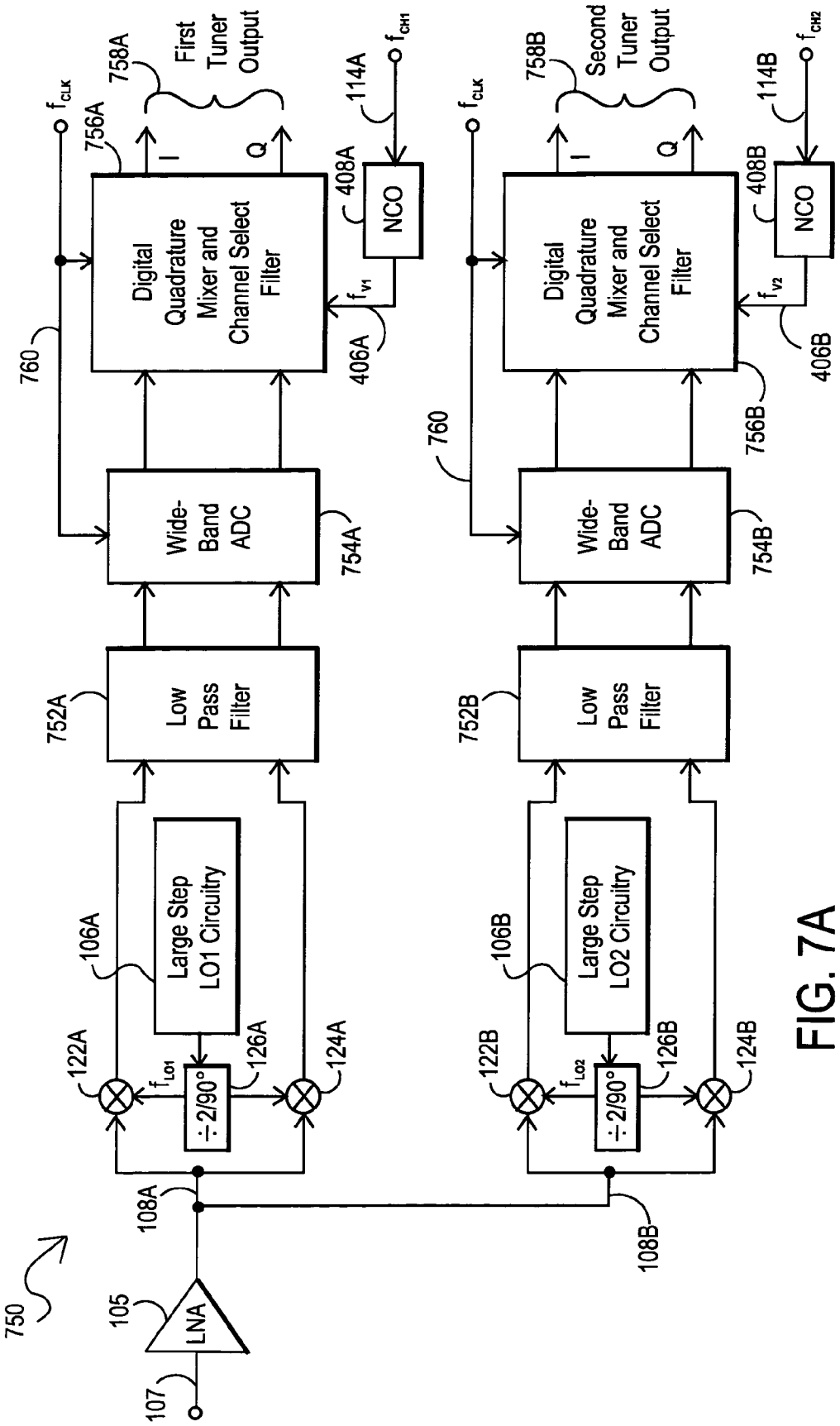
750
107
105
LNA
108A
108B
122A
122B
106A
106B
Large Step LO1 Circuitry
Large Step LO2 Circuitry
÷ 2/90°
126A
126B
124A
124B
752A
752B
Low Pass Filter
754A
754B
Wide-Band ADC
760
756A
756B
Digital Quadrature Mixer and Channel Select Filter
I
Q
758A
758B
First Tuner Output
Second Tuner Output
408A
408B
NCO
114A
114B
406A
406B

FIG. 7A

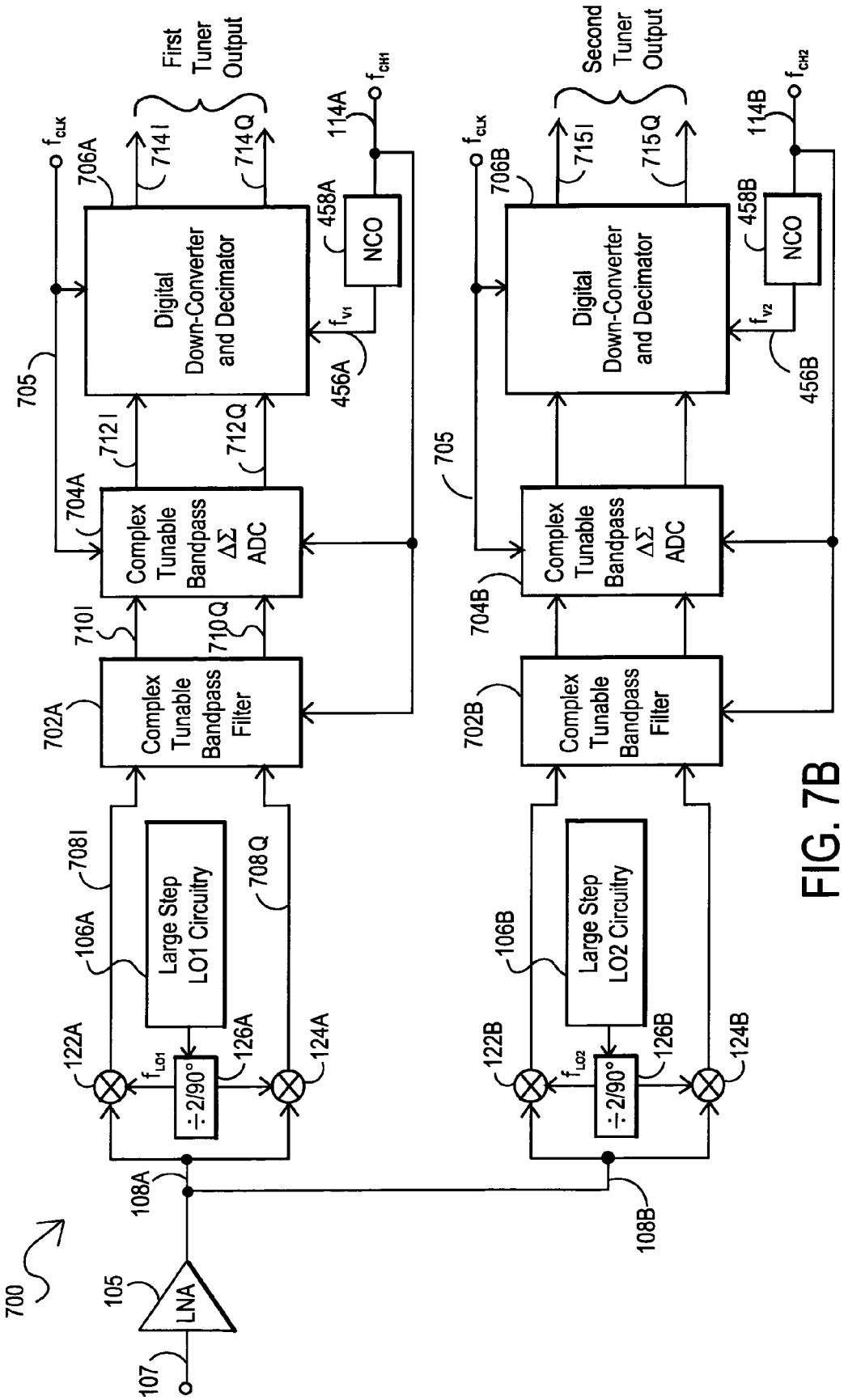
700
107
105
LNA
108A
108B
122A
122B
124A
124B
126A
126B
÷2/90°
106A
106B
Large Step LO1 Circuitry
Large Step LO2 Circuitry
708I
708Q
702A
702B
Complex Tunable Bandpass Filter
710I
710Q
704A
704B
Complex Tunable Bandpass ΔΣ ADC
712I
712Q
705
706A
706B
Digital Down-Converter and Decimator
714I
714Q
715I
715Q
First Tuner Output
Second Tuner Output
456A
456B
458A
458B
NCO
114A
114B

FIG. 7B

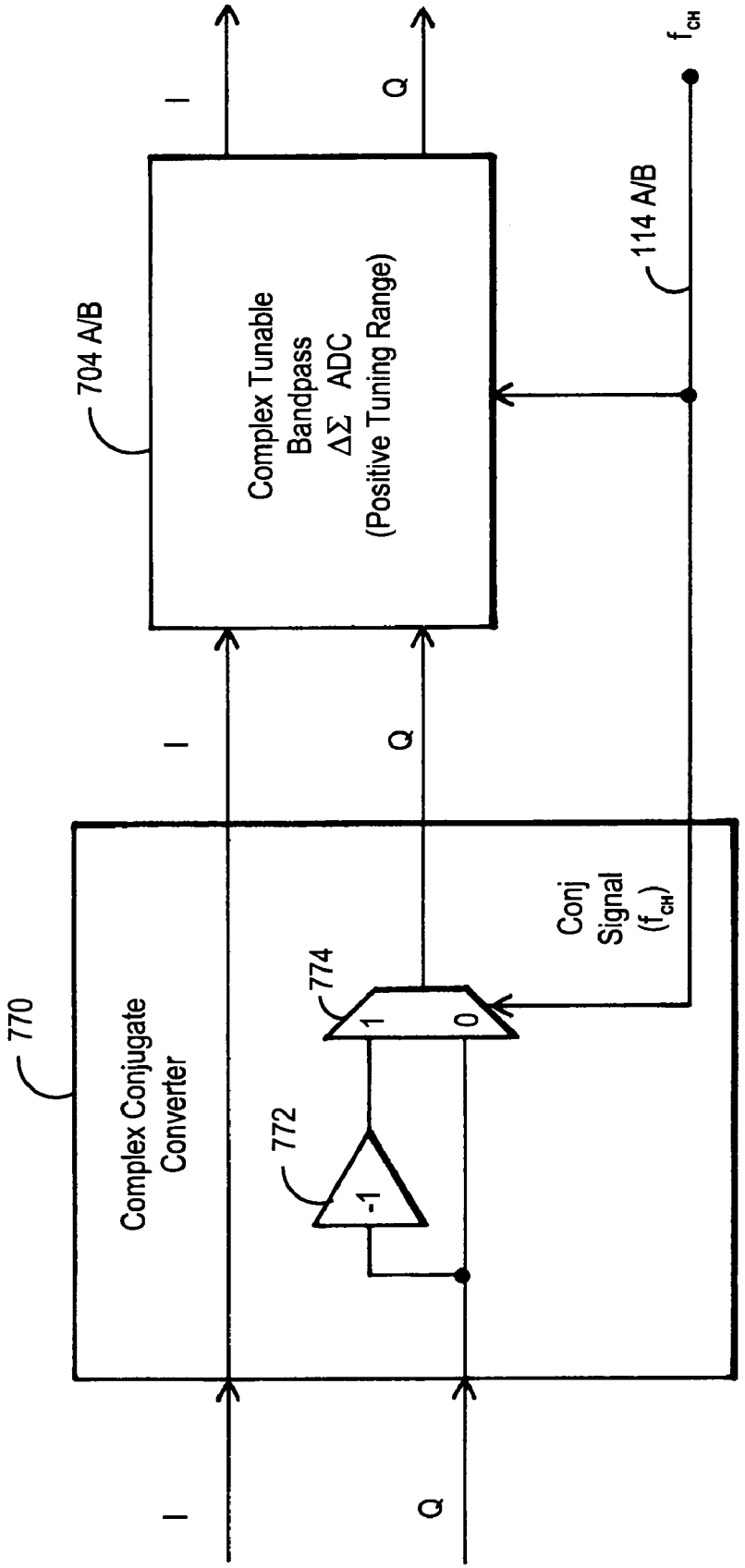
704 A/B
Complex Tunable
Bandpass
ΔΣ ADC
(Positive Tuning Range)
I
Q
114 A/B
f_{CH}
770
Complex Conjugate
Converter
772
-1
774
1
0
Conj
Signal
(f_{CH})
I
Q
I
Q

FIG. 7C

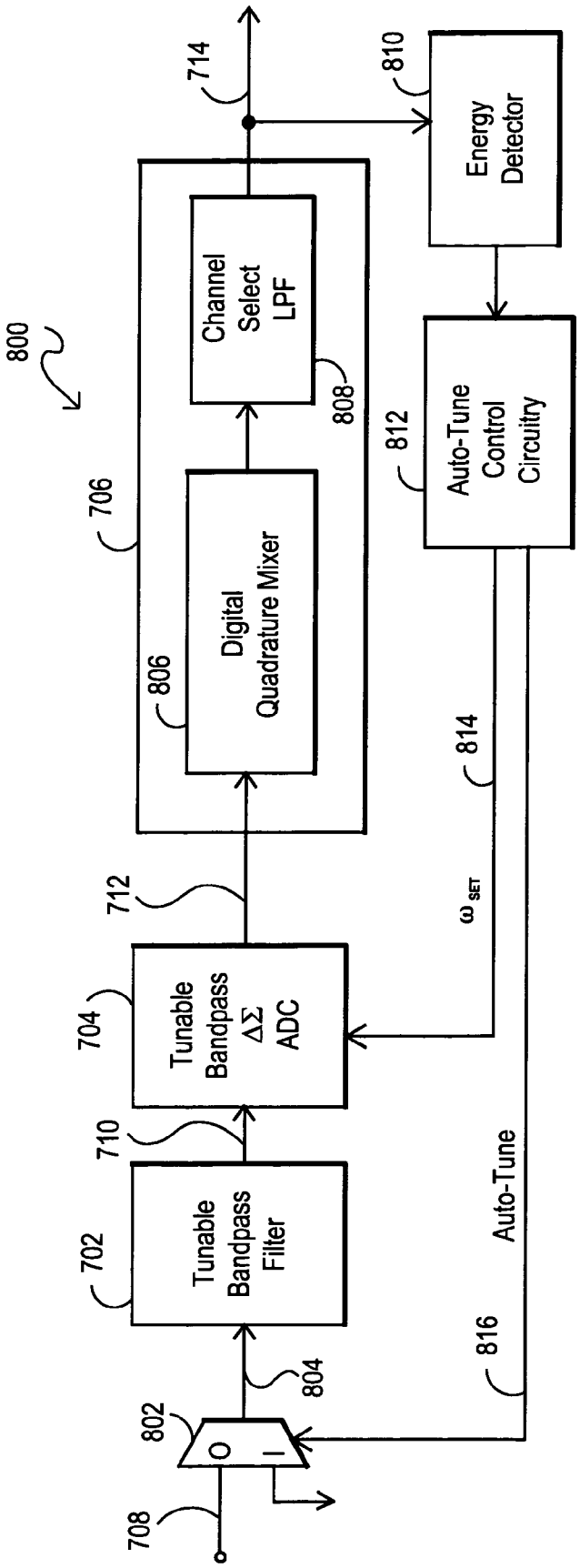
800
714
810
Energy Detector
Channel Select LPF
808
706
Digital Quadrature Mixer
806
812
Auto-Tune Control Circuitry
814
712
ω_{SET}
704
Tunable Bandpass ΔΣ ADC
710
702
Tunable Bandpass Filter
Auto-Tune
816
804
802
708

FIG. 8A

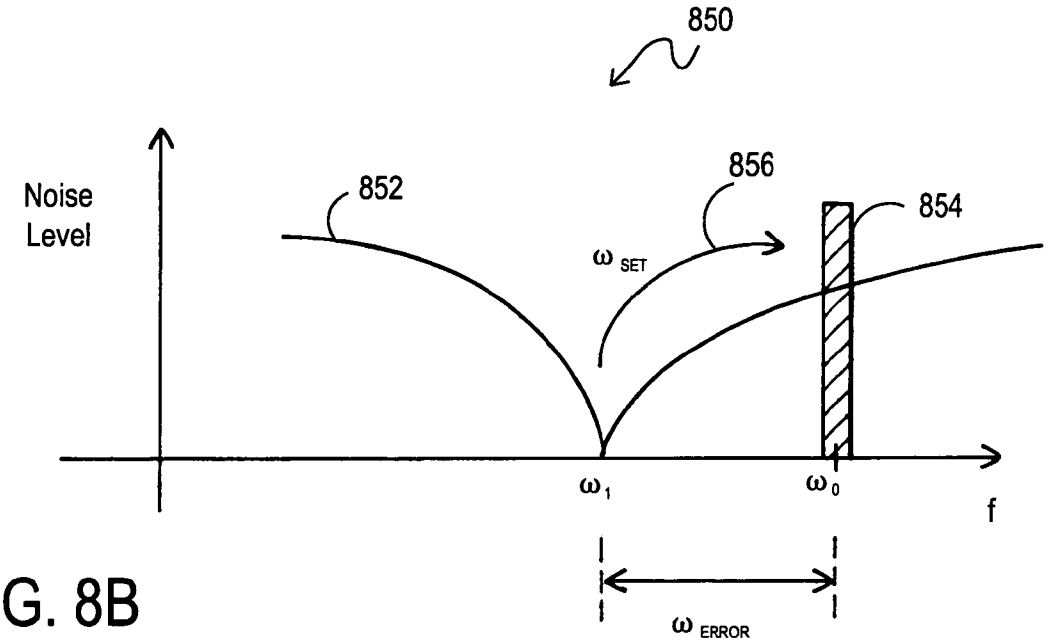
850
Noise Level
852
856
854
ω SET
ω 1
ω 0
f
ω ERROR

FIG. 8B

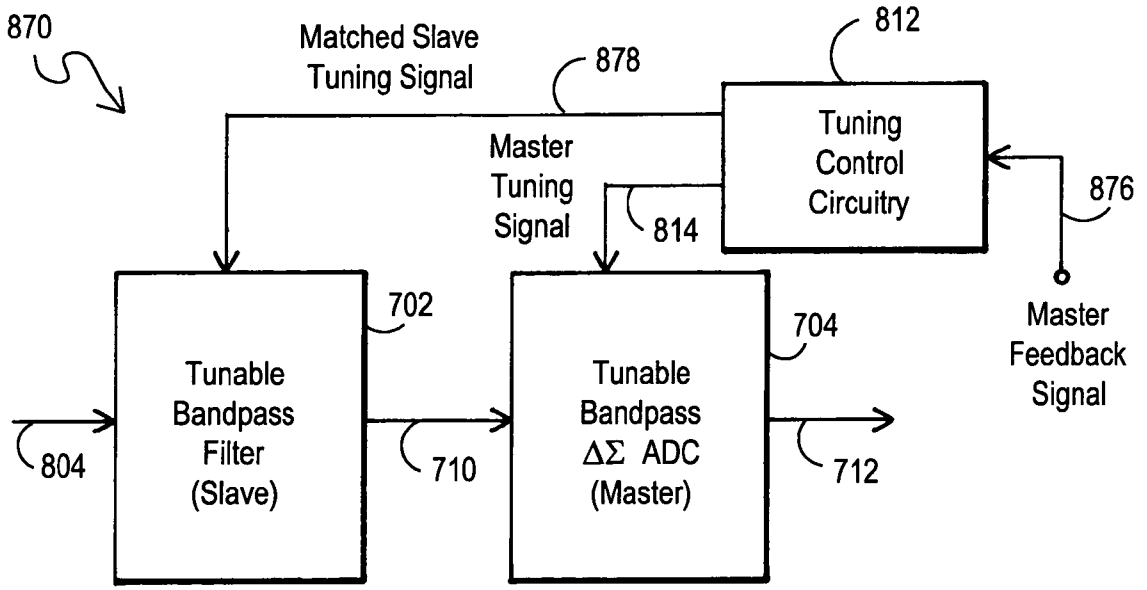
870
Matched Slave Tuning Signal
878
812
Tuning Control Circuitry
Master Tuning Signal
814
876
Master Feedback Signal
702
Tunable Bandpass Filter (Slave)
704
Tunable Bandpass ΔΣ ADC (Master)
804
710
712

FIG. 8C

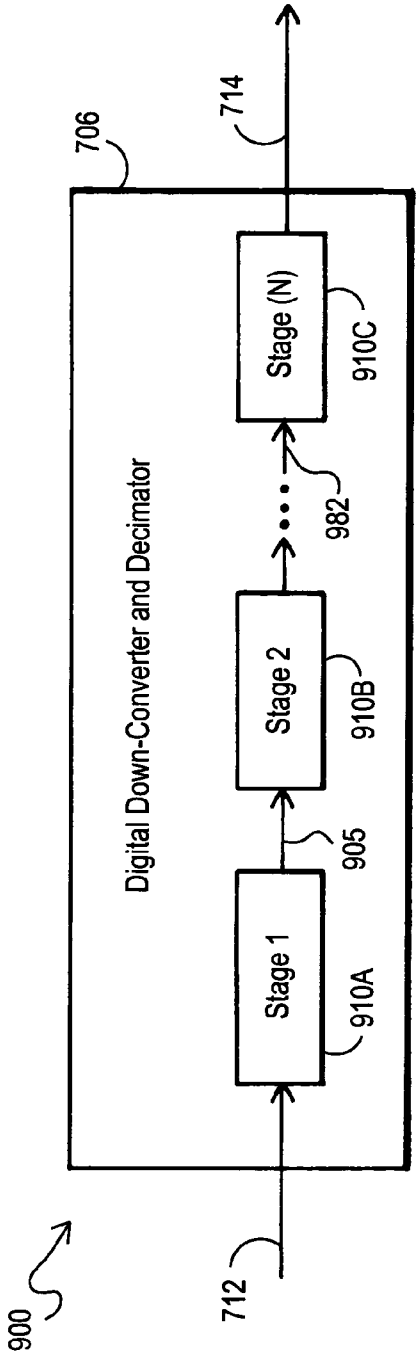
900
712
706
714
Digital Down-Converter and Decimator
Stage 1
910A
905
Stage 2
910B
982
Stage (N)
910C

FIG. 9A

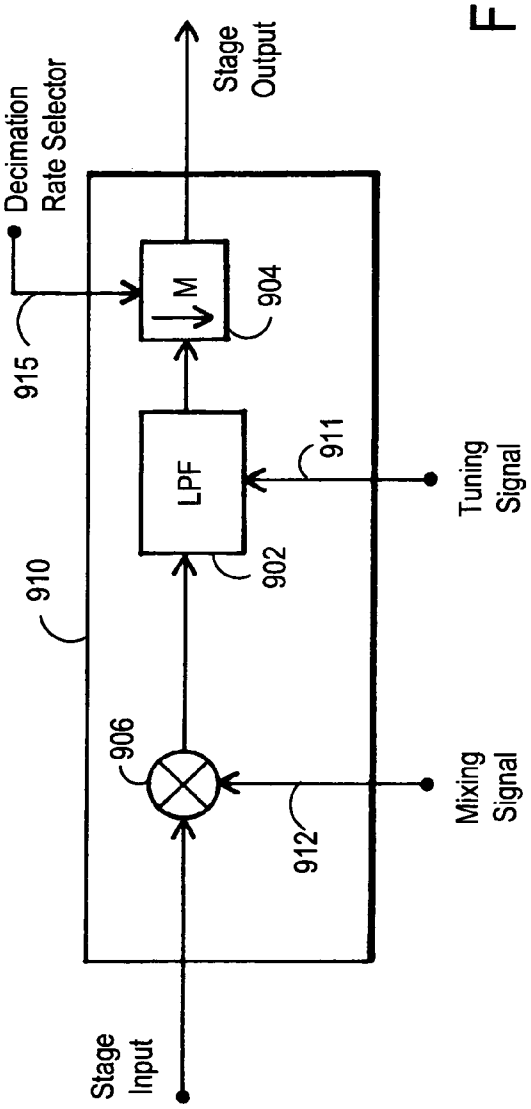
Stage Input
910
906
912
Mixing Signal
LPF
902
911
Tuning Signal
915
Decimation Rate Selector
M
904
Stage Output

FIG. 9B

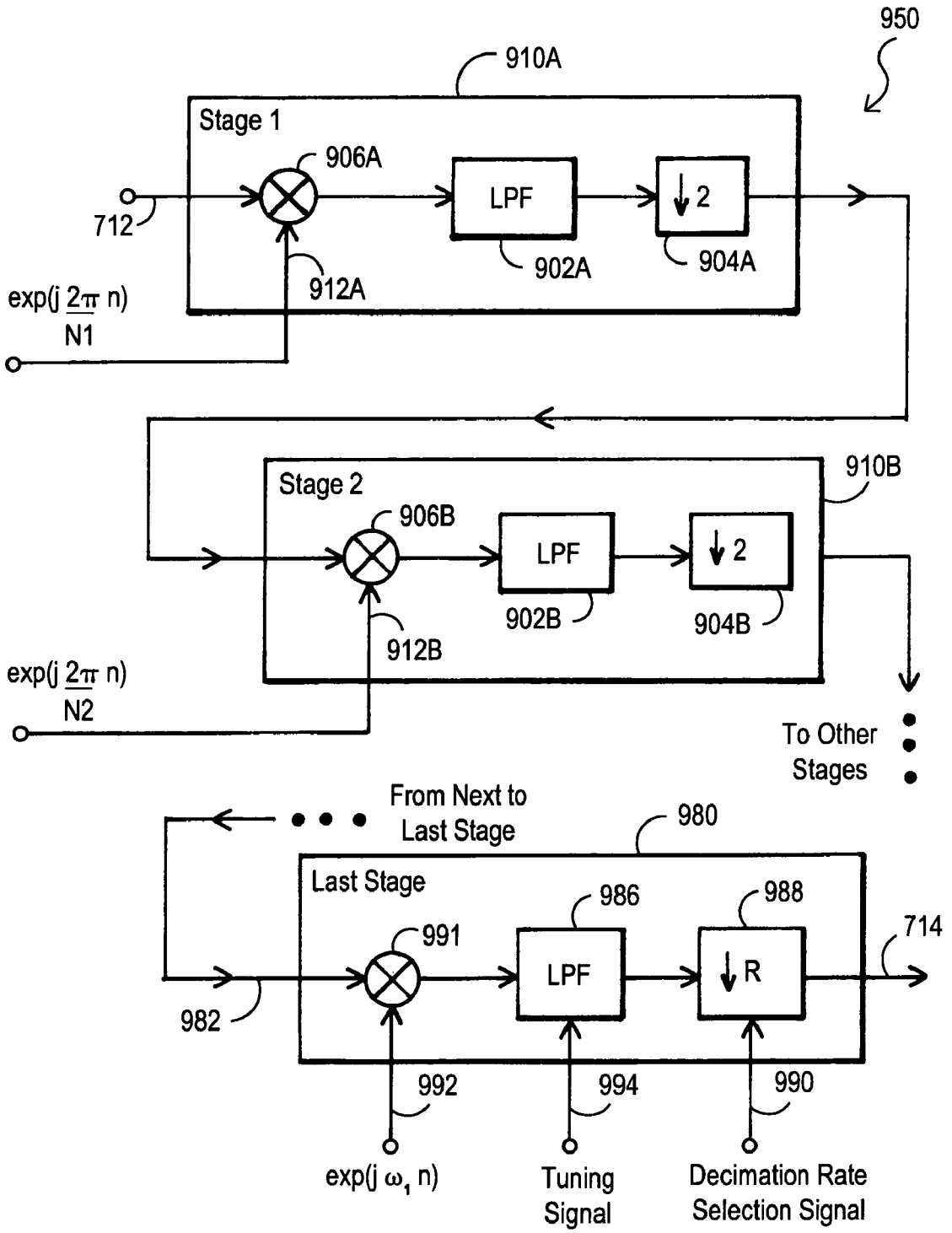
950
910A
Stage 1
906A
712
LPF
↓2
902A
904A
912A
exp(j 2π n)
N1
Stage 2
910B
906B
LPF
↓2
902B
904B
912B
exp(j 2π n)
N2
To Other
Stages
From Next to
Last Stage
980
Last Stage
986
988
991
714
LPF
↓R
982
992
994
990
exp(j ω1 n)
Tuning
Signal
Decimation Rate
Selection Signal

FIG. 9C

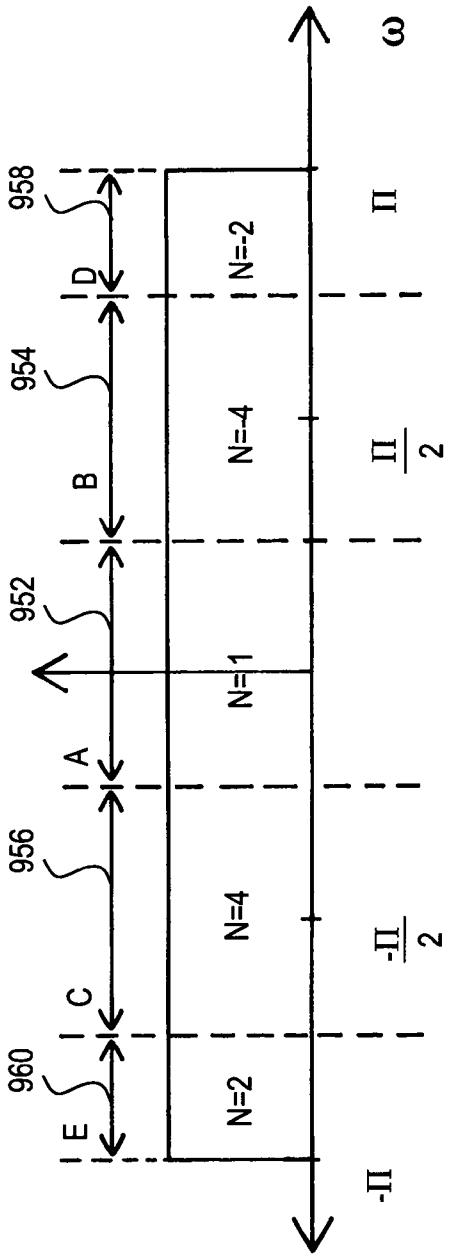
960
956
952
954
958
E
C
A
B
D
N=2
N=4
N=1
N=4
N=-2
-Π
-Π/2
Π/2
Π
ω

FIG. 9D

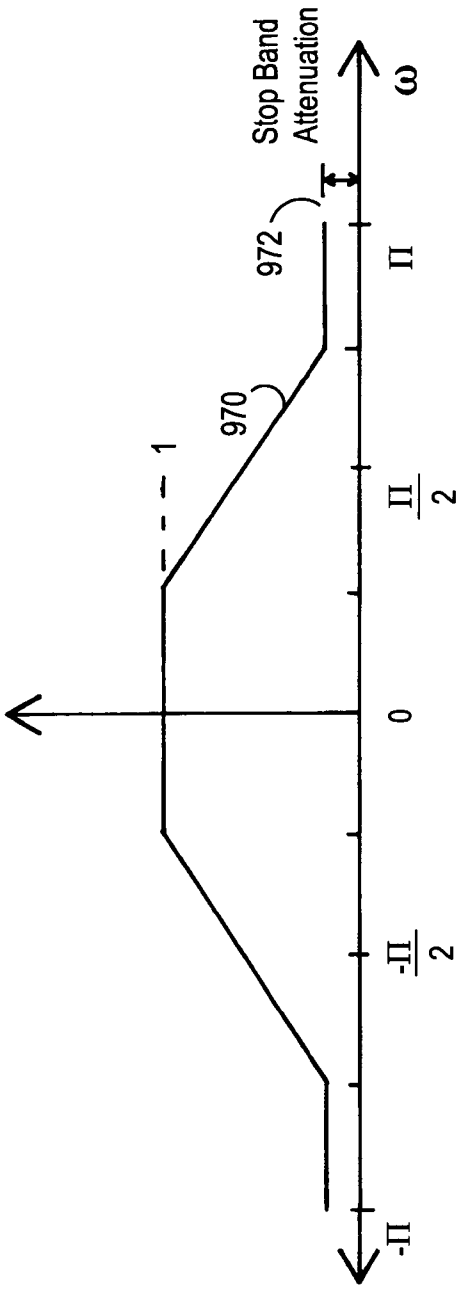
Stop Band Attenuation
972
970
1
-Π
-Π/2
0
Π/2
Π
ω

FIG. 9E

RECEIVER ARCHITECTURES UTILIZING COARSE ANALOG TUNING AND ASSOCIATED METHODS

TECHNICAL FIELD OF THE INVENTION

This invention relates to receiver architectures for high frequency transmissions and more particularly to set-top box receiver architectures for satellite television communications.

BACKGROUND

In general, the most ideal receiver architecture for an integrated circuit from a bill-of-material point of view is usually a direct down conversion (DDC) architecture. However, in practice, there are several issues that often prohibit the practical design of integrated circuit implementations that use DDC architectures. These issues typically include noise from the DC offset voltage and 1/f noise from baseband circuitry located on the integrated circuit. In mobile applications, such as with cellular phones, the DC offset voltage is a time varying entity which makes its cancellation a very difficult task. In other applications where mobility is not a concern, such as with satellite receivers, the DC offset voltage can be stored and cancelled, such as through the use of external storage capacitors. However, 1/f noise is still an issue and often degrades CMOS satellite tuners that use a DDC architecture.

Conventional home satellite television systems utilize a fixed dish antenna to receive satellite communications. After receiving the satellite signal, the dish antenna circuitry sends a satellite spectrum signal to a satellite receiver or set-top box that is often located near a television through which the viewer desires to watch the satellite programming. This satellite receiver uses receive path circuitry to tune the program channel that was selected by the user. Throughout the world, the satellite channel spectrum sent to the set-top box is often structured to include 32 transponder channels between 950 MHz and 2150 MHz with each transponder channel carrying a number of different program channels. Each transponder will typically transmit multiple program channels that are time-multiplexed on one carrier signal. Alternatively, the multiple program channels may be frequency multiplexed within the output of each transponder. The total number of received program channels considering all the transponders together is typically well over 300 program channels.

Conventional architectures for set-top box satellite receivers include low intermediate-frequency (IF) architectures and DDC architectures. Low-IF architectures utilize two mixing frequencies. The first mixing frequency is designed to be a variable frequency that is used to mix the selected satellite transponder channel to a pre-selected IF frequency that is close to DC. And the second mixing frequency is designed to be the low-IF frequency that is used to mix the satellite spectrum to DC. Direct down conversion (DDC) architectures utilize a single mixing frequency. This mixing frequency is designed to be a variable frequency that is used to mix the selected satellite transponder channel directly to DC.

As indicated above, DDC architectures are desirable due to the efficiencies they provide. DDC architectures, however, suffer from disadvantages such as susceptibility to DC noise, 1/f noise and I/Q path imbalances. DDC architectures also often require narrow-band PLLs to provide mixing frequencies, and implementations of such narrow-band

PLLs typically utilize LC-based voltage controlled oscillators (VCOs). Low-IF architectures, like DDC architectures, also typically require the use of such narrow-band PLLs with LC-based VCOs. Such LC-based VCOs are often difficult to tune over wide frequency ranges and often are prone to magnetically pick up any magnetically radiated noise. In addition, interference problems arise because the center frequency for the selected transponder channel and the DDC mixing signal are typically at the same frequency or are very close in frequency. To solve this interference problem, some systems have implemented receivers where the DDC mixing frequency is double (or half) of what the required frequency is, and at the mixer input, a divider (or doubler) translates the DDC mixing signal into the wanted frequency. Furthermore, where two tuners are desired on the same integrated circuit, two DDC receivers, as well as two low-IF receivers, will have a tendency to interfere with each other, and their VCOs also have a tendency to inter-lock into one another, particularly where the selected transponder channels for each tuner are close together.

SUMMARY OF THE INVENTION

The present invention provides receiver architectures and associated methods that utilize coarse analog tune circuitry to provide initial analog coarse tuning of desired channels within a received spectrum signal, such as a set-top box signal spectrum for satellite communications. These architectures, as described in detail below, provide significant advantages over prior direct down-conversion (DDC) architectures and low intermediate-frequency (IF) architectures, particularly where two tuners are desired on the same integrated circuit. Rather than using a low-IF frequency or directly converting the desired channel frequency to DC, initial coarse tuning provided by analog coarse tuning circuitry allows for a conversion to a frequency range around DC. This coarse tuning circuitry can be implemented, for example, using a large-step local oscillator (LO) that provides a coarse tune analog mixing signal. Once mixed down, the desired channel may then be fine-tuned through digital processing, such as through the use of a wide-band analog-to-digital converter (ADC) or a narrow-band tunable band-pass ADC. The disclosed architectures, therefore, have the efficiency of using a single mixing frequency while still avoiding interference and noise problems that plague DDC architectures.

DESCRIPTION OF THE DRAWINGS

It is noted that the appended drawings illustrate only exemplary embodiments of the invention and are, therefore, not to be considered limiting of its scope, for the invention may admit to other equally effective embodiments.

FIG. **1**A is a block diagram for an example satellite set-top box environment within which the receiver architecture of the present invention could be utilized.

FIG. **1**B is a block diagram for example satellite set-top box circuitry that could include the receiver architecture of the present invention.

FIG. **1**C is a block diagram of basic receiver architecture according to the present invention utilizing a large-step local oscillator.

FIG. **1**D is a block diagram of an embodiment for coarse tune circuitry.

FIG. **1**E is a block diagram of an embodiment for a large-step local oscillator.

FIG. **2**A is a diagram for an example channel spectrum signal with predetermined frequency bins spanning the channel spectrum.

FIG. **2**B is a diagram for an example coarse tune signal spectrum.

FIG. **2**C is a diagram for an example satellite signal spectrum where desired channels overlap a bin local oscillator frequency or a bin-to-bin boundary.

FIG. **3** is a diagram of an embodiment for a overlapping bin architecture for an example 32 channel satellite signal spectrum for a television set-top box.

FIGS. **4**A and **4**B are example embodiments for the basic receiver architecture using a wide-band analog-to-digital converter and a narrow band tunable bandpass analog-to-digital converter, respectively.

FIG. **5**A is a block diagram for a two receiver architecture located on a single integrated circuit.

FIGS. **5**B and **5**C are flow diagrams of example embodiments for sharing a single local oscillator frequency between two receivers.

FIGS. **6**A and **6**B are block diagrams for example embodiments for providing satellite dish signals to satellite set-top box receivers.

FIG. **7**A is a block diagram for an dual receiver implementation of the receiver architecture of the present invention using wide-band analog-to-digital converters.

FIG. **7**B is a block diagram for an dual receiver implementation of the receiver architecture of the present invention using complex tunable bandpass delta-sigma analog-to-digital converters.

FIG. **7**C is a block diagram of an example embodiment for converting negative frequencies to reduce the needed tuning range of a complex tunable bandpass to positive frequencies.

FIGS. **8**A is a block diagram of an embodiment for adjusting tuning errors with respect to the complex tunable bandpass delta-sigma analog-to-digital converters in the embodiment of FIG. **7**B.

FIG. **8**B is a diagram representing the signal correction of FIG. **8**A.

FIG. **8**C is a block diagram for a master-slave tuning arrangement between a tunable bandpass analog-to-digital converter (master) and a tunable bandpass filter (slave).

FIG. **9**A is a block diagram of a multi-stage architecture for a digital down-converter and decimator usable in the embodiment of FIG. **7**B.

FIG. **9**B is a block diagram of example stages for the architecture of FIG. **9**A.

FIG. **9**C is a block diagram of example implementation of the architecture of FIG. **9**A utilizing a fixed decimation in the non-final stages and a variable decimation rate in the final stage.

FIG. **9**D is a diagram for determining a factor (N) used in the non-final stage implementations of FIG. **9**C.

FIG. **9**E is a response diagram of an example low pass filter for the non-final stage implementations of FIG. **9**C.

DETAILED DESCRIPTION OF THE INVENTION

The present invention provides receiver architectures and associated methods that coarse analog tune circuitry to provide initial analog coarse tuning of desired channels within a received signal spectrum. In the description of the present invention below, the signal spectrum is primarily described with respect to a satellite transponder channel spectrum; however, it is noted that the receiver architecture and methods of the present invention could be used with other channel signal spectrums utilized by other systems, if desired.

FIG. **1**A is a block diagram for an example satellite set-top box environment **170** within which the receiver or tuner architecture **100** of the present invention could be utilized. In the embodiment depicted, a satellite set-top box **172** receives an input signal spectrum from satellite dish antenna circuitry **171**. The satellite set-top box **172** processes this signal spectrum in part utilizing the receiver/tuner circuitry **100**. The output from the satellite set-top box **172** is then provided to a television, a videocassette recorder (VCR) or other device as represented by the TV/VCR block **174**.

FIG. **1**B is a block diagram for example circuitry for a satellite set-top box **172** that could include the receiver architecture **100** of the present invention. The input signal spectrum **107** can be, for example, 32 transponder channels between 950 MHz and 2150 MHz with each transponder channel carrying a number of different program channels. This signal spectrum **107** can be processed by the receiver/tuner **100** to provide digital baseband output signals **112** that represent a tuned transponder channel. These output signals **112** can then be processed by a demodulator **180** that can tune one of the program channels within the tuned transponder channel. The output signal **181** from the demodulator, which represents a tuned program channel within the transponder channel that was tuned by the receiver/tuner **100**, can then be processed with a forward error correction decoder **182** to produce a digital output stream. This digital output stream is typically the data stream that stored by personal video recorders (PVRs) for later use and viewing by a user as represented by the PVR output stream **188**. The output of the decoder **182**, or the stored PVR data as represented by PVR input stream **192**, can then be processed by video/audio processing circuitry **184** that can include processing circuitry such as an MPEG decoder. The output of the processing circuitry **184** is typically the digital video data stream that represents the program channel and is used for picture-in-picture (PnP) operations, for example, where the set-top box circuitry **172** includes two tuners with one tuner providing the primary viewing feed and a second tuner providing the PnP viewing feed. The output of the processing circuitry **184**, as well as a PnP input stream **194** from a second tuner if a second tuner is being utilized for PnP operations, can be processed by a video/audio controller **186** to generate a video output signal **176** that can subsequently be utilized, for example, with a TV or VCR. Additional tuners could also be used, if desired.

FIG. **1**C is a block diagram of basic receiver architecture **100** according to the present invention utilizing a large-step local oscillator **106**. Input signal **107**, for example from a satellite dish antenna or other source, is received and passed through a low noise automatic-gain amplifier (LNA) **105**. In the embodiments described herein, it is assumed that the input signal **107** is a signal spectrum that includes multiple channels, such as a satellite television signals that includes 32 transponder channels between the frequencies of 950 MHz and 2150 MHz. The output signal **108** from LNA **105** is initially tuned with analog coarse tune circuitry **102** utilizing a local oscillator mixing frequency (f_{LO}) provided by large-step local oscillator (LO) circuitry **106**. The large-step LO circuitry **106** also receives a coarse channel selection signal **162**. The resulting coarsely tuned signal **110** is then subjected to digital fine tune circuitry **104** utilizing the center frequency (f_{CH}) **114** for the desired channel to produce digital baseband signals **112**.

FIG. 1D is a block diagram of an embodiment for coarse tune circuitry **102**. The channel spectrum signal **108** is sent to mixers **122** and **124**. The output Q signal from mixer **124** is desired to be offset by a phase shift of 90 degrees from the output I signal from mixer **122**. To provide these two signals, a local oscillator mixing frequency (f_{LO}) **116** and a dual divide-by-two and quadrature shift block (÷2/90°) **126** may be utilized. The local oscillator mixing frequency (f_{LO}) **116** is divided by two in block **126** to provide mixing signals **125** and **127**. Block **126** also delays the signal **125** to mixer **124** by 90 degrees with respect to the signal **127** to mixer **122**. Mixer **122** mixes the channel spectrum signal **108** with the signal **1277** to provide an in-phase signal (I) for the coarse tune I/Q signals **110**. And mixer **124** mixes the channel spectrum signal **108** with the signal **125** to provide the quadrature signal (Q) for the coarse tuned I/Q signals **110**. Because the dual divide-by-two and quadrature shift block (÷2/90°) **126** will divide the local oscillator mixing frequency (f_{LO}) **116** by two, the local oscillator mixing frequency (f_{LO}) **116** will be two-times the desired mixing frequency for the mixers **122** and **124**. It is also noted that the block **126** could be modified, if desired, to provide any desired frequency division, such as a divide-by-four operation, assuming that a corresponding change were made to the local oscillator mixing frequency (f_{LO}) **116** so that the desired mixing frequency was still received by the mixers **122** and **124**. It is further noted that block **126** could simply provide a quadrature phase shift and provide no frequency division, such that the local oscillator mixing frequency (f_{LO}) **116** is directly used by the mixers **122** and **124** except for the 90 degrees phase shift between the two signal **125** and **127**.

FIG. 1E is a block diagram of an embodiment for a large-step local oscillator **106**. The large-step local oscillator **106**, according to the present invention, is designed to generate a mixing signal at one of a plurality of predetermined frequencies. The output LO frequency is selected based upon the channel within the spectrum that is desired to be tuned. The output LO frequencies can be organized and uniformly or non-uniformly spaced as desired. As one example, the output LO frequencies can be a fixed bandwidth apart from each other and can span the entire input channel spectrum signal **108**. In the embodiment depicted, the local oscillator mixing frequency (f_{LO}) **116** is generated using phase-lock-loop (PLL) circuitry. The phase detector **152** receives a signal **172** that represents a divided version of a reference frequency (f_{REF}) and signal **174** that represents a divided version of the output frequency (f_{LO}) **116**. A reference frequency (f_{REF}) can be generated, for example, using crystal oscillator **164**. The output of the crystal oscillator **164** is provided to divide-by-M block **166** to produce the signal **172**. The output frequency (f_{LO}) **116** is provided to divide-by-N block **156** to produce the signal **174**. The dividers **156** and **166** are controlled by large-step LO control circuitry **160**. Based upon a coarse channel selection signal **162**, which represents information identifying the channel that is desired to be tuned, the control circuitry **160** sets the dividers **156** and **166** to generate a desired output frequency (f_{LO}) **116**. Depending upon these settings for the dividers **156** and **166**, the phase detector **152** and controlled oscillator **154** act together to provide phase-lock-loop (PLL) circuitry that attempts to lock the output frequency (f_{LO}) **116** to a selected LO mixing frequency, as described in more detail below.

In operation, the phase detector **152** provides a control input **153** to the controlled oscillator **154** in order to control the output frequency of the controlled oscillator **154**. The nature of this control input **153** will depend upon the circuitry used to implement the controlled oscillator **154**. For example, if a voltage controlled oscillator (VCO) is used, the control input **153** can include one or more voltage control signals. If LC-tank oscillator architecture is utilized for the VCO, one or more voltage control signals could be used to control one or more variable capacitances within the VCO circuitry. Advantageously, the large-step LO receiver architecture of the present invention allows for the use of less precise oscillator architectures, such as RC-based oscillator architectures. One RC-based oscillator architecture that could be used is a inverter-based ring oscillator where the delay of each inverter stage can be adjusting using one or more control signals as the control input **153**. It is noted, therefore, that a wide variety of oscillator architectures and associated control signals could be used for the controlled oscillator **154** and the control input **153**. This wide variety of applicable architectures is in part due to the wide-band nature of the PLL that can be utilized with the architecture of the present invention, which in turn causes the output phase noise to track the phase noise of the reference oscillator over a wider spectrum range thereby relaxing the required VCO phase noise specifications.

FIG. 2A is a diagram for an example channel spectrum signal **108** with predetermined frequency bins spanning the channel spectrum **208**. The channel spectrum can include any number of different channels, such as channel **206** with a center frequency at f_{CH}, and the channel spectrum can span any desired frequency range. With respect to satellite set-top box receivers, for example, the channel spectrum includes 32 transponder channels between 950 MHz and 2150 MHz. In the embodiment depicted, the spectrum **208** between frequencies f_1 and f_2 has been partitioned into N different bins, which are designated BIN1, BIN2, BIN3 . . . BIN(N-1), BIN(N). Each bin has a single pre-selected LO frequency, which are designated f_{LO1}, f_{LO2}, f_{LO3} . . . $f_{LO(N-1)}$, $f_{LO1(N)}$. If the desired channel **206** falls within the bin, the bin LO frequency can be used as the mixing signal to provide the down conversion of the desired channel to a frequency range around DC. In the embodiment depicted, channel **206** falls within BIN3, and LO frequency f_{LO3} can be used as the mixing signal. In addition, in the embodiment depicted, the width **202** of each bin has been selected to be the same, and the width **204** between each LO frequency has been selected to be the same. It is noted, however, that frequency bin sizes and LO frequencies can be non-uniformly distributed and can be varied or modified depending upon the implementation desired. In addition, multiple LO frequencies per bin could be used and different numbers of LO frequencies could also be used depending upon the implementation desired.

FIG. 2B is a diagram for an example coarse tune signal spectrum **110** after it has been mixed with LO frequency f_{LO3}. As depicted, the channel spectrum **208** has been moved so that channel **206** is now centered at a resulting frequency that is equal to the channel center frequency (f_{CH}) minus the LO mixing frequency (f_{LO3}). The spectrum **208** similarly has been mixed down so that the spectrum is now between the frequencies f_1-f_{LO3} and f_2-f_{LO3}.

FIG. 2C is a diagram for an example satellite signal spectrum **208** where a desired channel **252** overlaps a bin LO frequency and a desired channel **254** overlaps a bin-to-bin boundary. First, considering channel **254**, its channel center frequency (f_{CH}) is shown as sitting on top of the boundary between BIN(N-1) and BIN(N). As such, the LO frequency $f_{LO(N-1)}$ for BIN(N-1) or the LO frequency $f_{LO(N)}$ for BIN(N) can be used as represented by the arrows identified by

element number **258**. Now, considering channel **252**, its channel center frequency (f_{CH}) is shown as sitting on top of the LO frequency f_{LO2} for BIN2 in which channel **252** falls. If LO frequency f_{LO2} for BIN2 were used to mix down channel **252**, the channel center frequency (f_{CH}) would land at DC thereby in effect causing a direct down conversion of channel **252**. This is an undesirable result according to the architecture of the present invention. Thus, where the channel **252** overlaps the LO frequency for the bin in which it falls, the LO frequency for an adjacent bin can be used as the mixing LO frequency. As depicted, therefore, instead of using LO frequency f_{LO2} for BIN2 to mix down channel **252**, the LO frequency f_{LO1} for BIN1 or the LO frequency f_{LO3} for BIN3 can be used as represented by the arrows identified by element number **256**, thereby avoiding direct down conversion to DC. It is noted that the decision of which bin LO frequency to use can be made utilizing any of a wide variety of considerations depending upon the particular application and design criterion involved.

FIG. **3** is a diagram of an embodiment **300** for an overlapping bin architecture for an example 32 transponder channel satellite signal spectrum for a television set-top box. In particular, the satellite transponder channel spectrum **208** includes 32 transponder channels between 950 MHz and 2150 Mhz with each channel being about 37.5 MHz wide. As depicted, channel **308** represents the transponder channel desired to be tuned, and element **306** represents the width of channels. As configured in the embodiment **300**, there are 23 overlapping bins configured as 12 odd numbered bins **320** (BIN1, BIN3 . . . BIN23) and 11 even numbered bins **322** (BN2, BIN4 . . . BIN22). The width of each odd bin **320** as designated by element **304** can be selected to be the same. The width of each even bin **322** as designated by element **302** can be selected to be the same. And the widths for bins **320** and **322** can be selected to be the same. As discussed above, each bin can be configured to have a LO frequency associated with it that is located at the center of the bin as represented by the dotted lines, such as dotted lines **309** and **310**. The width between LO frequencies associated with each consecutive bin, such as between the LO frequencies for BIN12 and BIN13, can be the same as designated by element **312**. As such, the width between LO frequencies of consecutively numbered bins is half the width of the bins. For example, if widths **302** and **304** of the odd and even bins are set to 100 MHz, the width or frequency step between LO frequencies for consecutively numbered bins becomes 50 MHz.

An overlapping bin architecture, such as embodiment **300**, helps improve the performance and efficiency of the receiver architecture of the present invention by providing redundancy and helping to resolve channels whose center frequencies happen to be at the boundary between two bins. As will be discussed in more detail below, it is often desirable to include two or more receivers in a single integrated circuit and to reduce the frequency range within which the digital fine tune circuitry **104** must operate. In selecting the bin configuration for a channel spectrum, it is advantageous to increase the frequency step between LO frequencies so that adjacent LO frequencies from two or more separate receivers in an integrated multi-tuner satellite receiver are far enough apart to avoid interference with each other. However, it is also advantageous to reduce the frequency step between the LO frequencies to reduce the frequency range within which the digital fine tune circuitry **104** must operate and to relax the design specifications for the digital fine tune circuitry **104**, such as, for example, low pass filter (LPF) circuitry and analog-to-digital conversion (ADC) circuitry. For the embodiment **300** of FIG. **3**, a 50 MHz frequency step is one reasonable choice for the frequency step when considering the trade-off between minimizing the frequency step while still keeping adjacent LO frequencies separated to avoid interference. It is also noted that a 10 MHz frequency step may also be a desirable frequency step. And it is further noted that other frequency steps or configurations may be chosen depending upon the particular design requirements involved.

With respect to standard satellite tuners and a transponder channel signal spectrum between 950 MHz and 2150 MHz, the local oscillator mixing frequency resolutions are typically on the range of 100 KHz. Thus, where the frequency step is chosen to be 10-50 MHz or more, the coarse tuning provided by the large-step oscillator of the present invention can provide frequency steps that are 100-times or more larger than traditional resolutions. Because the bandwidth of PLLs that provide these local oscillator output signals have a bandwidths that are typically 1/10 of the frequency step, traditional PLLs would be expected to have bandwidths on the range of 10 KHz. In contrast, with the large-step local oscillator of the present invention, the bandwidth of the PLL would likely be more on the order of 1-5 MHz or higher, depending upon the resolution chosen for the coarse tune frequency steps. It is noted that these numbers are provided as examples and should not be considered as limiting the invention. The coarse analog tuning and fine digital tuning architecture discussed herein is applicable to a wide range of applications and not limited to these example embodiments, frequency ranges or bandwidths.

Looking to channel **308** in FIG. **3**, it is located within the channel spectrum such that it overlaps the LO frequency for BIN2 and the boundary of BIN1 and BIN2, which are both designed to be located at about 1050 MHz. As discussed above with respect to FIG. **2**C, the LO mixing frequency f_{LO2} would not be used to avoid a direct down conversion of channel **308** to DC. Rather, the LO mixing frequency f_{LO1} for BIN1 or the LO mixing frequency f_{LO3} for BIN3 could be used to mix down the channel **308**. It is noted that by having overlapping frequency bins, an LO frequency closer to the center frequency for the desired channel **308** could be used. For example, if only the non-overlapping even numbered bins **322** were provided in the embodiment **300**, the next adjacent LO mixing frequency would have been LO mixing frequency f_{LO4} for BIN4, which is 100 MHz from the LO mixing frequency f_{LO2} for BIN2, rather than the 50 MHz frequency step between the LO frequencies for BIN2 and BIN1 and for BIN2 and BIN3. As stated above, overlapping bin architecture of FIG. **3** helps resolve boundary or inter-bin channels and helps reduce the bandwidth of the tuned signal thereby reducing the bandwidth requirements for the anti-aliasing filters and reducing the sampling rate requirements for ADC circuitry that may be used in the digital fine tune circuitry. It is noted that a similar result to the overlapping bin approach could be achieved by expanding the number of non-overlapping bins to reduce the frequency step between adjacent LO frequencies. One additional benefit of the overlapping bin architecture, however, is that more than one bin has been designated as covering the same frequency range, thereby providing a desirable level of redundancy.

FIGS. **4**A and **4**B are example implementations for the basic receiver architecture using a wide-band ADC for the digital fine tune circuitry **104** and a narrow band tunable bandpass ADC for the digital fine tune circuitry **104**, respectively. In particular, embodiment **400** of FIG. **4**A utilizes a wide-band ADC **402** that receives coarsely tuned signal **110**

and provides a digital output to a tunable digital filter **404**, which in turn outputs the digital baseband signals **112**. For fine tuning the desired channel within the signal **110**, the tunable digital filter **404** utilizes a variable frequency (f_V) **406** generated, for example, by a numerically controlled oscillator (NCO) **408** that in turn receives the center frequency (f_{CH}) **114** for the desired channel. Embodiment **450** of FIG. **4**B utilizes a narrow-band (complex or real) tunable bandpass ADC **452** that receives the coarsely tuned signal **110** and provides a digital output to a tunable digital filter **454**. For tuning the digital output to the desired channel, the narrow-band bandpass ADC utilizes the center frequency (f_{CH}) **114** for the desired channel. Additional tuning of the desired channel is provided by the tunable digital filter **454**, which utilizes a variable frequency (f_V) **456** generated, for example, by a numerically controlled oscillator (NCO) **458** that in turn receives the center frequency (f_{CH}) **114** for the desired channel. It is noted that these implementations for providing fine tuning of the coarsely tuned channel spectrum do not mix the desired channel down to a fixed target IF frequency and do not mix the desired channel to DC. Rather, these implementations use the analog coarse tune circuitry **102** to mix the desired channel down to a variable location within a frequency range around DC, and then they perform digital conversion and digital filtering directly on this coarsely tuned channel spectrum.

FIG. **5**A is a block diagram of an embodiment **500** for a two receiver architecture located on a single integrated circuit. In general, this embodiment **500** duplicates the circuitry of FIG. **1**C to produce a dual receiver architecture. The first receiver includes analog coarse tune circuitry **102**A, large-step LO1 circuitry **106**A (which outputs a first LO mixing frequency (f_{LO1})**116**A), and digital fine tune circuitry **104**A (which receives a first center frequency (f_{CH1}) **114**A for a first desired channel to be tuned). As discussed above, the first receiver coarsely tunes the input channel spectrum **108**A to produce the intermediate coarsely tuned channel signal **110**A and then digitally processes this signal to finely tune the channel and to produce digital baseband signals for the first tuner output **112**A. Similarly, the second receiver includes analog coarse tune circuitry **102**B, large-step LO2 circuitry **106**B (which outputs a second LO mixing frequency (f_{LO2}) **116**B), and digital fine tune circuitry **104**B (which receives a second center frequency (f_{CH2}) **114**B for a second desired channel to be tuned). The second receiver coarsely tunes the input channel spectrum **108**AB to produce the intermediate coarsely tuned channel signal **110**B and then digitally processes this signal to finely tune the channel to produce digital baseband signals for the second tuner output **112**B. It is noted that the two tuner embodiments discussed herein are example multi-tuner satellite receiver embodiments and that the architecture of the present invention could be utilized to integrate additional receivers within a single integrated circuit.

Because there are two local oscillators on a single integrated circuit in the embodiment **300** of FIG. **5**A, it is possible that the same LO mixing frequency may be selected for use by each of the two receivers, such that $f_{LO1}=f_{LO2}$. In such a case, unless these two frequencies can be precisely matched, they will likely interfere with each other. As one solution to this problem, the dual receiver architecture can be implemented such that the two receivers share a single LO mixing frequency in circumstances where the same LO mixing frequency is in fact selected for use by each of the two receivers ($f_{LO1}=f_{LO2}$). In the embodiment **500** of FIG. **5**A, the switch **502** is provided so that the receivers can share the first LO mixing frequency (f_{LO1}) in such circumstances. One problem that remains, however, is how to keep the second large-step LO2 circuitry **106**B from attempting to output an interfering mixing frequency. Possible solutions to this problem include (1) turning off the second receive path and sharing the first tuner output, (2) turning off the second large-step LO2 circuitry **106**B and sharing the first LO mixing frequency (f_{LO1}), for example, using a controlled switch **502** as shown in FIG. **5**A, or (3) sharing the first LO mixing frequency (f_{LO1}) and also causing the large-step LO2 circuitry **106**B to move to a non-interfering LO mixing frequency (f_{LO2}) that will not be used while the first LO mixing frequency (f_{LO1}) is being shared. It is further noted that other techniques and solutions could be implemented, if desired, for addressing the problem of circumstances where the second LO mixing frequency and the first LO mixing frequency would overlap. It is also again noted that the architecture of the present invention could be utilized to integrate additional receivers within a single integrated circuit. For example, if four tuners were utilized, additional receiver circuitry could be integrated with that shown in FIG. **5**A to provide additional analog coarse tuning circuitry, digital fine tuning circuitry and LO circuitry for a third receiver and additional analog coarse tuning circuitry, digital fine tuning circuitry and LO circuitry for a fourth receiver. As discussed above, a variety of selection techniques could be implemented for the LO frequencies provided by the different LO circuitries with respect to the multiple receivers such that interfering overlaps of the LO mixing frequencies could be avoided.

FIGS. **5**B and **5**C are flow diagrams of example implementations for the first two solutions above for handling the second LO frequency where a single LO frequency is shared between two receivers. In embodiment **520** of FIG. **5**B, decision block **522** determines if the two selected LO mixing frequencies will be the same ($f_{LO1}=f_{LO2}$). If the answer is "YES," then in block **526**, the first LO mixing frequency (f_{LO1}) is shared, and the second local oscillator circuitry (LO2) is powered down and turned off. If the answer is "NO," then in block **524**, each LO circuitry operates, and first LO mixing frequency (f_{LO1}) is not shared. In the embodiment **540** of FIG. **5**C, decision block **522** similarly determines if the two selected LO mixing frequencies will be the same ($f_{LO1}=f_{LO2}$). And again, if the answer is "NO," then in block **524**, each LO circuitry operates, and first LO mixing frequency (f_{LO1}) is not shared. If the answer is "YES," then in block **528**, the first tuner output **112**A is shared, and the entire second receiver path circuitry is powered down and turned off.

FIGS. **6**A and **6**B are block diagrams for example implementations for providing satellite dish signals to satellite set-top box dual receiver architectures. In FIG. **6**A, there is a single incoming signal **107** from the satellite dish antenna. This incoming satellite spectrum signal **107** is received by LNA **105** and then split into two signals **108**A and **108**B to provide inputs to each of the two receiver paths. In FIG. **6**B, there are two singles **107**A and **107**B coming the satellite dish antenna. These incoming signals **107**A and **107**B are then received by two separate LNAs **105**A and **105**B. LNA **105**A provides an output signal **108**A for a first receiver path, and LNA **105**B provides an output signal **108**B for a second receiver path. It is noted that with respect to the embodiment **600** of FIG. **6**A, both the solutions of FIGS. **5**B and **5**C are available. However, with the embodiment **650** of FIG. **6**B, the solution of FIG. **5**C would not available because the two input satellite transponder channel spectrums **108**A and **108**B may not be the same and, therefore,

sharing the first tuner output **112**A may cause errors with respect to the output of the second receiver circuitry.

FIG. **7**A is a block diagram for an dual receiver implementation of the receiver architecture of the present invention using wide-band analog-to-digital converters, such as discussed with respect to FIG. **4**A above. In embodiment **750**, an input signal **107** is received by LNA **105**, and LNA **105** provides two input channel spectrum signals **108**A and **108**B to the two receiver paths. A first receiver path includes mixers **122**A and **124**A, 90 degree phase shift block **126**A, and large-step LO1 circuitry **106**A, which together output complex I/Q signals that are coarsely tuned channel spectrum signals. These complex I/Q signals are then processed by a low pass filter **752**A, a wide-band ADC **754**A and a digital quadrature mixer and channel select filter **756**A. A sampling clock (F_{CLK}) **760** is provided to the wide-band ADC **754**A and the digital quadrature mixer and channel select filter **756**A. For fine tuning the desired channel, the digital quadrature mixer and channel select filter **756**A utilizes a variable frequency (f_{V1}) **406**A generated by numerically controlled oscillator (NCO) **408**A that in turn receives the center frequency (f_{CH1}) **114**A for a first desired channel. The first receiver path outputs quadrature I/Q baseband signals **758**A as the first tuner output. A second receiver path duplicates the first receiver path and includes mixers **122**B and **124**B, 90 degree phase shift block **126**B, large-step LO2 circuitry **106**B, low pass filter **752**B, a wide-band ADC **754**B and a digital quadrature mixer and channel select filter **756**B. As with the first receiver path, a sampling clock (f_{CLK}) **760** is provided to the wide-band ADC **754**B and the digital quadrature mixer and channel select filter **756**B. For fine tuning the desired channel, the digital quadrature mixer and channel select filter **756**B utilizes a variable frequency (f_{V2}) **406**B generated by NCO **408**B that in turn receives the center frequency (f_{CH2}) **114**B for a second desired channel. It is noted that the embodiment **750** could also have additional circuitry for handling overlaps between the first and second LO mixing frequencies (f_{LO1}, f_{LO2}), as discussed with respect to FIGS. **5**A-C and **6**A-B above.

FIG. **7**B is a block diagram for a dual receiver implementation of the receiver architecture of the present invention using complex tunable bandpass delta-sigma analog-to-digital converters, such as discussed with respect to FIG. **4**B above. In embodiment **700**, an input signal **107** is received by LNA **105**, and LNA **105** provides two input channel spectrum signals **108**A and **108**B to the two receiver paths. A first receiver path includes mixers **122**A and **124**A, 90 degree phase shift block **126**A, and large-step LO1 circuitry **106**A, which together output complex I/Q signals that are coarsely tuned channel spectrum signals **708**I and **708**Q. These complex I/Q signals are then processed by a complex tunable bandpass filter **702**A with outputs **710**I and **710**Q, a complex tunable bandpass delta-sigma (ΔΣ) ADC **704**A with outputs **712**A and **712**Q, and a digital down-converter and decimator **706**A. A sampling clock (f_{CLK}) **705** is provided to complex tunable bandpass ΔΣ ADC **704**A and to the digital down-converter and decimator **706**A. For digital processing and tuning of the desired channel, the complex tunable bandpass filter **702**A and the complex tunable ΔΣ ADC **704**A receive the center frequency (f_{CH1}) **114**A for a first desired channel. For further fine tuning of the desired channel, the digital down-converter and decimator **706**A utilizes a variable frequency (f_{V1}) **456**A generated by numerically controlled oscillator (NCO) **458**A that in turn receives the center frequency (f_{CH1}) **114**A. The first receiver path outputs quadrature I/Q baseband signals **714**I and **714**Q as the first tuner output. A second receiver path duplicates the first receiver path and includes mixers **122**B and **124**B, 90 degree phase shift block **126**B, large-step LO2 circuitry **106**B, complex tunable bandpass filter **702**B, a complex tunable bandpass ΔΣ ADC **704**B and a digital down-converter and decimator **706**B. As with the first receiver path, a sampling clock (f_{CLK}) **705** is provided to the complex tunable bandpass ΔΣ ADC **704**B and the digital down-converter and decimator **706**B. For digital processing and tuning of the desired channel, the complex tunable bandpass filter **702**B and the complex tunable ΔΣ ADC **704**B receive the center frequency (f_{CH2}) **114**B for a second desired channel. For further fine tuning of the desired channel, the digital down-converter and decimator **706**B utilizes a variable frequency (f_{V2}) **456**B generated by NCO **458**B that in turn receives the center frequency (f_{CH2}) **114**B. It is noted that the embodiment **750** could also have additional circuitry for handling overlaps between the first and second LO mixing frequencies (f_{LO1}, f_{LO2}), as discussed with respect to FIGS. **5**A-C and **6**A-B above.

It is noted that with respect to embodiments of FIGS. **7**A and **7**B, the required bandwidth for ADCs **754**A/B and the tuning range for ADCs **704**A/B can be limited to positive frequencies if desired. Negative frequencies can be tuned by applying the complex conjugate of the Q path signal to the filters **102**A/B and **752**A/B. This negative frequency conversion circuitry, therefore, can be placed after the mixers **124**A/B in each of the embodiments **700** and **750**. This pre-processing advantageously limits the required processing range for the complex analog processing done by the ADCs **704**A/B.

FIG. **7**C provides an example embodiment for converting negative frequencies to reduce the needed tuning range of the complex tunable bandpass ΔΣ ADC **704**A/B to positive frequencies. As depicted, the I and Q path signals received by the complex tunable bandpass ΔΣ ADC **704**A/B are first processed by the complex conjugate converter **770**. In the embodiment shown, the I path signal passes through the complex conjugate converter **770** and is provided to the complex tunable bandpass ΔΣ ADC **704**A/B. The Q path signal is connected to the "0" input of the multiplexer (MUX) **774**. The Q path signal is also connected to gain stage **772** (−1 gain), which in turn provides an output that is connected to the "1" input of the MUX **774**. The conjugate signal (CONJ SIGNAL) used to control the MUX **774** is the center frequency (f_{CH}) **114**A/B that is also utilized by the complex tunable bandpass ΔΣ ADC **704**A/B. As stated above, by using this complex conjugate converter to process the I and Q path signals, the complex tunable bandpass ΔΣ ADC **704**A/B can be advantageously limited to a positive tuning range thereby reducing the bandwidth requirement for the complex tunable bandpass ΔΣ ADC **704**A/B. It is further noted that for a fully differential design, the −1 gain for gain stage **772** can be implemented relatively simply by swapping the two single-ended positive and negative signals that would be received by gain stage **772** in such a fully differential design.

FIG. **8**A and FIG. **8**B are a block diagram and response diagram, respectively, that describe one implementation for calibrating and handling tuning errors in a bandpass delta-sigma converter within a receiver, such as tunable bandpass ΔΣ ADC **704**A/B in FIG. **7**B. This implementation takes advantage of the result that an improperly tuned delta-sigma converter will typically produce large amounts of noise in the final output of the receiver.

Looking first to FIGS. **8**A, a block diagram is depicted of an embodiment **800** for calibrating tuning errors with respect

to a bandpass delta-sigma converter within a receiver, such as the complex tunable bandpass delta-sigma analog-to-digital converters in the embodiment of FIG. 7B. This embodiment **800** detects energy in the receiver output and provides a tuning offset signal (ω_{SET}) that adjusts the tunable bandpass ΔΣ ADC **704** to correct for errors in its center frequency. Similar to the embodiment **700** of FIG. 7B, embodiment **800** also includes a tunable bandpass filter **702** and a digital down-converter and decimator **706**, which itself includes a digital quadrature mixer **806** and a channel select low pass filter (LPF) **808**. The output baseband I/Q signals **714** are sent to an energy detector **810** that determines noise in the output signal. The energy detector **810** provides an output to the auto-tune control circuitry **812**. The auto-tune control circuitry **812** in turn provides the tuning offset signal (ω_{SET}) to the tunable bandpass ΔΣ ADC **704**. And the auto-tune control circuitry **812** also sends an auto-tune control signal **816** to a multiplexer (MUX) **802**. The multiplexer **802** chooses between the channel spectrum I/Q signal **708** and ground and outputs a signal **804** to the tunable bandpass filter **702**. In operation, if the ΔΣ ADC **704** is mistuned, then the noise within the output baseband I/Q signals **714** will increase. Thus, by adjusting the tuning offset signal (ω_{SET}) **814** to reduce and minimize this noise, the ΔΣ ADC **704** can be tuned or calibrated to compensate for tuning errors in the ΔΣ ADC **704**.

FIG. **8**B is a diagram representing the signal correction of FIG. **8**A. In the noise level representation **850**, response line **852** represents the tuning response of the ΔΣ ADC **704**. The channel **854** represents a desired channel located at a channel center frequency (ω_0). The ΔΣ ADC **704** is ideally tuned so that its notch falls on the channel center frequency (ω_0); however, the notch for the ΔΣ ADC **704**, as shown, is located at a first frequency (ω_1). The difference between the desired notch location at the channel center frequency (ω_0) and the actual notch location at the first frequency (ω_1) represents an error amount (ω_{ERROR}) in the tuning for the ΔΣ ADC **704**. As represented by line **856**, the tuning offset signal (ω_{SET}) acts to move the notch for the ΔΣ ADC **704** so that it more closely aligns with the channel center frequency (ω_0). As depicted in FIG. **8**B, the center frequency (ω_0) for the desired channel **854** is offset from the notch for the ΔΣ ADC **704**. In operation, the digital quadrature mixer **806** would multiply the mistuned output of the ΔΣ ADC **704** by $\exp(-j\omega_0 n)$ thereby causing significant noise in the desired output channel **854**, which was selected and tuned by the channel select LPF **808**. Thus, due to the tuning error (ω_{ERROR}) in the ΔΣ ADC **704**, the noise at the output **714** will be much greater than for circumstance where this error is adjusted so that it approaches zero.

As indicated above, the technique of FIG. **8**A and FIG. **8**B takes advantage of the knowledge that an improperly tuned delta-sigma converter notch will produce large amounts of noise in the channel tuned by a channel select filter **808**. During auto-tune in the embodiment depicted, the input to the ΔΣ ADC **704** could be forced to zero by selecting ground through the MUX **802**. The output energy can then be minimized by adjusting the tuning offset signal (ω_{SET}) **814** and thereby adjusting the tuning error (ω_{ERROR}). Once a minimum is found, the auto tuning or calibration could be completed and normal operation could proceed by changing the selection of MUX **802** to the input channel spectrum I/Q signal **708**. It is noted that a auto-tune algorithm could implemented utilizing 30 to 60 discrete settings for the tuning offset signal (ω_{SET}) **814**, such that the auto-tune algorithm could be executed very rapidly. In addition, the auto-tune algorithm could be executed each time a different channel were selected. And this auto-tune procedure and implementation could also be used to calibrate a bandpass filter, such as tunable bandpass filter **702**, that sits in front of the ΔΣ ADC **704**. In this case, a master-slave approach could be used, if desired, such that the filter is constructed using similar (or matched) complex integrators as used by the circuitry of the ΔΣ ADC **704**, as discussed below with respect to FIG. **8**C. It is further noted that the clock provided to the device that drives the sampling of the ΔΣ ADC **704** and the digital quadrature mixer **806** can be used as an accurate time reference for the auto-tune implementation.

FIG. **8**C is a block diagram for a master-slave tuning arrangement **870** between a tunable bandpass analog-to-digital converter (master) and a tunable bandpass filter (slave). In general, master-slave tuning of second circuit (slave) based upon a first circuit (master) is typically implemented by building the second circuit out of similar or identical circuit building blocks as the first circuit. One can then fine tune the building blocks of the first circuit through a feedback methodology. The control (or offset) signals which are derived out of the feedback methodology are applied not only to the first circuit but also to the second circuit as well.

Because the second circuit was not a part of this feedback operation, the second circuit can be tuned by the notion of similarity (or matching). The second circuit, in this case, is called the slave whereas the first circuit involved in the feedback operation is called the master. Usually, the circuit selected as the master circuit will have a topology that is reasonably amenable to a feedback methodology where as the circuit selected as the slave circuit is often not amenable to a feedback operation. One typical example of a master-slave tuning implementation is fine tuning of a filter by slaving it into an oscillator which has the same integrators.

Looking back to FIG. **8**C, the embodiment depicted utilizes the tunable bandpass ΔΣ ADC **704** as the master tuning circuit that allows for fine tuning of the tunable bandpass filter **702**, which is the slave circuit. To implement this master-slave approach, for example, the tunable bandpass ΔΣ ADC **704** can be built out of identical or similar complex integrators as used for the filter **702**. In operation, some feedback operation is conducted on the output **712** of the tunable bandpass ΔΣ ADC **704**, and a master feedback signal **876** is produced. This master feedback signal **876** is applied to the tuning control circuitry **812**, which in turn provides a master tuning signal **814** to the tunable bandpass ΔΣ ADC **704**. This feedback operation, for example, may be the energy detection implementation discussed above with respect to FIGS. **8**A and **8**B. In addition, the master tuning signal **814** may be the tuning offset signal (ω_{SET}) **814**, and the input signal to the tunable bandpass filter **702** could be the input signal **804**, as discussed above with respect to FIGS. **8**A and **8**B. Once the feedback operation and the tuning control circuitry has tuned the tunable bandpass ΔΣ ADC **704**, the master tuning signal **814** is the applied by similarity (or matching) to the tunable bandpass filter **702** as the matched slave tuning signal **878**.

FIGS. **9**A-**9**E are block and signal diagrams that describe implementations for the digital down-converter and decimator **706**A/B of FIG. 7B. These implementations utilize multiple stages of digital mixing and down conversion to bring the output **712** of the bandpass ΔΣ ADC **704**A/B to baseband I/Q signals. The output **712** of the bandpass ΔΣ ADC **704**A/B, for example, can be a complex 1-bit digital signal sampled at F_S with quantization noise shaping designed to have a minimum centered at the desired channel center frequency (ω_0). The multi-staged implementation

incrementally filters and decimates this signal to reduce the design requirements of each stage.

FIG. **9**A is a block diagram of the multi-stage architecture **900** for a digital down-converter and decimator **706** usable in the embodiment **700** of FIG. **7**B. The input **712** from a bandpass ΔΣ ADC **704** is processed by a series of cascaded stages, which as shown include STAGE1 **910**A, STAGE2 **910**B . . . STAGE(N) **910**C. Each stage provides an output to the next stage, as indicated by signal **905** from STAGE1 **910**A to STAGE2 **910**B and by signal **982** that would be from STAGE(N-1) to STAGE(N) **910**C. It is noted that the stages **910**A, **910**B . . . **910**C (STAGE1, STAGE2 . . . STAGE(N)) could all be implemented with similar circuitry, if desired.

FIG. **9**B is a block diagram of example circuitry for stages **910** within the multi-stage architecture of FIG. **9**A. In the stage embodiment depicted, the stage input is received by mixer **906**, which digitally mixes the stage input with a mixing signal **912**. The resulting signal is passed through a low pass filter (LPF) **902**. This LPF **902** can be tunable, if desired, and the tuning signal **911** can be used to tune the tunable LPF **902**. The output of the LPF **902** is then decimated down by decimator **904** to provide the stage output. The decimator **904** can have a fixed decimation rate, if desired, or can have a variable decimation rate (down-by-M) that is controlled by decimation rate selector signal **915**. The output signal from the stage **910** is then sent to the next stage. For example, where the stage is the STAGE1 **910**A, the input signal to the stage would be signal **712** from the ΔΣ ADC **704**, and the output signal would be signal **905** that is received by STAGE2 **910**B. It is noted that the values for the digital mixing signal **912** and the decimation rate for the decimator **904** in each stage can be selected, as desired, depending upon the spectrum segmentation strategy selected.

FIGS. **9**C, **9**D and **9**E described an example implementation of the multi-stage architecture of FIG. **9**A utilizing a plurality of identical or similar non-final stages followed by a final stage that brings the signal down to a desired or optimal signal processing rate.

First, looking to FIG. **9**C, a block diagram is depicted for example implementation **950** of the architecture of FIG. **9**A utilizing a fixed decimation rate in non-final stages and a variable decimation rate in the final stage. In this embodiment **950**, the fixed decimation rate stages, or non-tunable stages, include one or more cascaded stages. There are two example non-final, non-tunable stages depicted, namely STAGE1 **910**A and STAGE2 **910**B. STAGE1 **910**A receives the input signal **712** processes it with mixer **906**A, LPF **902**A and down-by-two decimator **904**A before providing an output signal to the next stage. STAGE2 **910**B uses the same or similar structure and processes the signal from STAGE1 **910**A with mixer **906**B, LPF **902**B and down-by-two decimator **904**B before providing an output signal to the next stage. In the embodiment depicted, the mixers **906**A, **906**B digitally mix their respective input signals with mixing signals **912**A, **912**B, and these mixing signals **912**A, **912**B . . . used by each stage are represented by the formula: $\exp[j(2\pi/N)n]$ where $N=\{\pm1, \pm2, \pm4\}$ and where "n" represents the time sequence index. In addition, as shown in FIG. **9**C, each stage can use a different exponential source as a mixing signal with each mixing signal using a different N, such as N1 for mixing signal **912**A, N2 for mixing signal **912**B, and so on, where N1, N2, . . . $=\{\pm1, \pm2, \pm4\}$. As discussed further below with respect to FIG. **9**D, for each non-tunable stage in FIG. **9**C, the digital mixer **906** for the stage can be configured to digital mix the input to the stage with a mixing signal selected from a plurality of predetermined mixing signals that are chosen to reduce complexity for calculations used for the digital mixing. In addition, the mixing signal selected for a particular stage (as determined in this embodiment with N1 for stage **910**A, N2 for stage **910**B, and so on) can be made to depend upon the location of the channel center frequency within the input signal to the stage so that the spectrum for the input signal is rotated such that the desired channel falls within a desired frequency range.

For the last stage **980**, the input signal **982** from the next to last stage is first processed by mixer **991** which digitally mixes the signal **982** with a mixing signal **992** represented by the formula: $\exp[j\omega_1 n]$ where "ω_1" represents the frequency of the desired channel and where "n" represents the time sequence index. The resulting mixed signal is then sent to LPF **986**, which may be a tunable LPF, if desired. If tunable, the LPF **986** can be tuned utilizing the tuning signal **994**. The output from LPF **986** is then decimated by variable decimator **988** (divide-by-R). A decimation rate selection signal **990** provides a control signal to the variable decimator **988** to determine its decimation rate. The resulting output signal **714** provides the output baseband I/Q signals for the embodiment **700** of FIG. **7**B.

FIG. **9**D is a diagram for determining a factor (N) used in the non-final stage implementations of FIG. **9**C based upon the frequency location (ω) of the desired channel. Frequency ranges **952**, **954**, **956**, **958** and **960** represent various ranges within which a desired channel may be located within the output of the bandpass ΔΣ ADC **704**. Depending upon the frequency range within which the desired channel falls, the value for "N" will be set to a particular value for the equation that describes the mixing signal **912**. Region A, represented by range **952**, spans from $-\pi/4$ to $\pi/4$ and uses N=1. Region B, represented by range **954**, spans from $\pi/4$ to $3\pi/4$ and uses N=−4. Region C, represented by range **956**, spans from $-3\pi/4$ to $-\pi/4$ and uses N=4. Region D, represented by range **958**, spans from $3\pi/4$ to π and uses N=−2. And region E, represented by range **960**, spans from $-\pi$ to $-3\pi/4$ and uses N=2. Advantageously, for this implementation, the digital multiplies that must occur in digital mixer **906** are relatively trivial:

$$N=\pm1:\ \exp[j2\pi n]=\ldots 1, 1, 1, 1, \ldots$$

$$N=\pm2:\ \exp[\pm j\pi n]=\ldots 1, -1, 1, -1, \ldots$$

$$N=+4:\ \exp[j(\pi/2)n]=\ldots 1, j, -1, -j, \ldots$$

$$N=-4:\ \exp[-j(\pi/2)n]=\ldots 1, -j, -1, j, \ldots$$

In operation, the desired channel will lie somewhere in the range of frequencies defined by regions A, B, C, D and E. Because the location of the channel is known, the value for "N" can be set to the proper value, as indicated above, such that after multiplication in digital mixer **906**, the spectrum is rotated and the desired channel is within region A.

FIG. **9**E is a response diagram of an example low pass filter **902** for the non-final stage implementations of FIG. **9**C. The line **970** represents the relevant response for the LPF **902** depending upon the frequency location (ω) of the desired channel. The gap **972** represents a stop band attenuation for the LPF **902**.

In operation, the multi-stage implementation **950** described with respect to FIGS. **9**C, **9**D and **9**E uses a plurality of non-final cascaded stages that each include digital mixers to multiply the output of the ΔΣ ADC **704** in order to center the signal near ω=0 and that each applies the

mixer output to a low pass filter and a down-by-two decimator. The final stage is designed to have variable decimation so that the channel to be tuned is finally decimated to the baseband rate. Advantageously, by breaking up the digital mixing into multiple stages, this implementation reduces power requirements at the highest sample rates, reduces the resolution required for the digital mixers, and reduces the complexity of each stage including the final stage.

Further modifications and alternative embodiments of this invention will be apparent to those skilled in the art in view of this description. It will be recognized, therefore, that the present invention is not limited by these example arrangements. Accordingly, this description is to be construed as illustrative only and is for the purpose of teaching those skilled in the art the manner of carrying out the invention. It is to be understood that the forms of the invention herein shown and described are to be taken as the presently preferred embodiments. Various changes may be made in the implementations and architectures for database processing. For example, equivalent elements may be substituted for those illustrated and described herein, and certain features of the invention may be utilized independently of the use of other features, all as would be apparent to one skilled in the art after having the benefit of this description of the invention.

What is claimed is:

1. A receiver for tuning a channel within a signal spectrum, comprising:

local oscillator (LO) circuitry having a channel selection signal as an input and having a coarse-tune analog mixing signal as an output, the output mixing signal being selected from a plurality of predetermined output mixing signals depending upon a desired channel to be tuned;

analog coarse tune circuitry having the coarse-tune analog mixing signal as an input and having a signal spectrum as an input, the signal spectrum including a plurality of channels within a frequency range, and the analog coarse tune circuitry being configured to use the coarse-tune analog mixing signal to output a coarsely tuned signal spectrum such that the desired channel within the coarsely tuned signal spectrum is mixed down to a variable location within a frequency range around DC, the variable location being dependent upon the desired channel and the selected coarse-tune analog mixing signal; and

digital fine tune circuitry having the coarsely tuned signal spectrum as an input and having as an output digital baseband signals for the desired channel;

wherein the LO circuitry comprises phase-lock-loop (PLL) circuitry including a phase detector and a controlled oscillator, the phase detector receiving a first signal representative of a reference frequency, receiving a second signal representative of an output frequency of the controlled oscillator, and generating at least one control signal to adjust the output frequency of the controlled oscillator; and

wherein the LO circuitry further comprises control circuitry configured to receive a channel selection signal and to control divider circuitry that provides the first and second signals to the phase detector based upon divided versions of the reference frequency and the output of the controlled oscillator, the control circuitry acting to select the coarse-tune analog mixing signal output by the PLL circuitry.

2. The receiver of claim **1** wherein the signal spectrum comprises a channel signal spectrum from satellite communications, the satellite channel signal spectrum comprising a plurality of transponder channels with each transponder channel including a plurality of program channels.

3. The receiver of claim **1**, wherein the frequency range of the signal spectrum is organized into a plurality of frequency bins and wherein at least one coarse-tune analog mixing signal is associated with each frequency bin.

4. The receiver of claim **3**, wherein the analog mixing signal selected for output by the LO circuitry is an analog mixing signal associated with the bin within which the desired channel falls.

5. The receiver of claim **4**,

wherein a different analog mixing signal is selected by the LO circuitry if the desired channel overlaps the analog mixing signal associated with the bin within which the desired channel falls.

6. The receiver of claim **3**, further comprising configuring the frequency bins not to overlap.

7. The receiver of claim **3**, farther comprising configuring the frequency bins such that one or more of the frequency bins overlap in frequency ranges.

8. The receiver of claim **7**,

further comprising organizing the overlapping frequency bins as two sets of non-overlapping frequency bins, the first set overlapping the second set.

9. The receiver of claim **1**, wherein the digital fine tune circuitry comprises a wide-band analog-to-digital converter having the coarsely tuned signal spectrum as an input and having digital signals as an output, and further comprising a tunable digital filter configured to tune the desired channel.

10. The receiver of claim **1**, wherein the digital fine tune circuitry comprises a narrow-band tunable bandpass analog-to-digital converter configured to tune the desired channel and to convert the coarsely tuned signal spectrum to digital signals, and further comprising a tunable digital filter to further tune the desired channel.

11. The receiver of claim **1**, wherein the controlled oscillator utilizes an RC-based resonant structure.

12. A satellite set-top box for tuning a program channel within a satellite signal spectrum, comprising:

a receiver configured to receive a satellite signal spectrum including a plurality of transponder channels and to tune a transponder channel within the signal spectrum, each transponder channel including a plurality of program channels, comprising:

local oscillator (LO) circuitry having a channel selection signal as an input and having a coarse-tune analog mixing signal as an output, the output mixing signal being selected from a plurality of predetermined output mixing signals depending upon a desired channel to be tuned;

analog coarse tune circuitry having the coarse-tune analog mixing signal as an input and having a signal spectrum as an input, the signal spectrum including a plurality of channels within a frequency range, and the analog coarse tune circuitry being configured to use the coarse-tune analog mixing signal to output a coarsely tuned signal spectrum such that the desired channel within the coarsely tuned signal spectrum is mixed down to a variable location within a frequency range around DC, the variable location being dependent upon the desired channel and the selected coarse-tune analog mixing signal; and

digital fine tune circuitry having the coarsely tuned signal spectrum as an input and having as an output digital baseband signals for the desired channel; and

a demodulator coupled to receive a digital baseband output signal from the receiver representative of a tuned transponder channel, the demodulator being configured to tune a program channel within the tuned transponder channel and to provide the tuned program channel as an output;

wherein the LO circuitry comprises phase-lock-loop (PLL) circuitry including a phase detector and a controlled oscillator, the phase detector receiving a first signal representative of a reference frequency, receiving a second signal representative of an output frequency of the controlled oscillator, and generating at least one control signal to adjust the output frequency of the controlled oscillator; and

wherein the LO circuitry further comprises control circuitry configured to receive a channel selection signal and to control divider circuitry that provides the first and second signals to the phase detector based upon divided versions of the reference frequency and the output of the controlled oscillator, the control circuitry acting to select the coarse-tune analog mixing signal output by the PLL circuitry.

13. The satellite set-top box of claim **12**, wherein the frequency range of the signal spectrum is organized into a plurality of frequency bins and wherein at least one coarse-tune analog mixing signal is associated with each frequency bin.

14. The satellite set-top box of claim **13**, wherein the analog mixing signal selected for output by the LO circuitry is an analog mixing signal associated with the bin within which the desired transponder channel falls.

15. The satellite set-top box of claim **14**, wherein a different analog mixing signal is selected by the LO circuitry if the desired transponder channel overlaps the analog mixing signal associated with the bin within which the desired transponder channel falls.

16. The satellite set-top box of claim **13**, further comprising configuring the frequency bins not to overlap.

17. The satellite set-top box of claim **13**, further comprising configuring the frequency bins such that one or more of the frequency bins overlap in frequency ranges.

18. The satellite set-top box of claim **12**, wherein the digital fine tune circuitry comprises a wide-band analog-to-digital converter having the coarsely tuned signal spectrum as an input and having digital signals as an output, and further comprising a tunable digital filter configured to tune the desired channel.

19. The satellite set-top box of claim **12**, wherein the digital fine tune circuitry comprises a narrow-band tunable bandpass analog-to-digital converter configured to tune the desired channel and to convert the coarsely tuned signal spectrum to digital signals, and further comprising a tunable digital filter to further tune the desired channel.

20. The satellite set-top box of claim **12**, wherein the controlled oscillator utilizes an RC-based resonant structure.

* * * * *