US 20060031894A1

(19) United States

(12) Patent Application Publication

Petruzzelli

(10) Pub. No.: US 2006/0031894 A1

(43) Pub. Date: Feb. 9, 2006

(54) METHOD AND DEVICE FOR BAND TRANSLATION

(75) Inventor: **Edmund F. Petruzzelli**, Englewood, CO (US)

Correspondence Address:
MORRISON & FOERSTER LLP
755 PAGE MILL RD
PALO ALTO, CA 94304-1018 (US)

(73) Assignee: **Echostar Technologies Corporation**, Englewood, CO

(21) Appl. No.: **11/140,330**

(22) Filed: **May 27, 2005**

Related U.S. Application Data

(60) Provisional application No. 60/575,579, filed on May 28, 2004.

Publication Classification

(51) **Int. Cl.**
H04N 7/173 (2006.01)
H04N 5/44 (2006.01)

(52) **U.S. Cl.** **725/100**; 725/126; 725/131; 348/725; 348/731

(57) **ABSTRACT**

A band translation method and device for selecting two or more desired frequency bands of data and bandstacking the two or more desired frequency bands of data into a single output.

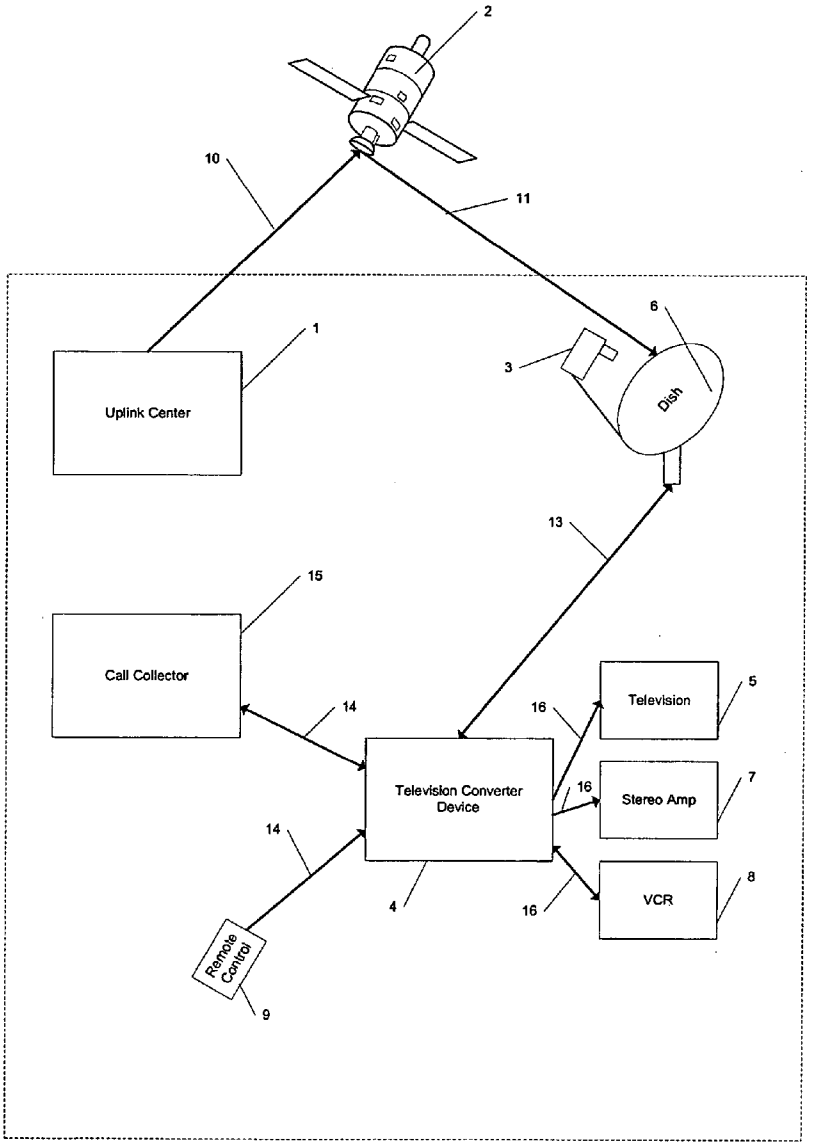

Comcast, Ex. 1140

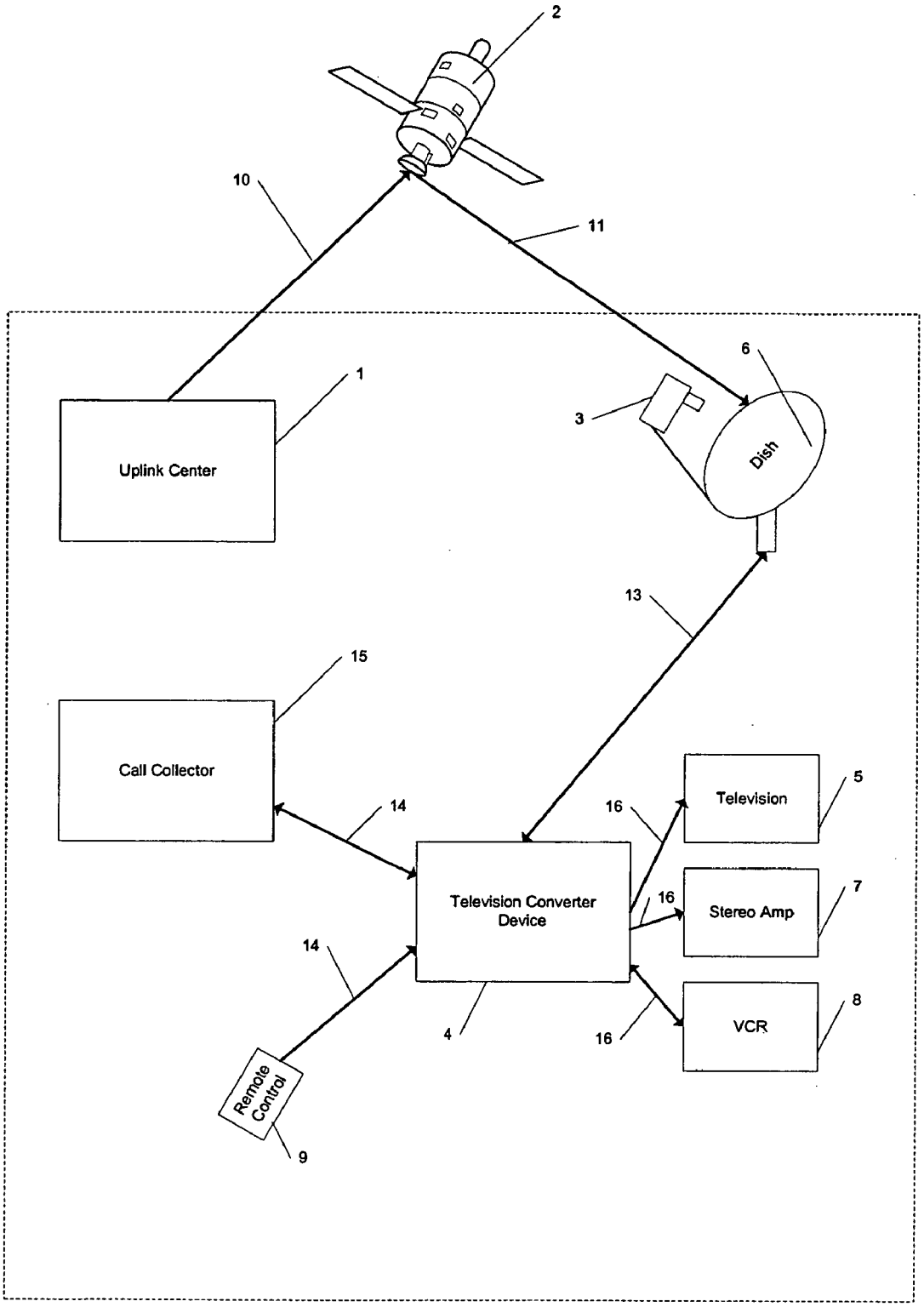
2
10
11
6
1
3
Uplink Center
Dish
13
15
Call Collector
14
16
Television
5
Television Converter Device
16
Stereo Amp
7
14
4
16
VCR
8
Remote Control
9

FIG. 1

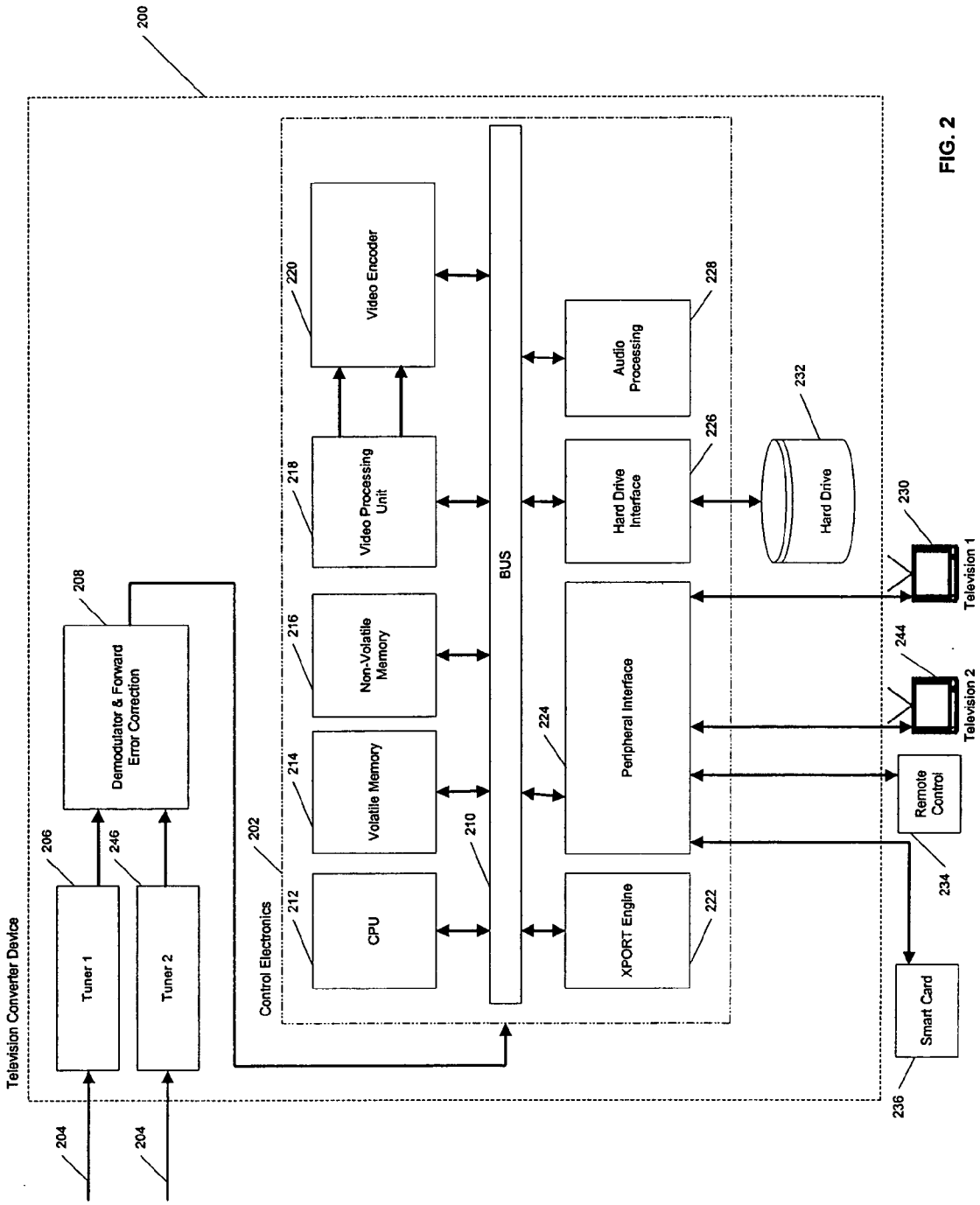
200
Television Converter Device
Tuner 1
Tuner 2
206
246
204
204
Demodulator & Forward Error Correction
208
Control Electronics
202
CPU
212
Volatile Memory
214
Non-Volatile Memory
216
Video Processing Unit
218
Video Encoder
220
BUS
210
XPORT Engine
222
Peripheral Interface
224
Hard Drive Interface
226
Audio Processing
228
Hard Drive
232
Television 1
230
Television 2
244
Remote Control
234
Smart Card
236

FIG. 2

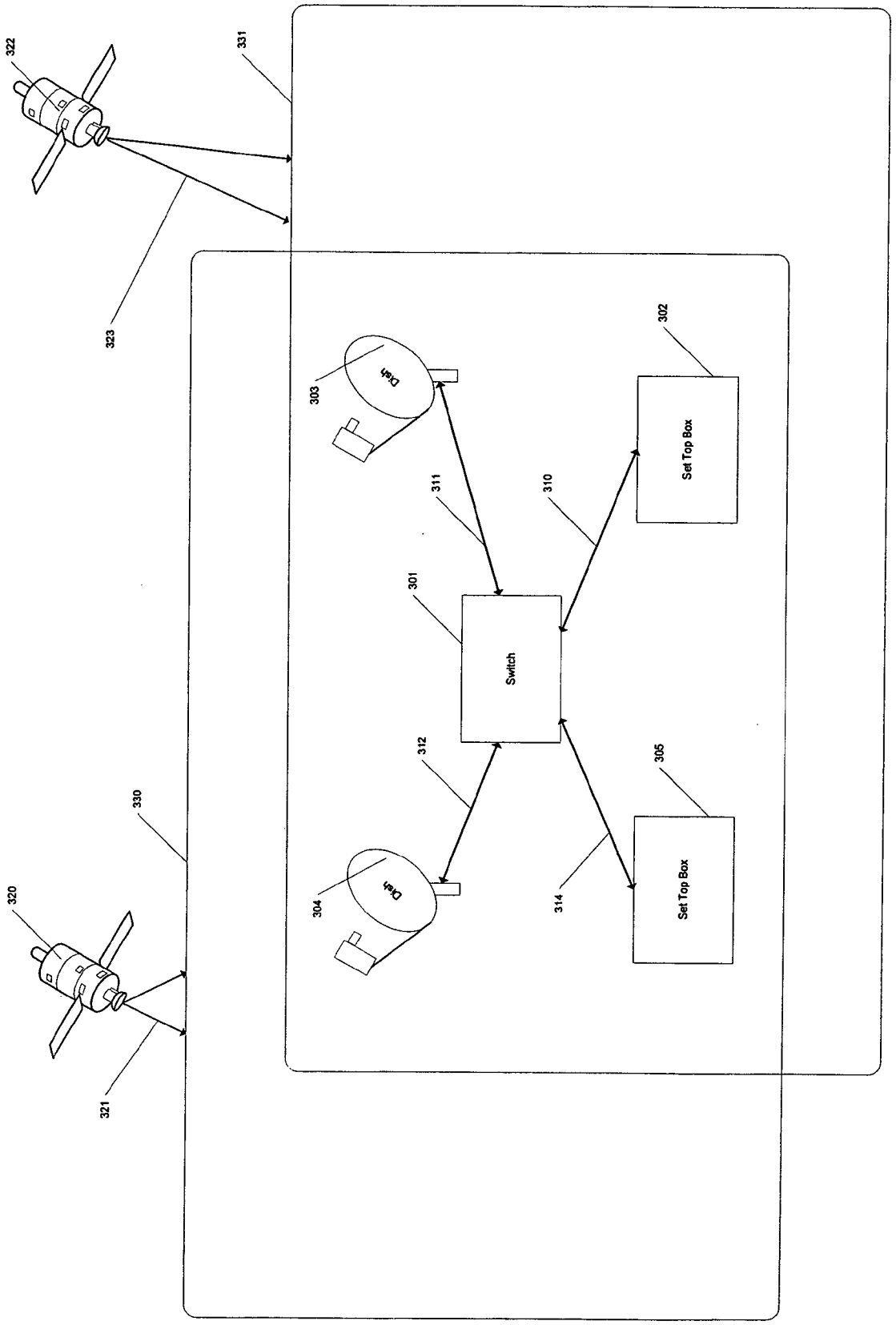
322
331
323
302
303
Dish
Set Top Box
311
310
301
Switch
312
305
330
320
304
Dish
314
Set Top Box
321

FIG. 3

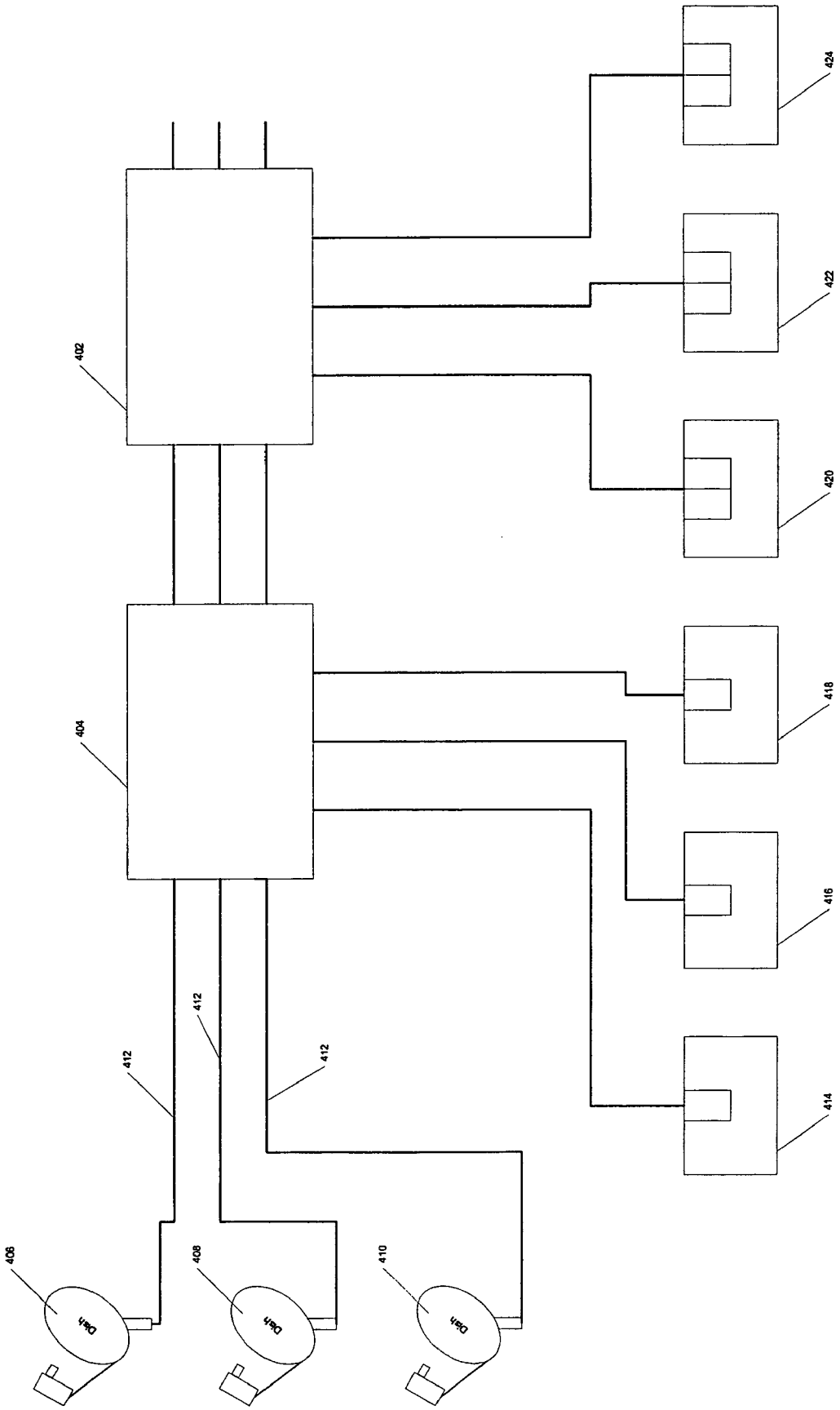
402
404
406
408
410
412
412
412
414
416
418
420
422
424
Dish
Dish
Dish

FIG. 4

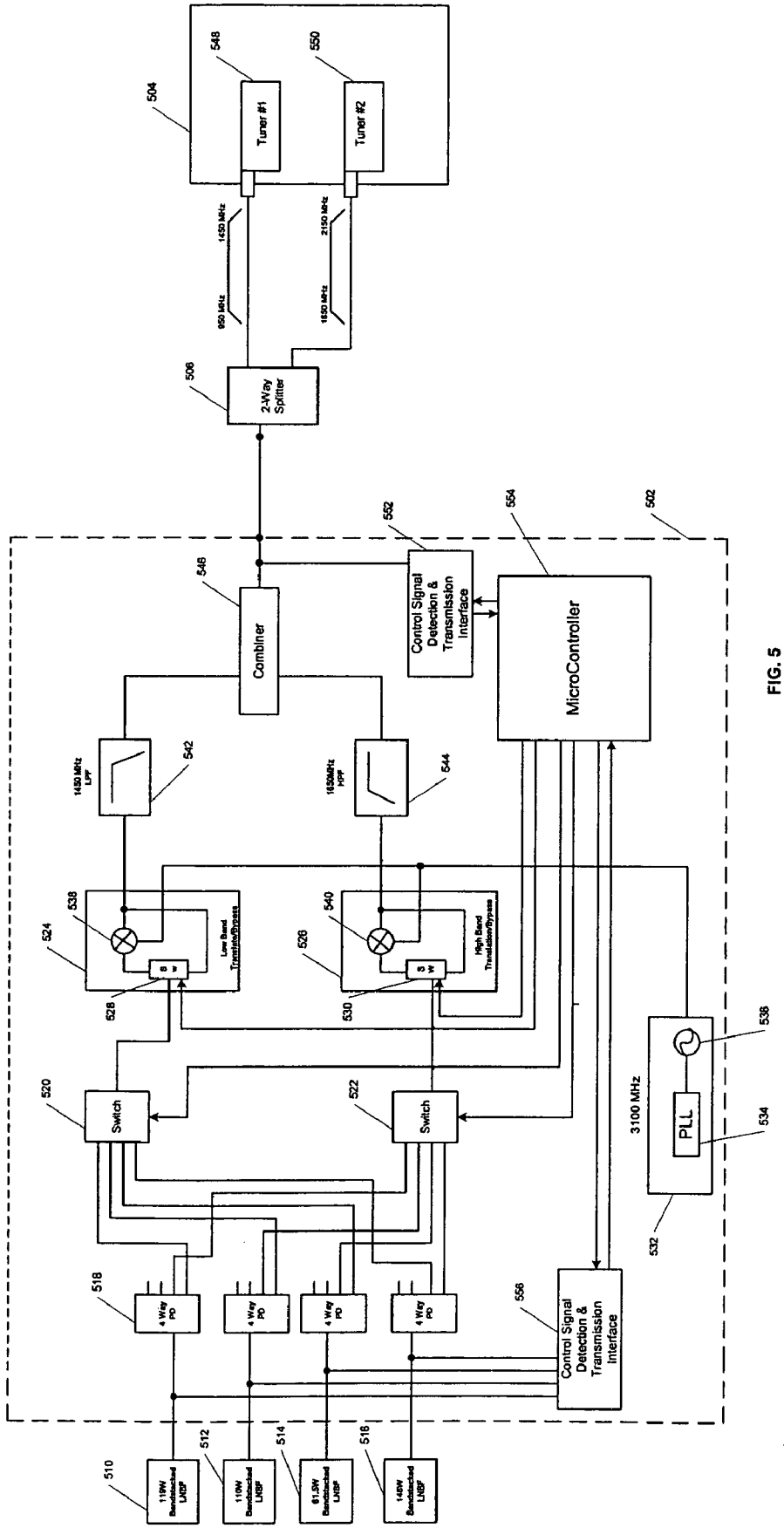
504
548
550
Tuner #1
Tuner #2
1450 MHz
950 MHz
2150 MHz
1650 MHz
506
2-Way Splitter
552
554
502
546
Combiner
Control Signal Detection & Transmission Interface
MicroController
1450 MHz LPF
542
1650MHz HPF
544
538
524
Low Band Translate/Bypass
528
540
526
High Band Translate/Bypass
530
520
Switch
522
Switch
3100 MHz
PLL
536
534
532
518
4 Way PD
556
Control Signal Detection & Transmission Interface
510
512
514
516
110W Bandstacked LNBF
110W Bandstacked LNBF
61.5W Bandstacked LNBF
140W Bandstacked LNBF

FIG. 5

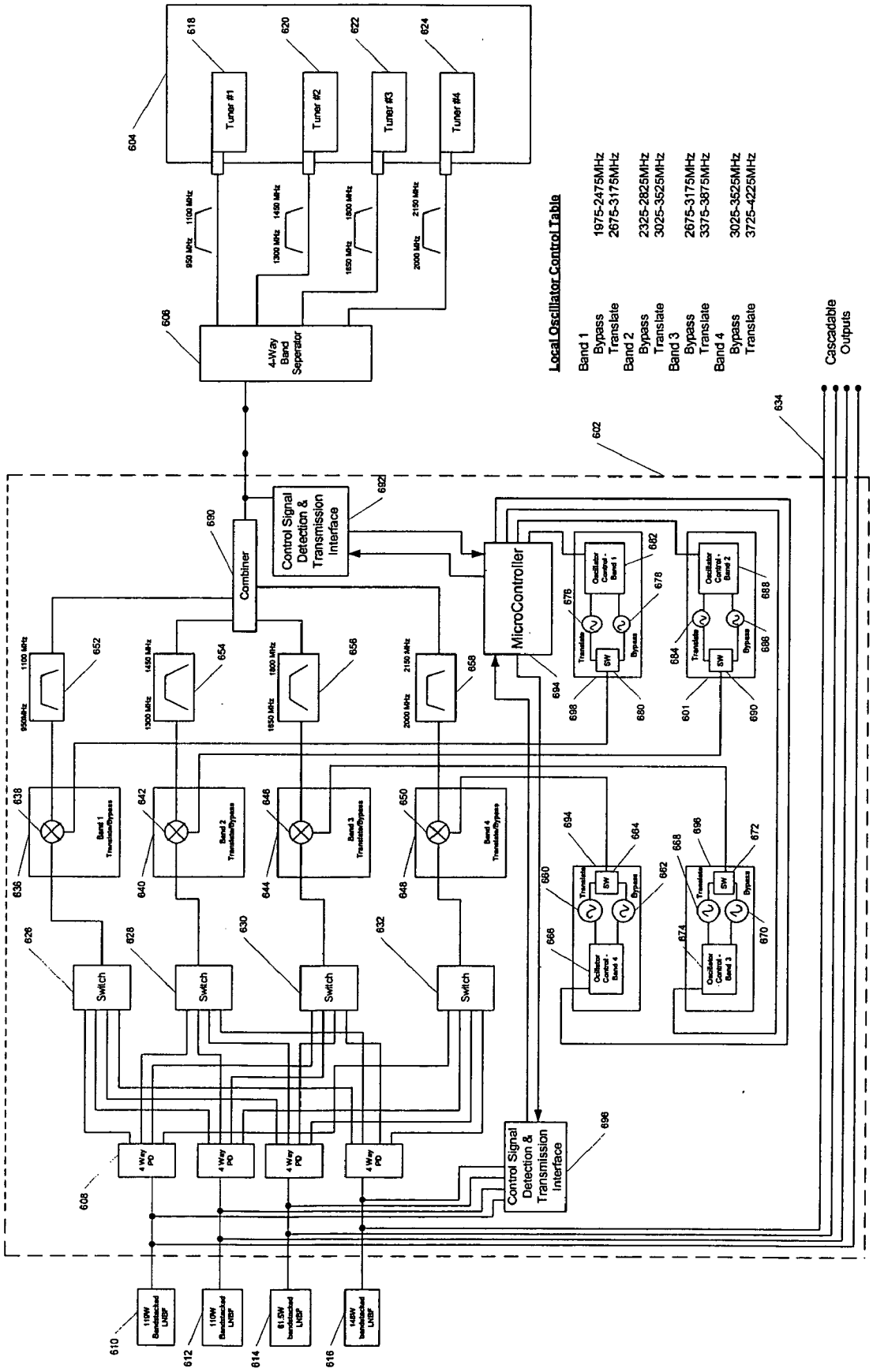
Tuner #1
Tuner #2
Tuner #3
Tuner #4
4-Way Band Seperator
Local Oscillator Control Table
Band 1
Bypass 1975-2475MHz
Translate 2675-3175MHz
Band 2
Bypass 2325-2825MHz
Translate 3025-3525MHz
Band 3
Bypass 2675-3175MHz
Translate 3375-3875MHz
Band 4
Bypass 3025-3525MHz
Translate 3725-4225MHz
Cascadable Outputs
Combiner
Control Signal Detection & Transmission Interface
MicroController
Switch
4 Way PD
Oscillator Control - Band 1
Oscillator Control - Band 2
Oscillator Control - Band 3
Oscillator Control - Band 4
Translate
Bypass
SW

FIG. 6

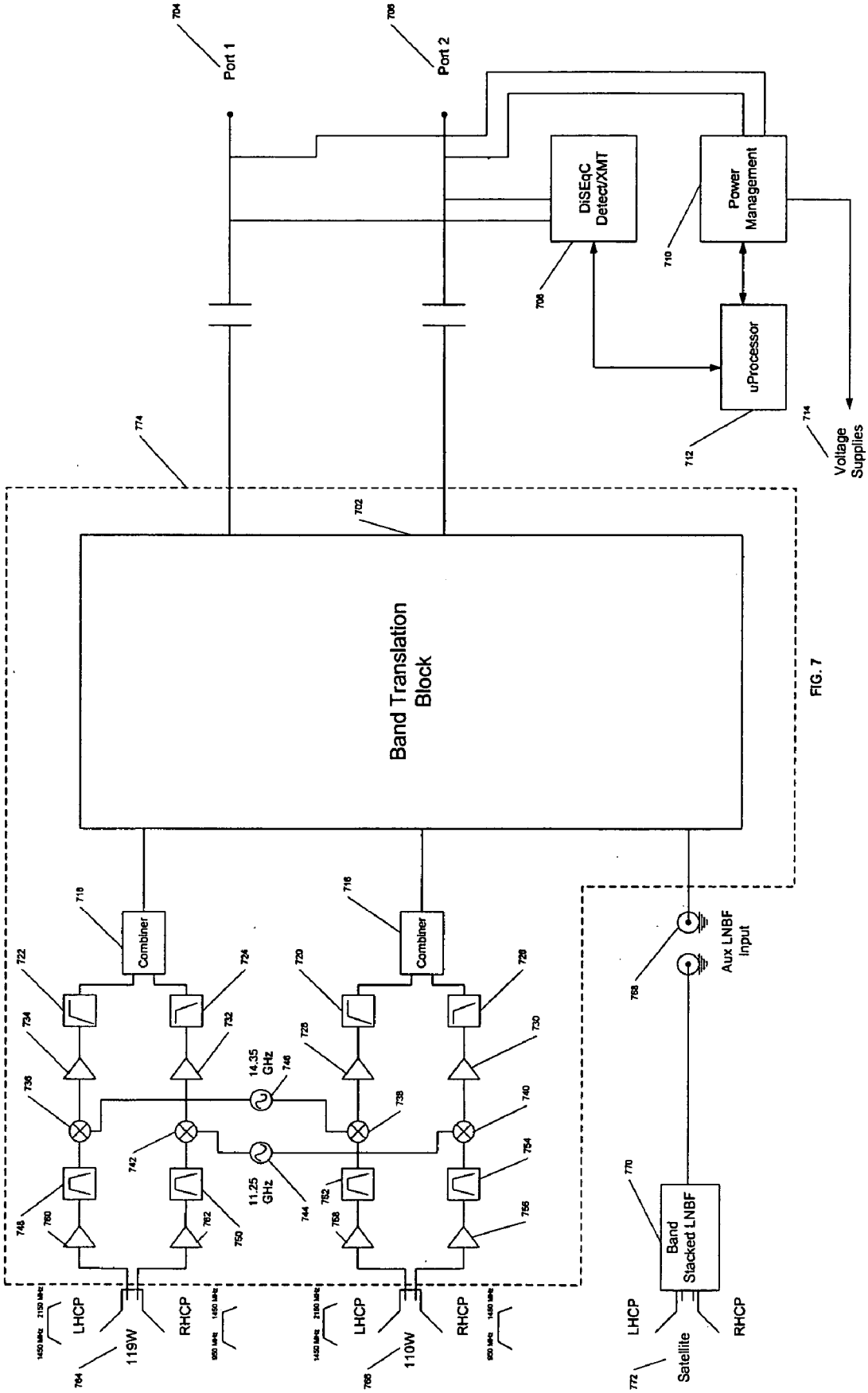
704
Port 1
706
Port 2
DiSEqC Detect/XMT
Power Management
uProcessor
708
710
712
714
Voltage Supplies
774
702
Band Translation Block
716
Combiner
718
Combiner
722
724
720
728
734
732
726
730
736
14.35 GHz
746
738
740
742
11.25 GHz
744
754
748
760
762
750
752
758
756
768
Aux LNBF Input
770
Band Stacked LNBF
LHCP
RHCP
LHCP
RHCP
LHCP
RHCP
764
119W
766
110W
772
Satellite

FIG. 7

METHOD AND DEVICE FOR BAND TRANSLATION

RELATED APPLICATIONS

[0001] This application claims the benefit of U.S. Provisional Application Ser. No. 60/575,579, filed May 28, 2004 and titled BAND TRANSLATION SWITCH, which application is hereby incorporated herein by reference in its entirety.

BRIEF DESCRIPTION OF THE DRAWINGS

[0002] **FIG. 1** illustrates a subscription satellite system in accordance with an embodiment of the present invention.

[0003] **FIG. 2** is a functional block diagram of the logical elements of a television converter device in accordance with an embodiment of the present invention.

[0004] **FIG. 3** is a block diagram of a multi-satellite subscription television system in accordance with an embodiment of the present invention.

[0005] **FIG. 4** is a block diagram of a multiple-satellite system employing single and double tuner television converter devices in accordance with an embodiment of the present invention.

[0006] **FIG. 5** is a block diagram of a multiple-satellite band translating system connected to a dual-tuner television converter device in accordance with an embodiment of the present invention.

[0007] **FIG. 6** is a block diagram of a multiple-satellite band translating system connected to a multiple-tuner television converter device in accordance with an embodiment of the present invention.

[0008] **FIG. 7** is a block diagram of a low noise block converter embodiment employing the band translating system in accordance with an embodiment of the present invention.

DETAILED DESCRIPTION

[0009] In this specification, embodiments of the present invention will be described using methods and systems related to subscriber satellite television service. This detailed description is not limited to any specific embodiment described herein. The present invention may also be applicable to cable television systems, broadcast television systems or other television systems. The present invention is also described in terms of digital video recorder (DVR) devices. The present invention may also be applicable to digital-versatile-disc (DVD) recording devices or other television recording devices. One skilled in the art will recognize that embodiments of the present invention can apply elsewhere. While the invention has been particularly shown and described with reference to embodiments thereof, it will be understood by those skilled in the art that various other changes in the form and details may be made therein without departing from the spirit and scope of the invention.

[0010] As a general matter, the disclosure uses the term "signal." One skilled in the art will recognize that the signal may be any digital or analog signal. Those signals may include, but are not limited to, a bit, a specified set of bits, an A/C signal, or a D/C signal. Uses of the term "signal" in the description may include any of these different interpretations. It will also be understood to one skilled in the art that the term "connected" is not limited to a physical connection but can refer to any means of communicatively or operatively coupling two devices. As another general matter, the disclosure uses the terms "television converter,""receiver, ""set-top-box,""television receiving device,""television receiver,""television recording device,""satellite set-top-box,""satellite receiver,""cable set-top-box,""cable receiver," and "television tuner" to refer interchangeably to a converter device or electronic equipment that has the capacity to acquire, process and distribute one or more television signals transmitted by broadcast, cable, telephone or satellite distributors. DVR and "personal video recorder (PVR)" refer interchangeably to devices that can record and play back television signals and that may implement trick functions including, but not limited to, fast-forward, rewind and pause. As set forth in this specification and the figures pertaining thereto, DVR and PVR functionality or devices may be combined with a television converter. The signals transmitted by these broadcast, cable, telephone or satellite distributors may include, individually or in any combination, internet, radio, television or telephonic data or information. One skilled in the art will recognize that a television converter device may be implemented as an external self-enclosed unit, a plurality of external self-enclosed units or as an internal unit housed within a television. One skilled in the art will recognize that the present invention can apply to analog and digital satellite set-top-boxes.

[0011] As yet another general matter, it will be understood by one skilled in the art that the term "television" refers to a television set or video display that may contain an integrated television converter device (e.g., an internal cable-ready television tuner housed inside a television) or, alternatively, that is connected to an external television converter device (e.g., an external set-top-box connected via cabling to a television). A further example of an external television converter device is the EchoStar Dish PVR 721, Part Number 106525, combination satellite set-top-box and DVR.

[0012] As a general matter, it should also be understood that satellite television signals may be very different from broadcast television or other types of signals. Satellite signals may include multiplexed, packetized, and modulated digital signals. Once multiplexed, packetized and modulated, one analog satellite transmission may carry digital data representing several television stations or service providers. Some examples of service providers include HBO®, CSPAN®, ABC®, CBS®, or ESPN®.

[0013] Finally, the term "channel," as used in this description, carries a different meaning from its normal connotation. The term "channel" is used herein to denote a particular carrier frequency or "sub-band" which can be tuned to by an appropriate tuner. In particular, note that "channel" does not refer to a single program/content service (e.g., CNN®, HBO®, CSPAN®). Similarly, "tuning" herein refers to receiving a channel (as previously defined) having multiple services thereon. A single satellite will typically have multiple transponders (e.g., 32 transponders) each one broadcasting a channel or band of approximately 24 to 27 MHz (0.024-0.027 GHz) in a broader frequency "band" of approximately 500 MHz. Thus a band of 0.5 GHz may contain numerous sub-bands or channels of roughly 24-27

MHz and each channel in turn may carry a combined stream of digital data comprising a number of content services.

[0014] **FIG. 1** illustrates a subscription satellite system in accordance with an embodiment of the present invention. The uplink center **1** of this embodiment transmits a combined stream of audio/video/data (herein more simply termed the "video stream") on the uplink channel **10** to satellite **2**. It should be noted that video streams for a plurality of services (e.g., CNN®, HBO®, CSPAN®) may be multiplexed onto a single uplink channel **10**. In typical direct broadcast satellite (DBS) systems it is not uncommon to have six or more video streams multiplexed onto a single radio frequency channel.

[0015] While transmissions to satellite **2** for purposes of satellite control may be made in another band such as the S-band (1.55-3 GHz), the uplink channel **10** used for the data uplink is most likely (but not necessarily) located within the broad K-band (10.9-36 GHz). Typically, the frequency range used is 17.3-17.8 GHz. DBS data streams are likely to be compressed in order to make maximum use of available bandwidth. More specifically, the MPEG-2 standard for video compression is typically used to encode the video stream into time-sequential data.

[0016] Satellite **2** may then translates the frequency of the signal for rebroadcast as a downlink channel **11**. Satellite **2** may have a number of transponders, each having an assigned frequency sub-band that is typically used to downlink a transport stream. For the downlink, the frequency band of downlink channel **11** may be located within 12.2-12.7 GHZ. Downlink channel **11** creates footprint **12** on the surface of the planet. A footprint **12** is that area in which the downlink channel **11** may be received clearly using inexpensive devices such as dish **6**. The dish **6** is typically a parabolic dish having a diameter of roughly 18 to 36 inches and a generally circular or elliptical planiform shape. While footprint **12** is depicted as a rectangular area in **FIG. 1**, footprint **12** is most likely to be a generally elliptical area many miles across. Dish **6** must be pointed properly if it is to receive the downlink signals. Mechanisms are available to assist in switching between satellites if more than one satellite feed is desired. Satellite **2** may broadcast multiple signals of differing polarity to dish **6**, for example an LHCP signal (left hand circular polarity) and an RHCP signal (right hand circular polarity). Other polarities for broadcast signals are possible. As set forth in the present embodiment, many bands of RF data may be transmitted on a single 0.5 GHz bandwidth.

[0017] Low noise block converter **3** typically then takes the signals concentrated by dish **6**, selects a polarity and translates the frequency of the signal to a lower frequency more suitable for transmission on coaxial cable **13** to television converter device **4**. This lower frequency may, for example, be in the L-band (390 to 1550 MHz) or S-band (1.55 to 3.0 GHz). In this simplified embodiment, coaxial cable **13** may be the only connection between dish **6** and television converter device **4**.

[0018] Television converter device **4** typically demodulates the signal, demultiplexes out the desired service, decodes it from MPEG-2 or other digital format, and reformats it into the appropriate analog or digital video specification (e.g., National Television Standards Committee (NTSC), Phase Alternate Lines (PAL), Advanced Television Standards Committee (ATSC) (also based upon MPEG-2 coding)). Television converter device **4** may then output the signal **16**, as appropriate, to television **5**, stereo amplifier **7**, VCR **8** or other devices. Television converter device **4** may also interact with a call collector **15** via a modem, for example to report pay-per-view purchases, and may also interact with remote control **9** via UHF or IR signals **19**. As explained below, television converter device **4** may perform other functions and be connected to fewer or more devices. One skilled in the art will recognize that many embodiments of television converter device **4** are possible and within the scope of this invention.

[0019] **FIG. 2** provides a high level block diagram for the satellite television converter device **4**, **200** with DVR functionality in accordance with an embodiment of the present invention.

[0020] The signal **13**, **204** that arrives at the satellite STB **200** may undergo extensive processing. The television converter **200** may include one or more tuner devices **206**, **246** that may receive a satellite signal **204**. In one embodiment, tuner device **206**, **246** may acquire one or more satellite signals **204** from satellite television distributor **1**. As explained in this disclosure, each signal **204** may represent a distinct frequency band or source. For example, as more fully set forth by **FIG. 5**, tuner device **206** may receive the 950 MHz to 1450 MHz frequency band, while tuner device **246** may receive the 1650 MHz to 2150 MHz frequency band. Tuner devices **206**, **246** may initially process the satellite signal **204**. Tuner devices **206**, **246** may also receive subscriber commands in the form of signals from control electronics unit **202**. Signals from control electronics unit **202** may include, but is not limited to, a signal to tune to a transponder as part of the process of selecting a certain channel for viewing on a peripheral device. One skilled in the art would recognize that the tuner device **206** may include fewer, more, or different components.

[0021] After receiving the signal **204**, one of the first steps may be to demodulate **208** the signal **204**. The signal **204** may arrive as an analog signal that "carries" data (e.g., data is modulated onto the analog signal). Demodulation **208** may be accomplished by reversing the modulation process. Modulation can be done in several ways. Modulation may include amplitude modulation (AM) or frequency modulation (FM). If the carried data is digital, modulation methods include, but are not limited to, biphase-shift keying (BPSK), quadraphase-shift keying (QPSK), or eight-phase shift keying (8PSK). One skilled in the art will recognize that other methods of modulating and demodulating the signal **204** may be possible. Another one of the first steps may also be to error check **208** signal **204**. One example of error checking **208** is forward error checking (FEC). FEC **208** may include, but is not limited to, inspecting parity bit or bits that may accompany signal **204**. One skilled in the art will recognize that many methods for error checking are possible. For the purposes of discussion, an embodiment using digital data will be discussed below. However, one skilled in the art will recognize that systems with analog data or combined analog and digital data are also possible and contemplated herein.

[0022] In this embodiment, satellite STB **200** contains control electronics unit **202** that receives satellite signal **204**. One skilled in the art will recognize that control electronics

202 may receive other signals, including, but not limited to, signals from a cable or broadcast television distributor. One example of a control electronics unit **202** is the STMicroelectronics STi5517 Low-Cost Interactive Set-top Box Decoder, Part No. 7424736A. In one embodiment, control electronics unit **202** includes discrete electronic components combined into a single circuit with a shared bus **210**. In other embodiments, control electronics unit **202** may be configured differently. For example, one or more of the control electronics unit **202** components in STB **200** may be combined or omitted. The control electronics unit **202** may use a custom ASIC, such as from the LSILogic G11 family, or FPGA, such as from the Altera Stratix™ family. As a further example, one or more of the control electronics unit **202** components in STB **200** may not share a bus **210**, but may nonetheless be operatively connected by some other means. One skilled in the art will recognize that other configurations of STB **200** and control electronics unit **202** are possible and within the scope of this invention. One skilled in the art will further recognize that some components of STB **200** and control electronics unit **202** may be implemented in hardware or software. The control electronics unit **202** may operate under the control of a software program, firmware program, or some other program stored in memory or control logic. One skilled in the art will also recognize that the control electronics unit **202** may include other electronic components or structures to mediate or process signals.

[**0023**] Control electronics unit **202** may contain one or more central-processing-units (CPUs) **212** or processors. One embodiment of control electronics unit **202** contains a single CPU **212** that is operatively connected to the shared bus. In one embodiment, CPU **212** may be used, among other things, for logical operations for STB **200** functions including, but not limited to, channel selection, recording control, EPG display and control and system maintenance. Examples of commercially available CPUs **212** include the STMicroelectronics Enhanced ST20 32-bit VL-RISC, Motorola 68000 or Intel Pentium processors. One skilled in the art will recognize that the CPU **212** may be integrated with memory or other discrete electronics components.

[**0024**] Control electronics unit **202** may contain one or more volatile memory components **214**. Volatile memory components **214** may include, but are not limited to, one or more SDRAM memory chips. Similarly, control electronics unit **202** may also contain one or more non-volatile memory components **216**. Non-volatile memory **216** may include one or more memory chips, including, but not limited to, ROM, SRAM, SDRAM and Flash ROM. One skilled in the art will recognize that volatile memory **214** and non-volatile memory **216** may be integrated within other electronics components. One skilled in the art will also recognize that other memory components may be included within STB **200** and control electronics unit **202**. One skilled in the art will recognize that memory **214**, **216** may be used for many purposes, including, but not limited to, storing EPG data and storing data for use by CPU **212**.

[**0025**] In the present embodiment, signal **204** is in digital form (e.g., a digital stream) after demodulation and error correction. For example, digital stream **204** may use, but is not limited to using, the digital video broadcasting (DVB) transport standard. The digital stream **204** may be multiplexed and therefore require demultiplexing by XPORT Engine **222**. Demultiplexing **222**, or demuxing, may include separating the bits of data into separate digital data streams. The digital streams may be packetized. Thus, the multiplexing of the separate digital data streams may not be bit-by-bit but packet-by-packet. The packet size may vary or may be constant. After demuxing **222** the packets, the separate digital data streams may be reassembled by placing related packets together in a continuous data stream **204**.

[**0026**] Each of the separate digital data streams may also be encoded. Encoding is a method for representing data. Encoding may allow the data to be compressed. Compression can provide the system with increased bandwidth. One skilled in the art will recognize that several different encoding formats are possible. In satellite television, encoding formats may include the MPEG, MPEG2 or MPEG4 standards. Beyond the raw data, the separate digital data streams may include forward error correction, headers, checksums, or other information. All of this different information may be included in the digital television signal **204** processed by the satellite STB **4**. Control electronics unit **202** may therefore include one or more video processing units **218** that, among other video processing operations, may decode encoded signal **204**. In one embodiment, video processing unit **218** may include, but is not limited to, a graphics processor, MPEG-2 decoder and a display compositor with separate on-screen display (OSD) control for peripheral devices. One skilled in the art will recognize that video processing unit **218** may also include other electronics, including, but not limited to, alpha blending, antialiasing, antiflutter and antiflicker filters, memory and video-rendering components.

[**0027**] Another discrete electronic component of control electronics unit **202** may be a video encoder unit **220**. Video encoder unit **220** may work in combination with or independently from video processing unit **218**. Video encoding unit **220** may encode digital stream **204** for output to one or more peripheral devices, including, but not limited to, a television. For example, video encoding unit **220** may encode digital stream **204** for RGB, CVBS, Y/C and YUV outputs. Encoding may allow program data to be compressed. In one embodiment, video encoder **220** may translate digital stream into a signal using the NTSC, PAL or SECAM standards. One skilled in the art will recognize that video encoder unit **220** may include other functionality, may be integrated into other electronic components of satellite STB **200**, and may encode digital stream **204** using other standards, including, but not limited to, MPEG and MPEG2.

[**0028**] Control electronics unit **202** may also include one or more storage interfaces or hard drive interfaces **226** and storage devices or hard drives **232**. In one embodiment, television converter device **200** contains one hard drive interface **226** and hard drives **232**. Hard drive **232** may be used for many purposes, including, but not limited to, storing recorded programs, buffering currently-playing programs (e.g., buffering a program may allow a user to pause or rewind a program), storing EPG data, storing commands or functions for the control electronics unit **202**, storing timers or record events, and storing data for other devices within or connected to the satellite STB **200**. In the embodiment of **FIG. 2**, the connection to the storage device **232** is shown to illustrate the capability of the STB **200** to store television programming as temporary and persistent recordings. In the embodiment the storage device **232** provides the long-term storage functionality of the STB (i.e. records and stores persistent recordings and may also include operating

system software and other data or software necessary to the STB **200**) and the short-term storage functionality (i.e. records and stores temporary recordings). The storage device **232** may include, for example, one or more devices, such as hard drives, as well as supporting hardware and software. In the embodiment of **FIG. 2**, all temporary and persistent recordings are located on the storage device **232**. In the embodiment shown, the hard drive **232** comprises an 80 GB 'winchester' hard drive connected to the control electronics via a standard IDE/EIDE interface cable. As another example, hard drive **232** may be used to temporarily store data for processing by CPU **212**. In this example, the hard drive **232** may allow the processor **212** to separate EPG data arriving as part of digital stream **204**. One skilled in the art will recognize that other storage devices and interfaces may be substituted for hard drive interface **226** and hard drive **232** and are within the scope of this invention. One skilled in the art will also recognize that hard drive interface **226** and hard drive **232** may separately or together include an integrated memory (e.g., a memory buffer, commonly known referred to as cache) and additional processing components or logic. One skilled in the art will also recognize that hard drive interface **226** may be integrated into peripheral interface **224** (described below). Finally, one skilled in the art will recognize that hard drive **232** may be external and connected to satellite STB **200**. For example, an external hard drive **232** may be connected to satellite STB **200** using USB 2.0 or IEEE 1394 (FireWire) connections. Such an external hard drive may include a screen for portable viewing of programming stored on it. Furthermore, in embodiments of the present invention, the storage device **232** contains expansion slots, such as IDE connections, for the provision of additional storage devices to provide additional capacity at a later time. In addition, some embodiments include connections for external storage devices such as DVD-Rs that provide the capability of using the external devices as if they were an internal storage device. The design and operation of hard drives and similar devices are well known in the art and need not be described further here.

[**0029**] An audio processing unit **228** may also be part of the control electronics unit **202**. Audio processing unit **228** may decode the digital stream **204** for output to peripheral devices, including, but not limited to, a stereo, television speakers or portable audio or video players. For example, audio processing unit **228** may decode MPEG-1 layers I/II and layer III, Dolby Digital, Dolby ProLogic, SRS/TruSurround encoded audio in digital stream **204**. Audio processing unit **228** may include one or more processors, memory components or digital to audio converter (DAC) systems. One skilled in the art will recognize that other audio processing components and functionality may be accomplished using audio processing unit **228**.

[**0030**] A satellite STB **200** may be connected to one or more peripheral electronic devices through peripheral interface **224**. These peripheral devices may include a stereo, television **230**, smart card **236**, VCR, or other devices. In one embodiment, satellite STB **200** is connected to two or more televisions **230**, **244**. Televisions **230**, **244** may serve many purposes, including, but not limited to, displaying television programming, displaying one or more signals processed by one or more tuner devices **206**, **246**, displaying the EPG, displaying timer conflicts, and displaying other types of data, graphics and programming. Peripheral devices may receive and/or send signals from the satellite STB **200**. For instance, the televisions **230**, **244** may receive video and audio signals and a stereo may receive only audio signals. A camcorder, on the other hand, may send video or audio signals to the satellite STB **200** or receive audio and video signals from the STB to record. As another example, peripheral interface **224** may include a processor or other electronic components to permit an interface to content security devices such as an external "smart card." In this example, peripheral interface **224** may then encrypt or decrypt content for output to other peripheral devices. Thus, peripheral interface **224** may perform one or more functions for multiple peripheral devices, including, but not limited to, the synchronous or asynchronous transfer of data between different peripheral devices (e.g., decrypting content using a smart card peripheral device and outputting decrypted content to a television at the same time). One skilled in the art will recognize that the peripheral devices may include many types of commercially available electronic devices.

[**0031**] The satellite STB **200** may also include connections to a remote control **9**, **234** peripheral device, also sometimes referred to as a remote. The remote control **234** may be used to send commands to the satellite STB **200**. The remote control **234** may send commands via a wireless connection using, for example, infrared or UHF transmitters within the remote control **234**. One example of an embodiment of a remote controller **234** is the EchoStar Technologies Corporation 721 Platinum Plus Remote, Part Number 121150, that includes an IR transmitter and an ultra high frequency (UHF) transmitter. The remote control **234** may be able to send signals to other peripheral electronic devices, including, but not limited to, a television, stereo, VCR, or DVD player. The STB **200** may also be able to send signals to the remote control **234**, including, but not limited to, signals to configure the remote control **234** to operate other peripheral devices. In some embodiments, the remote control **234** has a set of Light Emitting Diodes (LEDs). Some remote controls may include Liquid Crystal Displays (LCDs) or other screens. The remote control may include buttons, dials, or other man-machine interfaces. While the remote control **234** may often be the common means for a subscriber to communicate with the satellite STB **200**, one skilled in the art will recognize that other means of communicating with the STB **200** are available, including, but not limited to attached keyboards, front panel buttons or touch screens.

[**0032**] The satellite STB **200** may also include a remote control interface. A remote control interface may include any means for the user to communicate to the satellite STB **200**, and may be implemented using the peripheral interface **224** of control electronics unit **202** or by connecting a peripheral remote control interface device. In one embodiment, a remote control interface may receive commands from one or more remote controls **234**. Remote control **234** may use infrared, UHF, or other communications technology. The remote control interface may therefore translate an input from the user into a format understandable by the control electronics unit **202**. The translation systems may include, but are not limited to, electronic receivers and electronic relays. One skilled in the art will recognize that other means to receive and translate user inputs are possible.

[**0033**] Another peripheral device and connection to the satellite STB **200** may include a phone line and modem. STB **200** may use a modem and phone line to communicate

with one or more outside entities or systems (e.g., Call Collector **15**). The phone line may carry local or long-distance telephone service. One skilled in the art will recognize that the phone line may also carry other services, including, but not limited to, DSL service. These communications may include requesting pay-per-view programming, reporting of purchases (for example, pay-per-view purchases), obtaining updates to subscriber programming (e.g., updating EPG data), or receiving updates to software on the satellite STB **200**. For example, the phone line may communicate with the satellite STB **200** using an RJ-11 style telephone connection. One skilled in the art will recognize that there are many other uses for this phone line connection. For example, EPG data may be transmitted to STB **200** via phone line or in the satellite signal **204**. One skilled in the art will recognize that the EPG data may be transmitted to STB **200** by various other methods, systems and outside entities. Also, one skilled in the art will recognize that a phone line connection to satellite distributor **1** may represent other communication connections, including, but not limited to, wireless, Internet, or microwave communications connections. Another function of the phone line may be to periodically receive the EPG data. One skilled in the art will also recognize that a phone line connection may permit networked communications with other network-ready devices using the telephone wiring within a subscriber's location.

[**0034**] A satellite STB **200** may also include network connectivity. For example, peripheral interface **224** may include components or interfaces that permit the connection of RJ-45 cabling and transmission of TCP/IP traffic to other connected devices. As another example, a wireless router may be attached via peripheral interface **224** to allow wireless local-area-network (WLAN) data communications using a standard wireless networking protocol such as WiMAX, 802.11b or 802.11g. One skilled in the art will recognize that various other network connections to the STB **200** are possible. **FIG. 3** provides a block diagram of a multiple-satellite system employing single and double tuner television converter devices in accordance with an embodiment of the present invention. Satellites **320** and **322** broadcast transport streams **321** and **323** into overlapping footprints **330** and **331**. Note that satellites **320** and **322** may broadcast on the same or overlapping frequencies if they are in different orbital slots. However, in an efficient system, satellites **320** and **322** will provide different or substantially different programming services. Dishes/LNBFs **303** and **304** are each pointed and electronically configured so as to receive broadcasts from one each of satellites **320** and **322**. The same result can be achieved using a single dish/multi-LNBF (not shown) configured so as to receive in one dish the signals of two or more satellites: such systems are on the market, one example is the Dish **500** system, a product and registered trademark of the Echostar Technologies Corporation.

[**0035**] Switch **301**, a source selection switch, is used by the television converter devices **302** and **305** to switch between dish/LNBFs **303** and **304**. Each of dish/LNBFs **303** and **304** function as the source of one orbital position programming. The present invention is an improved switch allowing a single coaxial line (either **310** or **314**) to simultaneously provide content/programming services selected from both dish **303** and **304**. One skilled in the art will recognize that the invention is not limited to combining content/programming from only two satellites.

[**0036**] As discussed previously in relation to **FIG. 1**, satellite **2** will be sending an extremely wide bandwidth of data. Switch **301** and the tuner(s) in television converter device **200** (see **FIG. 2**) combine to select the appropriate transponder sub-band. Based upon DiSEqC 2.0 protocols received from the television converter device, for example, switch **301** will select the appropriate satellite and band/polarization having the desired programming content contained within it. One skilled in the art will recognize that other control methods are possible. This signal is sent to the appropriate tuner of the television converter device by means of the invention, and the tuner of the television converter device will select first the correct RF transponder sub-band and then the correct content service from among the services (typically 6-12) contained within the sub-band.

[**0037**] **FIG. 4**, provides a block diagram of a multiple-satellite system employing single and double tuner television converter devices in accordance with an embodiment of the present invention. Signals from one or more satellites (not necessarily a minimum or maximum of three satellites) are received by satellite dishes **406**, **408** and **410**. Thus, each of satellite dishes **406**, **408** and **410** functions as a source. For purposes of the appended claims, a source is defined to be a source of a plurality of frequency bands of RF data. Satellite dish **406** will use coaxial cable **412** to send the desired band (LHCP or RHCP) to ordinary source selection switch **404**, other connections between other pairs of components are made by similar coaxial cables (not numbered). For purposes of this present invention, such coaxial cables are one type of operative connection; more broadly an operative connection is any device which connects two other devices so as to allow a desired frequency band to flow from the first device to the second device. In particular, in addition to coaxial cables and other types of data cables (e.g., microstrip circuitry, IEEE 1394, telephone wires, Ethernet and USB), certain types of devices including low and high pass filters may be operative connections within the meaning of the appended claims.

[**0038**] Ordinary source selection switch **404** is not able to process signals from more than one dish onto a single cable, so single tuner television converter devices **414**, **416** and **418** receive only a single satellite transmission from switch **404**. Even if switch **404** is able to bandstack signals from a single satellite, then multiple tuner television converter devices could be used in place of single tuner television converter devices **414**, **416**, and **418**, thus offering PIP/multiple display capability from any two channels present on a single satellite, but not offering multiple satellite PIP/multiple display capability, as the present invention does. In this example, offering PIP/multiple display capability from any two channels present on a single satellite requires two separate cables from switch **404**. Switch **404** also connects each dish signal to band translation switch **402**, and potentially to devices such as other switches of either type thereafter.

[**0039**] Band translation switch **402**, however, as an embodiment of the present invention, is able to select any two bands from any combinations of satellites and dishes and stack them according to commands from television converter devices **420**, **422** and **424**. Thus band translation

switch may advantageously be used with double tuner television converter devices **420**, **422** and **424**. While television converter devices **420**, **422** and **424** are portrayed as being dual/double tuner devices, the technique is obviously scalable with additional levels of bandstacking, more tuners per television converter device and so on.

[**0040**] As band translation switch **402** provides each tuner in multiple tuner television converter devices **420**, **422** and **424** with a set frequency band (for example, 950 MHz to 1450 MHz) within which the television converter device can find the desired programming, control electronics **202** need not be reprogrammed to accept a new band each time the user changes service. This saves a great deal of processing and reset time on the part of the television converter device.

[**0041**] **FIG. 5** presents a block diagram of a multiple-satellite band translating system connected to a dual-tuner television converter device in accordance with an embodiment of the present invention. **FIG. 6** then presents a block diagram of a multiple-satellite band translating system connected to a multiple-tuner television converter device in accordance with another embodiment of the present invention. One skilled in the art will recognize that **FIGS. 5 and 6** represent only two examples of the n-number of tuner configurations that are possible using band translation technology. One skilled in the art will also recognize that n-number of tuner configurations do not require an even number of tuners and that band translation for an odd number of tuners is also possible and within the scope of this invention. One skilled in the art will further recognize that the n-number of tuners may reside in devices (e.g., a personal computer) other than a television converter device in the form of a satellite STB.

[**0042**] Band translation switch **502** is connected to dual tuner television converter device **504** via separator **506**. Cascade outputs **558** from band translation switch **502** allow band translation switch **802** to be connected with other band translation switches or conventional switches in a manner similar to the embodiment previously discussed with reference to **FIG. 4**.

[**0043**] Band translation switch **502** receives RF input from four satellite dishes **510**, **512**, **514** and **516**. Band translation switch **502** might be connected to a lesser or greater number of such satellite dishes. In the embodiment shown in **FIG. 5**, each satellite dish points to a different satellite. Dish **510** points to a satellite located at 119 degrees west longitude, dish **512** points to a satellite located at 110 degrees west longitude, dish **514** to a satellite located at 61.5 degrees west longitude and dish **516** to a satellite located at 148 degrees west longitude. All four satellites in this particular embodiment are in geosynchronous orbit (zero degrees latitude, low or zero eccentricity and 40,000 kilometer orbital radius with no relative angular velocity relative to a point on the surface of the Earth), however, should DBS systems evolve to include the ability of satellite dishes to track moving satellites (for example, the Molniya system) the band translation switch **502** of the invention may still be used without alteration. The band translation switch **502** of the invention may also be used without alteration in other television systems or communication systems now known or later developed, as circumstances require.

[**0044**] The output from exemplary dish **510** is sent to power divider **518**. In the embodiment depicted in **FIG. 5**, power divider **518** is a four way power divider, supporting a total of 4 tuners, for example, two television converter devices each having dual tuners. However, the power dividers of band translation switch **502** may be scaled from 4 outputs to 6, allowing switch **502** to support up to 6 tuners, such as would be present in a three dual-tuner television converter device system.

[**0045**] The outputs from the power dividers such as power divider **818** are sent to source selection switches **520** and **522**. In one embodiment, two additional source selection switches (not pictured) are also present in band translation switch **502**. Every source selection switch receives the signals from every satellite dish **510**, **512**, **514**, and **516**, in this embodiment. Note that since the signals received are polarized (left-hand, right-hand, vertical, horizontal or other polarization), each dish is actually bandstacking and sending to the source selection switches **520**, **522** two pre-stacked bands of data. Thus in this embodiment source selection switch **520**, for example, may be receiving up to eight **0.5** GHz wide bands of data (two bands per satellite dish) but will be selecting the output from one satellite only (2 bands of data) for transmission to the next stage of processing.

[**0046**] The output from source selection switch **520** goes to low band translator **524**. LBT **524** includes signal path signal path switch **528** allowing bypass of the low band translation function, depending upon which band of the two pre-stacked bands received from switch **520** is the desirable band. If translation is desired, signal path switch **528** causes band translation at frequency mixer **538**. If translation of the frequency bands is not desired, signal path switch **528** will bypass frequency mixer **538** and the translation function will not occur.

[**0047**] Translation is accomplished in frequency mixer **538** by summation-difference with a 3.1 GHz signal obtained from clock/frequency generator **532**: a phase locked loop **534** and an oscillator **536**. The translated or bypassed band is then passed through low pass filter **542**. LPF **542** ensures that the signal sent from low band translator **524** is cut off beginning at approximately 1450 MHz. In present embodiment, the operative connection from low band translator **524** to frequency stacker **546** is by way of LPF **542**, with such circuitry, wiring or cables as is in turn required between these components, however, in other embodiments the operative connection may be only circuitry, wiring, coaxial cable or other cabling.

[**0048**] In a like manner, the output from satellite selector switch **522** is sent to high band translator **526**. Switch **530** either sends the signal to frequency mixer **540** (once again driven by local oscillator **536**) or bypasses the high band translation step. The output from high band lo translator **526** is sent to high pass filter **544** which cuts off frequencies below approximately 1650 MHz.

[**0049**] Note that signal path switches **528** and **530** thus have at least two positions: first positions in which signal path switches **528** and **530** are in the circuit and second positions in which signal path switches **528** and **530** cause the band translators **524** and **526** to be bypassed, in which case the band translators **524** and **526** are said to be out of the circuit.

[**0050**] The two signals are combined after LPF **542** and HPF **544** in frequency stacker **546**, then sent to separator

506. Tuner **848** is programmed to accept frequencies from 950 MHz to 1450 MHz while tuner **550** is programmed to accept frequencies from 1650 MHz to 2150 MHz, effectively redividing the signal on that basis. The 0.2 GHz bandwidth between 1450 MHz and 1650 MHz is referred to as a "guard band" and usually contains the quickly degrading frequencies cut off by LPF **542** and HPF **544**: these cut off frequencies may drop by many dB before crossing the guard bandwidth, at which reduced level they do not significantly impact the signal being read by the other tuner.

[**0051**] In operation, tuners **548** and **550** will signal to band translation switch **502** which satellite and polarity on which may be found the desired service for each tuner. Source selection switches **520** and **522** will each select the proper satellite dish, which may be the same or a different dish. Each satellite switch **520**, **522** will pass both bands from the selected satellite (pre-stacked from the different polarity signals sent on the same frequency to the dishes) to the band translators **524**, **526**. Low band translator **524** will determine if the signal to be sent to tuner **548** is already in the lower (950-1450 MHz) band and if so, it will bypass translation and simply send the signal to LPF **542**, which will filter out the higher frequency band. However if the signal is in the higher frequency band of 1650-2150 MHz, then signal path switch **528** will send the signal to frequency mixer **538** to down-convert the frequency of the desired signal to the lower band. (Note that in this event, the undesired lower frequency signal will have its frequency reduced from the lower band to an even lower frequency range (sub 950 MHz), below what tuner **548** recognizes.)

[**0052**] High band translator **526** will carry out the converse process: it will determine if the signal to be sent to tuner **550** is already in the higher band and if so, will bypass high band translation and simply send the signal to HPF **544**. On the other hand, if the signal which is desired by tuner **550** (programmed to accept the higher frequency band) is in the lower frequency band, then switch **530** will send the signal to frequency mixer **540** to up-convert the frequency of the desired signal to the higher range. In this case, the higher of the two bands sent to HBT **526** will be translated to a value above the highest frequency (2.15 GHz) which tuner **550** cannot recognize.

[**0053**] The result is that either tuner may request any frequency band from any satellite and yet receive it in the frequency range for which that tuner has already been programmed, thus eliminating the need for television converter device **504** to accept frequency bands as they arrived from the satellite dishes.

[**0054**] While only one television converter device **504** is shown, band translation switch **502** equipped with 4 way power dividers **518**, for example, that can support two entirely independent dual tuner television converter devices via additional source selection switches, LBT, LPF, HBT, HPF and a frequency stacker. As stated earlier, by means of 6 way power dividers, three dual tuner television converter devices could be supported. One skilled in the art will recognize that several n-tuner configurations are possible.

[**0055**] Note that LPF **542**, HPF **544** and frequency stacker **546** effectively amount to a diplexer. However, band translation switch **502** may have additional circuitry (intermediate band translators, intermediate bandpass filters, etc.) so as to function as a multiplexer; that is, to stack more than two bands into the output frequencies. Such a configuration might require tuners having additional spectrum recognition abilities and/or constraints on the use of coaxial cable (which might have shorter allowable runs, additional features to increase bandwidth or may be replaced with other forms of connection) but would not exceed the scope of the invention as claimed herein. In such a system, as is evident from **FIG. 6**, band translation switch **502** may support more than two tuners in a single television converter device on a single coaxial cable. For example, a first frequency band and a second frequency band of a single coaxial cable may be sub-divided so as to contain two frequency bands in each of the first and second frequency bands. In this example, four tuners in a single television converter device may then receive the four output frequency bands. One skilled in the art will recognize that band translation switch **502** may also be reconfigured to support multiple-tuner television converter device configurations.

[**0056**] In operation, it is possible that the two bands stacked for transmission to the dual tuner television converter device might come from different satellites or the same satellites, or might even be the same band, band-stacked onto itself. The original frequencies of the two bands may even become reversed in the band translation switch. In any embodiment, however, each tuner can receive its desired band in the frequency band it is pre-programmed to receive. Each tuner then performs RF tuning to the appropriate sub-band/channel, demodulating and demultiplexing; and digitally processing the chosen program service from among those program services on the channel.

[**0057**] The control system of switch **502** is also depicted. In operation, control signal detection and transmission interface **552** will detect control signals sent by tuners **548** and **550** and cooperate with microcontroller **554**. In the present two-tuner embodiment, the control signals sent by tuners **548** and **550** will be designated as master and slave. For example, a master or primary control signal may be sent by tuner **548**, while a slave or secondary signal is sent by tuner **550**. Designation of control signals as master and slave may reduce the processing time of the control signal detection and transmission interface **552** and microcontroller **554**. In another embodiment, the control signals sent by tuners **548** and **550** may operate independently. Microcontroller **554** has control authority over signal path switches **528** and **530**, satellite selection switches **520** and **522** and control signal detection and transmission interface **556**. Interface **556** may be a second control signal detection and transmission interface separate from interface **552**, or in alternative embodiments the two structures may be combined. For example, the mere presence or absence of a signal may be used, respectively, to indicate a master or slave primary control signal.

[**0058**] In operation, signals sent from tuners **548** and **550** are used by microcontroller **554** to control the satellite selection switches **520** and **522**; by this structure the appropriate satellite signals are sent to LBT **524** and HBT **526**. Microcontroller **554** also controls signal path switches **528** and **530** independently from each other in order to determine whether band translation occurs in each translator; as a result of this, the band requested by tuners **548**, **550**, arrives at the tuner in the correct frequency band. In addition to signals sent from tuners **548**, **550** to microcontroller **554**, other

signals are sent from tuners **548**, **550** having preambles which indicate that they are to be passed through to the LNBF at the satellite dish.

[**0059**] As set forth earlier, **FIG. 6 a** block diagram of a multiple-satellite band translating system connected to a multiple-tuner television converter device in accordance with an embodiment of the present invention.

[**0060**] Band translation switch **602** is connected to a four tuner television converter device **604** via separator **606**. Cascade outputs **634** from band translation switch **602** allow band translation switch-**602** to be connected with other band translation switches or conventional switches in a manner similar to the embodiment previously discussed with reference to **FIG. 5**.

[**0061**] Band translation switch **602** receives RF input from four satellite dishes **610**, **612**, **614** and **616**. Band translation switch **602** might be connected to a lesser or greater number of such satellite dishes. In the embodiment shown in **FIG. 6**, each satellite dish points to a different satellite. Dish **610** points to a satellite located at 119 degrees west longitude, dish **612** points to a satellite located at 110 degrees west longitude, dish **614** to a satellite located at 61.5 degrees west longitude and dish **616** to a satellite located at 148 degrees west longitude. All four satellites in this particular embodiment are in geosynchronous orbit (zero degrees latitude, low or zero eccentricity and 40,000 kilometer orbital radius with no relative angular velocity relative to a point on the surface of the Earth), however, should DBS systems evolve to include the ability of satellite dishes to track moving satellites (for example, the Molniya system) the band translation switch **602** of the invention may still be used without alteration. The band translation switch **902** of the invention may also be used without alteration in other television systems or communication systems now known or later developed, as circumstances require.

[**0062**] The output from exemplary dish **610** is sent to power divider **608**. In the embodiment depicted in **FIG. 6**, power divider **608** is a four way power divider and supports a total of 4 tuners in a single television converter device. One skilled in the art will recognize, however, that n-number of tuners is possible and that placement of the n-number of tuners need not occur in the same television converter device. For example, two television converter devices may each have dual tuners. Likewise, the power dividers of band translation switch **602** may also be scaled from 4 outputs to 6, allowing switch **602** to support up to 6 tuners, such as would be present in a three dual-tuner television converter device system.

[**0063**] The outputs from the power dividers such as power divider **608** are sent to source selection switches **626**, **628**, **630**, and **632**. Every source selection switch receives the signals from every satellite dish **610**, **612**, **614**, and **616**, in this embodiment. Note that since the signals received are polarized (left-hand, right-hand, vertical, horizontal or other polarization), each dish is actually bandstacking and sending to the source selection switches **626**, **628**, **630**, and **632** four pre-stacked bands of data or a bank of independent polarization bands. Thus in this embodiment source selection switch **626**, for example, may be receiving up to eight 0.5 GHz wide bands of data (two bands per satellite dish) but will be selecting the output from one satellite only (2 bands of data) for transmission to the next stage of processing.

[**0064**] The output from source selection switch **626** goes to low band translator (LBT) **636**. LBT **636** includes frequency mixer **638**. Band translation is accomplished in frequency mixer **638** by summation-difference with a 3.1 GHz signal obtained from low band oscillator unit (LBOU) **698**: a local oscillator path switch **680**, a phase locked translation oscillator **676**, a phase locked bypass oscillator **678** and an oscillator control **682**. Local oscillator path switch **680** allows bypass of the band translation function depending upon the desired band set forth by the oscillator control **682**. If translation is desired by the oscillator control **682**, phase locked translation oscillator **676** translates the signal at a frequency of approximately 2675 MHz to 3175 MHz and returns the signal to frequency mixer **638**. If translation is not desired by the oscillator control **682**, phase locked bypass oscillator **678** bypasses the signal at a frequency of approximately 1975 MHz to 2475 MHz and returns the signal to frequency mixer **638** without band translation of the signal. One skilled in the art will recognize that other band translation and bypass structures are possible within the LBOU. Further, one skilled in the art will recognize that several other translation and bypass signal oscillation frequencies are possible and within the scope of this invention. The translated or bypassed band is then passed through low pass filter (LPF) **652**. LPF **652** ensures that the signal sent from low band translator **636** is cut off at frequencies below approximately 950 MHz and above 1100 MHz.

[**0065**] In a like manner, the output from satellite selector switch **928** is sent to a second band translator (SBT) **640**. SBT **640** includes frequency mixer **642**. Band translation is accomplished in frequency mixer **642** by summation-difference with a 3.1 GHz signal obtained from low mid-range band oscillator unit (LMBOU) **601**: a local oscillator path switch **690**, a phase locked translation oscillator **684**, a phase locked bypass oscillator **686** and an oscillator control **688**. Local oscillator path switch **690** allows bypass of the band translation function depending upon the desired band set forth by the oscillator control **688**. If translation is desired by the oscillator control **688**, phase locked translation oscillator **684** translates the signal at a frequency of approximately 3025 MHz to 3525 MHz and returns the signal to frequency mixer **642**. If translation is not desired by the oscillator control **688**, phase locked bypass oscillator **686** bypasses the signal at a frequency of approximately 2325 MHz to 2825 MHz and returns the signal to frequency mixer **642** without band translation of the signal. One skilled in the art will recognize that other band translation and bypass structures are possible within the LMBOU. Further, one skilled in the art will recognize that several other translation and bypass signal oscillation frequencies are possible and within the scope of this invention. The translated or bypassed band is then passed through low mid-range pass filter (LMPF) **654**. LMPF **654** ensures that the signal sent from SBT **640** is cut off at frequencies below approximately 1300 MHz and above 1450 MHz.

[**0066**] Similarly, the output from satellite selector switch **930** is sent to a third band translator (TBT) **644**. TBT **644** includes frequency mixer **646**. Band translation is accomplished in frequency mixer **646** by summation-difference with a 3.1 GHz signal obtained from high mid-range band oscillator unit (HMBOU) **696**: a local oscillator path switch **672**, a phase locked translation oscillator **668**, a phase locked bypass oscillator **670** and an oscillator control **674**.

Local oscillator path switch **672** allows bypass of the band translation function depending upon the desired band set forth by the oscillator control **674**. If translation is desired by the oscillator control **674**, phase locked translation oscillator **668** translates the signal at a frequency of approximately 3375 MHz to 3875 MHz and returns the signal to frequency mixer **646**. If translation is not desired by the oscillator control **674**, phase locked bypass oscillator **670** bypasses the signal at a frequency of approximately 2675 MHz to 3175 MHz and returns the signal to frequency mixer **646** without band translation of the signal. One skilled in the art will recognize that other band translation and bypass structures are possible within the HMBOU. Further, one skilled in the art will recognize that several other translation and bypass signal oscillation frequencies are possible and within the scope of this invention. The translated or bypassed band is then passed through high mid-range pass filter (HMPF) **656**. HMPF **656** ensures that the signal sent from TBT **644** is cut off at frequencies below approximately 1650 MHz and above 1800 MHz.

[**0067**] Finally, to describe the last translator of this embodiment, the output from satellite selector switch **632** is sent to a high band translator (HBT) **648**. HBT **648** includes frequency mixer **650**. Band translation is accomplished in frequency mixer **650** by summation-difference with a 3.1 GHz signal obtained from high band oscillator unit (HBOU) **694**: a local oscillator path switch **664**, a phase locked translation oscillator **660**, a phase locked bypass oscillator **662** and an oscillator control **666**. Local oscillator path switch **664** allows bypass of the band translation function depending upon the desired band set forth by the oscillator control **666**. If translation is desired by the oscillator control **666**, phase locked translation oscillator **660** translates the signal at a frequency of approximately 3725 MHz to 4225 MHz and returns the signal to frequency mixer **650**. If translation is not desired by the oscillator control **666**, phase locked bypass oscillator **662** bypasses the signal at a frequency of approximately 3025 MHz to 3525 MHz and returns the signal to frequency mixer **650** without band translation of the signal. One skilled in the art will recognize that other band translation and bypass structures are possible within the HBOU. Further, one skilled in the art will recognize that several other translation and bypass signal oscillation frequencies are possible and within the scope of this invention. The translated or bypassed band is then passed through high pass filter (HPF) **658**. HPF **658** ensures that the signal sent from HBT **648** is cut off at frequencies below approximately 2000 MHz and above 2150 MHz.

[**0068**] In the present embodiment, the operative connection from band translators **636**, **640**, **644** and **648** to frequency stacker **690** is by way of LPF **652**, LMPF **654**, HMPF **656** and HPF **658**, with such circuitry, wiring or cables as are in turn required between these components, however, in other embodiments the operative connection may be only circuitry, wiring, coaxial cable or other cabling.

[**0069**] The four signals are combined from LPF **652**, LMPF **654**, HMPF **656** and HPF **658** in frequency stacker **690**; the combined signal then is sent to splitter **606**. Tuner **618** is programmed to accept frequencies from 950 MHz to 1100 MHz, tuner **620** is programmed to accept frequencies from 1300 MHz to 1450 MHz, tuner **622** is programmed to accept frequencies from 1650 MHz to 1800 MHz and tuner **624** is programmed to accept frequencies from 2000 MHz to 2150 MHz. Each tuner **618**, **620**, **622**, and **624** effectively redivides the signal by these frequency programming ranges. The 0.2 GHz bandwidth between 1450 MHz and 1650 MHz, for example, is referred to as a "guard band" and usually contains the quickly degrading frequencies cut off by LMPF **654** and HMPF **656**: these cut off frequencies may drop by many dB before crossing the guard bandwidth, at which reduced level they do not significantly impact the signal being read by the other tuner.

[**0070**] In operation, tuners **618**, **620**, **622** and **624** will signal to band translation switch **602** which satellite and polarity on which may be found the desired service for each tuner. Source selection switches **626**, **628**, **630** and **632** will each select the proper satellite dish, which may be the same or a different dish. Each satellite switch **626**, **628**, **630** and **632** will pass both bands from the selected satellite (pre-stacked from the different polarity signals sent on the same frequency to the dishes) to the band translators **636**, **640**, **644**, and **648**.

[**0071**] LBT **936** will determine if the signal to be sent to tuner **618** is already in the lower (950-1100 MHz) band and if so, it will bypass translation and simply send the signal to LPF **652**, which will filter out the other frequency bands. However if the signal is in a higher frequency band of 1300-1450 MHz, for example, then frequency mixer **638** will down-convert the frequency of the desired signal to the appropriate lower band. Note that in this event, the undesired lower frequency signal will have its frequency reduced from the lower band to an even lower frequency range (sub 950 MHz), below what tuner **618** recognizes.

[**0072**] SBT **640** will determine if the signal to be sent to tuner **620** is already in the lower mid-range (1300-1450 MHz) band and if so, it will bypass translation and simply send the signal to LMPF **654**, which will filter out the other frequency bands. However if the signal is in the higher frequency band of 1650-1800 MHz, for example, then frequency mixer **642** will down-convert the frequency of the desired signal to the appropriate lower band. Note that in this event, the undesired lower frequency signal will have its frequency reduced from the lower band to an even lower frequency range (sub 1300 MHz), below what tuner **620** recognizes.

[**0073**] TBT **644** will determine if the signal to be sent to tuner **622** is already in the higher mid-range (1650-1800 MHz) band and if so, it will bypass translation and simply send the signal to HMPF **656**, which will filter out the other frequency bands. However if the signal is in the higher frequency band of 2000-2150 MHz, for example, then frequency mixer **646** to down-convert the frequency of the desired signal to the appropriate lower band. Note that in this event, the undesired lower frequency signal will have its frequency reduced from the lower band to an even lower frequency range (sub 1650 MHz), below what tuner **622** recognizes.

[**0074**] HBT **648** will carry out the converse process: it will determine if the signal to be sent to tuner **624** is already in the higher band and if so, will bypass high band translation and simply send the signal to HPF **658**. On the other hand, if the signal which is desired by tuner **624** (programmed to accept the higher frequency band) is in a lower frequency band, then frequency mixer **650** will up-convert the frequency of the desired signal to the higher range. In this case,

the higher of the four bands sent to HBT **648** will be translated to a value above the highest frequency (2.15 GHz) which tuner **624** cannot recognize.

[**0075**] The result of the embodiment described above is that either tuner may request any frequency band from any satellite and yet receive it in the frequency range for which that tuner has already been programmed, thus eliminating the need for television converter device **604** to accept frequency bands as they arrived from the satellite dishes.

[**0076**] Note that LPF **652**, LMPF **654**, HMPF **656**, HPF **658** and frequency stacker **690** effectively amount to a multiplexer; that is, more than two bands are stacked into multiple output frequencies. A person skilled in the art would recognize that this multiplexer configuration typically requires tuners to have additional spectrum recognition abilities and/or constraints on the use of coaxial cable (which may have shorter allowable runs, additional features to increase bandwidth or may be replaced with other forms of connection) that are within the scope of the invention as claimed herein. In such a system, as is evident from **FIGS. 5 and 6**, a band translation switch may support more than two tuners in a single television converter device on a single coaxial cable. As is also evident from the drawings, band translation switches may also be reconfigured so as to support one or more single tuner television converter devices from a single coaxial cable carrying a signal from one or more satellite dishes.

[**0077**] The control system of switch **602** is also depicted. In operation, control signal detection and transmission interface **692** will detect control signals sent by tuners **618**, **620**, **622** and **624** and cooperate with microcontroller **694**. In this embodiment, the control signals sent by tuners **618**, **620**, **622** and **624** operate independently. One skilled in the art will recognize that several control signaling paradigms are possible and within the scope of this invention. Microcontroller **694** has control authority over band translation oscillator control **666**, **674**, **682**, **688** and control signal detection and transmission interface **696**. Interface **696** may be a second control signal detection and transmission interface separate from interface **692**, or in alternative embodiments the two structures may be combined.

[**0078**] In operation, signals sent from tuners **618**, **620**, **622** and **624** are used by microcontroller **694** to control the band translation oscillators **660**, **668**, **676**, **684** and bypass oscillators **662**, **670**, **678**, **686**; by this structure the appropriate satellite signals are sent to LBT **636**, SBT **640**, TBT **644** and HBT **648**. In addition to signals sent from tuners **618**, **620**, **622** and **624** to microcontroller **694**, other signals are sent from tuners **618**, **620**, **622** and **624** having preambles which indicate that they are to be passed through to the LNBF at the satellite dish.

[**0079**] In band translation switches **402**, **502**, **602** and **301** at least two switching protocols may be used: proprietary 13/18 switching and the DiSEqC 2.0 protocol. In the former technique, television converter devices send proprietary commands to the band translation switch by varying the length and pattern of the 13 volt or 18 volt potential. Based on the commands sent, the band translation switch selects the appropriate signal to send back to the sending television converter devices. Referring once again to **FIG. 3**, the 13/18 polarity may be passed directly by switch **301** to dish/LNBFs **303**, **304**, or switch **301** may maintain constant polarity. In one embodiment presently contemplated for carrying out the invention, the DiSEqC 2.0 protocol is used. The DiSEqC 2.0 protocol, unlike the 13/18 polarity method, allows for bi-directional communication among the five components of the switching system. Television converter devices **302** and **305** provide the current to operate switch **301** and the LNBFs located at dish/LNBFs **303** and **304**. In other embodiments, switch **301** may be integrated with, included within or housed inside of an LNBF. Under either protocol, television converter devices **302** and **305** are capable of independent operation in which the activities of one box do not effect the activities of the other. Under either protocol, tuners **548**, **550**, **618**, **620**, **622**, and **624** are capable of independent operation in which the activities and band selected by one tuner do not effect the activities of the other.

[**0080**] **FIG. 7** depicts a band-stacked low-noise block converter (LNB) embodiment of the method for band translation. In this embodiment, LNB **774** is connected to band translation block **702** and satellites **764**, **766** that receive, respectively, signals from satellites located at 119 degrees west longitude and 110 degrees west longitude. Dish **764** receives signals that are left-hand circular polarized (LHCP) in the frequency band range of 1650 MHz to 2150 MHz and right-hand circular polarized (RHCP) in the frequency band range of 950 MHz to 1450 MHz. Likewise, dish **766** also receives signals that are left-hand circular polarize (LHCP) in the frequency band range of 1650 MHz to 2150 MHz and right-hand circular polarized (RHCP) in the frequency band range of 950 MHz to 1450 MHz. Alternatively, in another embodiment, Dish **764** may receive signal polarity bands that are not stacked and that comprise a single satellite signal. One skilled in the art will recognize that several satellite orbital locations and radio frequency bands are possible and also within the scope of this invention. LNB **774** is optionally connected via Aux LNBF Input **768** to a band-stacked LNB **770** input.

[**0081**] LNB **774** may include circuitry to maintain signal bands, including amplifiers **760**, **762**, **734**, **732**, **758**, **756**, **728**, **730**. One skilled in the art will recognize that other signal processing circuitry is possible within the LNB and within the scope of this invention. LNB **774** also includes signal frequency mixers **736** and **738** that are connected via local signal oscillator **746**. Local signal oscillator **746**, operating in this embodiment at a signal frequency of 14.35 GHz, band-stacks the recieved LHCP signals **748**, **752** from two independent satellite dishes **764**, **766** into signals **722**, **720**. Similarly, LNB **774** also includes signal frequency mixers **742** and **740** that are connected via local signal oscillator **744**. Local signal oscillator **744**, operating in this embodiment at a signal frequency of 11.25 GHz, band-stacks the recieved RHCP signals **750**, **754** from two independent satellite dishes **764**, **766** into signals **724**, **726**. Frequency stackers **716** and **718** then combine signals **720**, **722**, **724** and **726**. LNB **774** also includes band translation block **702**. Band translation block **702** receives combined signals and processes the requests for specific bands contained within the received signals. One skilled in the art will recognize that other circuit elements and different combinations of existing elements are possible and within the scope of this invention, including non-stacked frequency bands.

[**0082**] Band-stacked output signals from LNB **774** are identified as port **1704** and port **2706**. Port **1704** and port

2706 may be connected to individual or multiple tuners that may request delivery of specific signal bands. Furthermore, the signals carried on output ports **704** and **706** from LNB **774** may also be connected to other RF processing elements, including but not limited to DiSEqC 2.0/XMT switching protocol detection unit **708**, processing unit **712**, voltage supplies **714** and power management unit **710**.

[**0083**] While co-axial cables are mentioned as the transmission means between elements of the invention and between the invention and other elements of the overall DBS system, other methods may be used. For example, microstrip technology may be employed both for communication and for RF circuit elements.

[**0084**] While a number of exemplary aspects and embodiments have been discussed above, those of skill in the art will recognize certain modifications, permutations, additions and sub-combinations thereof. It is therefore intended that the following appended claims and claims hereafter introduced are interpreted to include all such modifications, permutations, additions and sub-combinations as are within their true spirit and scope.

What is claimed is:

1. A band translation switch comprising:

a) at least first and second source selection switches, each one of the first and second source selection switches being operatively connected to each one of a plurality of sources;

b) a low band translator operatively connected to the first source selection switch; the low band translator having a first bypass switch having a first position in which the low band translator is in circuit, the first bypass switch further having a second position in which the low band translator is bypassed;

c) a high band translator operatively connected to the second switch; the high band translator having a second bypass switch having a first position in which the high band translator is in circuit, the second bypass switch further having a second position in which the high band translator is bypassed; and

d) a frequency stacker having a first operative connection to the low band translator and having a second operative connection to the high band translator.

2. The band translation switch of claim 1, wherein the frequency stacker's first operative connection further comprises a low pass filter.

3. The band translation switch of claim 1, wherein the frequency stacker's second operative connection further comprises a high pass filter.

4. The band translation switch of claim 1, wherein each one of the plurality of sources comprises a coaxial cable carrying at least one band of RF data.

5. The band translation switch of claim 4, wherein the coaxial cable carries the at least one band of RF data from a satellite communications device.

6. The band translation switch of claim 1, further comprising:

a) a third operative connection from the frequency stacker to a television converter device having at least a first and second tuner.

7. The band translation switch of claim 6, wherein the third operative connection comprises a separator.

8. The band translation switch of claim 7, wherein the first and second source selection switches are responsive to signals received from the at least first and second tuners.

9. The band translation switch of claim 1, further comprising:

a) one or more cascadable outputs being operatively connected to one or more of the said plurality of sources.

10. A method of supplying channel or program information to at least two tuners using a single coaxial cable, the method comprising:

a) selecting a first channel or program requested by the first tuner;

b) if the first channel or program is not in a low band, down translating the first channel or program;

c) selecting a second channel or program requested by the second tuner;

d) if the second channel or program is not in a high band, up translating the second channel or program;

e) combining the first and second channels or programs on a single output feed whereby the single output feed has a low band and a high band; and

f) sending the single output feed to the first and second tuners.

11. A switching method for use in a system having multiple bands of input, the method comprising:

a) selecting a first input band requested by a first tuner;

b) if the first input band is not in a low band, down translating the first input band;

c) selecting a second input band requested by a second tuner;

d) if the second input band is not in a high band, up translating the second input band;

e) combining the first and second input bands on a single output feed whereby the single output feed has a low band and a high band; and

f) sending the single output feed to the first and second tuners.

12. The switching method of claim 11, wherein the first tuner is pre-programmed to the low band.

13. The switching method of claim 11, wherein the second tuner is pre-programmed to the high band.

14. The switching method of claim 11, wherein the step of down translating the first input band further comprises:

a) passing the first input band through a low pass filter.

15. The switching method of claim 11, wherein the step of up translating the second input band further comprises:

a) passing the second input band through a high pass filter.

16. The switching method of claim 11, further comprising a step g) prior to the step f), wherein step g) comprises:

g) passing the single output feed through a separator.

* * * * *