US007213042B2

(12) **United States Patent**
Cannon

(10) **Patent No.: US 7,213,042 B2**
(45) **Date of Patent: May 1, 2007**

(54) **DIGITAL IF PROCESSING BLOCK HAVING FINITE IMPULSE RESPONSE (FIR) DECIMATION STAGES**

(75) Inventor: **Richard Hollingsworth Cannon**, Mesa, AZ (US)

(73) Assignee: **Comtech EF Data, Inc.**, Tempe, AZ (US)

(*) Notice: Subject to any disclaimer, the term of this patent is extended or adjusted under 35 U.S.C. 154(b) by 0 days.

(21) Appl. No.: **11/247,302**

(22) Filed: **Oct. 11, 2005**

(65) **Prior Publication Data**

US 2006/0031275 A1 Feb. 9, 2006

(51) **Int. Cl.**
G06F 17/10 (2006.01)

(52) **U.S. Cl.** **708/300**

(58) **Field of Classification Search** 708/300
See application file for complete search history.

(56) **References Cited**

U.S. PATENT DOCUMENTS

5,079,734 A * 1/1992 Riley 708/313
5,437,281 A * 8/1995 Lin et al. 600/443
5,511,099 A * 4/1996 Ko et al. 375/368
5,880,687 A * 3/1999 May et al. 341/61
6,279,019 B1 * 8/2001 Oh et al. 708/300
6,470,365 B1 * 10/2002 Rahman et al. 708/313
2004/0107078 A1 * 6/2004 Chiu et al. 703/2

* cited by examiner

Primary Examiner—Tan V. Mai
(74) *Attorney, Agent, or Firm*—Jeffrey D. Moy; Weiss & Moy, P.C.

(57) **ABSTRACT**

A digital Intermediate Frequency (IF) processing block including a decimation filter having Finite Impulse Response (FIR) decimation stages provides improved performance over a Hogenauer decimating filter. The filter comprises multiple integrator stages followed by multiple FIR decimating stages. The zeros of the filter are tunable by adjusting the integer coefficients of the FIR stages providing tunability of the cut-off response, as opposed to the fixed sinc response of the Hogenauer filter. As a result, the number of required stages for a particular steepness is reduced, dramatically reducing the amount of digital circuitry required to implement a particular filter design. The improved filter is especially suitable for use in digital IF stages in receivers, and for code-based applications where selectable decimation rate is desired and a fast multiply is not available.

13 Claims, 5 Drawing Sheets

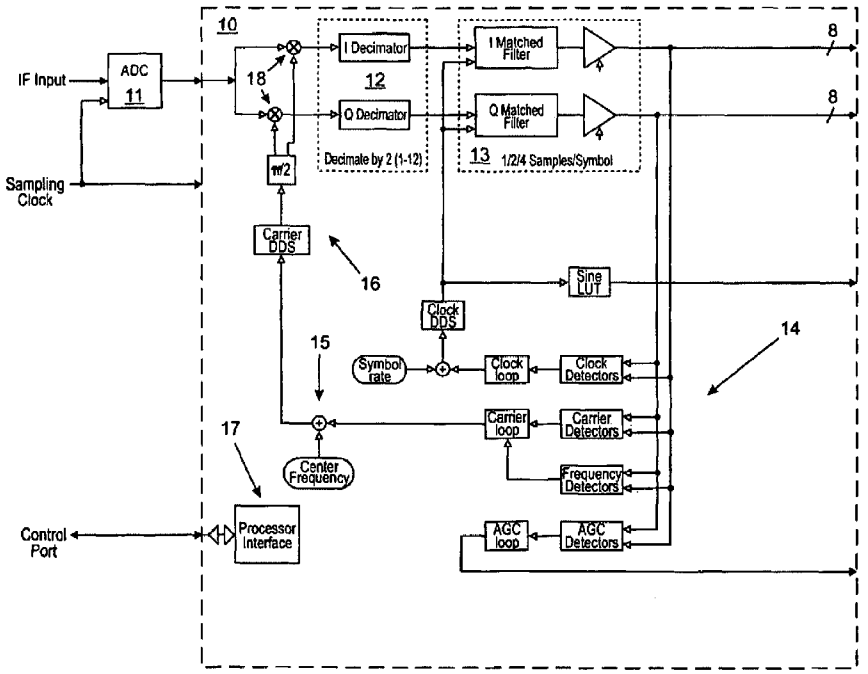

Comcast, Ex. 1146

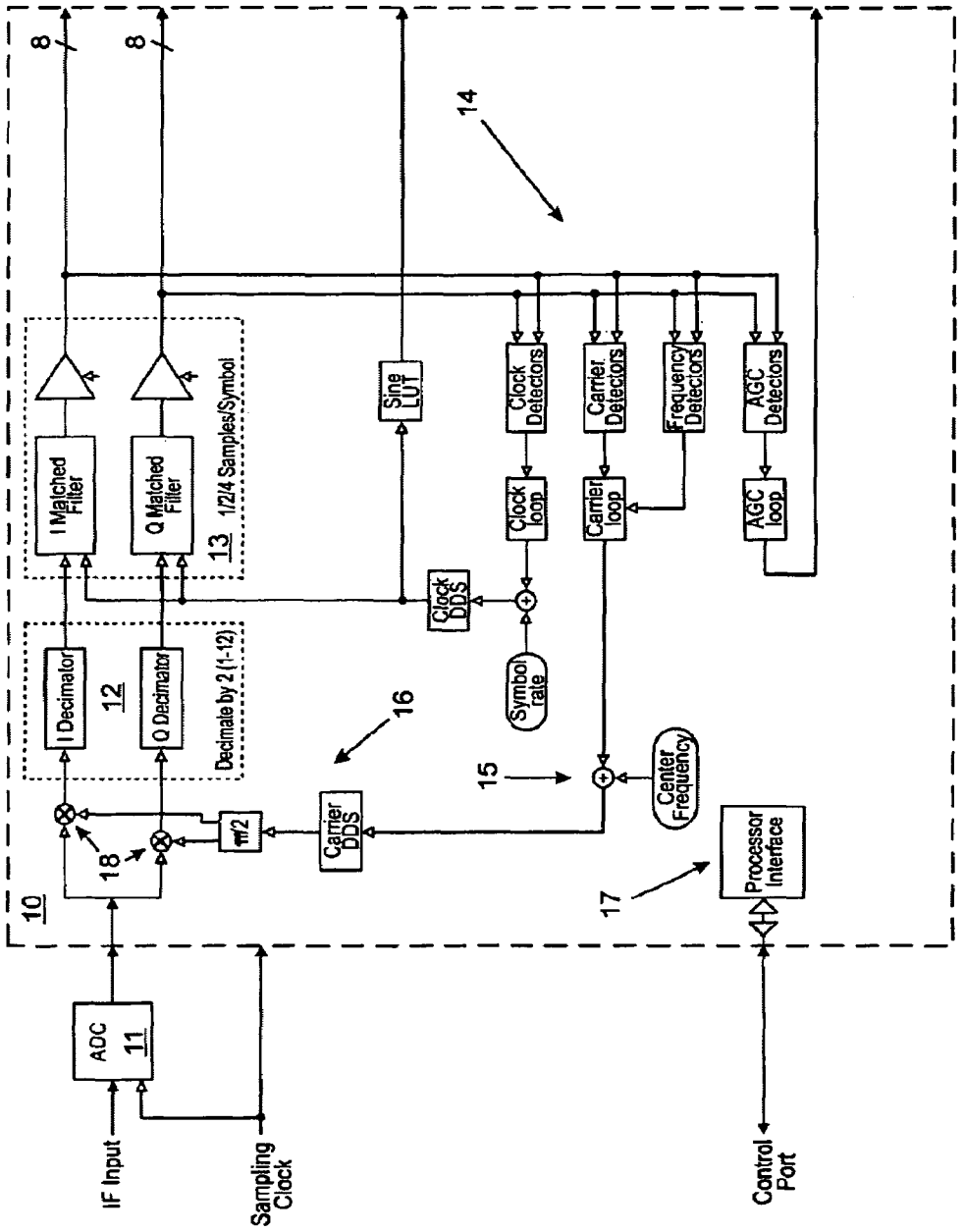
IF Input
ADC
11
Sampling Clock
10
I Decimator
Q Decimator
12
Decimate by 2 (1-12)
I Matched Filter
Q Matched Filter
13
1/2/4 Samples/Symbol
8
8
18
π/2
Carrier DDS
16
Sine LUT
Clock DDS
Symbol rate
Clock Detectors
Clock loop
Carrier Detectors
Carrier loop
Frequency Detectors
AGC Detectors
AGC loop
14
15
Center Frequency
17
Processor Interface
Control Port

Fig. 1

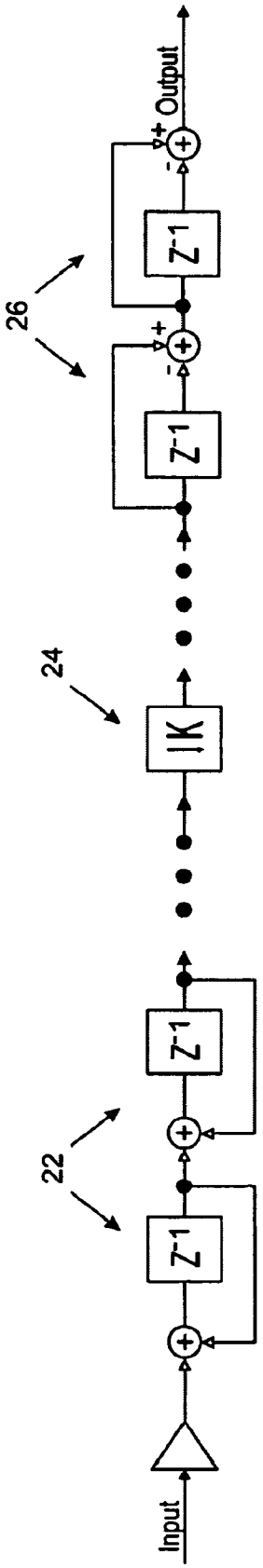

Fig. 2A (Prior Art)

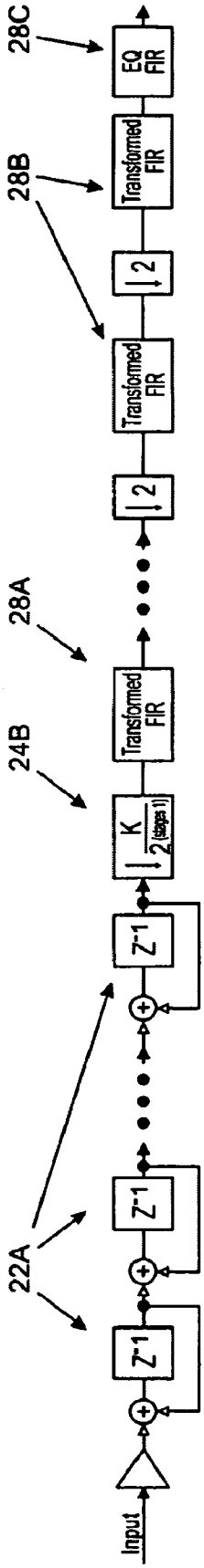

Fig. 2B

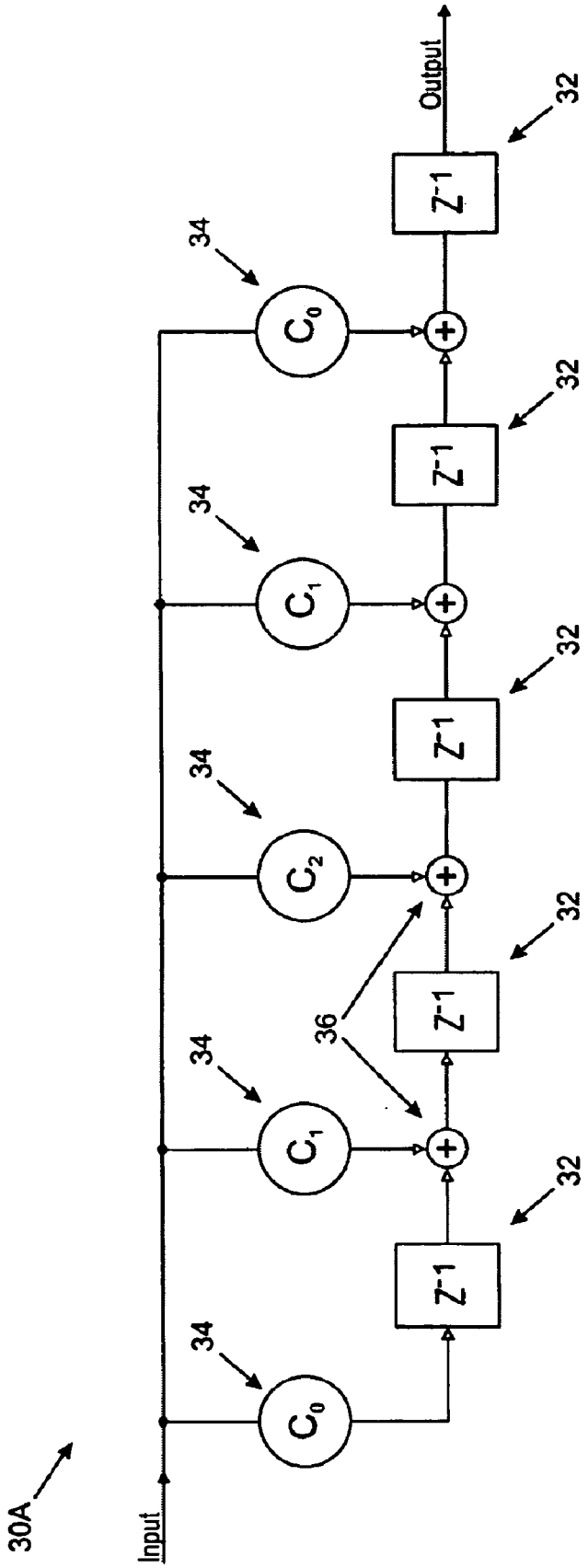

Fig. 3A (Prior Art)

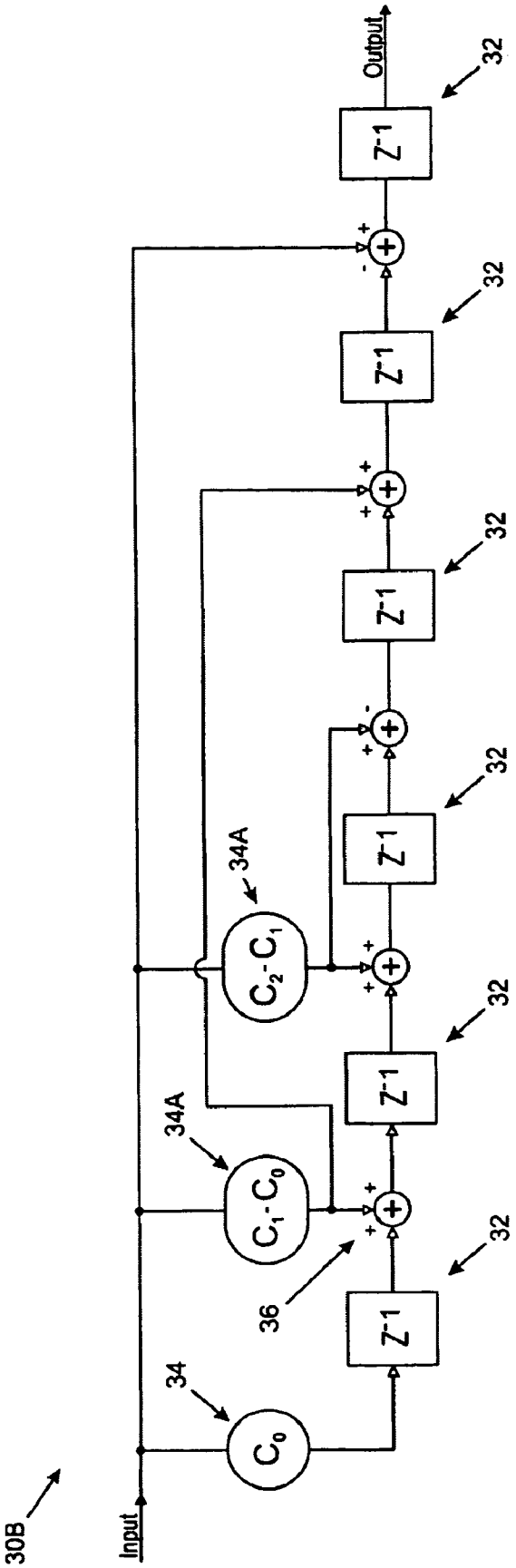

Fig. 3B

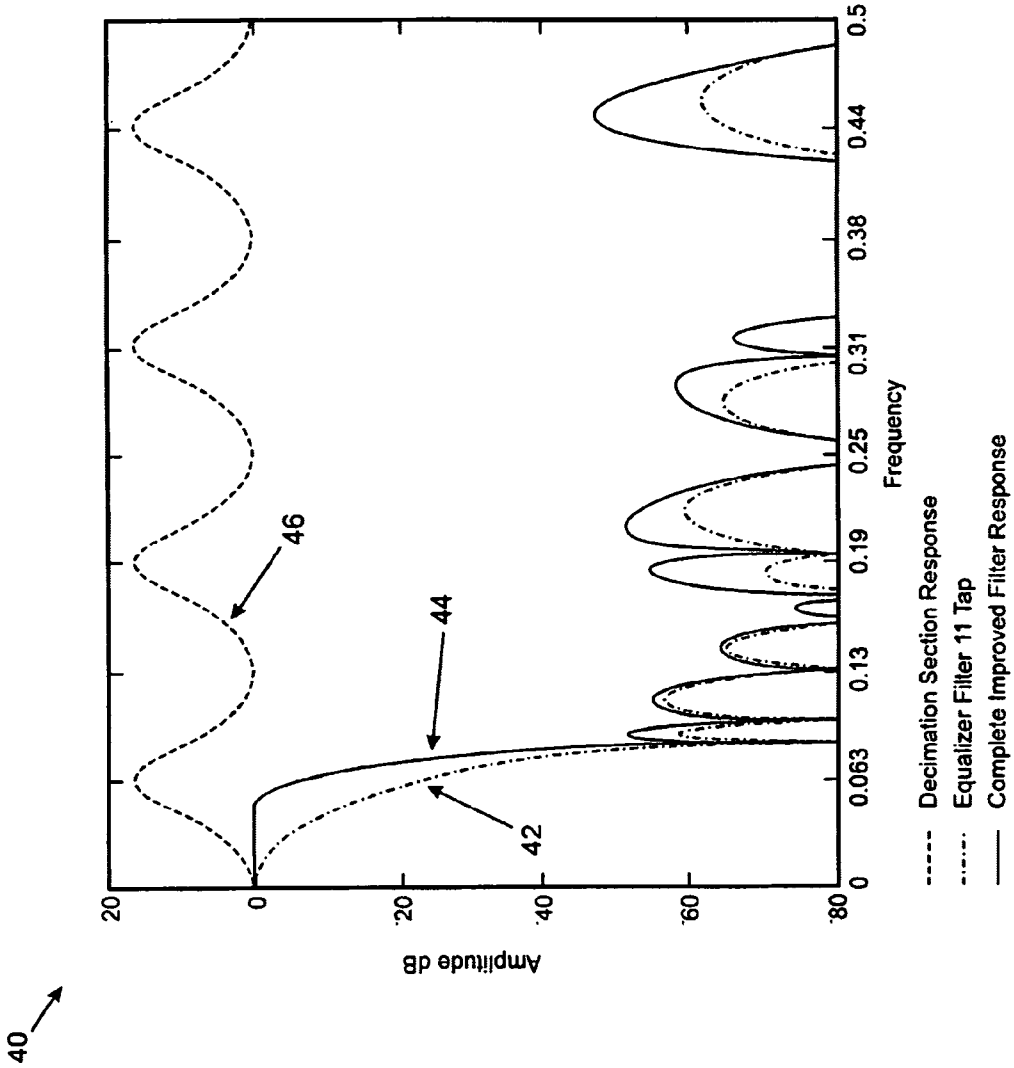
40
Amplitude dB
20
0
-20
-40
-60
-80
0
0.063
0.13
0.19
0.25
0.31
0.38
0.44
0.5
Frequency
42
44
46
Decimation Section Response
Equalizer Filter 11 Tap
Complete Improved Filter Response

Fig. 4

DIGITAL IF PROCESSING BLOCK HAVING FINITE IMPULSE RESPONSE (FIR) DECIMATION STAGES

BACKGROUND OF THE INVENTION

1. Field of the Invention

The present invention relates generally to digital filters, and more specifically, to digital decimation filters used in high-frequency applications.

2. Background of the Invention

Digital filters have replaced traditional analog filters in many applications. Predictability/repeatability and high-order slope implementations have made digital filters preferable to analog filters for both low-frequency and high-frequency applications. In particular, high-frequency digital filters are increasingly used in the intermediate frequency (IF) stages of radio communications equipment, wireless networking equipment and other radio-frequency (RF) applications. Various topologies have been used and proposed for use within IF stages of receivers, and decimating filters are particularly applicable to IF receivers as the required clocking rate of each successive stage may be reduced, resulting in a more economical solution.

In particular, a topology known as a Hogenauer Filter (as described by Eugene B. Hogenauer in "An Economical Class of Digital Filters for Decimation and Interpolation" published in the Institute of Electrical and Electronics Engineers (IEEE) Transactions on Acoustics Speech and Signal Processing (ASSP) April 1981, is desirable for use in receiver digital IF stages. The Hogenauer filter provides advantages in via a simple structure that lends itself to high-speed implementation, the decimation ratio is inherently scaled to the filter bandwidth and that the resources required are independent of the decimation ratio.

However, Hogenauer filters have several disadvantages. First, the DC gain of such a filter is k^N where k is the decimation factor and N is the number of filter stages. So, as the decimation or length of the filter is increased, the DC gain must be compensated by lengthening the integrator. Second, the frequency domain transfer function approximates a sinc function: $(\sin \pi f/\pi f)^N$, which is not a particularly steep cut-off response for a given order of filter. Therefore, many filter stages are typically used in cascade to attain a particular level of stopband attenuation and rejection slope. Further, in the Hogenauer filter, the zeros of the filter are located at integer multiples of the decimated output rate (frequency). Therefore, once the filter order is determined, the rejection slope and ultimate stopband attenuation is set.

Therefore, it would be desirable to provide an improved digital decimation filter having improved rejection characteristics without greatly increasing the complexity of the filter. It would further be desirable to provide a digital decimation filter having positionable zeros, whereby the steepness of the cut-off response may be optimized for particular applications. It would further be desirable to provide an improved digital decimation filter having a selectable decimation rate.

SUMMARY OF THE INVENTION

The above objective of providing an improved digital decimation filter is achieved in an IF processing block including a digital filter circuit and method. The digital filter circuit includes a plurality of integrators followed by a plurality of decimating FIR filter stages. The digital filter circuit may include a final equalization FIR filter stage that

compensates for the sampling response, permitting the filter cut-off response to be optimized independent of the sampling response.

The apparatus may be embodied in a receiver having a digital IF filter, and may be implemented in an application-specific integrated circuit (ASIC), a field-programmable gate array (FPGA) or other suitable integrated circuit technology. The filter may also be implemented by program instructions performing steps in accordance with the method of the present invention for execution within a digital signal processor (DSP) or within a general-purpose microprocessor.

The foregoing and other objectives, features, and advantages of the invention will be apparent from the following, more particular, description of the preferred embodiment of the invention, as illustrated in the accompanying drawings.

BRIEF DESCRIPTION OF THE DRAWINGS

FIG. **1** is a block diagram depicting a digital IF processing block in accordance with an embodiment of the present invention.

FIG. **2**A is a block diagram depicting a prior art Hogenauer digital filter.

FIG. **2**B is a block diagram depicting a digital decimating filter in accordance with an embodiment of the present invention.

FIG. **3**A is a block diagram depicting a prior art FIR filter section.

FIG. **3**B is a block diagram depicting a transformed FIR filter module as incorporated within the digital decimating filter of FIG. **2**B.

FIG. **4** is a graph depicting frequency response characteristics within a digital filter in accordance with an embodiment of the present invention.

DETAILED DESCRIPTION OF THE EMBODIMENTS

Referring now to the figures and in particular to FIG. **1**, a digital IF processing block **10** of a RF receiver in accordance with an embodiment of the present invention is depicted in a block diagram. An analog-to-digital converter **11** (ADC) receives an output of an RF downconverter and quadrature I and Q components are separated by mixers **18** by mixing the sampled downconverter output with the output of a carrier source **16** which is generated by a closed loop comprising detection circuit **14** and IF carrier generator/summer **15**. The outputs of mixers **18** are filtered and decimated by a novel digital decimation filter **12** in accordance with an embodiment of the present invention. Digital decimation filter **12** can be implemented in a digital application specific integrated circuit (ASIC), field programmable gate array (FPGA) or may include a processor and memory forming a digital signal processing block. It should be noted that various advantages of the present invention will enable digital signal processing without requiring a special-purpose digital signal processor (DSP), as requirements for a fast multiply instruction are eliminated for some embodiments. It should also be noted that the present invention provides new digital filter topologies and while a processor implementation may not be suitable in many IF receiver applications due to the processing rates required, the filter as implemented by a processor system executing program instructions in accordance with an embodiment of

the present invention may be advantageous in other systems and circuit applications where a digital decimation filter is desirable.

Digital decimation filter **12** provides demodulated signal information selected from an IF passband within the output of ADC **11** and is capable of processing information from not only the first Nyquist band, but with proper external filtering may also process higher order Nyquist bands from the output of ADC **11**. The IF passband outputs of digital decimation filter **12** is provided to an I and Q matched filter pair/symbol detector block **13** that generates the data (symbol decode) output of IF receiver block **10**. A processor interface **17** provides an external control port, whereby programming (digital state selection) of various of the internal blocks of IF receiver block **10**, such as IF carrier frequency, phase adjustment, etc. Of particular interest with respect to the present invention is that processor interface **17** permits programming of the output rate of digital decimation filter **12**, which determines the maximum symbol rate entering matched filter pair/symbol detector block **13**. The gain of digital decimation filter **12** is concurrently programmed by processor interface **17**, as for maximal system dynamic range, the gain of the filter must be made inversely proportional to the square root of the filter bandwidth. The above-mentioned proportionality scales the energy of the filtered signal to remain constant as bandwidth is adjusted, providing a properly scaled signal to matched filter pair/symbol detector block **13**. Processor interface **17** may also be used to program tap characteristics of digital decimation filter **12**, although for most IF receiver applications, a fixed tap characteristic will be used.

Referring now to FIG. **2**A, a prior art Hogenauer digital decimation filter is depicted in a block diagram. Integrators **22** are cascaded to provide an integrator of order N. N integrators **22** are included before decimation block **24** to integrate the digital input. Since all of integrators **22** are inserted in the signal path prior to any decimation processing, the dynamic range of the integrators may be optimized for a particular application and input signal. After decimation block **24**, N differentiators **26** are cascaded to provide the decimated final output signal. There are no feed-forward taps as in an FIR filter or feedback taps as in an infinite impulse response (IIR) filter, only the feedforward or feedback associated with each individual differentiator or integrator block. It is well known that a digital integrator as depicted may be expressed as a Z-transform implementation comprising a single delay element Z^{-1} having a unity coefficient feedback signal summed with a unity coefficient input signal. It is also well known that a digital differentiator as depicted may be expressed as a Z-transform implementation comprising a single delay element Z^{-1} having a unity coefficient output signal subtracted from a unity coefficient feed-forward of the input signal. The decimation factor of the depicted filter is k, and decimation block **24** sub-samples the output of integrators by the decimation factor to accomplish the bandwidth reduction.

The filter depicted in FIG. **2**A is a filter for general use for providing digital decimation in IF receiver stages, but due to the shape of the filter transfer function (sinc function), a reasonably high order filter must typically be used (compared to that of analog filters), requiring a large number of integrator **22** and differentiator **26** stages. The large number of stages increases the integrator bit width and complexity. Since the zeros of the transfer function occur at 2/k multiples of the decimated output frequency, the relationship between the zeros is predetermined and yields the characteristic transfer function of the Hogenauer filter, which approaches a sinc function as k increases.

A primary advantage of the Hogenauer filter is that the passband shape is almost independent of decimation ratio, i.e., when the decimation ratio is changed, it is only necessary to change the scaling factor of decimation block **24** to shift the transfer function to the new decimation rate. Another desirable property of the Hogenauer filter is that overflow in the integrator stages due to DC offset does not generate distortion in the filter output. The present invention provides a new topology for a digital filter that provides control of the transfer function, while preserving the desirable characteristics of the Hogenauer filter.

Referring now to FIG. **2**B, a digital decimating filter in accordance with an embodiment of the present invention is shown. Integrators **22**A are present and arranged as in the Hogenauer filter topology, but the differentiator stages of the Hogenauer filter are replaced with transformed FIR filter sections **28**A–**28**B, providing tunability of the transfer function zeros. Between each FIR filter section **28**A–**28**B (which may include any number of filter sections), a decimation block **24**C that sub-samples by two is inserted. An intermediate decimation block **24**B scales the output rate by $k/2^{(N-1)}$ where k is the overall desired decimation ratio and N is the number of integrators and FIR sections.

The decimation portion of the filter (**28**A–B) is followed by a simple FIR filter **28**C which is only required to equalize out the droop in the decimated pass band, not provide any attenuation. This reduces the speed requirement, as the FIR equalizer must only run at the decimated output rate and not faster. The FIR taps of FIR filter **28**C are chosen so as to complement the attenuation of the other FIR stages **28**A–B, so that the entire cascade structure provides all of the attenuation necessary to accomplish the stopband portion of the overall decimation filter.

Referring now to FIG. **3**A, detail of a prior art FIR filter section is depicted as is generally implemented in digital filter topologies. Coefficient multipliers **34** provide feed-forward taps permitting placement of zeros of the transfer function that can provide control of rejection slope and passband ripple or droop. Summing nodes **36** sum the feedforward signals multiplied by coefficient multipliers **34** with the in-line filter signal propagating through delay stages **32**. However, FIR filter section **30**A is not suitable for use within the digital decimating filter of FIG. **2**B. Because the FIR filter sections within the digital decimating filter of FIG. **2**B must replace the differentiators of the Hogenauer topology, the filter of FIG. **3**A must be transformed.

Referring now to FIG. **3**B, a transformed FIR filter section is shown, which is preferred for implementing FIR filter sections **28**A–C within digital decimation filter of FIG. **2**B. Given a desired transfer function in the Z domain, a Z transform and a set of coefficients can describe a transfer function as follows (the first 3 taps are expressly shown):

$$H_{Desired}(Z)=(C_0+C_1\times Z^{-1}+C_2\times Z^{-2}+C_3\times Z^{-3}\ldots)$$

The Z transform of a digital integrator in a Hogenauer filter is shown below:

$$H_{integrator}(Z)=\frac{1}{(1-Z^{-1})}$$

With a digital integrator preceding the FIR filter section, the filter needs to be transformed as follows:

$$H_{transform}(Z)=(1-Z^{-1})\times(C_0+C_1\times Z^{-1}+C_2\times Z^{-2}+C_3+Z^{-3}\ldots)$$

Which expands to the following result:

$$H_{transform}(Z)=C_0+(C_1-C_0)\times Z^{-1}+(C_2-C_1)\times Z^{-2}+(C_3-C_2)\times Z^{-3}+(C_4-C_3)\times Z^{-4}\ldots$$

Therefore, in order to replace a differentiator stage with a FIR filter section, the prototype filter length is increased by 1 stage and the coefficients must be transformed to be the difference between the coefficient values of the original FIR filter. The above transform can be used to design decimator filters from a conventional prototype FIR filter.

The differentiators of the Hogenauer filter topology are each replaced with a FIR filter section, which is generally implemented as depicted as FIR filter section **30**B. Coefficient multiplier/subtractors **34**A are implemented with integer coefficients to preserve the desirable integrator overflow properties of a Hogenauer topology, and provide feedforward taps permitting placement of zeros of the transfer function that can provide control of rejection slope and passband ripple or droop. Summing nodes **36** sum the feedforward signals multiplied by coefficient multiplier/subtractors **34**A with the in-line filter signal propagating through delay stages **32**. Coefficient multiplier/subtractors **34**A may be implemented using shifters and/or adders, as all coefficients are integer, eliminating any need for a fast multiplier. Delay stages **32** are generally operated at clock frequencies decreasing by factors of two for each transformed filter stage, as the progressive decimation through the filter permits reduction of the clock frequency. Depending on the topology, a single high frequency clock may be used (or a multiphase clock to permit compensation for on-chip delay and elimination of race conditions) and delay stages **32** enabled/disabled for clocked operation based on an enable signal progressively divided by two. It is advantageous in some applications to clock the first two stages of the first FIR filter section using the highest speed clock, in which case the filter taps must be transformed to take into account the frequency response change.

It is possible to design filters using the topology of FIG. **3**B with arbitrary coefficient values, but a practical filter needs an additional restriction. A useful feature of the prior art structure is that with proper scaling the transfer characteristic of the decimation filter is independent of overflow in the integrator stages. The presence of a significant DC component at the input of the filter will eventually cause integrator overflow, and if the output is to be filtered without distortion, the result must be independent of the issue. This desirable property of independence is preserved in the invention herein described by requiring the transformed FIR taps to have integer values.

An illustration of a filter design showing the relationship between the desired FIR filter design and the coefficients as transformed for use in the digital decimation filter of the present invention is illustrated in Table 1:

TABLE 1

Filter	# of Taps	FIR TAP Values	Transformed Tap Values
1	3	2, 3, 2	2, 1, −1, −2
2	5	2, 5, 7, 5, 2	2, 3, 2, −2, −3, −2
3	1	1	1, −1

Note that Filter section 3 is a standard Hogenauer differentiator stage. A filter with the coefficients of Table 1 was built as part of sampled IF receiver and set for post processing at 8 bit word width, requiring roughly 50 dB of attenuation in the decimation filter. The filter was built to requirements using 3 stages (N=3) of the modified Hogenauer filter for the decimation section. The decimation section was built using only coefficient values of 1, 2 and 3 which minimizes the number of adders required to generate the coefficients. The frequency response **42** of the above-described filter is shown in FIG. **4**.

The decimation section was followed by a conventional **11** Tap FIR filter to equalize (remove) the passband droop. The filter is odd order and symmetrical with 6 unique coefficient values. The coefficients of the equalizer filter are:

Coefficient Number	Coefficient Value
Coefficient 0 and 10	−1/128 −1/512
Coefficient 1 and 9	1/16 −1/64
Coefficient 2 and 8	−1/8 −1/64 −1/256
Coefficient 3 and 7	−1/2 −1/8
Coefficient 4 and 6	−1 −1/8 −1/64
Coefficient 5	2 + (if k = 4 then 1/32 else 0)

The overall filter has passband flatness within +−0.1 dB from 0 to 0.35 of the decimated rate, and a stopband of −47 dB at the worst case (typically >−50 dB) from 0.65 to 1 times the decimated rate, forming an effective decimator. These specifications are met at decimation ratios of 2^J where J ranges from 2 to 13, or overall decimation in powers of 2 from 4 to 8192. The frequency response **44** of the overall digital decimating filter is shown in FIG. **4**. The response **46** of the equalizer FIR filter is also shown in FIG. **4**.

While the invention has been particularly shown and described with reference to the preferred embodiments thereof, it will be understood by those skilled in the art that the foregoing and other changes in form, and details may be made therein without departing from the spirit and scope of the invention.

What is claimed is:

1. A digital IF processing block for processing an intermediate frequency signal within a communications receiver, comprising:

a digital filter having an input coupled to said intermediate frequency signal, said digital filter comprising

a plurality of cascaded integrator stages coupled to an input of said digital filter circuit, and

a plurality of cascaded finite impulse response (FIR) filter stages, wherein a first one of said FIR filter stages has an input coupled to an output of a last one of said integrator stages; and

a data processor comprising

at least one matched filter coupled to said output of said last one of said FIR filter stages for correlating symbol energy encoded within said intermediate frequency signal, and

at least one detector coupled to an output of said at least one matched filter for providing a digital data output of said digital IF processing block.

2. The digital IF processing block of claim **1**, further comprising one or more programming registers for receiving external select information, and wherein said programming registers are coupled to said digital filter for selecting a bandwidth of said digital filter by adjusting a decimation rate of at least one of said plurality of FIR filter stages.

3. The digital IF processing block of claim 1, wherein a transfer function from said input of said digital filter to an output of a last one of said FIR filter stages has a finite DC gain and a frequency domain shaping characteristic, and wherein an output of said last FIR filter stage is decimated substantially with respect to said output of said last integrator.

4. The digital IF processing block of claim 1, wherein said digital filter further comprises a plurality of decimate-by-two blocks, each disposed between a pair of said plurality of FIR stages, whereby each of said plurality of FIR filter stages operates at a rate decimated by two with respect to a preceding one of said plurality of FIR filter stages, excepting a first one of said plurality of FIR filter stages.

5. The digital IF processing block of claim 1, wherein said FIR filter stages are transformed stages having tap coefficients determined by differences between pairs of sequential coefficients of the Z-transform of a predetermined FIR filter stage transfer function, whereby said FIR filter stages are transformed to operate on an integrated signal to produce said FIR filter stage transfer function.

6. The digital IF processing block of claim 5, wherein each of said FIR filter stages includes a number of delay elements coupled in sequence equal to the order of said FIR filter stage transfer function plus one.

7. The digital IF processing block of claim 1, further comprising a decimation block having a decimation factor equal to the overall desired decimation factor of said plurality of FIR filter stages divided by two raised to a power equal to a quantity of said plurality of FIR filter stages.

8. The digital IF processing block of claim 7, wherein said digital filter further comprises a plurality of decimate-by-two blocks, each disposed between a pair of said plurality FIR stages, whereby each of said plurality of FIR filter stages operates at a rate decimated by two with respect to a preceding one of said plurality of FIR filter stages, excepting a first one of said plurality of FIR filter stages.

9. The digital IF processing block of claim 8, wherein said FIR filter stages are transformed stages having tap coefficients determined by differences between pairs of sequential coefficients of the Z-transform of a predetermined FIR filter stage transfer function, whereby said FIR filter stages are transformed to operate on an integrated signal to produce said FIR filter stage transfer function, and wherein each of said FIR filter stages includes a number of delay elements coupled in sequence equal to the order of said FIR filter stage transfer function plus one.

10. The digital IF processing block of claim 9, further comprising an equalizer filter having a frequency response substantially equal to an inverse of a Nyquist passband droop of said plurality of FIR filter sections.

11. The digital IF processing block of claim 1, further comprising an equalizer filter having a frequency response substantially equal to an inverse of a Nyquist passband droop of said plurality of FIR filter sections.

12. The digital IF processing block of claim 1, further comprising a digital mixer having an output coupled to said input of said digital filter for providing said intermediate frequency signal.

13. A digital IF processing block for processing an intermediate frequency signal within a communications receiver, comprising:

a digital mixer having an output for providing an intermediate frequency signal;

a digital filter having an input coupled to said output of said digital mixer, said digital filter comprising

a plurality of cascaded integrator stages coupled to an input of said digital filter circuit, and

a plurality of cascaded finite impulse response (FIR) filter stages, wherein a first one of said FIR filter stages has an input coupled to an output of a last one of said integrator stages;

a data processor comprising

at least one matched filter coupled to said output of said last one of said FIR filter stages for correlating symbol energy encoded within said intermediate frequency signal, and

at least one detector coupled to an output of said at least one matched filter for providing a digital data output of said digital IF processing block; and

an equalizer filter having an input coupled to an output of said digital filter and having a frequency response substantially equal to an inverse of a Nyquist passband droop of said plurality of FIR filter sections.

* * * * *