US 20080039036A1

(19) United States

(12) Patent Application Publication

(10) Pub. No.: US 2008/0039036 A1

(43) Pub. Date: Feb. 14, 2008

Lee

(54) BROADCASTING RECEIVING APPARATUS AND CONTROL METHOD THEREOF

(75) Inventor: Hoo-Kwan Lee, Seoul (KR)

Correspondence Address:
ROYLANCE, ABRAMS, BERDO & GOODMAN, L.L.P.
1300 19TH STREET, N.W., SUITE 600
WASHINGTON,, DC 20036

(73) Assignee: Samsung Electronics Co., Ltd.

(21) Appl. No.: 11/783,189

(22) Filed: Apr. 6, 2007

(30) Foreign Application Priority Data

Aug. 8, 2006 (KR) 2006-74886

Publication Classification

(51) Int. Cl.
H04B 1/18 (2006.01)

(52) U.S. Cl. 455/185.1

(57) ABSTRACT

A broadcasting receiving apparatus includes a first receiving unit and a second receiving unit that receive a broadcasting signal including channel information, a storing unit, and a controller that verifies whether there exists a broadcasting signal which is receivable through the first receiving unit according to a user's instruction, stores channel information corresponding to the verified broadcasting signal in the storing unit, verifies whether there exists a broadcasting signal of a predetermined format based on the channel information stored in the storing unit, and controls the second receiving unit to receive the verified broadcasting signal of the predetermined format.

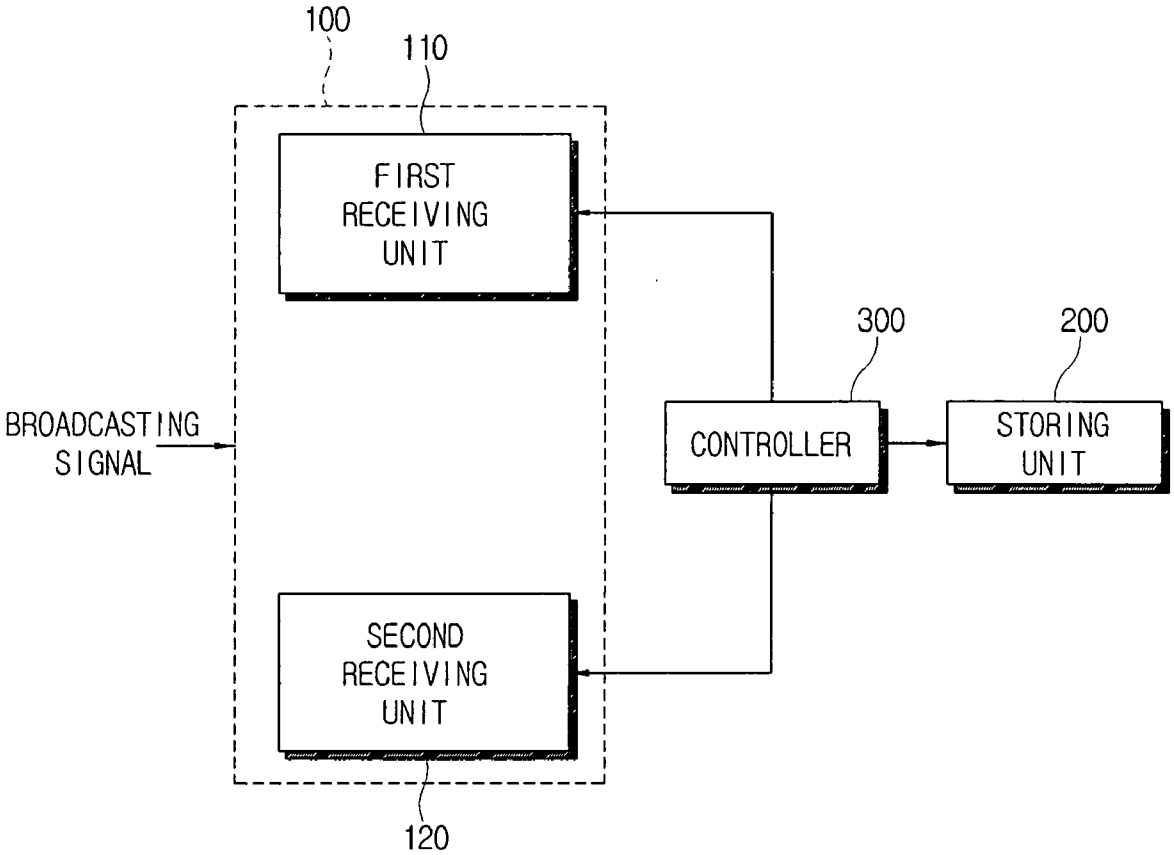

Comcast, Ex. 1153

FIG. 1

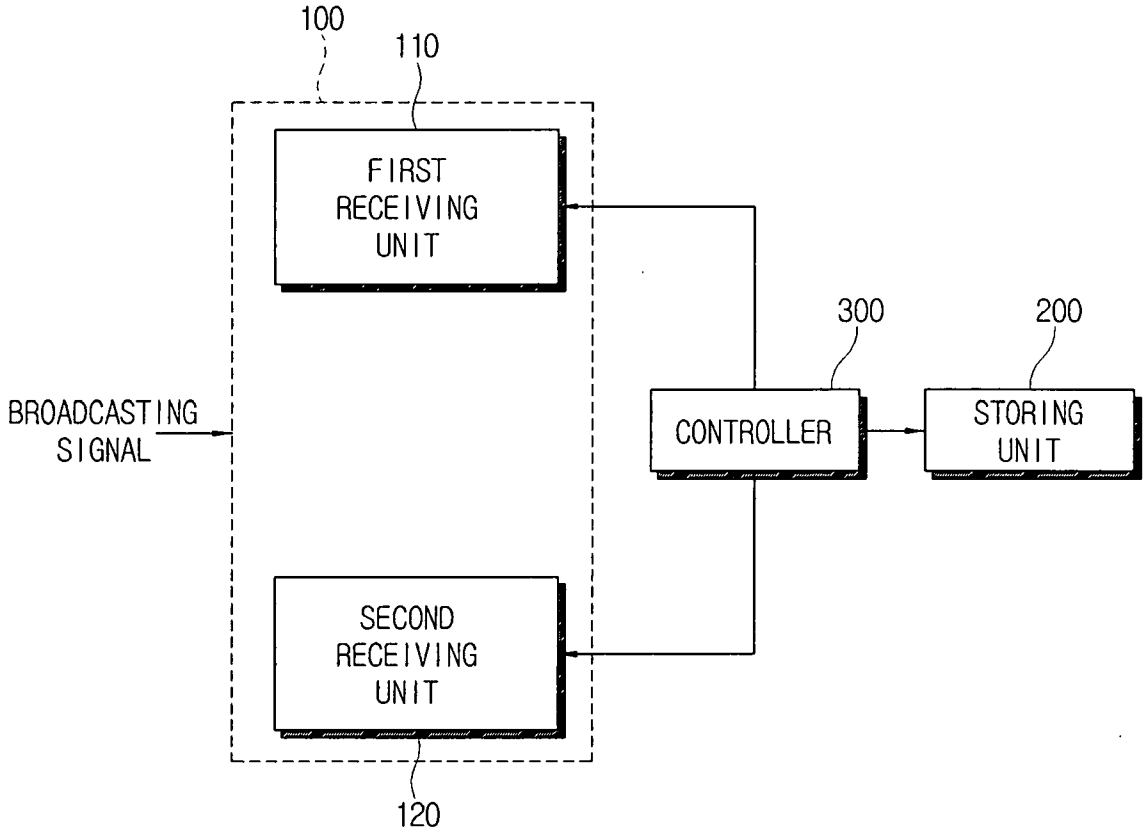
100
110
FIRST RECEIVING UNIT
BROADCASTING SIGNAL
300
200
CONTROLLER
STORING UNIT
SECOND RECEIVING UNIT
120

FIG. 2

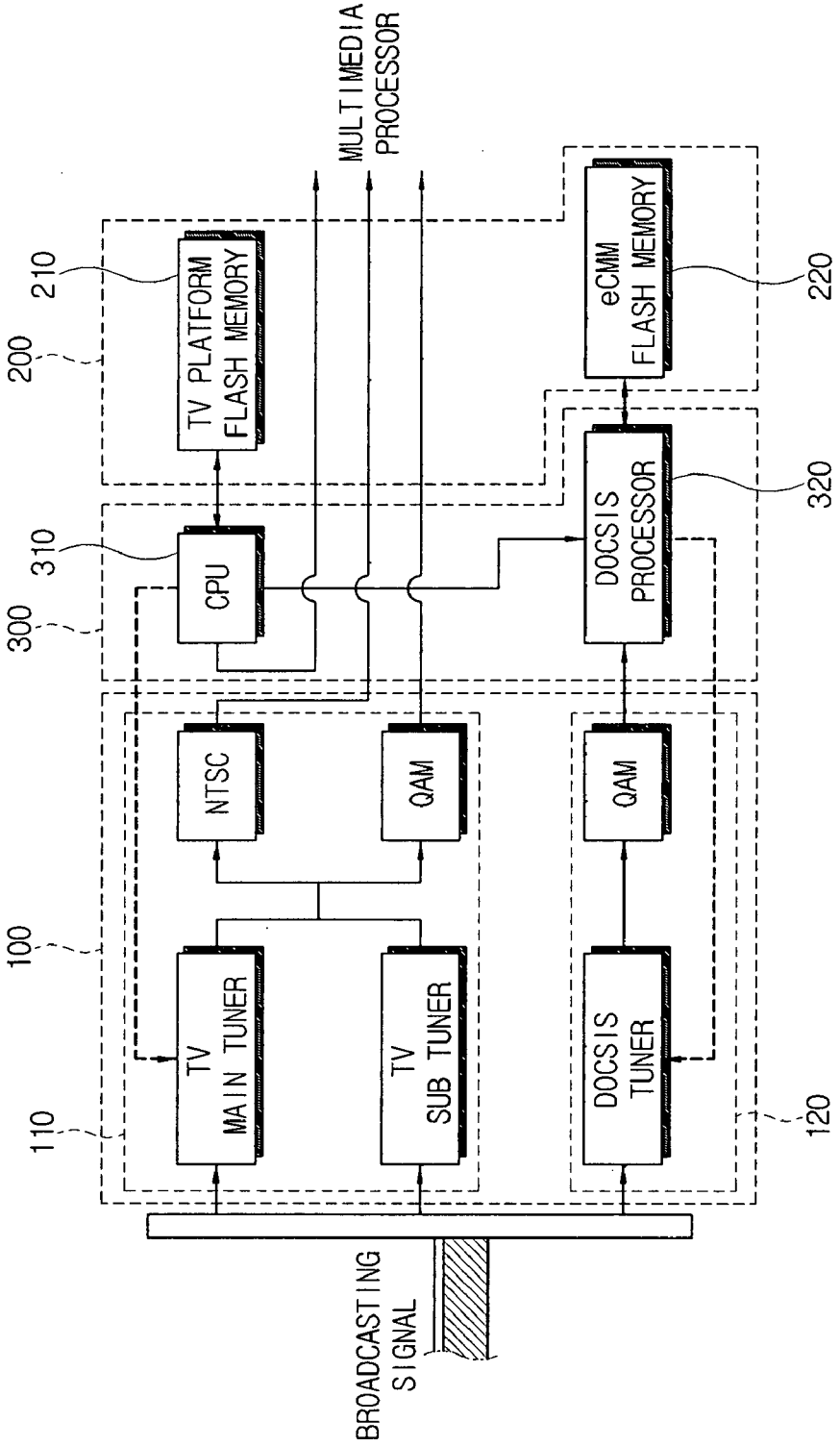
MULTIMEDIA PROCESSOR
TV PLATFORM FLASH MEMORY
eCMM FLASH MEMORY
CPU
DOCSIS PROCESSOR
NTSC
QAM
QAM
TV MAIN TUNER
TV SUB TUNER
DOCSIS TUNER
BROADCASTING SIGNAL
210
200
220
310
300
320
100
110
120

FIG. 3

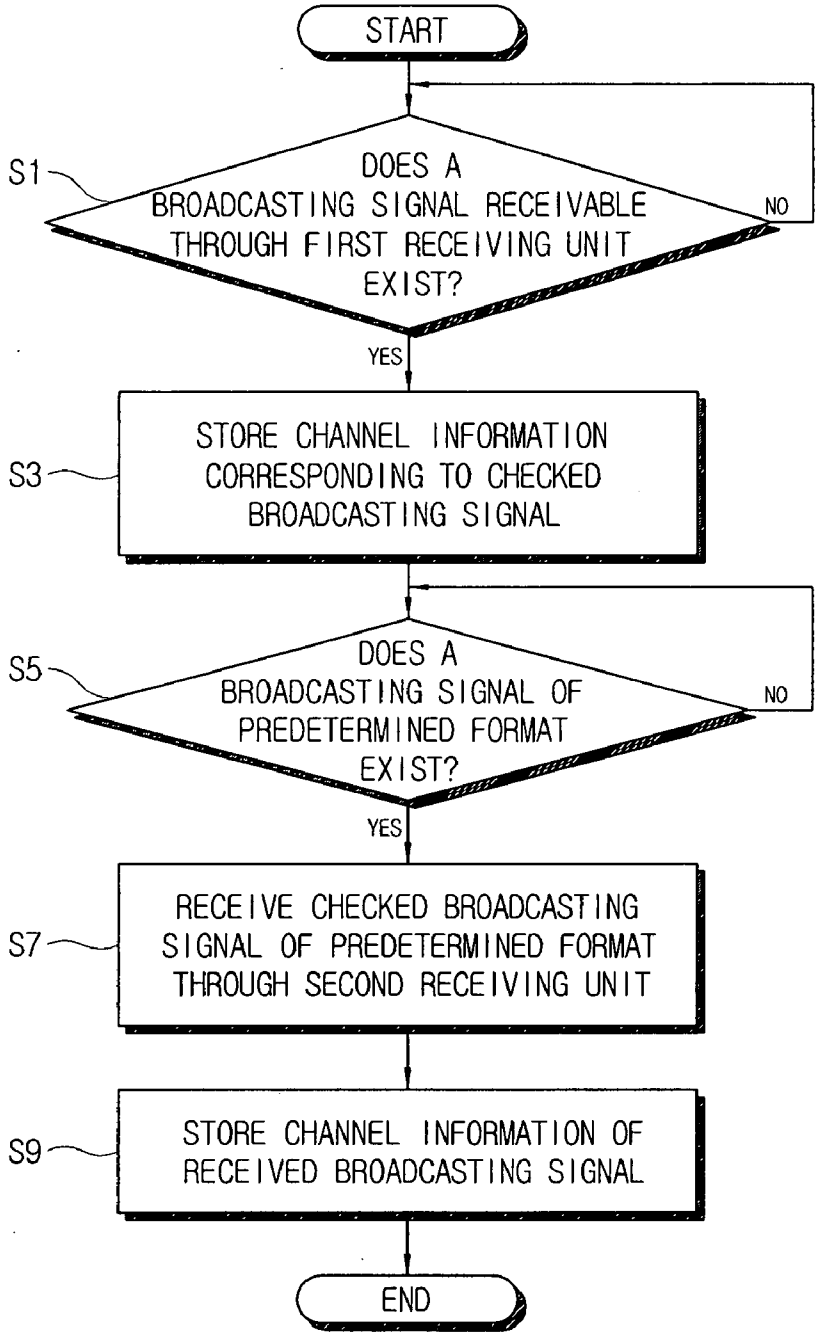
START
S1
DOES A BROADCASTING SIGNAL RECEIVABLE THROUGH FIRST RECEIVING UNIT EXIST?
NO
YES
S3
STORE CHANNEL INFORMATION CORRESPONDING TO CHECKED BROADCASTING SIGNAL
S5
DOES A BROADCASTING SIGNAL OF PREDETERMINED FORMAT EXIST?
NO
YES
S7
RECEIVE CHECKED BROADCASTING SIGNAL OF PREDETERMINED FORMAT THROUGH SECOND RECEIVING UNIT
S9
STORE CHANNEL INFORMATION OF RECEIVED BROADCASTING SIGNAL
END

BROADCASTING RECEIVING APPARATUS AND CONTROL METHOD THEREOF

CROSS-REFERENCE TO RELATED APPLICATIONS

[0001] This application claims the benefit under 35 U.S.C. §119(a) of Korean Patent Application No. 2006-0074886, filed on Aug. 8, 2006, the entire disclosure of which is hereby incorporated by reference.

BACKGROUND OF THE INVENTION

[0002] 1. Field of the Invention

[0003] The present invention relates to an apparatus and method for receiving a broadcasting signal. More particularly, the present invention relates to receiving a broadcasting signal to realize interactive broadcasting.

[0004] 2. Description of the Related Art

[0005] In recent years, broadcasting providers have provided users with traditional one-way broadcasting services and two-way broadcasting services allowing interaction with users.

[0006] Korean digital cable broadcasting providers have the application platform, which is called 'Open Cable,' and is similar to that of American digital cable broadcasting providers. A broadcasting receiving apparatus such as a set-top box that supports an open cable application platform (OCAP) must include a means for allowing communication with a user through a cable network as well as a means for receiving broadcasting signals. Cable communication means specified by the OCAP employs an Out of Band (OOB) system using out-of-band channels or a DOCSIS Set-top box Gateway (DSG) system using a modem of a DOCSIS standard. Alternatively, the cable communication means may employ both of them for compatibility.

[0007] Conventional broadcasting receiving apparatuses have a main tuner for receiving general broadcasting signals and a Data Over Cable Service Interface Specification (DOCSIS) tuner for receiving OCAP data broadcasting signals. The main tuner detects a TV signal from a cable TV band of 54 MHz to 858 MHz in the general broadcasting signals and scans channels. The DOCSIS tuner detects a DOCSIS channel signal from a DOCSIS downstream signal band of 90 MHz to 858 MHz and scans channels.

[0008] Since two tuners repeatedly scan broadcasting signals with a similar frequency band, the conventional broadcasting receiving apparatuses are inefficient in searching of channels.

[0009] In addition, the conventional broadcasting receiving apparatuses have another problem in that initial access to a cable modem is delayed since the DOCSIS downstream signal must be found separately from the TV signal.

[0010] Accordingly, there is a need for an improved system and method for providing a broadcasting receiving apparatus which is capable of increasing efficiency of channel scanning and reducing the time to access a cable modem system.

SUMMARY OF THE INVENTION

[0011] An aspect of exemplary embodiments of the present invention is to address at least the above problems and/or disadvantages and to provide at least the advantages described below. Accordingly, an aspect of exemplary embodiments of the present invention is to provide a broadcasting receiving apparatus which is capable of increasing efficiency of channel scanning and reducing the time it takes to access a cable modem system by storing only information on channels having the same frequency band as a data broadcasting signal of a DOCSIS standard among broadcasting signals received through a main tuner and scanning data broadcasting channels based on the stored channel information when an instruction to search the data broadcasting channels is input to the broadcasting receiving apparatus, and a control method thereof.

[0012] The foregoing and/or other aspects of the present invention can be achieved by providing a broadcasting receiving apparatus comprising a first receiving unit and a second receiving unit that receive a broadcasting signal including channel information, a storing unit and a controller. The controller verifies whether there exists a broadcasting signal which is receivable through the first receiving unit according to a user's instruction, stores channel information corresponding to the verified broadcasting signal in the storing unit, verifies whether there exists a broadcasting signal of a predetermined format based on the channel information stored in the storing unit, and controls the second receiving unit to receive the verified broadcasting signal of the predetermined format.

[0013] According to exemplary embodiments of the present invention, the controller stores channel information of the broadcasting signal of the predetermined format received through the second receiving unit in the storing unit.

[0014] According to exemplary embodiments of the present invention, the controller stores the channel information of the broadcasting signal received through the second receiving unit in the storing unit, based on the channel information of the broadcasting signal received through the first receiving unit and the channel information stored in the storing unit.

[0015] According to exemplary embodiments of the present invention, the controller controls the second receiving unit to receive a broadcasting signal of a Data Over Cable Service Interface Specification (DOCSIS) standard according to the user's instruction.

[0016] According to exemplary embodiments of the present invention, the second receiving unit comprises a DOCSIS tuner to receive the broadcasting signal of the DOCSIS standard.

[0017] The foregoing and/or other aspects of the present invention can be achieved by providing a control method of a broadcasting receiving apparatus. The existence of a broadcasting signal which is receivable through a first receiving unit according to a user's instruction is verified. Channel information of the verified broadcasting signal is stored. A verification is made to confirm whether there exists a broadcasting signal of a predetermined format based on the stored channel information according to the user's instruction and receiving the verified broadcasting signal of the predetermined format through a second receiving unit.

[0018] According to exemplary embodiments of the present invention, the control method further comprises storing channel information corresponding to the broadcasting signal, received through the second receiving unit.

[0019] According to exemplary embodiments of the present invention, the control method further comprises storing the channel information corresponding to a broadcasting signal received through the first receiving unit; and

based on the stored channel information, storing the channel information corresponding to the broadcasting signal received through the second receiving unit.

[0020] According to exemplary embodiments of the present invention, the control method further comprises receiving a broadcasting signal of a Data Over Cable Service Interface Specification (DOCSIS) standard through the second receiving unit.

[0021] According to exemplary embodiments of the present invention, receiving the broadcasting signal through the first receiving unit and the second receiving unit each comprises tuning a channel corresponding to a receivable broadcasting signal and demodulating the broadcasting signal comprising the tuned channel.

BRIEF DESCRIPTION OF THE DRAWINGS

[0022] The above and other exemplary objects, features and advantages of certain exemplary embodiments of the present invention will be more apparent from the following description taken in conjunction with the accompanying drawings, in which:

[0023] FIG. **1** is a control block diagram of a broadcasting receiving apparatus according to an exemplary embodiment of the present invention;

[0024] FIG. **2** is a view illustrating a configuration of a set-top box according to an exemplary embodiment of the present invention; and

[0025] FIG. **3** is a control flow chart illustrating an operation of the broadcasting receiving apparatus according to the exemplary embodiment of the present invention.

[0026] Throughout the drawings, the same drawing reference numerals will be understood to refer to the same elements, features and structures.

DETAILED DESCRIPTION OF EXEMPLARY EMBODIMENTS

[0027] The matters defined in the description such as a detailed construction and elements are provided to assist in a comprehensive understanding of the embodiments of the invention. Accordingly, those of ordinary skill in the art will recognize that various changes and modifications of the embodiments described herein can be made without departing from the scope and spirit of the invention. Also, descriptions of well-known functions and constructions are omitted for clarity and conciseness.

[0028] As illustrated in FIG. **1**, a broadcasting receiving apparatus according to an exemplary embodiment of the present invention comprises a receiving unit **100**, a storing unit **200** and a controller **300**.

[0029] The receiving unit **100** locks a channel comprising a particular frequency according to a control of the controller **300** and receives a broadcasting signal corresponding to the locked channel. The receiving unit **100** may be embodied to comprise tuners and demodulators. According to an exemplary implementation, the receiving unit **100** locks a channel selected by a user and receives a broadcasting signal corresponding to the locked channel.

[0030] In this exemplary embodiment of the present invention, the receiving unit **100** may comprise a first receiving unit **110** that receives general cable broadcasting signals and a second receiving unit **120** that receives signals based on the DOCSIS that processes data exchange between a cable TV broadcaster and the broadcasting receiving apparatus such as a TV set-top box.

[0031] In this exemplary embodiment, the first receiving part **110** may receive general analog broadcasting signals and digital broadcasting signals, and may be embodied by a plurality of tuners if the broadcasting receiving apparatus supports PIP (Picture In Picture).

[0032] Channel information of the broadcasting signal received through the receiving part **100** is stored in the storing part **200**. According to an exemplary implementation, the channel information may include a channel frequency and a channel number, and the storing unit **200** may be embodied by a flash memory. In addition, the storing unit **200** may be provided to store channel information on analog channels, digital channels, and DOCSIS channels, separately.

[0033] Upon receiving a channel search signal from a user, the controller **300** receives a channel useful in a currently receivable frequency band through the first receiving unit **110**, demodulates a received broadcasting signal into an analog signal of an NTSC (National Television System Committee) standard and a digital signal of a QAM (Quadrature Amplitude Modulation) standard, and then stores the channel information of the broadcasting signal in the storing part **200**.

[0034] According to an exemplary implementation, a signal to be received through the second receiving part **120** is included in a broadcasting signal of the QAM standard received through the first receiving part **110**. Accordingly, upon receiving a DOCSIS channel search instruction from the user, the controller **300** verifies whether or not a useful signal is received through the second receiving unit **120** based on the channel information stored in the storing unit **200**, receives the useful signal, and stores the received signal in the storing unit **200**.

[0035] The broadcasting receiving apparatus of the present invention may comprise, for example, an OCAP set-top box that receives cable broadcasting signals.

[0036] According to an American OCAP, a channel bandwidth in a cable TV (CATV) is presently 6 MHz, which is insufficient for simultaneous broadcasting of a number of programs and channel information. Accordingly, an open cable system separates the channel information, CA (Conditional Access) information, among others from broadcasting data and transmits the separated channel information, the CA information, among others through a channel other than broadcasting channels. For example, the open cable system transmits the channel information, the CA information, etc. through a cable network to which an OOB (Out of Band) system or a DOCSIS system is applied.

[0037] FIG. **2** illustrates an example of a terrestrial and cable complex broadcasting receiving apparatus according to an exemplary embodiment of the present invention, showing a case where the concept of the present invention is applied to an open cable set-top box incorporating a modem using DSG (DOCSIS set-top box gateway) system. A terrestrial wave received through the first receiving part **110** is processed in a terrestrial broadcasting demodulator such as an 8 VSB (Vestigial Side Band) demodulator via a terrestrial broadcasting tuner. The processed terrestrial wave is subjected to signal conversion in an A/V decoder (not shown) and a multimedia processing part, and then is transmitted as an output signal such as an image or sound to a multimedia processor for reproduction/output.

[0038] For the cable broadcasting, data transmitted via a cable are processed in a cable broadcasting demodulator such as a 64/356 QAM demodulator via a cable broadcasting tuner of the first receiving part **110** and then is input to the A/V decoder (not shown).

[0039] As illustrated in FIG. **2**, a tuner for cable communication is one of the blocks of a modem. The open cable set-top box requires the cable communication tuner for modem function irrespective of how the modem is configured. The terrestrial and cable complex set-top box may incorporate at least two tuners for terrestrial broadcasting and cable broadcasting receipt and cable communication. For a set-top box to support PIP, a tuner for terrestrial broadcasting and cable broadcasting receipt may comprise a main tuner and a sub tuner.

[0040] In this exemplary embodiment of the present invention, for the OCAP set-top box, if a broadcasting channel and a DOCSIS channel for two-way broadcasting are searched through a cable broadcasting signal, when a channel search instruction is input from a user, the first receiving part **110** scans frequencies of analog broadcasting signals and digital broadcasting signals to find a useful broadcasting signal under control of a central processing unit CPU **310**. In this case, the CPU **310** searches channel information of a channel corresponding to the useful broadcasting signal among the analog broadcasting signals of an NTSC standard and the digital broadcasting signals of a QAM standard through the first receiving part **110**, and stores the searched channel information in the storing part **200**. In this exemplary embodiment of the present invention, channel information on the analog broadcasting signals and channel information on the digital broadcasting signals having a bandwidth of 6 MHz are stored in a TV platform flash memory **210** and an embedded Cable Modem Module (eCMM) flash memory **220**.

[0041] When a DOCSIS channel search instruction is input from a user, a DOCSIS processor **320** of the controller **300** controls a DOCSIS tuner to receive a useful DOCSIS broadcasting signal. According to an exemplary implementation, the DOCSIS processor **320** searches the useful DOCSIS broadcasting signal based on the channel information of the digital broadcasting signals having the bandwidth of 6 MHz among the information stored in the eCMM flash memory **220**.

[0042] Here, the DOCSIS processor **320** may receive only a broadcasting signal transmitted from a cable modem termination system (CMTS) and determine whether or not the broadcasting signal is a useful DOCSIS broadcasting signal through a header of the broadcasting signal corresponding to the stored channel information.

[0043] In addition, the DOCSIS processor **320** updates the channel information corresponding to the useful DOCSIS broadcasting signal received through the DOCSIS tuner **120** and stores the updated channel information in the eCMM flash memory.

[0044] An operation of the broadcasting receiving apparatus according to the exemplary embodiment of the present invention will be described in detail with reference to FIG. **3**.

[0045] First, upon receiving a channel search instruction from a user in order to receive a useful broadcasting signal, the controller **300** verifies whether there exists a broadcasting signal which can be received in the first receiving part **110** at step S**1**. In this exemplary embodiment of the present invention, for a set-top box to receive a broadcasting signal of an OCAP standard, the controller **300** verifies whether or not there exists a useful broadcasting signal in a band of 54 to 858 MHz.

[0046] If the existence of the useful broadcasting signal is verified, the controller **300** stores channel information corresponding to the useful broadcasting signal in the storing unit **200** at step S**3**. According to an exemplary implementation, the controller **300** stores channel information on analog broadcasting signals and 64/256 QAM digital broadcasting signals in the storing unit **200**.

[0047] Next, upon receiving a channel search instruction from a user in order to receive a broadcasting signal of a DOCSIS standard, the controller **300** verifies whether the broadcasting signal having a bandwidth of 6 MHz among the 64/256 QAM digital broadcasting signals stored in the storing unit **200** is a useful broadcasting signal by confirming a header of the broadcasting signal at step S**5**. Then, the controller **300** controls the second receiving unit **120** to receive the verified useful broadcasting signal at step S**7**, and then stores channel information on the useful broadcasting signal in the storing unit **200** at step S**9**.

[0048] According to an exemplary embodiment of the present invention, the broadcasting receiving apparatus of the present invention has been illustrated with the OCAP set-top box of the cable data broadcasting standard, but may be applied to set-top boxes or digital TVs to receive ACAP (Advanced Common Application Platform) or sky wave data broadcasting signals if broadcasting signals of a particular bandwidth are received.

[0049] Although the main tuner is separated from the DOCSIS tuner in the broadcasting receiving apparatus of the present invention, one tuner may be realized to perform both functions of the main tuner and the DOCSIS tuner.

[0050] As apparent from the above description, the present invention provides a broadcasting receiving apparatus which is capable of increasing efficiency of channel scanning by storing only information on channels having the same frequency band as a data broadcasting signal of a DOCSIS standard among broadcasting signals received through a main tuner and scanning data broadcasting channels based on the stored channel information when an instruction to search the data broadcasting channels is input to the broadcasting receiving apparatus, and a control method thereof.

[0051] The present invention also provides a broadcasting receiving apparatus which is capable of reducing time taken for a data broadcasting channel tuner to access a cable modem system by separating a general tuner scanning channels having the similar bandwidth to that of the data broadcasting from a tuner for exclusive use of data broadcasting.

[0052] While the present invention has been shown and described with reference to certain exemplary embodiments thereof, it will be appreciated by those skilled in the art that various changes in form and details may be made therein without departing from the spirit and scope of the invention as defined by the appended claims and their equivalents.

What is claimed is:

1. A broadcasting receiving apparatus comprising:

a first receiving unit and a second receiving unit that receive a broadcasting signal including channel information;

a storing unit; and

a controller that verifies whether there exists a broadcasting signal which is receivable through the first receiving unit according to a user's instruction, stores channel information corresponding to the verified broadcasting signal in the storing unit, verifies whether a broadcasting signal of a predetermined format exists based on the channel information stored in the storing unit, and controls the second receiving unit to receive the verified broadcasting signal of the predetermined format.

2. The broadcasting receiving apparatus according to claim **1**, wherein the controller stores channel information of the broadcasting signal of the predetermined format received through the second receiving unit in the storing unit.

3. The broadcasting receiving apparatus according to claim **1**, wherein the controller stores the channel information of the broadcasting signal received through the second receiving unit in the storing unit, based on the channel information of the broadcasting signal received through the first receiving unit and the channel information stored in the storing unit.

4. The broadcasting receiving apparatus according to claim **1**, wherein the controller controls the second receiving unit to receive a broadcasting signal of a Data Over Cable Service Interface Specification (DOCSIS) standard according to the user's instruction.

5. The broadcasting receiving apparatus according to claim **4**, wherein the second receiving unit comprises a DOCSIS tuner to receive the broadcasting signal of the DOCSIS standard.

6. A control method of a broadcasting receiving apparatus, comprising:

verifying whether there exists a broadcasting signal which is receivable through a first receiving unit according to a user's instruction;

storing channel information of the verified broadcasting signal; and

verifying whether there exists a broadcasting signal of a predetermined format based on the stored channel information according to the user's instruction and receiving the verified broadcasting signal of the predetermined format through a second receiving unit.

7. The control method according to claim **6**, further comprising storing channel information corresponding to the broadcasting signal, received through the second receiving unit.

8. The control method according to claim **6**, further comprising:

storing the channel information corresponding to a broadcasting signal received through the first receiving unit; and

based on the stored channel information, storing the channel information corresponding to the broadcasting signal received through the second receiving unit.

9. The control method according to claim **6**, further comprising receiving a broadcasting signal of a Data Over Cable Service Interface Specification (DOCSIS) standard through the second receiving unit.

10. The control method according to claim **9**, wherein the receiving the broadcasting signal through the first receiving unit and the second receiving unit each comprises:

tuning a channel corresponding to a receivable broadcasting signal; and

demodulating the broadcasting signal comprising the tuned channel.

* * * * *