US 20030220072A1

(19) United States

(12) Patent Application Publication (10) Pub. No.: US 2003/0220072 A1

Coffin, III (43) Pub. Date: Nov. 27, 2003

(54) SATELLITE RECEIVING SYSTEM WITH TRANSMODULATING OUTDOOR UNIT

(76) Inventor: **Louis F. Coffin III**, Mountain View, CA (US)

Correspondence Address:
LEE & HAYES PLLC
421 W RIVERSIDE AVENUE SUITE 500
SPOKANE, WA 99201

(21) Appl. No.: **10/154,615**

(22) Filed: **May 22, 2002**

Publication Classification

(51) **Int. Cl.**[7] **H04Q 7/20**

(52) **U.S. Cl.** **455/3.02**; 455/427

(57) **ABSTRACT**

A home satellite receiving system employs a transmodulating outdoor unit (ODU) that tunes to multiple signals, demodulates those signals into streams of data packets, and filters the streams of data packets to select data packets pertaining to viewer-specified programs. The ODU then constructs an integrated bitstream from the selected data packets and modulates that bitstream for transmission to an indoor IRD. This allows transfer of multiple programs from different satellite sources to the indoor IRD over a single coaxial cable. The indoor IRD reconstructs the packet stream timing for the viewer-specified programs from the integrated bitstream.

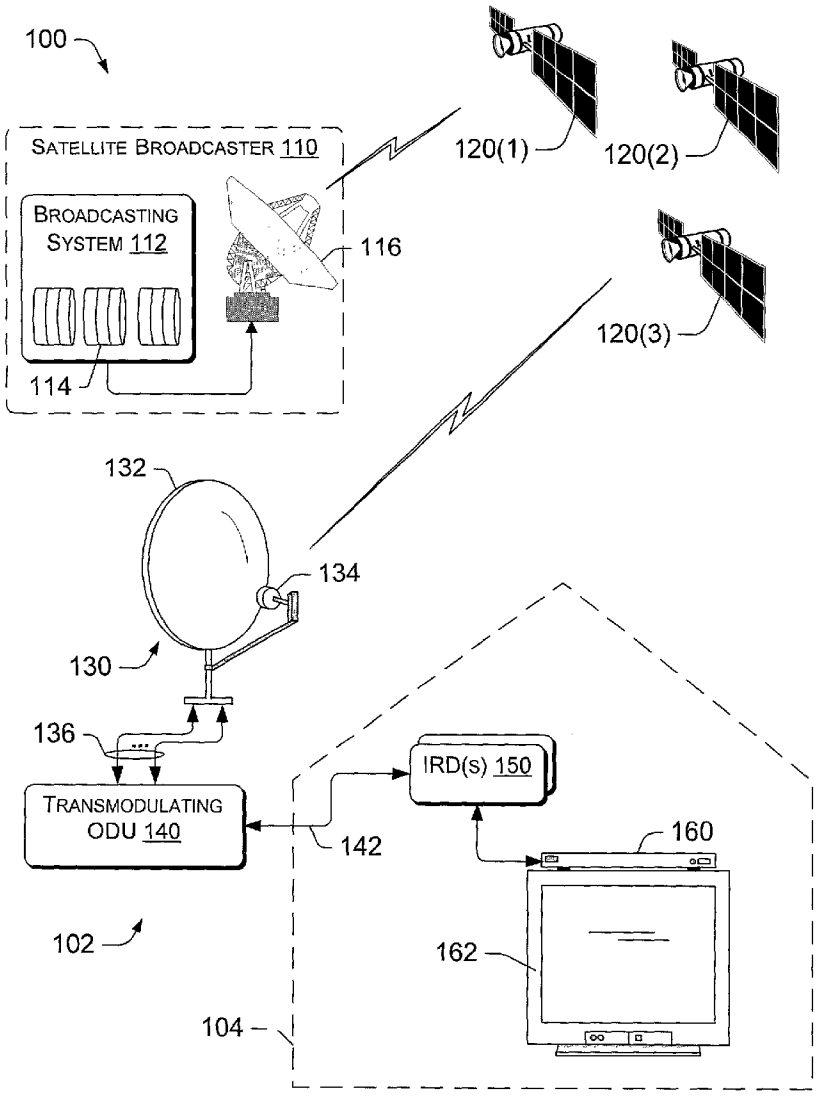

Comcast, Ex. 1154

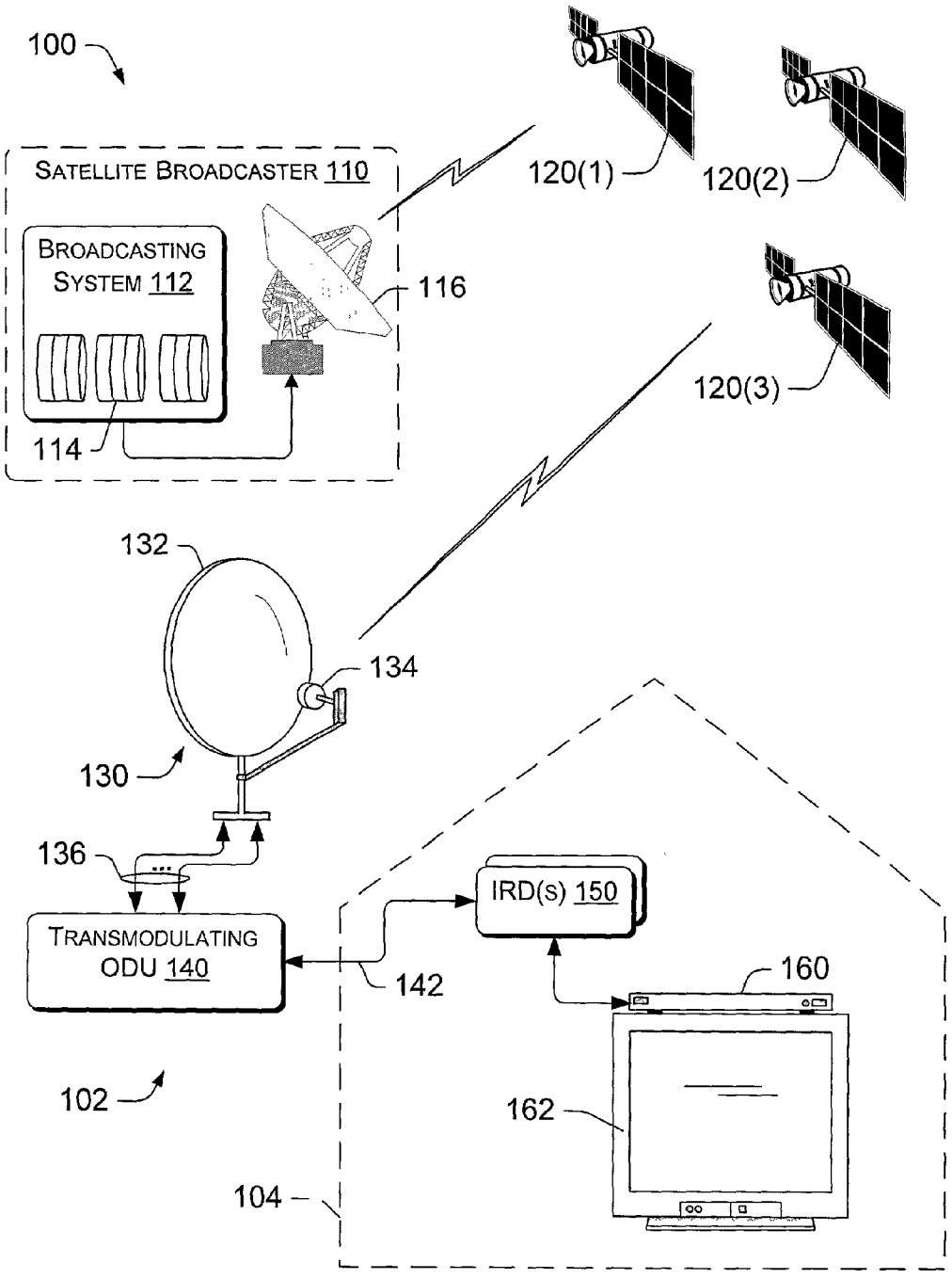
100
SATELLITE BROADCASTER 110
BROADCASTING SYSTEM 112
114
116
120(1)
120(2)
120(3)
132
134
130
136
TRANSMODULATING ODU 140
142
IRD(s) 150
160
162
102
104

Fig. 1

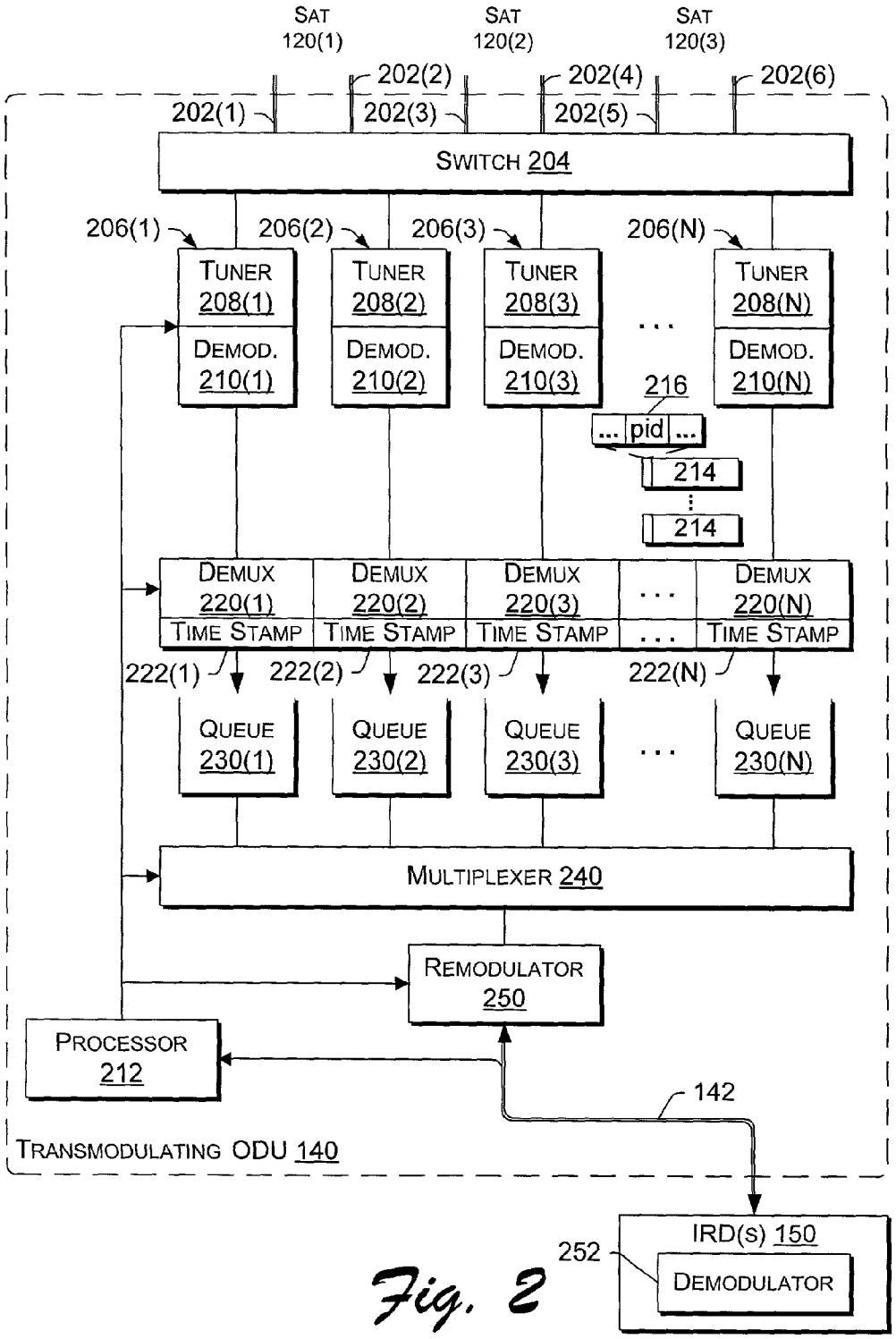
SAT 120(1)
SAT 120(2)
SAT 120(3)
202(1)
202(2)
202(3)
202(4)
202(5)
202(6)
SWITCH 204
206(1)
206(2)
206(3)
206(N)
TUNER 208(1)
TUNER 208(2)
TUNER 208(3)
TUNER 208(N)
DEMOD. 210(1)
DEMOD. 210(2)
DEMOD. 210(3)
DEMOD. 210(N)
216
... pid ...
214
214
DEMUX 220(1)
DEMUX 220(2)
DEMUX 220(3)
DEMUX 220(N)
TIME STAMP
TIME STAMP
TIME STAMP
TIME STAMP
222(1)
222(2)
222(3)
222(N)
QUEUE 230(1)
QUEUE 230(2)
QUEUE 230(3)
QUEUE 230(N)
MULTIPLEXER 240
REMODULATOR 250
PROCESSOR 212
142
TRANSMODULATING ODU 140
IRD(s) 150
252
DEMODULATOR

Fig. 2

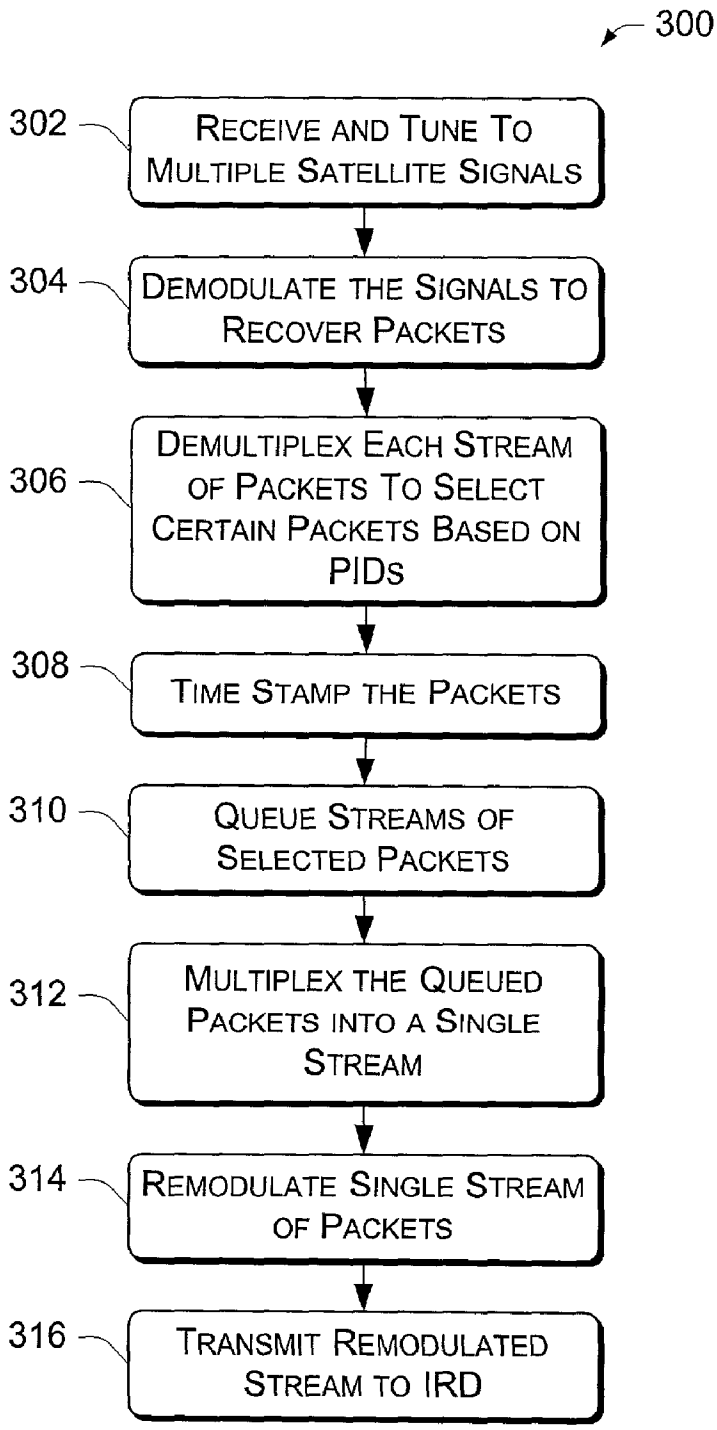
300
302
RECEIVE AND TUNE TO MULTIPLE SATELLITE SIGNALS
304
DEMODULATE THE SIGNALS TO RECOVER PACKETS
306
DEMULTIPLEX EACH STREAM OF PACKETS TO SELECT CERTAIN PACKETS BASED ON PIDS
308
TIME STAMP THE PACKETS
310
QUEUE STREAMS OF SELECTED PACKETS
312
MULTIPLEX THE QUEUED PACKETS INTO A SINGLE STREAM
314
REMODULATE SINGLE STREAM OF PACKETS
316
TRANSMIT REMODULATED STREAM TO IRD

Fig. 3

SATELLITE RECEIVING SYSTEM WITH TRANSMODULATING OUTDOOR UNIT

TECHNICAL FIELD

[0001] This invention relates to architectures for home digital satellite receiving systems.

BACKGROUND

[0002] Home satellite receiving systems have grown in popularity over the years. People living in rural areas were early adopters, as these people were often underserved by cable and regional broadcast networks. They mounted large dish receivers in their fields or backyards to enable satellite reception of a broader selection of programming. As transmission technology improved, the dish size decreased, paving the way for wider adoption in residential and urban areas. The dish functions as a passive reflector to focus signals received from the satellite onto a low noise block (LNB) element. Signals are transmitted in the microwave range of 11.7 to 12.2 GHz, and once received, are translated to multiple transponder frequencies ranging from 950 to 1450 GHz.

[0003] Early home satellite receiving systems were equipped with one tuner to tune to one transponder. The tuner resided in an indoor unit, often referred to as the integrated receiver/decoder (IRD). The IRD allowed the viewer to select a satellite polarity and a transponder and receive one or more programs carried by the transponder. To choose a different program not in that transponder, the IRD-based tuner may need to select a new polarity so that it could tune to the correct transponder for the desired program.

[0004] With the growth in popularity of personal video recorders (e.g., digital video recorders, such as UltimateTV®-brand system from Microsoft Corporation), some satellite receiving systems are now equipped with multiple tuners. This allows the viewer to watch one program while recording another. The tuners are capable of tuning to different transponders independently of each other, thereby enabling reception of multiple signals. The signals are conducted from the outdoor receiving dish to the indoor IRD via multiple cables, one for each tuner. As an example, the UltimateTV®-brand system from Microsoft Corporation is equipped with two tuners, and two coaxial cables are employed to interconnect the satellite receiver with the system.

[0005] It would be an improvement, however, if home satellite receiving systems could be equipped with multiple tuners, yet not require such cumbersome cabling.

SUMMARY

[0006] A home satellite receiving system employs a transmodulating outdoor unit (ODU) that aggregates the multiple signals received by a satellite receiver into an integrated bitstream, which can then be transmitted over a single coaxial cable to the indoor IRD. In the described implementation, the ODU has multiple tuners to tune to multiple satellite signals. The ODU demodulates those signals into respective streams of data packets and selects subsets of the data packets that belong to viewer-specified programs, while filtering out unwanted data packets. The ODU then constructs an integrated bitstream from the selected data packets and modulates that bitstream for transmission to the indoor IRD. This facilitates transfer of multiple programs from different satellite sources over a single coaxial cable to the indoor IRD. The indoor IRD reconstructs the packet stream timing for the viewer-specified programs from the integrated bitstream.

BRIEF DESCRIPTION OF THE DRAWINGS

[0007] **FIG. 1** illustrates a home satellite receiving system in which a transmodulating outdoor unit (ODU) may be implemented.

[0008] **FIG. 2** is a block diagram of the transmodulating ODU.

[0009] **FIG. 3** is a flow diagram of an exemplary process for receiving signals from multiple satellites and producing a single data stream for input to an in-home IRD.

DETAILED DESCRIPTION

[0010] The following discussion is directed to a home satellite receiving system equipped with an outdoor unit (ODU) that is capable of concurrently receiving multiple signals from different satellite sources and/or polarities of one satellite and producing a single data stream that can be transmitted to an indoor integrated receiver/decoder (IRD) over a single coaxial cable. The indoor IRD demodulates the data stream and routes the data to other devices for display and/or storage. By equipping the home satellite receiving system with the transmodulating ODU, the indoor IRD can be manufactured more simply, thereby reducing the costs of IRDs.

[0011] The home satellite receiving system is described in the context of receiving digital video content. Representative video content includes such things as movies, television programs, commercials, live events, and so on. While the system is described as receiving video content, it can be used to record other forms of streaming content, such as audio.

[0012] Exemplary Environment

[0013] **FIG. 1** shows an exemplary environment **100** in which a home satellite receiving system **102** can be implemented. Satellite receiving system **102** is illustrated as residing at a viewer's home **104**. A satellite broadcaster **110** has a broadcasting system **112** that packages the video content into digital packets for transmission over a satellite network. The video content originates from a live feed received at the broadcaster **110**, or from stored content kept on storage disks **114**. An uplink transmitter **116** transmits the stream of packets as a modulated signal to one or more orbiting satellites, represented by satellites **120(1)**, **120(2)**, and **120(3)**. The target satellite retransmits the modulated signal to the home satellite receiving system **102**.

[0014] The home satellite receiving system **102** has a satellite receiver **130** that is mounted outside of the viewer's home **104** to receive the signals from the multiple satellites **120(1)-120(3)**. Each satellite transmits signals on two different polarities: right hand polarity and left hand polarity. In a three satellite architecture, the home satellite receiving system **102** could be called upon to receive up to six different signals.

[0015] The satellite receiver **130** has a passive reflector dish **132** that reflects satellite signals received from the satellites **120(1)-120(3)** onto a low noise block (LNB) element **134**. The satellite receiver **130** passes the multiple signals over corresponding conductors or cables **136** to an outdoor unit (ODU) **140**. As its name implies, the outdoor unit **140** is mounted externally of the viewer's home **104** and proximal to the receiver **130** so that the cables **136** are relatively short in length. The ODU **140** may be located, for example, on the back of the dish **132** or mounted at or near its supporting base.

[0016] The ODU **140** tunes to multiple signals, demodulates the signals to recover the data packets, and filters the data packets based on their program identifier (PID). The ODU **140** then statistically multiplexes multiple packet streams for multiple programs into a single data stream and modulates the single data stream. Because the ODU **140** is capable of demodulating multiple signals, producing a single data stream, and then remodulating that data stream for transmission to the IRD, the ODU is referred to as a "transmodulating" device.

[0017] The transmodulating ODU **140** transmits the modulated data stream over a single cable **142** to one or more IRDs **150** inside of the viewer's home **104**. The IRDs **150** demodulates the stream of packets and routes the packets to a set-top box **160** (or other decoder unit) directly, or via a home network (not shown), for display on a television **162**. Multiple IRDs may be used in a viewer's home to facilitate satellite reception control from different venues and televisions in the home.

[0018] The viewer enters commands to control satellite reception via the set-top box **160** using, for example, a remote control handset. The set-top box **160** passes these commands to the IRD **150**, which transmits them to the transmodulating ODU **140** over the cable **142**, or some other conductor (not shown). Based on the viewer command, the ODU **140** tunes to the appropriate transponder frequency of a band polarity from a designated satellite, and filters the demodulated packets to obtain the packets for the viewer-designated programs.

[0019] Exemplary ODU

[0020] **FIG. 2** shows an exemplary implementation of the transmodulating ODU **140**. It has multiple inputs to receive multiple signals from the satellites. In the illustrated implementation, there are six inputs **202(1)**, **202(2)**, . . . , **202(6)** to receive two polarities from each of the three satellites **120(1)-120(3)**. The inputs are coupled to a switch **204**, which connects the inputs to various tuner/demodulator pairs **206(1)**, **206(2)**, . . . , **206**(N).

[0021] Each tuner/demodulator pair has a tuner **208(1)**, **208(2)**, . . . , **208**(N) and an associated demodulator **210(1)**, **210(2)**, . . . , **210**(N). The tuner **208** tunes to individual transponder frequencies as directed by viewer-entered commands. The viewer-entered commands are sent to the ODU **140** from the IRD **150**, and routed to a processor **212**, which directs the tuners **208(1)-208**(N) to tune to the desired transponder frequencies.

[0022] As the tuned signal is received, the associated demodulator **210(1)-210**(N) demodulates the signal to recover a bitstream. One exemplary demodulated bitstream contains data coded at 30 Mbits/second. The bitstream consists of digital data packets, as represented by packets **214**. Each packet contains a header, content (video, audio, etc. in compressed or non-compressed form), redundancy, and so on. Each packet header includes the program identifier (PID) **216** that associates the individual packets with a program (e.g., television show, on-demand movie, newscast, sports event, etc.).

[0023] The number of signals that the ODU **140** can concurrently receive depends on the number of tuner/demodulator pairs **206**. There is one tuner/demodulator **19** pair **206** for each signal. For instance, to receive six different signals simultaneously from the three satellites **120(1)-120(3)**, the ODU **140** is equipped with six tuner/demodulator pairs **206** (i.e., N=6).

[0024] The demodulated streams of packets are passed from the tuner/demodulator pairs **208(1)-208**(N) to associated demultiplexers **220(1)-220**(N) for selection of one or more individual programs. There is one demultiplexer **220** for each tuner/demodulator pair **206**. Each demodulated packet stream typically contains packets for multiple programs. For each stream, the associated demultiplexer **208** selects packets for requested programs based on the PID **216** found in the header.

[0025] The processor **212** instructs the demultiplexers **220** of the desired PID **216** in response to a program selection made by the viewer. This program selection is conveyed to the processor **212** from the IRD **150**. By selecting the packets with the appropriate PID, the demultiplexers **208** operate as a filter to filter out unwanted data packets having PIDs associated with programs that are not selected by the viewer. This reduces the bitstream density, thereby improving bandwidth downstream on the single cable **142**. For example, the demultiplexing process might reduce the bitstream from, say, 30 Mbits/second to 5 Mbits/second.

[0026] The selected packets are time stamped with a local time by time stamping units **222(1)-222**(N). The localized time stamp will be used to reconstruct the packet stream timing for various programs at the IRD **150**, as described below. Until this point in the transmodulating process, the packets in individual streams are handled with constant broadcast delay. Once they are demultiplexed and time stamped, however, the packets are handled at variable rates until reconstructed at the indoor IRD **150**. The variable delay between packets allows the multiple streams to be flexibly integrated into a common stream for transmission.

[0027] The selected packets are stored in respective queues **230(1)**, **230(2)**, . . . , **230**(N). There is one queue **230** for each tuner/demodulator pair **206**. Through this point in the processing, the ODU **140** has maintained the data packets in their respective streams. That is, queue **230(1)** holds the filtered packets received via tuner **208(1)** and demodulated by demodulator **210(1)**. Similarly, queue **230(2)** holds the filtered packets received via tuner **208(2)** and demodulated by demodulator **210(2)**, and so on. The packets from different streams are passed into their respective queues at different rates. The queues **230** temporarily store the packets from different streams for subsequent construction of an integrated bitstream having packets from multiple programs.

[0028] The queued packets from queues **230**(l)-**230**(N) are assembled by a multiplexer **240** into a single data stream.

The multiplexer **240** effectively aggregates data packets from different programs into a common stream. The multiplexer **240** chooses the packets from the various queues for assembly in the data stream according to any one of many different selection criteria. For instance, the multiplexer **240** might choose packets from the various queues according to the local time stamp on the packets. Alternatively, the multiplexer may iteratively take one packet at a time from each queue in a rotational cycle. In still another implementation, the ODU may implement a FIFO (first in first out) scheme. Another possibility is for the ODU to prioritize requests and select packets in accordance with the priority assigned to the requested program. Packets might also be selected based on queue depth by taking packets from the queue with the most packets, or selecting packets when individual queues reach a predetermined number of packets.

[**0029**] The demultiplexer **240** outputs the single bitstream to a remodulator **250**, which modulates the bitstream for transmission to the IRD **150**. The remodulator **250** can utilize a conventional modulation technique, such as QAM, COFDM, QPSK, 8PSK, and the like. The single data stream can be modulated at the same or different frequency as the satellite signal originally received by the ODU. The modulated bitstream is passed over the coaxial cable **142** to one or more IRDs **150**. In this manner, the IRDs **150** receive a modulated bitstream as expected from the satellite receiver. However, this modulated bitstream contains packets from multiple satellite signals, as opposed to just one.

[**0030**] The IRD **150** has a demodulator **252** to demodulate the bitstream received from ODU **140**. The IRD **150** then reconstructs the timing of the packets for various programs using the local time stamps applied by the ODU. This reconstruction restores the intended delay between packets in a common program stream. The IRD **150** is also coupled to supply instructions to the ODU, either via the cable **142** or another connection (wire-based or wireless). The instructions pertain to such operations as tuning and program selection. The instructions are handled by the processor **212**. Additionally, the IRD can provide feedback to improve or modify transmission of the modulated signal over the cable **142**. The processor **212** receives the feedback and makes adjustments to the remodulator **250**.

[**0031**] One beneficial feature of the ODU **140** is the ability to select programs individually, rather than being constrained to selecting transponder polarities. By demodulating the signal and selecting packets based on program identifiers (PIDs), the ODU is able to filter unwanted packets and thereby increase the bandwidth efficiency on the coaxial cable **142**.

[**0032**] Another advantageous feature of the system is that the complex demodulation of the satellite signals is handled at the ODU **140**, rather than the IRD **150**. The ODU can then implement a different, less complex demodulation scheme for the local modulation performed by the remodulator **250**. For instance, the remodulator **250** may use a simple modulation scheme, such as QSPK, to transmit the data to the IRD. The IRD can thus be designed with less complex demodulation components, resulting in a less expensive device. This allows consumers to purchase multiple IRDs for their home entertainment architecture, all of which can be supported by a single ODU **140**.

[**0033**] Another advantage of the system is that it affords a controlled signal environment, which is not susceptible to interference. A weak satellite signal can be decoded close to the initial receiver, thereby improving recovery of the signal. This permits use of simpler and less sophisticated ODU tuning and demodulator components. Additionally, adjusting for any changes in the modulation scheme used by the satellite involves merely replacing the ODU, rather than the in-home IRD(s).

[**0034**] Satellite Reception and Transmodulation

[**0035**] **FIG. 3** shows an exemplary process **300** for operating the home satellite receiving system to receive signals from multiple satellites and produce a single data stream for input to an in-home IRD. The process will be described with reference to the implementation of the transmodulating ODU **140** described in **FIGS. 1 and 2**. The process **300** is implemented by a combination of software, firmware, and hardware. In the case of software and firmware, process **300** represents a set of operations that may be implemented as computer-executable instructions that can be executed by one or more processors.

[**0036**] At block **302**, the satellite receiving system **102** receives one or more satellite signals from one or more satellites **120**. These signals may be from different polarities of the same satellite or from different satellites. The multiple tuners **208** in the ODU **140** tune to particular transponder frequencies in the one or more signals.

[**0037**] At block **304**, demodulators **210** demodulate the signals received at the transponder frequencies. The demodulation results in a stream of packets for each received signal. At block **306**, associated demultiplexers **220** demultiplex each stream of packets to select certain packets, and filter others, based on the program identifier (PID) contained in the packets. The desired PIDs are conveyed to the ODU **140** from the IRD **150** based upon user input. The selected packets are time stamped with a local timestamp (block **308**).

[**0038**] At block **310**, the streams of time stamped packets are stored temporarily in respective queues **230**. At block **312**, the multiplexer **240** multiplexes the queued packets from the different streams into a single data stream. The remodulator **250** then modulates the single data stream (block **314**). The data stream may be modulated using a different modulation scheme and at a different modulation frequency than that of the original signal received from the satellite. At block **316**, the ODU transmits the modulated single data stream over the cable **142** to the IRD **150**.

[**0039**] Conclusion

[**0040**] Although the invention has been described in language specific to structural features and/or methodological acts, it is to be understood that the invention defined in the appended claims is not necessarily limited to the specific features or acts described. Rather, the specific features and acts are disclosed as exemplary forms of implementing the claimed invention.

1. A home satellite receiving system comprising:

a satellite receiver to receive multiple signals from one or more satellites;

an intermediary unit to aggregate the multiple signals received by the satellite receiver into a single bitstream for transmission over a local connector; and

a decoding unit connected to receive the single bitstream from the local connector and to decode the single bitstream.

2. A home satellite receiving system as recited in claim 1, wherein the decoding unit comprises an integrated receiver/decoder (IRD).

3. A home satellite receiving system as recited in claim 1, wherein the decoding unit is configured to reside indoors and the intermediary unit is configured to reside outdoors and proximal to the satellite receiver.

4. A home satellite receiving system as recited in claim 1, wherein the local connector comprises a coaxial cable.

5. A home satellite receiving system as recited in claim 1, wherein the intermediary unit comprises multiple tuners.

6. A home satellite receiving system as recited in claim 1, wherein the intermediary unit comprises:

multiple demodulators to demodulate ones of the signals into associated streams of packets;

a data aggregator to construct the single bitstream from the streams of packets; and

a remodulator to modulate the single bitstream for transmission to the decoding unit.

7. A home satellite receiving system as recited in claim 6, wherein the intermediary unit further comprises a filter to remove unwanted packets prior to construction of the single bitstream.

8. A home satellite receiving system as recited in claim 6, wherein the intermediary unit further comprises a filter to filter packets based on program identifiers in the packets that associate the packets with programs.

9. A home satellite receiving system as recited in claim 6, wherein the intermediary unit further comprises a time stamp component to timestamp the packets used to construct the single bitstream.

10. A home satellite receiving system comprising:

a receiver to receive multiple satellite signals; and

an outdoor unit connected to the receiver to demodulate the satellite signals into multiple corresponding streams of data packets, the outdoor unit being configured to form a single bitstream containing the data packets from the multiple streams and modulate the single bitstream for transmission to an indoor device.

11. A home satellite receiving system as recited in claim 10, wherein the outdoor unit demodulates the satellite signals according to a first modulation technique and modulates the single bitstream according to a second modulation technique that is different than the first modulation technique.

12. A home satellite receiving system as recited in claim 10, wherein the outdoor unit comprises:

multiple tuners to tune to the signals; and

multiple demodulators, each demodulator being associated with a corresponding tuner to demodulate the signal received by the corresponding tuner.

13. A home satellite receiving system as recited in claim 10, wherein the outdoor unit facilitates selection of the data packets to be included in the single bitstream based upon a program identifier.

14. A home satellite receiving system as recited in claim 10, wherein the outdoor unit comprises a packet filter to selectively filter data packets from inclusion in the single bitstream.

15. A home satellite receiving system as recited in claim 10, wherein the outdoor unit timestamps the data packets included in the single bitstream with a local time that can be used by the indoor device to reconstruct timing of streams of the data packets.

16. A home satellite receiving system comprising:

a receiver to receive multiple satellite signals; and

an outdoor unit connected to the receiver to demodulate the satellite signals into multiple corresponding streams of data packets, the outdoor unit being configured to select data packets from respective streams based on program identifiers that associate the data packets with programs.

17. A home satellite receiving system as recited in claim 16, wherein the outdoor unit is configured to form a single data stream containing the selected data packets from the multiple streams and modulate the single data stream for transmission to an indoor device.

18. A home satellite receiving system as recited in claim 16, wherein the outdoor unit timestamps the selected data packet with a local time.

19. In a satellite receiving system, an outdoor unit comprising:

multiple tuners to tune to different satellite signals;

multiple demodulators, each demodulator being associated with a corresponding tuner to demodulate an associated signal received by the corresponding tuner into a stream of data packets;

multiple demultiplexers, each demultiplexer being associated with a corresponding demodulator to select a subset of data packets from an associated stream of data packets output by the corresponding demodulator;

multiple queues, each queue being associated with a corresponding demultiplexer to store the subset of data packets selected by the corresponding demultiplexer;

a multiplexer to aggregate the data packets held in the queues into a single data stream; and

a remodulator to modulate the single data stream for local transmission.

20. An outdoor unit as recited in claim 19, wherein the demodulators employ a first modulation technique and the remodulator employs a second modulation technique different from the first modulation technique.

21. An outdoor unit as recited in claim 19, wherein each stream of data packets contains data packets for one or more programs, the demultiplexers being configured to select the subset of data packets according to program identifiers contained in the data packets, each program identifier identifying a program to which the data packet belongs.

22. An outdoor unit as recited in claim 21, further comprising a processor to provide the program identifier to the demultiplexers in response to viewer selection of a program.

23. An outdoor unit as recited in claim 19, further comprising a processor to provide tuning control information to the tuners.

24. An outdoor unit as recited in claim 19, further comprising a switch to connect multiple satellite receiver connectors with the multiple tuners.

25. An outdoor unit as recited in claim 19, further comprising multiple time stamping units, each time stamping unit being associated with a corresponding demultiplexer to time stamp the subset of data packets selected by the corresponding demultiplexer.

26. A home satellite receiving system comprising:

a satellite receiver;

an indoor decoding unit; and

the outdoor unit as recited in claim 19 coupled to the satellite receiver and to the indoor decoding unit, the outdoor unit being connected to the indoor decoding unit via a single cable over which the single data stream is transmitted.

27. In a satellite receiving system, an outdoor unit comprising:

tuning means for tuning to multiple satellite signals;

demodulating means for demodulating the multiple satellite signals into corresponding bitstreams;

aggregating means for forming a single bitstream from the multiple bitstreams; and

modulating means for modulating the single bitstream for transmission.

28. An outdoor unit as recited in claim 27, wherein the demodulating means and the modulating means employ different modulation schemes.

29. An outdoor unit as recited in claim 27, further comprising storage means for storing the bitstreams independent of one another, the aggregating means integrating the bitstreams from the storage means to form the single bitstream.

30. An outdoor unit as recited in claim 27, further comprising means for selecting content from the bitstreams to be included in the single bitstream based upon whether the content pertains to one or more viewer-specified programs.

31. A home satellite receiving system comprising:

a satellite receiver;

an indoor decoding unit; and

the outdoor unit as recited in claim 27, coupled to the satellite receiver and to the indoor decoding unit, the outdoor unit being connected to the indoor decoding unit via a single cable over which the single bitstream is transmitted.

32. In a satellite receiving system, an outdoor unit comprising:

tuning means for tuning to multiple satellite signals;

demodulating means for demodulating the multiple satellite signals into corresponding streams of data packets, each stream of data packets containing data packets for one or more programs; and

selecting means for selecting a subset of data packets from the streams based upon which programs the data packets belong.

33. An outdoor unit as recited in claim 32, wherein each data packet has a program identifier to associate the data packet with a program, and the selecting comprises choosing the subset of data packets according to program identifiers in the data packets.

34. An outdoor unit as recited in claim 32, further comprising means for queuing the subset of data packets selected from the streams.

35. An outdoor unit as recited in claim 32, further comprising:

means for constructing a single data stream from the subset of data packets selected by the selecting means; and

modulating means for modulating the single data stream for transmission.

36. A method comprising:

tuning to multiple satellite signals;

demodulating the signals into respective streams of data packets;

aggregating the data packets from the respective streams into a single data stream; and

modulating the single data stream for local transmission.

37. A method as recited in claim 36, wherein the demodulating and the modulating utilize different modulation schemes.

38. A method as recited in claim 36, further comprising selecting ones of the data packets from the respective streams for inclusion in the single data stream based upon program identifiers contained in the data packets.

39. A method as recited in claim 36, further comprising transmitting the single data stream over a single coaxial cable.

40. In a satellite receiving system having a receiver, an outdoor unit, and an indoor unit, a method for operating the outdoor unit comprising:

tuning to multiple satellite signals;

demodulating the signals into respective streams of data packets, each stream of data packets containing data packets for one or more programs; and

selecting ones of the data packets from the streams according to which programs the data packets belong.

41. A method as recited in claim 40, further comprising:

forming a single data stream from the selected data packets;

modulating the single data stream; and

transmitting the single data stream to the indoor unit.

42. In a satellite receiving system having a receiver, an outdoor unit, and an indoor unit, a method for operating the outdoor unit comprising:

tuning to multiple satellite signals being received by the receiver;

demodulating the signals into respective streams of data packets;

selecting subsets of the data packets from the respective streams;

time-stamping the selected data packets with a local timestamp;

queuing the selected data packets in respective queues;

forming a single data stream from the selected data packets stored in the queues;

modulating the single data stream; and

transmitting the modulated single data stream to the indoor unit.

43. A method as recited in claim 42, wherein the demodulating and the modulating utilize different modulation schemes.

44. A method as recited in claim 42, wherein the selecting is based on program identifiers contained in the data packets.

45. A method as recited in claim 42, wherein the timestamps are used by the indoor unit to reconstruct timing of the multiple streams of data packets.

46. A method as recited in claim 42, wherein the transmitting comprises transmitting the data stream over a single coaxial cable.

* * * * *