US006493873B1

(12) **United States Patent**
Williams

(10) **Patent No.: US 6,493,873 B1**
(45) **Date of Patent: *Dec. 10, 2002**

(54) **TRANSMODULATOR WITH DYNAMICALLY SELECTABLE CHANNELS**

(75) Inventor: **Jim C. Williams**, Anaheim, CA (US)

(73) Assignee: **Hughes Electronics Corporation**, El Segundo, CA (US)

(*) Notice: Subject to any disclaimer, the term of this patent is extended or adjusted under 35 U.S.C. 154(b) by 0 days.

This patent is subject to a terminal disclaimer.

(21) Appl. No.: **09/008,879**

(22) Filed: **Jan. 20, 1998**

Related U.S. Application Data

(63) Continuation-in-part of application No. 08/787,336, filed on Jan. 27, 1997.

(51) **Int. Cl.**[7] **H04N 7/18**; H04N 7/173

(52) **U.S. Cl.** **725/78**; 725/71; 725/95; 725/98; 725/118

(58) **Field of Search** 725/64, 71, 72, 725/95, 98, 78, 118

(56) **References Cited**

U.S. PATENT DOCUMENTS

3,833,757	A	9/1974	Kirk et al.	178/5.6
3,935,534	A	1/1976	Lewis et al.	325/308
4,145,720	A	3/1979	Weintraub et al.	358/194

(List continued on next page.)

FOREIGN PATENT DOCUMENTS

EP	27 14774	10/1978
EP	0 144 770	6/1985
EP	0 730 383 A2	9/1996
GB	2 288 714	10/1995
JP	56-47183	4/1981
JP	60-182887	9/1985
JP	2-13030	1/1990
JP	8-242436	3/1995
JP	8-274711	3/1995
JP	8-294108	4/1995
JP	8-317371	5/1995
WO	WO 97/01931	1/1997

OTHER PUBLICATIONS

CellularVision USA, Inc., CV CellularVision 3,333,000 Shares Cellular Vision USA, Inc. Common Stock, Prospectus dated Feb. 8, 1996, pp. 3–5, 8–14, 21–42.

Darcie, T.E., "Subcarrier Multiplexing for Lightwave Networks and Video Distribution Systems," *IEEE Journal on Selected Areas in Communications*, 8(7):1240–1248 (Sep., 1990).

(List continued on next page.)

Primary Examiner—Bhavesh Mehta
Assistant Examiner—Kieu-Oanh Bui
(74) *Attorney, Agent, or Firm*—John A. Crook; Michael W. Sales

(57) **ABSTRACT**

A system for redistributing a broadband audio-visual-data signal to a multiplicity of receiver units within a multiple dwelling unit (MDU) includes a main receiving antenna that receives a broadband video/audio/data signal having a number of individual program multiplex signals therein and a transmodulator device that transmodulates a selected subset of the individual program multiplex signals associated with the broadband signal from a first modulation scheme to a second modulation scheme. The transmodulated signals are broadcast over a cable network, along with terrestrial signals, to individual receiver units at the MDU. The receiver units send requests for user-selected ones of the individual program multiplex signals to the transmodulator device, demodulate the transmodulated and/or terrestrial signals and provide user-specified channels to television sets for display.

25 Claims, 7 Drawing Sheets

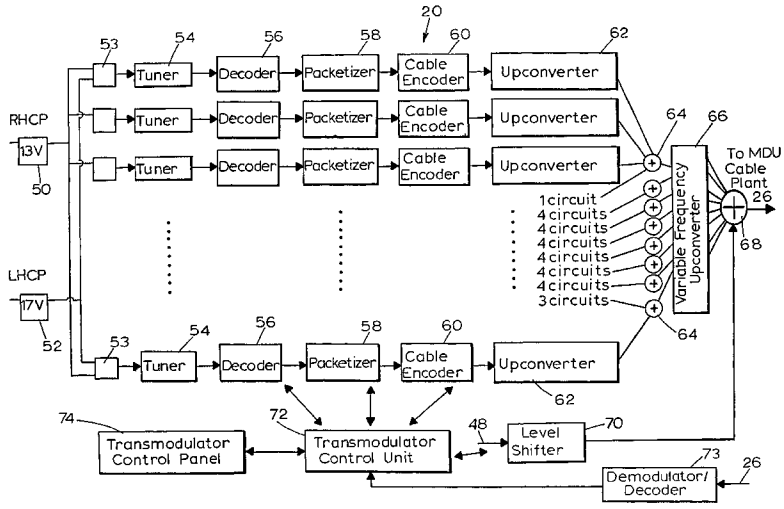

Comcast, Ex. 1155

U.S. PATENT DOCUMENTS

4,450,477	A		5/1984	Lovett 358/86
4,475,123	A		10/1984	Dumbauld et al. 358/114
4,475,242	A		10/1984	Rafal et al. 455/3
4,592,093	A		5/1986	Ouchi et al. 455/4
4,608,710	A		8/1986	Sugiura 455/4
4,695,880	A		9/1987	Johnson et al. 358/86
4,709,418	A		11/1987	Fox et al. 455/612
4,710,956	A		12/1987	Rast 380/20
4,710,972	A		12/1987	Hayashi et al. 455/179
4,747,160	A		5/1988	Bossard 455/33
4,805,014	A		2/1989	Sahara et al. 358/86
4,823,386	A		4/1989	Dumbauld et al. 380/13
4,901,367	A		2/1990	Nicholson et al. 455/5
4,916,532	A		4/1990	Streck et al. 358/83
4,930,120	A		5/1990	Baxter et al. 370/73
4,935,924	A		6/1990	Baxter 370/73
4,959,862	A		9/1990	Davidov et al. 380/10
4,975,771	A		12/1990	Kassatly 358/146
5,012,350	A		4/1991	Streck et al. 358/335
5,023,931	A		6/1991	Streck et al. 455/21
5,027,430	A		6/1991	Yamauchi et al.
5,029,003	A		7/1991	Jonnalagadda 358/142
5,038,402	A		8/1991	Robbins 455/3
5,045,948	A		9/1991	Streck et al. 358/194.1
5,073,930	A		12/1991	Green et al. 380/10
5,077,607	A		12/1991	Johnson et al. 358/86
5,101,499	A		3/1992	Streck et al. 455/4
5,105,268	A		4/1992	Yamanouchi et al. 358/84
5,125,100	A		6/1992	Katznelson 455/6.1
5,136,411	A		8/1992	Paik et al. 359/125
5,155,591	A		10/1992	Wachob
5,168,356	A		12/1992	Acampora et al.
5,173,775	A		12/1992	Walker 358/141
5,200,823	A		4/1993	Yoneda et al. 358/146
5,214,501	A		5/1993	Cavallerano et al. 358/12
5,220,420	A		6/1993	Hoarty et al. 358/86
5,231,494	A		7/1993	Wachob 358/146
5,257,396	A		10/1993	Auld et al. 455/2
5,276,904	A		1/1994	Mutzig et al.
5,283,639	A		2/1994	Each et al. 348/6
5,293,633	A		3/1994	Robbins 455/3.1
5,394,559	A		2/1995	Hemmie et al. 455/5.1
5,408,259	A		4/1995	Warwick et al. 348/6
5,412,720	A		5/1995	Hoarty 380/15
5,450,392	A		9/1995	Waltrich 370/6
5,475,498	A		12/1995	Radice 358/335
5,483,663	A		1/1996	Tawil
5,483,686	A		1/1996	Saka et al. 455/182.2
5,504,816	A		4/1996	Hamilton et al. 380/20
5,512,936	A		4/1996	Burton et al. 348/11
5,521,631	A		5/1996	Budow et al.
5,572,517	A		11/1996	Safadi 370/50
5,742,640	A		4/1998	Haou et al.
5,760,819	A		6/1998	Sklar et al.
5,787,335	A		7/1998	Novak
5,790,175	A		8/1998	Sklar et al.
5,835,128	A		11/1998	Macdonald et al.
5,920,626	A	*	7/1999	Durden et al. 380/10
5,970,386	A	*	10/1999	Williams 455/4.1
6,104,908	A	*	8/2000	Schaffner et al. 455/3.2
6,134,419	A	*	10/2000	Williams 455/6.2

OTHER PUBLICATIONS

European Telecommunication Standard, "Digital broadcasting systems for television, sound and data services; Satellite Master Antenna Television (SMATV) distribution systems," TM 1285 Revision 1, Draft pr ETS 300 473, Nov., 1994, Source: EBU/ETSI JTC, Reference: DE/JTC–DVB–7–1, European Telecommunications Standard Institute, European Broadcasting Union, France, pp. 3–25 (1994).

Lieberman, D., "Wideband Distribution Equipment for Cable Television (CATV)," *Automatic Electric Technical J.*, 12(4):160–171 (Oct., 1970).

Olshansky et al., "Subcarrier Multiplexed Coherent Lightwave Systems for Video Distribution," *IEEE Journal on Selected Areas in Communications*, 8(7):1268–1275 (Sep., 1990).

Terry, J., "Alternative Technologies and Delivery Systems for Broadband ISDN Access: Rapid deployment of B–ISDN depends upon collaboration among potential transport, delivery, and service providers–especially for on–demand video," *IEEE Communications Magazine*, pp. 58–64 (Aug., 1992).

* cited by examiner

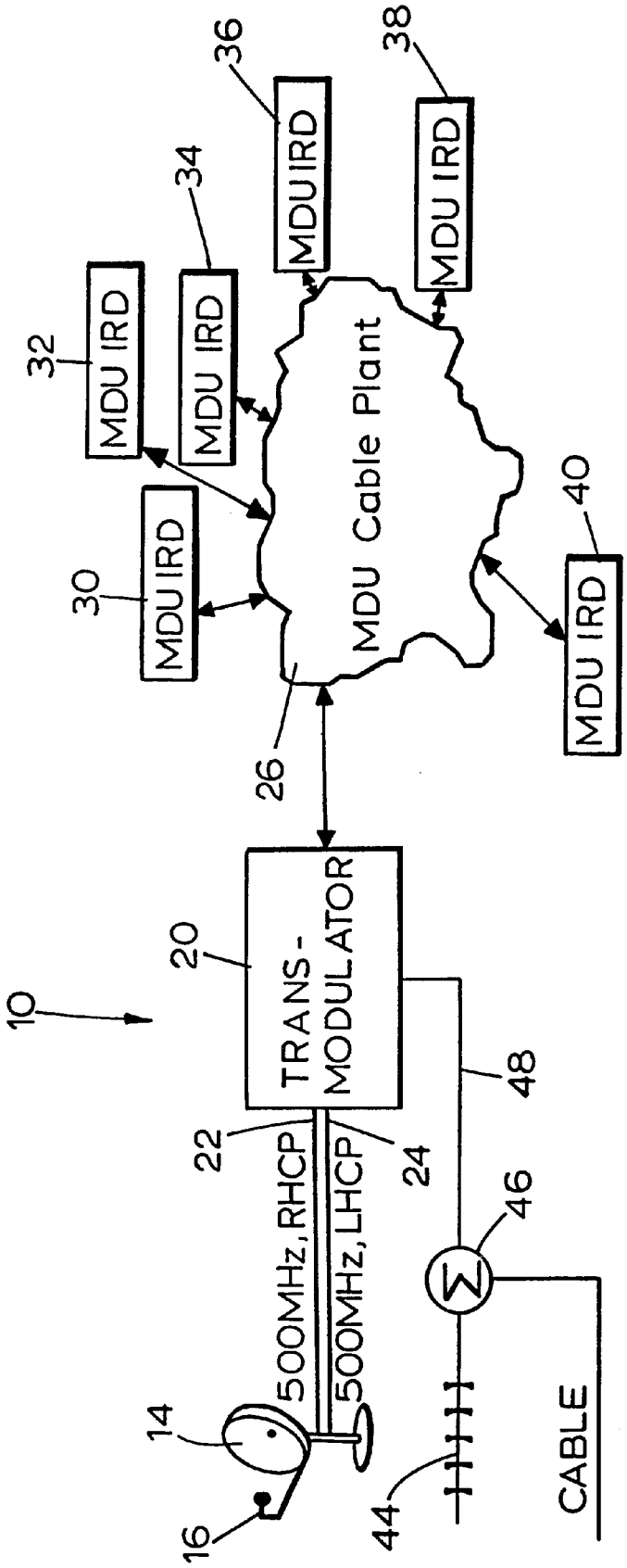
10
20
TRANS-
MODULATOR
22
24
500MHz, RHCP
500MHz, LHCP
14
16
26
MDU Cable Plant
30
MDU IRD
32
MDU IRD
34
MDU IRD
36
MDUIRD
38
MDU IRD
40
MDU IRD
44
46
48
CABLE

FIG. 1

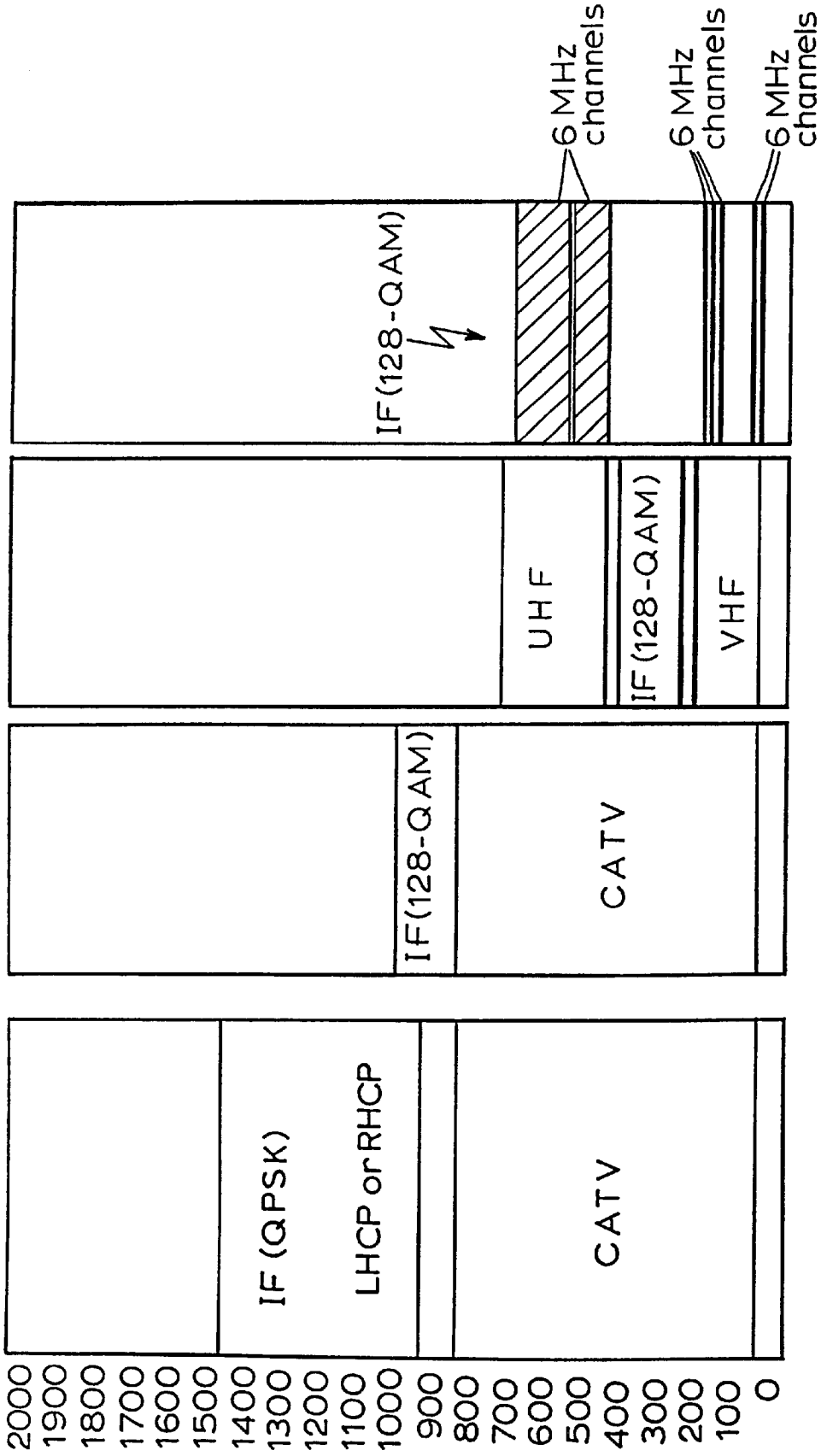
2000
1900
1800
1700
1600
1500
1400
1300
1200
1100
1000
900
800
700
600
500
400
300
200
100
0
IF (QPSK)
LHCP or RHCP
CATV
IF(128-QAM)
CATV
UHF
IF (128-QAM)
VHF
IF (128-QAM)
6 MHz channels
6 MHz channels
6 MHz channels

FIG. 2

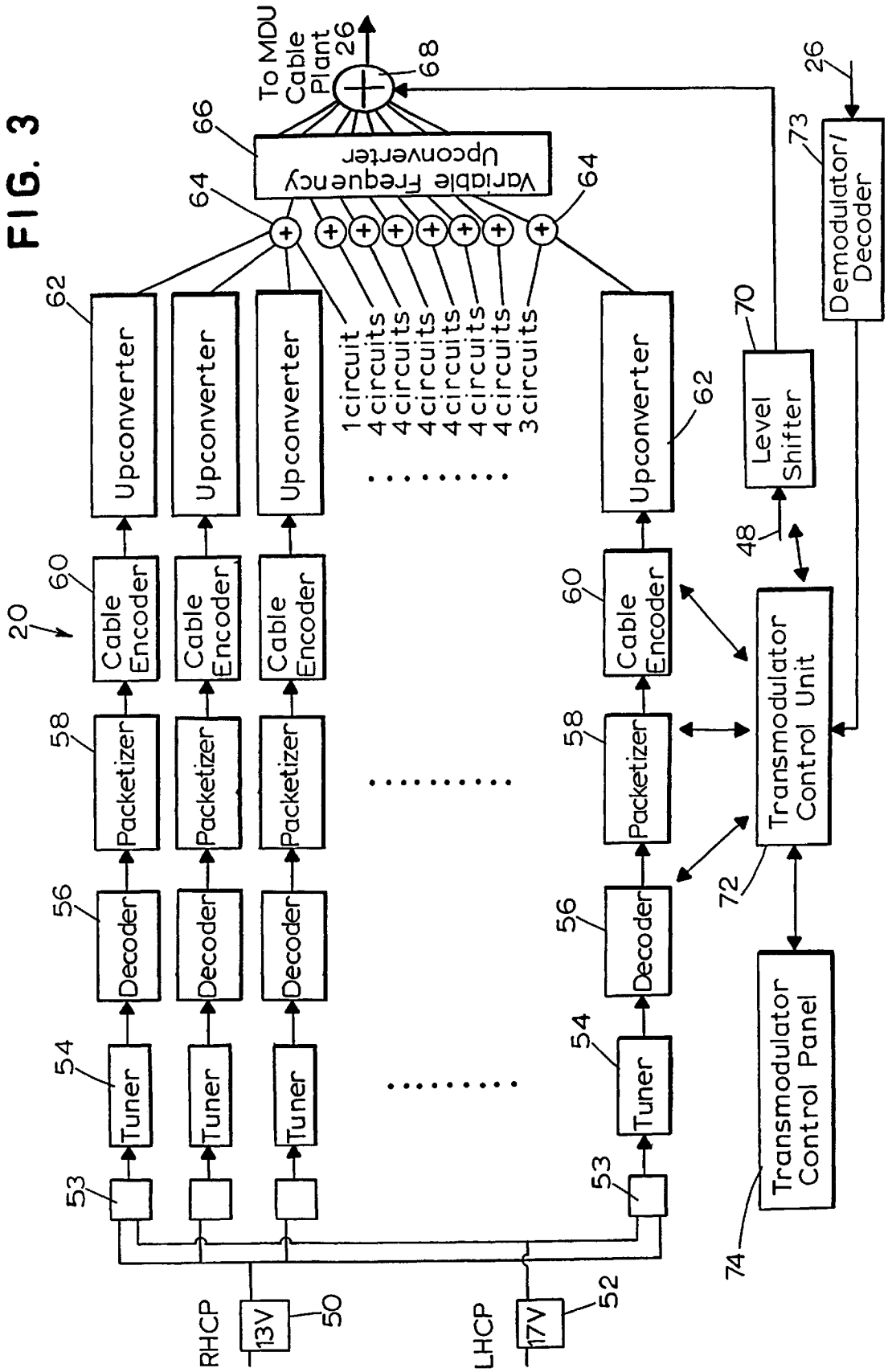
FIG. 3
To MDU Cable Plant 26
68
66
Variable Frequency Upconverter
64
64
62
Upconverter
Upconverter
Upconverter
Upconverter
1 circuit
4 circuits
4 circuits
4 circuits
4 circuits
4 circuits
4 circuits
3 circuits
60
Cable Encoder
Cable Encoder
Cable Encoder
Cable Encoder
20
58
Packetizer
Packetizer
Packetizer
Packetizer
56
Decoder
Decoder
Decoder
Decoder
54
Tuner
Tuner
Tuner
Tuner
53
53
RHCP
13V
50
LHCP
17V
52
26
73
Demodulator/ Decoder
70
Level Shifter
48
Transmodulator Control Unit
72
Transmodulator Control Panel
74

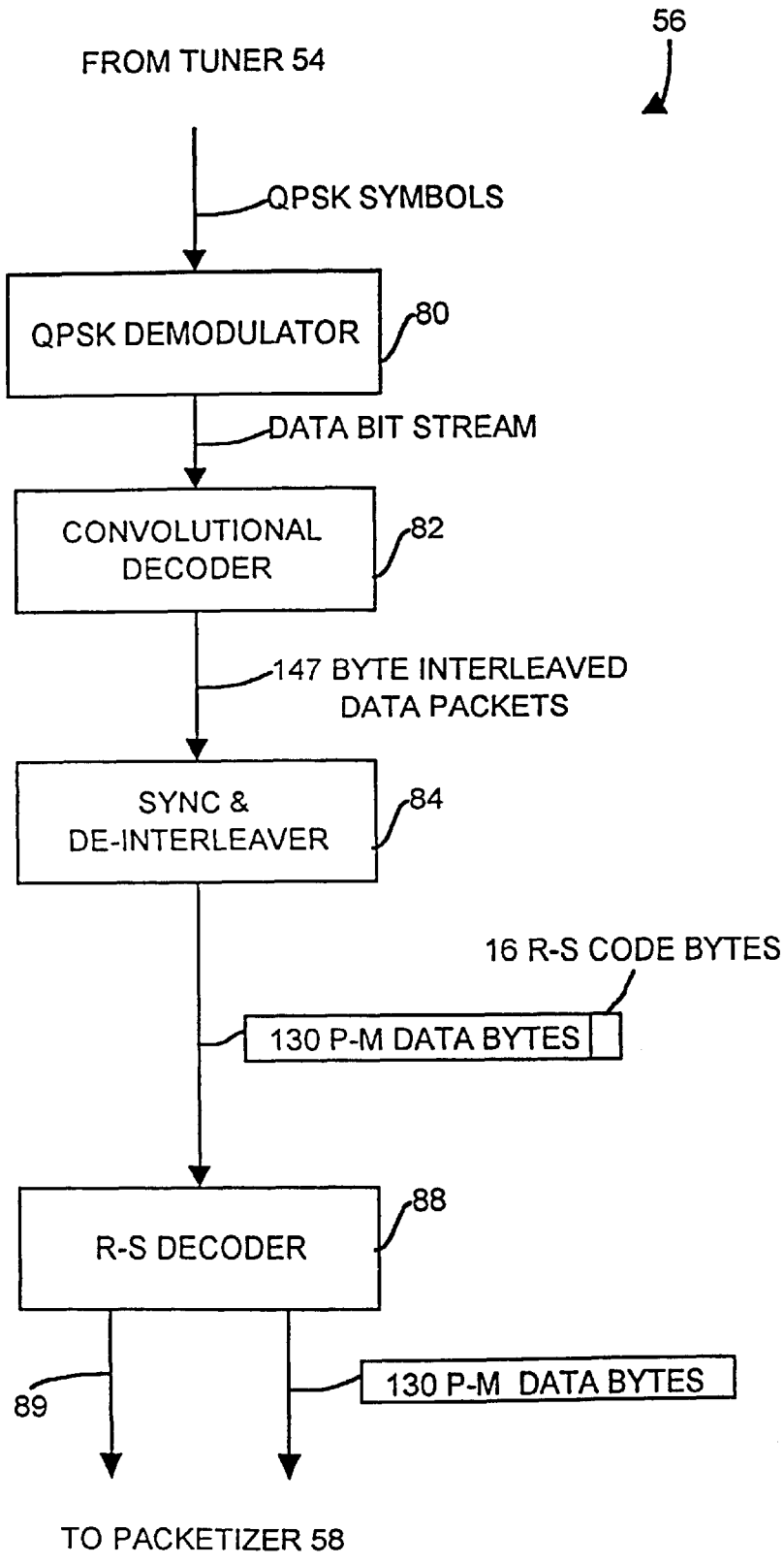
56
FROM TUNER 54
QPSK SYMBOLS
QPSK DEMODULATOR
80
DATA BIT STREAM
CONVOLUTIONAL DECODER
82
147 BYTE INTERLEAVED DATA PACKETS
SYNC & DE-INTERLEAVER
84
16 R-S CODE BYTES
130 P-M DATA BYTES
R-S DECODER
88
89
130 P-M DATA BYTES
TO PACKETIZER 58

FIG. 4

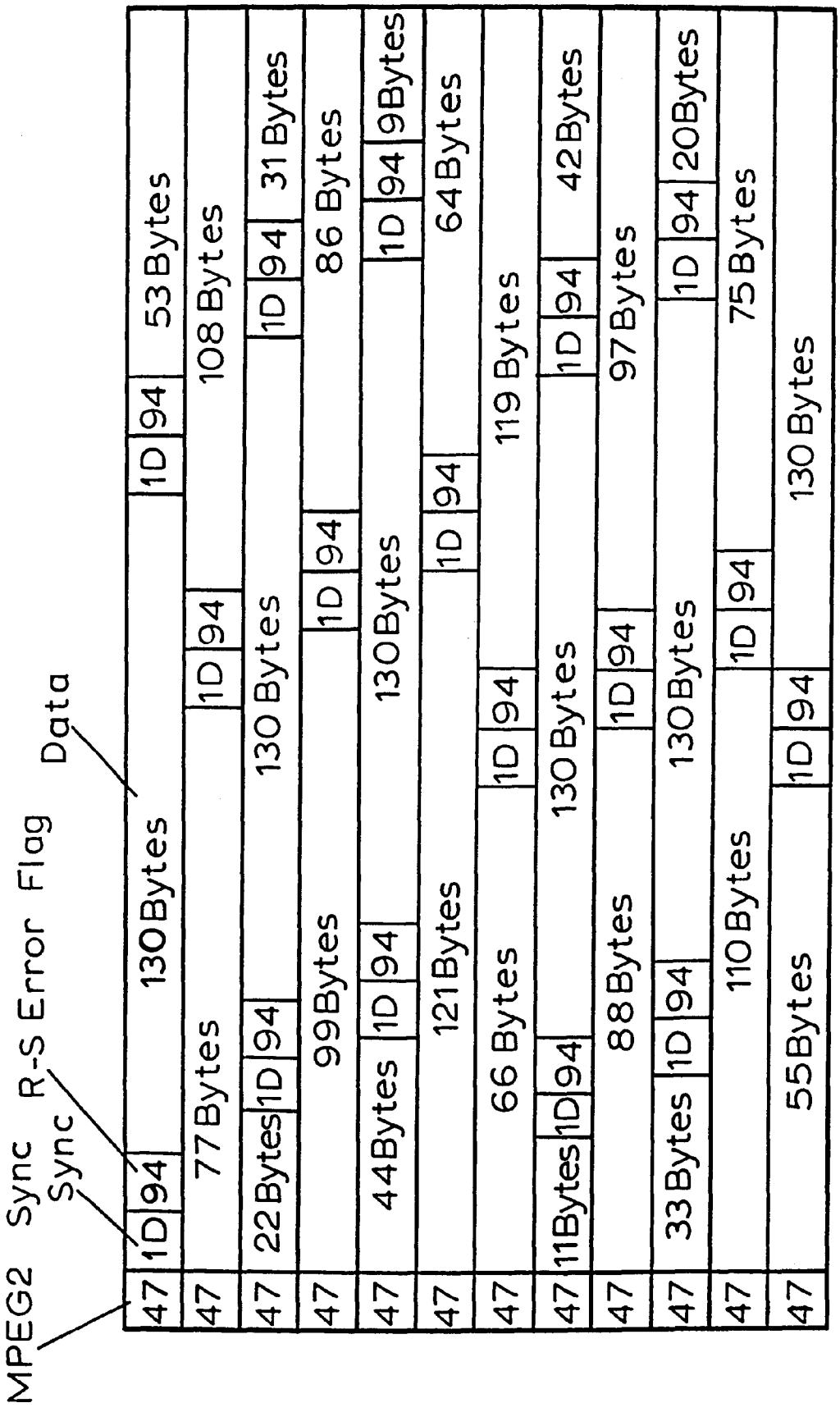
MPEG2 Sync
Sync
R-S Error Flag
Data
47
1D
94
130Bytes
53 Bytes
77 Bytes
108 Bytes
22 Bytes
130 Bytes
31 Bytes
99Bytes
86 Bytes
44Bytes
130Bytes
9Bytes
121Bytes
64 Bytes
66 Bytes
119 Bytes
11Bytes
42Bytes
88 Bytes
97 Bytes
33 Bytes
20Bytes
110 Bytes
75 Bytes
55Bytes

FIG. 5

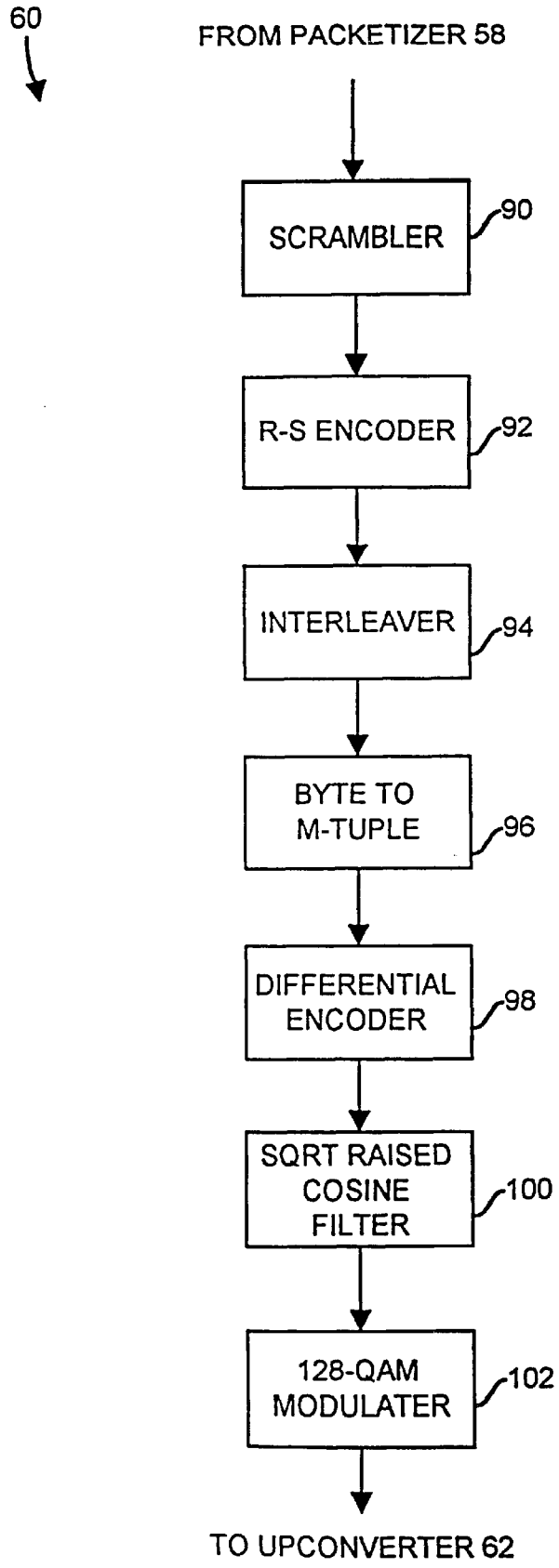
60
FROM PACKETIZER 58
SCRAMBLER
90
R-S ENCODER
92
INTERLEAVER
94
BYTE TO
M-TUPLE
96
DIFFERENTIAL
ENCODER
98
SQRT RAISED
COSINE
FILTER
100
128-QAM
MODULATER
102
TO UPCONVERTER 62

FIG. 6

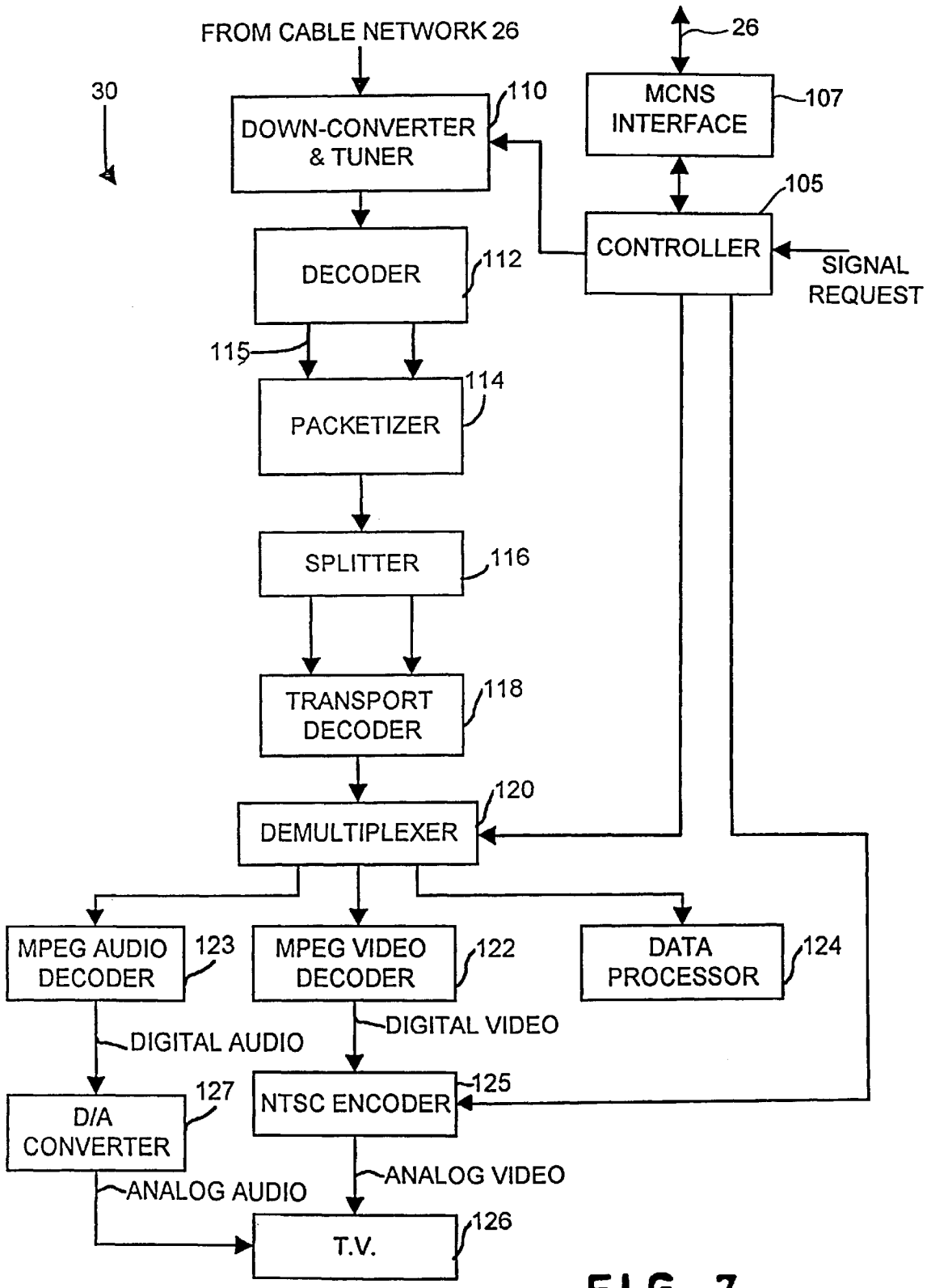
FROM CABLE NETWORK 26
26
30
DOWN-CONVERTER & TUNER
110
MCNS INTERFACE
107
105
CONTROLLER
SIGNAL REQUEST
DECODER
112
115
PACKETIZER
114
SPLITTER
116
TRANSPORT DECODER
118
DEMULTIPLEXER
120
MPEG AUDIO DECODER
123
MPEG VIDEO DECODER
122
DATA PROCESSOR
124
DIGITAL AUDIO
DIGITAL VIDEO
D/A CONVERTER
127
NTSC ENCODER
125
ANALOG AUDIO
ANALOG VIDEO
T.V.
126

FIG. 7

TRANSMODULATOR WITH DYNAMICALLY SELECTABLE CHANNELS

RELATED APPLICATION

This application is a continuation-in-part of U.S. patent application Ser. No. 08/787,336, entitled "Transmodulated Broadcast Delivery System for use in Multiple Dwelling Units," filed Jan. 27, 1997.

BACKGROUND OF THE INVENTION

(a) Field of the Invention

The present invention relates generally to signal distribution systems and, more particularly, to audio/visual/data signal distribution systems that distribute satellite signals typically in conjunction with standard terrestrial and/or cable signals to a plurality of individual receivers within one or more multiple dwelling units.

(b) Description of Related Art

Audio/visual/data (A-V) signal distribution systems generally rely on either a cable network or on free-space propagation for delivering A-V signals, such as television signals, to individual users or subscribers. Cable-based A-V signal distribution systems transmit one or more individual A-V signals or "channels" over wire, while free-space propagation systems transmit one or more channels over-the-air, i.e., in a wireless manner. Most large-scale cable and wireless signal distribution systems broadcast a broadband A-V signal having a plurality of individual A-V signals modulated onto one or more carrier frequencies within a discernable frequency band.

Some wireless signal distribution systems use one or more geosynchronous satellites to broadcast a broadband A-V signal to receiving units within a large geographic area while other wireless systems are land-based, using one or more land-based transmitters to broadcast to individual receiver units within smaller geographic areas or cells. A satellite A-V signal distribution system generally includes an earth station that compiles a number of individual A-V programs into a broadband signal, modulates a carrier frequency band with the broadband signal and then transmits (uplinks) the modulated signal to one or more geosynchronous satellites. The satellites amplify the received signals, shift the signals to different carrier frequency bands and transmit (downlink) the frequency shifted signals to earth for reception at individual receiving units.

The uplink and downlink broadband signals of analog satellite systems are usually divided into a plurality of transponder signals, each typically containing a single analog signal. For example, analog satellite systems operating in the so-called "C-band," i.e., between 3.7 GHz and 4.2 GHz, may broadcast a plurality of transponder signals, each including a single frequency modulated analog T.V. channel. In current digital satellite systems, each transponder typically contains a number of individual channels multiplexed into a single data stream, commonly referred to as a program multiplex.

Satellite systems may also broadcast a set of transponder signals at multiple polarizations, for example, at a right-hand circular polarization (RHCP) and at a left-hand circular polarization (LHCP), within the band of carrier frequencies associated with the satellite, effectively doubling the number of channels broadcast by the system.

Satellite signal distribution systems exist for many frequency bands, including the so-called "Ku-band." One known Ku-band direct-to-home satellite system now

in-operation uses an uplink signal having 16 RHCP transponder signals and 16 LHCP transponder signals modulated onto frequency bands between about 17.2 GHz, and about 17.7 GHz. Each of these 32 transponder signals is program-multiplexed to include digital data packets associated with e.g. about five to eight or more individual A-V programs, such as television channels, and is modulated according to a quaternary phase shift keying (QPSK) modulation scheme. The satellites associated with this system shift the uplink transponder signals to carrier frequencies ranging from approximately 12.2 GHz to approximately 12.7 GHz and transmit these frequency-shifted transponder signals back to earth for reception at each of a plurality of individual receiver units.

At the individual receiver units, a receiving antenna, typically comprising a parabolic dish antenna, is pointed in the general direction of the transmitting satellite (or other transmitting location) to receive the broadband QPSK modulated multiplex of A-V signals. Typically, such antennas include a low noise block (LNB) which amplifies, filters and shifts the incoming signal to an intermediate frequency band, such as L-band (between about 1.0 GHz and 2.0 GHz). The representative system, in particular, shifts the satellite signal to the frequency band between about 950 MHz and about 1450 MHz.

Typically, only the RHCP transponder signals or the LHCP transponder signals are mixed down to L-band, depending on which particular A-V channel a user is viewing. However, in systems having a two-channel LNB, both the RHCP and the LHCP transponder signals may be individually shifted down to a 500 MHz portion of L-band (e.g., between 950 MHz and 1450 MHz) and provided, via separate lines, to a set-top box or other integrated receiver and detector (IRD) associated with the receiver unit. At the IRD, an A-V program associated with a particular channel within one of the program-multiplexed transponder signals is decoded and provided to a television or other presentation or processing device for display and/or for processing of transmitted data, audio output, etc. However, because cable lines are inherently frequency limited, typical cables used at receiver sites (such as RG-6 and RG-59) are not capable of simultaneously transmitting all of the received satellite signals (1000 MHz) along with standard CATV signals to the IRD.

Furthermore, the receiving antennas or dishes associated with land-based or satellite-based wireless signal distribution systems are typically large and cumbersome. For example, C-band satellite dishes are generally in the range of four to five feet in diameter and, therefore, require a large amount of operating space. As a result, it can be difficult, if not practically impossible, to install a receiving antenna for each individual unit within a multiple dwelling unit (MDU), such as an apartment, condominium or townhome complex. Reception of a particular satellite signal is made even more difficult in MDUs when, as is generally the case, some of the individual dwelling units therein do not have any walls or outside exposure facing the direction in which the receiving antenna must be pointed, or these dwelling units are shadowed by surrounding buildings or other obstructions.

In the past, these disadvantages have been overcome by placing one or more receiving antennas on, for example, the roof of an MDU and then running cable to each of the individual dwelling units. For example, a system for redistributing a single, off-air signal to multiple buildings in a small geographic area is disclosed in Japanese Patent Document No. 56-47183. However, common L-band multi-user distribution solutions typically used to support single dish

antenna systems are fraught with installation and maintenance problems. For example, significant roll-off or degradation of the television signals may occur in cable systems due to the poor high frequency propagation properties of standard cable lines especially at and above L-band. Broadcasting a received broadband A-V signal over an existing cable network at lower carrier frequencies may prevent the use of that network for other A-V signals, such as standard cable, CATV, UHF and VHF television signals, or may require that the some of the broadband signals or existing cable signals be eliminated due to the bandwidth restrictions of the cable network.

One system proposed by the European Telecommunications Standards Institute (ETSI) in the area of Satellite Master Antenna Television (SMATV) receives a QPSK modulated satellite television signal (which may be combined with terrestrial TV signals) and remodulates this signal according to a 64 quadrature amplitude modulation (64-QAM) technique. The SMATV system then sends this remodulated signal out over cable to one or more adjacent buildings. Likewise, U.S. Pat. No. 5,173,775 discloses a system that remodulates data portions of a satellite television signal from one modulation scheme to another, such as from FM to AM, for retransmission to subscribers. However, these systems do not specifically demonstrate how to propagate remodulated satellite signals and existing cable or terrestrial signals on the same cable line or other transmission channel in an efficient manner or demonstrate how to remodulate and broadcast a large number of transponder signals associated with one or more satellites over the same cable line or other transmission channel to one or more adjacent buildings.

The above-identified parent application discloses a signal redistribution system that transmodulates each of, for example, 32 received satellite transponder signals into a different modulation scheme and transmits each of these transmodulated signals, along with standard terrestrial signals, to each of a set of receivers within an MDU. The transmodulator disclosed in this application includes a separate channel having a satellite signal demodulator coupled to a signal remodulator for each of the received satellite transponder signals. As a result, this transmodulator unit tends to be expensive, especially when used in an MDU which includes fewer satellite signal receivers or subscribers than there are channels in the transmodulator unit, i.e., in MDUs that will never need all of the channels provided by the transmodulator unit.

SUMMARY OF THE INVENTION

The present invention relates to a low cost system and method for distributing a set of program multiplexed A-V signals and, possibly, existing terrestrial signals, to a multiplicity of receiver units within one or more MDUs using an MDU cable network or other transmission channel. According to one aspect of the present invention, a receiving antenna receives a broadband signal from, for example, a satellite or a land-based transmitter. A transmodulator transmodulates selected portions of the broadband signal into a transmodulated signal having a bandwidth that is smaller than that of the received broadband signal and transmits this transmodulated signal, typically along with standard terrestrial signals, over a communication channel, such as a cable or a wireless network, to a number of individual receiver units within an MDU. The receiver units demodulate the received transmodulated signal and provide user-specified channels to processing or display units, e.g., video displays, television sets, audio systems, computers, etc. The receiver units also send requests for user-selected channels to the transmodulator which uses these requests to select Which of the portions of the broadband signal will be transmodulated.

According to another aspect of the present invention, a signal distribution system adapted to receive a composite signal having a multiplicity of transponder signals therein includes a transmodulator that transmodulates a selected one of the transponder signals from a first modulation scheme to a second modulation scheme to produce a transmodulated signal and a transmitter that transmits the transmodulated signal over a communication channel to a plurality of individual receivers. A receiver receives a request signal from each of the plurality of individual receivers and a controller selects the selected transponder signal in response to the request signals.

According to another aspect of the present invention, a signal distribution system for distributing a composite signal having a plurality of individual program multiplex signals therein over a communication channel to a number of individual receivers includes a main receiver that receives the composite signal and a multiplicity of transmodulator channels coupled to the main receiver. Each of the multiplicity of transmodulator channels, preferably numbering less than the number of individual program multiplex signals, transmodulates a different one of the plurality of individual program multiplex signals from a first modulation scheme to a second modulation scheme to produce one of a multiplicity of transmodulated signals. A combiner combines the multiplicity of transmodulated signals at different carrier frequency bands to produce a combined signal and a transmitter transmits the combined signal over the communication channel to the individual receivers. The signal distribution system also includes a request receiver that receives a request signal from each of the individual receivers and a controller coupled to the request receiver that controls which of the plurality of individual program multiplex signals each of the multiplicity of transmodulator channels is to transmodulate.

Moreover, the signal distribution system generates an information signal, known as side data, which may include channel set-up information, frequency index set-up information, etc. This information signal is used by the receiver to select a requested signal from the plurality of individual program multiplex signals.

The signal distribution system may include a second receiver adapted to receive a terrestrial signal while the combiner may combine the multiplicity of transmodulated signals with the terrestrial signal to produce the combined signal. Furthermore, a reception device coupled to the communication channel at one of the individual receivers may include a receiver that receives the combined signal, a demodulator that demodulates a portion of the received combined signal and an individual transmitter that transmits one of the request signals to the transmodulator indicating one of the plurality of program multiplex signals to be transmodulated. If desired, the transmodulator channels may transmodulate between a quadrature phase shift keying (QPSK) modulation scheme and a quadrature amplitude modulation (QAM) scheme, such as a 128-QAM scheme.

According to a still further aspect of the present invention, a method of distributing a subset of a plurality of individual signals associated with a composite signal to multiple individual receivers includes the steps of receiving the composite signal, receiving a request signal from each of the individual receivers and choosing the subset of the plurality of the individual signals to be distributed based on the

received request signals. Each of the subset of the plurality of the individual signals is transmodulated from a first modulation scheme to a second modulation scheme and is transmitted over a communication channel to the individual receivers.

BRIEF DESCRIPTION OF THE DRAWINGS

FIG. **1** is a block and partial-schematic diagram of the signal distribution system according to the present invention;

FIG. **2** is a frequency distribution chart illustrating representative options for transmitting received signals along with existing cable and/or off-air signals over a cable network;

FIG. **3** is a block diagram of an embodiment of the transmodulator of FIG. **1** according to the present invention;

FIG. **4** is a block diagram illustrating the satellite decoder of the transmodulator of FIG. **3**;

FIG. **5** is a data chart illustrating the output of the data packetizer of FIG. **3**;

FIG. **6** is a block diagram illustrating an embodiment of the cable encoder of the transmodulator of FIG. **3**; and

FIG. **7** is a block diagram of an IRD associated with one of the receiver units of FIG. **1**.

DESCRIPTION OF THE PREFERRED EMBODIMENTS

By the way of example only, the signal distribution system of the present invention is described herein as redistributing a broadband Ku-band satellite signal (comprising up to 32, QPSK-modulated transponder signals transmitted from one or more satellites at a carrier frequency band centered around approximately 12.45 GHz) to receiver units within an MDU. It is understood however, that the signal distribution system of the present invention can be used to redistribute any other type of satellite or land-based wireless signal. The term program multiplex (PM) signal is used herein to describe any single or multiplex of purely visual (such as video), purely audio, or purely data signals as well as a signal comprising any combination of audio, visual, data or other signals including, for example, television signals, digital data signals, etc.

Referring now to FIG. **1**, a signal distribution system **10** according to the present invention is illustrated for use at a local site having one or more MDUs and/or other buildings therein. A local site is considered to be any geographic area of relatively small proportion such as, for example, a subdivision, a city block, etc., containing one or more buildings or structures capable of having a plurality of individual receiving units therein. An MDU may be any type of multiple dwelling unit including, for example, an apartment, townhome, or condominium complex, a hotel/motel, an office building, a recreational or sports facility, a cluster of single family homes, a multi-use building and/or any other type of building or structure in which multiple signal receivers may be located.

The signal distribution system **10** includes a main signal receiver **14** disposed on, for example, the roof of an MDU or any other location capable of receiving a signal transmitted by a satellite or other signal source. The signal receiver **14** is preferably in the form of a 24-inch diameter parabolic dish antenna pointed towards, for example, satellites that transmit a Ku-band or other broadband, QPSK-modulated PM composite signal. A two-channel LNB **16** associated with the dish antenna **14** receives the modulated satellite signal reflected from the dish antenna **14**. Each of the channels of the LNB **16** filters either the RHCP or the LHCP component of the received signal and mixes this filtered signal down to an intermediate frequency band, for example, the portion of L-band between 950 MHz and 1450 MHz. The LNB **16** amplifies and provides the 500 MHz, L-band signals associated with each of the RHCP and LHCP components of the downlink signal to a transmodulator **20** via lines **22** and **24**, respectively. Other methods for providing the received QPSK input signals to the transmodulator **20** may also be used.

The transmodulator **20** remodulates or transmodulates a subset of the signals received from the LNB **16** using an output modulation technique that, preferably, reduces the bandwidth of the signals received from the LNB **16** from two 500 MHz bands (i.e., a total of 1000 MHz) to any lower bandwidth. This reduction in bandwidth may be accomplished by utilizing a more aggressive encoding scheme with appropriate error detection and correction codes and/or by remodulating less than all of the received transponder signals associated with the composite signal. The transmodulator **20** then places the transmodulated, reduced-in-bandwidth signal having less than all of the received transponder signals on a cable plant or cable network **26** within an MDU for distribution to a number of IRDs **30**, **32**, **34**, **36**, **38** and **40** associated with individual receiver units spread throughout the MDU. The transmodulator **20** may instead, or in addition, distribute the transmodulated signals over wire or via any wireless communication channel (including, for example, microwave and optical systems) to head-ends at any other MDUs or local sites or portions thereof. Of course, the transmodulator **20** may also distribute the transmodulated signals directly to IRDs using any desired wireless communication channel.

In order to determine which of the received satellite transponder signals should be transmodulated at any particular time, the transmodulator **20** receives and decodes requests for particular channels or satellite signals from each of the IRDs **30**–**40** that are active, determines from these requests which of the set of satellite or transponder signals to transmodulate and then tunes to and transmodulates only those selected satellite or transponder signals. The transmodulator sends the updated frequency index to the receiver via side data. If no transponders are available to fulfill the request, the transmodulator sends an error message to the receiver indicating that no transponder is available.

The transmodulator **20** may also receive signals from a cable provider, a local off-air antenna **44**, and/or any other desired signal source such as those that locally generate A-V channels (e.g., security camera channels, data networks, or informational channels) using any standard receiving mechanism such as an antenna, modem or cable connection, and places these signals on the cable network **26** for distribution to the IRDs **30**–**40**. These other signals, referred to hereinafter as terrestrial signals, may comprise any cable, satellite or off-air signal including, for example, standard CATV, UHF, VHF, FM radio signals and/or locally generated signals such as security camera or bulletin board channels. The terrestrial signals may be summed or added together in a summing network **46** (which may comprise any standard signal summer) and provided to the transmodulator **20** via a cable line **48**, or may be provided separately to the transmodulator **20**. The transmodulator **20** may pass the received terrestrial signals to the cable network **26** at the carrier frequencies at which the terrestrial signals are received, or the transmodulator **20** may shift some or all of the terrestrial signals in frequency to use the available

frequency spectra of the cable network **26** more efficiently. Where input terrestrial signals are provided in base-band, suitable RF modulators may be used.

Preferably, the transmodulator **20** transmodulates selected signals within the two 500 MHz-wide QPSK-modulated downlink signals into 128-QAM-modulated signals, wherein each such transmodulated signal is 6 MHz-wide. The transmodulator **20** may then place each of the transmodulated 6 MHz-wide, 128-QAM-modulated signals on the cable network **26** at any unused or desired carrier frequency bands while, simultaneously, sending the terrestrial signals over the cable network **26** at any other desired carrier frequency bands. Alternatively, the transmodulator **20** may use any other desired modulation technique to remodulate selected ones of the received satellite signals. In fact, in some cases in which only a few of the selected signals are being distributed, the transmodulator may not need to remodulate the selected signals but may, instead, send these signals over the cable network **26** at the received modulation scheme. As noted above, the transmodulator **20** may provide the transmodulated signals and/or the terrestrial signals to the IRDs **30–40** over any wireless network, if so desired.

Each of the IRDs **30–40** receives the selected ones of the QAM-modulated, 6 MHz-wide signals along with the terrestrial signals from the cable network **26** (or wireless channel) and demodulates a user-selected one of these signals. Each of the IRDs **30–40** then provides the demodulated user-selected signal(s) to an output device or processor, such as a television set (not shown), for display or processing thereby. When a user at one of the IRDs **30–40** requests to receive a particular satellite signal or transmodulator signal, the IRD first checks the current channel assignments to see if the requested signal is available. If so, the IRD demodulates the requested signal and, if not, the IRD sends a request to the transmodulator **20** to tune to, transmodulate and transmit the requested signal over the cable network **26**. This request may be sent via the cable network **26**, via a different wire network provided in the MDU, via any desired wireless network or via any other communication channel. If desired, the request signal may be sent to the transmodulator using the well known Multi-Media Cable Network System (MCNS) protocol, which provides communication over the same cable as the video signals. The MCNS protocol typically utilizes the range from 5 to 42 MHz and enables multiple receivers to communicate to the same transmodulator.

Referring now to FIG. **2**, representative methods of combining the transmodulated transponder signals along with terrestrial signals on the cable network **26** are illustrated. The left-most column of FIG. **2** illustrates a previously known method of placing QPSK-modulated signals along with terrestrial signals on a cable network. According to this scheme, all existing terrestrial signals (including cable TV signals) are distributed at, for example, VHF and UHF carrier frequencies below 950 MHz while one of the 500 MHz-wide QPSK-modulated signals (associated with either the LHCP or the RHCP component of the satellite signal) is placed directly on the cable network at the unused band between about 950 MHz and 1450 MHz. A major problem with this configuration is that only the RHCP or the LHCP transponder signals can be placed on a 1450 MHz capable cable network at any given time which, in turn, prevents IRDs within an MDU from decoding or receiving channels associated with the other of the LHCP or the RHCP transponder signals. While this problem can be overcome by running two cable lines throughout an MDU or by utilizing a high frequency cable plant capable of approximately 2 GHz or greater bandwidth, these solutions require additional equipment and expense and are not adaptable to most existing cable plants now in use. Furthermore, the signals provided at the 950 MHz to 1450 MHz band can be severely degraded by the cable plant due to the poor high frequency propagation properties of many existing cable plants, especially older cable plants.

The three right-most columns of FIG. **2** illustrate methods of combining selected ones of the 32, 6 MHz-wide, 128-QAM-modulated signals with existing terrestrial signals on the cable network **26**. The second left-most column of FIG. **2** illustrates a configuration in which the transmodulator **20** places one or more of the 32, 6 MHz-wide, 128-QAM-modulated signals within a band between about 804 MHz and 996 MHz directly above the common CATV channels. This configuration can be used with higher grade cable networks that propagate signals at up to 1000 MHz without significant degradation.

The third left-most column of FIG. **2** illustrates a configuration in which the transmodulator **20** places one or more of the 32, 6 MHz-wide, 128-QAM-modulated signals at a frequency band between approximately 222 MHz and 414 MHz between the CATV or other signals at the VHF and UHF bands. In this case, the transmodulator **20** may need to select which terrestrial (e.g., CATV) signals should be placed in the available portions of the UHF band above about 450 MHz and in the available portions of the VHF band below about 200 MHz and may need to shift some or all of the chosen terrestrial signals to those bands before placing the transmodulated signals on the cable network **26**. This frequency distribution technique is useful in lower quality cable systems that propagate signals at frequencies up to about 550 or perhaps 750 MHz without significant degradation.

The right-most column of FIG. **2** illustrates a configuration in which the transmodulator **20** places groups of selected ones of the 32, 6 MHz-wide, 128-QAM-modulated signals at any number of different spaced-apart frequency bands within the available cable network spectra. In particular, the transmodulator **20** may provide any number. (less than, for example, 32) of the 6 MHz-wide transmodulated signals at any of the unused carrier frequency bands between 60–66 MHz, 82–88 MHz, 180–186 MHz, 192–198 MHz, 204–210 MHz, 470–554 MHz, and 560–704 MHz, as generally illustrated in FIG. **2**, while sending terrestrial signals at bands between 54–60 MHz, 66–82 MHz, 88–180 MHz, 186–192 MHz, 198–204 MHz, and 210–470 MHz. The transmodulator **20** may, however, place these or any other desired groupings of the selected transmodulated signals at any other desired locations within the available cable network spectra, including at frequency bands normally used by terrestrial signals, based at least in part on how the cable network is being used. In some cases, it may be necessary for the transmodulator **20** to eliminate or frequency-translate some or all of the received terrestrial signals to other frequency bands to avoid interference with the selected transmodulated signals.

Referring now to FIG. **3**, the transmodulator **20** includes bias tees **50** and **52** that receive the RHCP and LHCP QPSK-modulated satellite signals, respectively, at L-band from the LNB **16** (FIG. **1**). The bias tee **50** provides a 13 volt DC signal to the LNB channel associated with the RHCP satellite signals, while the bias tee **52** provides a 17 volt DC signal to the LNB channel associated with the LHCP satellite signal. These DC voltages provide power to the respective LNB circuitry and select the desired polarization state in

manners well known in the art. In this manner, standard LNBs configured to select polarization states based on the applied DC control voltage may be utilized. Other forms of LNBs permanently configured to operate in desired manners may alternatively be utilized, eliminating the need for the bias tees **50** and **52**.

The L-band RHCP and LHCP signals are each linked to a series of switches **53** associated with a set of transmodulator channels of the transmodulator **20**. Preferably, the number of transmodulator channels within the transmodulator **20** is chosen in conjunction with the number of receiver units or IRDs connected to the transmodulator **20**. Typically, the fewer number of IRDs, the fewer number of transmodulator channels that are necessary. Generally speaking, however, the transmodulator **20** will not require more channels than the number of IRDs being supported and, in fact, will typically require less channels because it is not likely that all of the simultaneously operating IRDs being supported by the transmodulator **20** will be tuned to different transponder signals at the same time. If desired, the number of transponder channels may be chosen using any desired statistical analysis, taking into account, for example, the number of supported IRDs, the likelihood that the IRDs will be used at the same time, the likelihood that different IRDs will be tuned to the same satellite transponder signal, etc. Of course, the transmodulator **20** may be designed to be easily upgraded to add more transmodulator channels if necessary.

In accordance with the present invention, the number of transmodulator channels is less than the number of transponder signals associated with the received satellite or other signal and, in a preferred embodiment, the transmodulator **20** includes up to, but less than, 32 transmodulator channels, each of which includes a switch **53**, a tuner **54**, a satellite decoder **56**, a packetizer **58**, a cable encoder **60**, and an upconverter **62**. Each transmodulator channel decodes and transmodulates one of the 32 received transponder signals associated with the downlink signal in essentially the same manner and, as a result, the operation of only one of the transmodulator channels will be described herein.

The tuner **54** of a transmodulator channel tunes to one of the transponder signals associated with either the RHCP or the LHCP signal within the L-band range between 950 and 1450 MHz provided through the switch **53**, while filtering out the other 15 transponder signals within that band, to produce a 24 MHz-wide, QPSK-modulated signal corresponding to a selected one of the 32 satellite transponder signals. If desired, the tuner **54** may shift the tuned 24 MHz-wide, QPSK-modulated signal down to baseband.

The satellite decoder **56** decodes the QPSK-modulated transponder signal in known manners to produce a digital signal having a stream of data packets of programmed-multiplexed data, i.e., a PM signal. In one present DTH system, the packets are 130 bytes in length while, in another common system, the packets are 188 bytes in length. The satellite decoder **56** also provides an indication of whether a non-recoverable error has occurred within each of the, for example, 130 byte data packets during transmission via the satellite, as will be described in more detail hereinafter. Thereafter, the packetizer **58**, which may comprise any specialized or general microprocessing circuitry, repacketizes the data packets into another chosen standard. In a particular example, 130 byte packets utilized in the DSS® system standard, may be repacketized into 188 byte digital video broadcasting (DVB) data packets. These 188 byte DVB data packets are then delivered to a standard DVB cable encoder **60** such as a Broadcom Corp. BCM3118 I.C. Of course, if the received satellite signals include 188 byte data packets, the packetizer **58** can be replaced with error detecting circuitry that detects if a transmission error has occurred during transmission from the satellite and encodes an error indication into the 188 byte data packets, such as within the Reed-Solomon error code associated with those packets. Thus, although a repacketizer is preferred in some systems, it should be understood that repacketization is optional, and that other packet sizes and network standards could alternatively be utilized.

The DVB cable encoder **60**, which may comprise any known DVB encoder module, modulates the received stream of 188 byte DVB data packets using, preferably, a 128-QAM modulation technique, to produce a 6 MHz-wide transmodulated signal including all of the audio-visual programs associated with one of the 32 original transponder signals. The 6 MHz-wide transmodulated signal developed by the cable encoder **60** is provided to an upconverter **62** which shifts the 6-MHz wide transmodulated signal to an intermediate frequency (IF), preferably comprising one of four different carrier IFs used by the transmodulator **20**. The upconverter **62** then provides the IF signal to one of a number of summers **64** associated with the transmodulator **20**.

In the configuration of FIG. **3**, each of the summers **64** receives an input from, for example, four of the upconverters **62**, each of which upconverts to a different one of the four carrier IFs. Each of the summers **64** combines the four received transmodulated signals to produce, for example, one of up to eight groups of four, 6 MHz-wide transmodulated signals. The summers **64** of FIG. **3** provide up to eight such groups of four, 6 MHz-wide signals to a variable frequency upconverter **66** which, in turn, upconverts each of the up to eight groups of four, 6 MHz-wide signals to a different carrier frequency band. A summer **68** then combines these upconverted transmodulated signals with each other and with any desired frequency-shifted or non-frequency-shifted terrestrial signals (delivered by a level shifter **70**) for propagation over the cable network **26** of FIG. **1**.

The level shifter **70** may receive signals from an off-air antenna, from a cable provider and/or from any other desired signal source (e.g., local security or data services) and pass these signals through to the summer **68** at their current carrier frequency, or may shift these signals to one or more different carrier frequencies for propagation over the cable network **26** using any standard frequency translation or mixer circuitry. Of course, if desired, the level shifter **70** may include circuitry similar to the above-described transmodulator channels and transmodulate one or more of the received terrestrial signals to any desired modulation scheme, such as a 128-QAM scheme, for transmission over the cable network **26**.

A transmodulator control unit **72**, which may be implemented in the form of a microprocessor or any other digital or analog controller, preferably controls the switches **53**, tuners **54**, the satellite decoders **56**, the packetizers **58**, the cable encoders **60**, the upconverters **62**, the variable frequency upconverter **66** and the level shifter **70** in any desired manner. To implement such control, however, the control unit **72** receives satellite signal requests from the IRDs **30–40** which are received, demodulated and decoded by a demodulator/decoder **73**. These satellite signal requests may be transmitted from the IRDs **30–40** over the cable network **26** at, for example, a dedicated frequency, over some other wire network or via any desired wireless network. The satellite signal requests may be digital or analog requests using any desired or known communication format, such as

MCNS. These requests may be sent from the IRDs **30–40** periodically to indicate to the control unit **72** which satellite transponder signals are being actively requested by the IRDs **30–40** or these requests may be sent when an IRD initially tries to tune to one of the satellite transponder signals.

Generally, the control unit **72** assimilates all of the satellite signal requests received from the IRDs **30–40**, determines which of the satellite signals or transponder signals must be decoded to satisfy these requests and controls a different one of the transmodulator channels to transmodulate each of the so-determined transponder signals for transmission over the cable network **26**. The control unit **72** may cause the selected transponder signals to be transmodulated by controlling the tuners **54** of different ones of the transmodulator channels to tune to a specific one of the selected transponder signals. The control unit **72** may assign the transmodulator channels to tune to different transponder signals on a first come, first serve basis, by determining which of the transponder signals have the highest number of active requests associated therewith or using any other desired technique.

If desired, the control unit **72** may provide a signal via side data to each of the IRDs **30–40** specifying which transponder signals are being transmodulated and transmitted over the cable network **26** and the frequencies at which the transmodulated transponder signals are located on the cable network **26**. Also, if desired, when the control unit **72** receives requests for more transponder signals than there are transmodulator channels, the control unit **72** may send a signal to one or more of the IRDs **30–40** indicating that the requested signal cannot be decoded at, the present time because all of the transmodulator channels are being used to transmodulate other transponder signals. This communication may be performed using the cable network **26** or using any other wire or wireless network.

The control unit **72** may control the frequencies used by the upconverters **62** and **66** and/or the level shifter **70** to control the carrier frequencies at which the transmodulated signals, as well as the terrestrial signals, are transmitted over the cable network **26**. In a preferred embodiment, the transmodulator control unit **72** automatically determines which frequencies to use as carrier frequencies for the selected ones of the 32, 6 MHz-wide transmodulated signals (or other transmodulated signals) developed by each of the transmodulator channels. In this preferred configuration, the transmodulator control unit **72** may include a signal detector (not shown) attached to the line **48** upon which the terrestrial signals are received. At start up or at any other desired time, the signal detector scrolls through or scans the frequency bands between about 54 MHz and 806 MHz (and higher bands if desired) and checks the power lever and/or tries to tune to standard channel locations to determine which channel locations are being used for terrestrial signals. Typically standard terrestrial channel locations are spaced 6 MHz apart. If the signal detector detects enough power and/or is able to tune to a standard channel, e.g., if it tunes to a carrier signal and gets a video sync code, the control unit **72** identifies that the band associated with that channel is being used by a terrestrial (e.g., CATV) signal. However, if the signal detector does not detect sufficient power and/or is unable to tune to any particular channel, the band associated with that channel is identified as an empty band and, therefore, as potentially available for use with one or more of the transmodulated signals. The control unit **72** may, instead, include any standard channel or frequency sniffer which locates the frequency bands used by the received terrestrial signals in any other desired manner.

After the control unit **72** identifies all of the empty or unused frequency bands, this information is preferably stored in non-volatile memory. Operator selection (e.g., by means of a keypad) may also be utilized to select or de-select frequency bands, either alone or in conjunction with an automated system.

The control unit **72** may then, in one embodiment, start at the lowest unoccupied band, determine if this band is wide enough to carry one or more, i.e., any desired number, of the transmodulated signals and, if so, identify that band for use by a specific one or more of the transmodulated signals by changing the output frequency of, for example, the upconverter **66** associated with those transmodulated signals. The control unit **72** may go as high as necessary in frequency to assign carrier frequencies to all of the transmodulated signals.

If the terrestrial signals are spread out throughout the available cable spectra in a manner which makes it impossible or difficult to find empty bands of sufficient predetermined width for all of the desired transmodulated signals, the control unit **72** and/or operator input may identify one or more of the terrestrial signals and/or the satellite channels to be eliminated (not provided over the system) or shifted in frequency to thereby produce sufficient regions of continuous spectrum for use by any desired subsets or groupings of the transmodulated signals. In the case in which one or more of the terrestrial signals or the satellite signals are eliminated, the control unit **72** preferably selects the one or more signals for elimination based on a predetermined priority criterion which may be, for example, input by a user or stored in a memory associated with the control unit **72**. The priority criterion may prioritize the satellite or terrestrial signals for elimination based on the channel or frequency at which these signals arrive at the transmodulator **20** or based on any other desired criteria.

A transmodulator control panel **74** is coupled to the control unit **72** and, preferably, includes signal strength measurement devices that indicate the relative strength of each of the satellite signals and/or each of the terrestrial signals input to the transmodulator **20**. The control panel **74** may also allow an operator to choose default frequency locations for each of the transmodulated and/or terrestrial signals and may include controls that permit an installer to select the carrier frequency bands for any number of the transmodulated and/or terrestrial signals. Of course, the transmodulator control panel **74** and the control unit **72** may perform any other desired functions with respect to the transmodulator **20**.

Referring now to FIG. **4**, the satellite decoders **56** of FIG. **3** are described in more detail. Each of the satellite decoders **56** may comprise any standard decoder used in decoding the satellite or other signal received by the main receiving antenna such as the DSS decoder manufactured by SGS Thomson, commonly referred to as the "Link I.C.," the Broadcom Corp. BCM4200 decoder chip, or decoder chips manufactured by LSI Logic and others. Generally, each satellite decoder **56** includes a QPSK demodulator **80** that demodulates the QPSK-modulated signal received from one of the tuners **54**. The QPSK demodulator **80** may use any known or desired technique to recognize the incoming QPSK symbols and convert each of these symbols into a soft decision presentation of a two bit pattern (e.g., six bits for each three bit soft decision) based on the phase and absolute magnitude of the symbol. The output of the QPSK demodulator **80** is a digital bit stream comprising a concatenated set of two bit patterns (i.e., the six bit soft decision representation of these patterns) corresponding to the received QPSK symbols.

Because satellite signals are typically convolutionally encoded before being transmitted via satellite (for error correction purposes), the satellite decoder **56** includes a convolutional decoder **82** that convolutionally decodes, using soft decisions if required, the received bit stream in any known manner to produce a stream of 147 byte packets having 146 bytes of interleaved data and one sync byte. A sync and de-interleaver **84** detects and strips the sync byte, and then de-interleaves the remaining 146 bytes to produce a stream of 146 byte data packets, each having 130 bytes of program-multiplexed (PM) data and 16 bytes of Reed-Solomon (R-S) error coding (which was added to the data packets before being transmitted via satellite).

An R-S decoder **88** provides error correction based on the **16** error coded bytes of each of the 146 byte data packets in any known and conventional manner to produce a stream of 130 byte error corrected PM data packets. The R-S decoder **88** also determines if a non-correctable error has occurred to the data within each of the 130 byte data packets and indicates, via a line **89**, whether each 130 byte data packet has correct data or, alternatively, has data which has been corrupted by an unrecoverable transmission error.

The packetizer **58** (FIG. **3**) receives the 130 byte data packets and the associated error indication and creates therefrom a 132 byte data packet, having 130 bytes of PM data, one sync byte and one, for example, R-S error code byte indicating whether the 130 bytes of data are error-free or whether they contain an uncorrected transmission error. The sync and/or error code bytes can also contain other necessary down-stream information such as command and/or channel configuration information.

The packetizer **58** then concatenates the stream of 132 byte data packets, counts off consecutive sets of 187 bytes to form 187 byte data packets, and adds, for example, a byte having an MPEG2 sync code and/or other downstream information such as command and channel configuration information for each of the selected transponder signals to the beginning of each of the 187 byte data packets to create a stream of 188 byte data packets. An illustrative stream of twelve such 188 byte data packets is illustrated in FIG. **5**, wherein the MPEG2 sync bytes are illustrated as "47" hexadecimal, the sync bytes associated with each of the 130 bytes of data are illustrated as "1D" hexadecimal and the R-S error code or error flag byte associated with each of the 130 bytes of data are illustrated as "94" hexadecimal for the "no error" condition and may be, for example, "95" hexadecimal (not shown) for the error condition. As will be evident from FIG. **5**, each of the 132 byte packets having 1 sync byte, 1 error flag byte and 130 bytes of program-multiplexed data can be fully contained within one 188 byte packet or can be split between two 188 byte packets for transmission over the cable network **26**. As will also be evident, the pattern of the twelve 188 byte packets of FIG. **5** repeats for every seventeen 130 byte packets.

The packetizer **58** delivers the stream of 188 byte data packets to an associated one of the cable encoders **60**. Although the packetizer **58** is described herein as converting from 130 to 188 byte data packets, the packetizer **58** could convert between data packets of any other number of bytes to accommodate other signal decoders, cable encoders, or data organization schemes as desired.

Referring now to FIG. **6**, the cable encoders **60** of FIG. **3** are described in more detail. Each cable encoder **60** may comprise any standard DVB cable encoder, such as a DVB encoder of the type manufactured by Broadcom Corp. (the BCM3033 I.C.) which, as is known in the art, operates on 188 byte data packets having 187 bytes of data and one sync byte. Each cable encoder **60** includes a scrambler **90**, which randomizes the bits/bytes within each of the 188 byte data packets, and an R-S encoder **92** which adds an R-S error code of, for example, 16 R-S parity bytes, to each of the scrambled 188 byte data packets. Thereafter, a standard interleaver **94** interleaves groups of the R-S encoded data packets for transmission error resistance purposes, as is generally known in the art. A byte to m-tuple encoder **96** splits up the interleaved data packets into consecutive sets of m bits for encoding using a QAM modulation technique. The value of m is a function of the level of QAM modulation being used and, specifically, the QAM modulation technique can be expressed as 2^m-QAM. Thus, for example, m equals seven in 128-QAM while m equals 4 in 16-QAM.

A differential encoder **98** differentially encodes the two most significant bits of each of the m-tuple bit packets using any commonly known differential encoding technique, as is commonly performed in QAM modulation. Next, a square-root raised cosine filter **100** provides a pulse shaping feature to the differentially encoded bit packets and delivers the shaped pulses to, for example, a 128-QAM modulator **102** which may comprise any standard QAM modulator that produces a 128-QAM modulated signal at the output thereof.

While the transmodulator **20** is described herein as including a packetizer **58** which repacketizes 130 byte data packets produced by a standard DSS satellite decoder **56** into standard 188 byte data packets used by systems following the DVB transmission standard to enable the use of known DSS satellite decoders and known DVB cable encoders, the transmodulator **20** could, instead, include circuitry specifically designed to encode the 130 byte data packets produced by the satellite decoder **56** in a manner similar to the DVB cable encoder, i.e., by scrambling, R-S encoding, interleaving, etc. the 130 byte data packets to produce the 128-QAM modulated signals.

Furthermore, while the signal distribution system **10** is described herein as using a 128-QAM modulator **102**, any other type of QAM modulator, such as an 8-QAM, 16-QAM, 32-QAM, 64-QAM or higher order QAM modulator can be used to encode the decoded satellite signal, with the choice being dependent on how much frequency spectrum is available on a particular cable system, on how noisy the cable network tends to be which, in turn, drives the level of error protection required and on how many transmodulated signals are being delivered to the receiver units. In general, the higher the order of QAM encoding, the less frequency spectrum will be necessary to transmit the desired number satellite transponder signals (or other signals) over a cable network. However, the higher the order of QAM modulation, the more the transmodulated signals will be susceptible to noise while being transmitted over a cable network. Likewise, different ones of the transmodulator channels of FIG. **3** may transmodulate the received PM signal, i.e., the tuned transponder signal, using different modulation schemes. For example, a first set of the transmodulator channels may remodulate PM signals using a 128-QAM modulation technique, while a second set of transmodulator channels may use a 32-QAM modulation technique, a 64-QAM modulation technique, and so on. The choice of the modulation technique for any particular transmodulator channel may depend on, for example, the data rate of the PM signal being received, as well as other factors.

Furthermore, as noted above, modulation techniques besides QAM can be used when transmodulating the decoded satellite signal. Other such modulation techniques

may include, for example, any high rate digital modulation techniques such as VSB (vestigial side band), including 8-VSB, 16-VSB etc., or QAM with trellis-coded modulation. Other modulation techniques which may be developed in the future could similarly be used without departing from the spirit and scope of the present invention. In general, the choice of a modulation technique will be driven by the reduction in bandwidth which must be accomplished by the modulation technique and by the noise susceptibility of the modulation technique. If a different modulation technique is used, however, it is understood that a different type of cable encoder will be necessary to properly transmodulate the desired transponder signals (or other received signals) for propagation over the cable network **26**.

Still further, the transmodulator **20** need not remodulate the received transponder signals but may, instead, shift selected ones of these signals to different frequencies for transmission over the cable network **26**. In this case, each transmodulator channel would need to include a tuner and a frequency shifter. Of course, this configuration only reduces the bandwidth used by the signals transmitted over the cable network **26** to the extent that it eliminates some of the received satellite transponder signals. Thus, the more received satellite transponder signals that are to be sent to the IRDs **30–40**, i.e., the more transmodulator channels there are, the less viable this option becomes.

Likewise, it is understood that signals other than QPSK modulated signals can be received at the main signal receiver **14** (or other receiver) and transmodulated for delivery over the cable network **26** using the concepts described herein. In this situation, the particulars of the transmodulator **20** will change based on the type of modulation, carrier frequencies and transmission formats associated with these different received signals. It is considered that the use of an 8-PSK (phase shift keying) modulation scheme for encoding the satellite signal and a 16-QAM or higher order QAM (32-QAM, 64-QAM etc.) scheme for encoding the cable signal may be one useful combination. It is also considered that the use of a 16-QAM scheme for encoding the satellite signal and a 32-QAM or higher order QAM scheme for encoding the cable signal may be another useful combination.

Referring now to FIG. **7**, the circuitry associated with each of the IRDs **30–40**, identified hereinafter as IRD **30**, is illustrated in block format. While the IRD **30** will be described herein as an IRD which decodes DSS signals, it will be understood by those skilled in the art that the IRD **30** may include any other standard circuitry that decodes any other type of modulated or encoded signals.

The IRD **30** may initially scan all the channels from, for example, low carrier frequencies to high carrier frequencies, to locate the frequency bands or channels used by the selected ones of the transmodulated signals and then assign channel numbers to these located signals based on a predetermined ordering scheme used by the transmodulator **20**. However, as noted above, the transmodulator **20** may actively signal the channel locations, ordering, frequency assignments, etc. of the transmodulated satellite signals and/or terrestrial signals via a communication channel (using side data) established over, for example, the cable network **26**. Such a communication channel may comprise a low-speed channel that uses uncoded bits of the sync and error code bytes within the, for example, 188 byte data packets, and may be used to deliver any desired information to the IRD **30** over time, i.e., using a large number of the 188 byte data packets.

The IRD **30** includes a controller **105** that receives satellite signal requests from a user and then sends requests to the transmodulator **20** via, for example, an MCNS interface **107** and the cable network **26**, to have the requested transponder signals transmodulated and transmitted to the IRD **30** via the cable network **26**. The controller **105** also receives and decodes information from the transmodulator **20** indicating the carrier frequencies, etc. of the transmodulated signals that are on the cable network **26**. When the controller **105** recognizes that a user-requested channel is being transmodulated and sent via the cable network **26**, the controller **105** controls a tuner **110**, connected to the cable network **26**, to tune to the frequency band associated with the requested signal. If necessary, the tuner **110** may include a down-converter which shifts higher frequency 6 MHz channels to lower frequencies commonly supported by standard tuners.

The tuned signal is provided to a decoder **112**, which may comprise a standard DVB cable decoder such as the BCM3118 decoder chip manufactured by Broadcom Corp. Generally, the decoder **112** includes a 128-QAM demodulator that demodulates the QAM transmodulated signal to produce a set of interleaved, R-S encoded data packets. A de-interleaver de-interleaves the data packets and, thereafter, an R-S decoder strips off the error coding and, to the extent possible, corrects errors resulting from transmission over the cable, to produce a stream of 188 byte data packets. Thereafter a descrambler descrambles each of the 188-byte data packets to remove the effects of the scrambler **90** of FIG. **6**. The DVB cable decoder **112** delivers the stream of 188 byte data packets, each having 187 bytes of data and one sync byte, to a packetizer **114** while, simultaneously, providing an indication of whether the data associated with each of the 188 byte data packets has experienced a non-recoverable error during transmission over the cable network **26**. This indication may be developed by the R-S decoder of the DVB decoder **112** and provided to the packetizer **114** via, for example, a line **115**.

The packetizer **114** strips off the sync byte of each of the 188 byte data packets to produce a stream of 187 byte data packets, concatenates the stream of 187 byte data packets and repacketizes the data stream into a stream of 132 byte data packets, each having 130 bytes of program-multiplexed data, one sync byte and one error code byte. Using the error indication produced by the DVB cable decoder **112** (on line **115**), the packetizer **114** determines if a non-recoverable error has occurred with respect to any of the 188 byte packets within which any portion of each 132 byte data packet was included. If so, the error code of the 132 byte data packet is changed to reflect that the 132 byte data packet contains corrupted data.

The output of the packetizer **14** is provided to a splitter **116** which strips the 130 bytes of program-multiplexed data from the 132 byte data packets using a smoothing buffer to minimize packet-to-packet delay variation or jitter and provides this data to a transport decoder **118**. The splitter **16** also decodes the error code associated with each of the 132 byte

data packets and indicates to the transport decoder **118** if the 130 bytes of program-multiplexed data at the input thereof have been corrupted during transmission via either the satellite or the cable.

The transport decoder **118**, which may comprise any standard transport decoder such as those associated with the DSS system, decodes the program-multiplexed data to produce a stream of digital data. If the presence of an uncorrected error is indicated for any data packet, the transport decoder **18** may use that information to begin known error concealment techniques to reduce the effects of the error when the final signal is, for example, displayed on a television screen. If, however, the error code associated with any particular 130 byte data packet indicates that no transmission error has occurred therein, the transport decoder **118** strips off all data which is not an actual part of the signal to produce a program-multiplexed signal having data associated with from approximately five to eight individual A-V programs, all in known manners.

The program multiplexed data is provided to a demultiplexer **120** which is also responsive to the controller **105**. The demultiplexer **120**, which may be any standard demultiplexer, extracts one of the five to eight A-V programs from the program multiplexed data signal and provides a data stream having data pertaining to the extracted program (as identified by the controller **105**) to a decoder having an MPEG video decoder **122**, an MPEG audio decoder **123** and/or a data processor **124**.

The MPEG video decoder **122**, which may be any standard MPEG2 video decoder commonly known in the art, operates to produce a digital video signal from the received bit stream and provides this digital signal to an NTSC encoder **125**. The NTSC encoder **125**, which may be any standard encoder, converts the received digital signal into an analog NTSC video signal and provides this signal to a television set **126** for display on the television screen, as is commonly known in the art. If desired, the NTSC encoder **125** may also receive signals from the controller **105** for display on the T.V. **126**. Such signals may indicate to a user that, for example, a requested channel is not presently available on the system because the transmodulator **20** cannot assign a transmodulator channel to the satellite transponder signal associated with the requested channel at the present time. Of course, the controller **105** may have similar connections to the MPEG audio decoder **123**, the MPEG video decoder **122** and/or the data processor **124**. Other standard video encoders including, for example, PAL, SECAM, etc., may also be used alone or in combination.

The MPEG audio decoder **123**, which may be any standard audio decoder commonly known in the art, produces a digital audio signal from the received bit stream, and provides this audio bit stream to a D/A converter **127** which, in turn, provides an analog audio signal to the television set **126** for use in conjunction with the video signal developed by the NTSC encoder **125**. The data processor **124** performs independent data processing or data functions on data within the decoded signal. The data processor **124** may, for example, decode, display and/or run web pages, software programs, etc. delivered via the satellite communication channel. In addition or in the alternative, other video, audio and/or data signals may be processed or output in known manners. Likewise, terrestrial signals may be diplexed off of the cable network **26** and provided to a tuner associated with a user television, VCR, etc. for demodulation in manners known in the art.

While the present invention has been described with reference to specific examples, which are intended to be illustrative only, and not to be limiting of the invention, it will be apparent to those of ordinary skill in the art that changes, additions and/or deletions may be made to the disclosed embodiments without departing from the spirit and scope of the invention.

What is claimed is:

1. A signal distribution system adapted to receive a composite signal having a multiplicity of subportions therein that are modulated according to a first modulation scheme, the signal distribution system comprising:

a transmodulator that transmodulates a selected one of the subportions of the composite signal from the first modulation scheme to a second modulation scheme to produce a transmodulated signal;

a main transmitter that transmits the transmodulated signal over a communication channel in a manner capable of being received at a plurality of individual receivers;

a request receiver that receives a request signal from each of the plurality of individual receivers; and

a controller coupled to the transmodulator and to the request receiver that selects the selected one of the subportions from the multiplicity of subportions in response to the request signals.

2. The signal distribution system of claim **1**, wherein the transmodulator includes a tuner and wherein the controller controls the tuner to tune to a frequency band associated with the selected one of the subportions.

3. The signal distribution system of claim **1**, further including a second receiver adapted to receive a second signal and a combiner that combines the transmodulated signal with the second signal to produce a combined signal, and wherein the main transmitter transmits the combined signal over the communication channel to the plurality of individual receivers.

4. The signal distribution system of claim **1**, further including a reception device coupled to the communication channel at one of the plurality of individual receivers, wherein the reception device includes a further receiver that receives the transmodulated signal, a demodulator that demodulates the received transmodulated signal and an individual transmitter that transmits one of the request signals indicating a subportion to be transmodulated.

5. The signal distribution system of claim **1**, wherein the first modulation scheme is a quadrature phase shift keying (QPSK) modulation scheme and the second modulation scheme is a quadrature amplitude modulation (QAM) scheme and wherein the transmodulator includes a QPSK demodulator coupled to a QAM modulator.

6. The signal distribution system of claim **5**, wherein the QAM modulator comprises a 128-QAM modulator.

7. The signal distribution system of claim **1**, wherein the first modulation scheme is an 8-PSK (phase shift keying) modulation scheme and the second modulation scheme is a quadrature amplitude modulation (QAM) scheme of the order of 16 or higher, and wherein the transmodulator includes a PSK demodulator coupled to a QAM modulator.

8. The signal distribution system of claim 1, wherein the first modulation scheme is a 16-QAM (quadrature amplitude modulation) scheme and the second modulation scheme is a QAM scheme of the order of 32 or 64 or 256 or higher, and wherein the transmodulator includes a 16-QAM demodulator coupled to a 32-QAM or a 64-QAM or a 256-QAM or higher order QAM modulator.

9. A signal distribution system for distributing a composite signal having a plurality of individual program multiplex signals modulated according to a first modulation scheme therein over a communication channel in a manner capable of being received by individual receivers, the distribution system comprising:

a main receiver that receives the composite signal;

a multiplicity of transmodulator channels coupled to the main receiver, each of which transmodulates a different one of the plurality of individual program multiplex signals from the first modulation scheme to a second modulation scheme to produce one of a multiplicity of transmodulated signals;

a combiner coupled to the multiplicity of transmodulator channels that combines the multiplicity of transmodulated signals at different carrier frequency bands to produce a combined signal;

a main transmitter that transmits the combined signal over the communication channel in a manner capable of being received by each of the individual receivers;

a request signal receiver that receives a request signal from each of the individual receivers; and

a controller coupled to the request signal receiver that controls which of the plurality of individual program multiplex signals each of the multiplicity of transmodulator channels transmodulates.

10. The signal distribution system of claim 9, wherein the multiplicity of transmodulator channels is less than the plurality of individual program multiplex signals.

11. The signal distribution system of claim 9, wherein each of the transmodulator channels includes a tuner and wherein the controller controls the tuner of each of the transmodulator channels to tune to a frequency band associated with one of the plurality of individual program multiplex signals.

12. The signal distribution system of claim 9, further including a second receiver adapted to receive a second signal and wherein the combiner combines the multiplicity of transmodulated signals with the second signal to produce the combined signal.

13. The signal distribution system of claim 9, further including a reception device coupled to the communication channel at one of the individual receivers, wherein the reception device includes a further receiver that receives the combined signal, a demodulator that demodulates a portion of the received combined signal and an individual transmitter that transmits one of the request signals indicating one of the plurality of program multiplex signals to be transmodulated.

14. The signal distribution system of claim 9, wherein the main transmitter transmits the combined signal to the individual receivers over a cable and wherein the request signal receiver receives the request signals via a wire connection.

15. The signal distribution system of claim 9, wherein the main transmitter transmits the combined signal to the individual receivers over a cable and wherein the request signal receiver receives the request signals via a wireless channel.

16. The signal distribution system of claim 9, wherein the first modulation scheme is a quadrature phase shift keying (QPSK) modulation scheme and the second modulation scheme is a quadrature amplitude modulation (QAM) scheme and wherein each of the multiplicity of transmodulator channels includes a QPSK demodulator coupled to a QAM modulator.

17. The signal distribution system of claim 9, wherein each of the request signals includes a request for one of the plurality of individual program multiplex signals and wherein the controller includes means for controlling each of the multiplicity of transmodulator channels to transmodulate a different one of the requested individual program multiplex signals.

18. The signal distribution system of claim 17, wherein the controller includes means for selecting which of the plurality of individual program multiplex signals will be transmodulated when the number of requested individual program multiplex signals is greater than the number of the multiplicity of transmodulator channels.

19. The signal distribution system of claim 18, wherein the selecting means selects a particular multiplicity of individual program multiplex signals to be transmodulated based on the number of request signals received for each of the plurality of individual program multiplex signals.

20. A method of distributing a subset of a plurality of individual signals associated with a composite signal to multiple individual receivers, wherein the plurality of individual signals are modulated according to a first modulation scheme, the method comprising the steps of:

receiving the composite signal;

receiving a request signal from each of the individual receivers;

choosing the subset of the plurality of the individual signals based on the received request signals;

transmodulating each of the subset of the plurality of the individual signals from the first modulation scheme to a second modulation scheme to produce a combined transmodulated signal; and

transmitting the combined transmodulated signal over the communication channel in a manner capable of being received at the individual receivers.

21. The signal distribution method of claim 20, further including the steps of receiving a second signal and transmitting the second signal with the combined transmodulated signal to the individual receivers.

22. The signal distribution method of claim 20, wherein the first modulation scheme is a quadrature phase shift keying (QPSK) modulation scheme and the second modulation scheme is a quadrature amplitude modulation (QAM) scheme and wherein step of the transmodulating includes transmodulating each of the chosen subset of the plurality of individual signals from the QPSK modulation scheme to the QAM modulation scheme.

23. A signal distribution system for distributing a composite signal having a plurality of individual program multiplex signals therein over a communication channel in a manner capable of being received by individual receivers, the distribution system comprising:

a main receiver that receives the composite signal;

a multiplicity of tuner channels coupled to the main receiver, each of which tunes to a different one of the plurality of individual program multiplex signals to produce one of a multiplicity of tuned signals, wherein the multiplicity of tuned signals is less than the plurality of individual program multiplex signals;

a combiner coupled to the multiplicity of tuner channels that combines the multiplicity of tuned signals at different carrier frequency bands to produce a combined signal;

a transmitter that transmits the combined signal over the communication channel in a manner capable of being received by each of the individual receivers;

a request signal receiver that receives a request signal from each of the individual receivers; and

a controller coupled to the request signal receiver that controls the tuner channels to tune to a particular set of individual program multiplex signals based on the received request signals.

24. The signal distribution system of claim **23**, further including a second receiver adapted to receive a second signal and wherein the combiner combines the multiplicity of tuned signals with the second signal to produce the combined signal.

25. The signal distribution system of claim **23**, further including a reception device coupled to the communication channel at one of the plurality of individual receivers, wherein the reception device includes a further receiver that receives the combined signal, a demodulator that demodulates a portion of the received combined signal and an individual transmitter that transmits one of the request signals indicating one of the plurality of program multiplex signals.

* * * * *